H.V.A.C. LEGEND

EQUIPMENT ABBREVIATIONS:

AHU – AIR HANDLING UNIT
HP – HEAT PUMP OUTDOOR UNIT
EF – CEILING EXHAUST FAN
WFC – WALL FAN COIL UNIT

AIR DISTRIBUTION ABBREVIATIONS:

AD – AUTOMATIC DAMPER W/ ACTUATOR
CD – CEILING DIFFUSER (S.A.)
CR – CEILING RETURN AIR GRILLE
BV – BRICK VENT

SYMBOLS:

T – 7-DAY PROGRAMMABLE THERMOSTAT
S – WIRED REMOTE TEMPERATURE SENSOR
TC – 24 HR, 7-DAY PROGRAMMABLE TIME CLOCK
AD – AUTOMATIC DAMPER W/ ACTUATOR
MANUAL VOLUME DAMPER

H.V.A.C. DESIGN DATA

OUTDOOR DESIGN CONDITIONS				REMARKS
SUMMER		WINTER		
DB	MCWB	DB	RH	BASED ON 2021 ASHRAE FUNDAMENTALS FOR TALLAHASSEE NWS, FL AT RATE OF 0.4% COOLING, 99.6% HEATING, AND 0.4% DEHUMIDIFICATION.
96.2°F	76.2°F	26.5°F	---	
INDOOR DESIGN CONDITIONS				
SUMMER		WINTER		BASED ON ASHRAE STANDARD 55 FOR THERMAL ENVIRONMENTAL OCCUPANCY OF 80%.
DB	RH	DB	RH	
75°F	55%	70°F	35%	

GENERAL H.V.A.C. NOTES & SPECS:

1. RIGID RECTANGULAR DUCT SHALL BE GALVANIZED SHEET METAL FABRICATED PER LATEST SMACNA STANDARDS FOR LOW PRESSURE (<2.0" WG), SEAL CLASS A.
2. RIGID ROUND DUCT SHALL BE GALVANIZED SHEET METAL, SNAPLOCK SEAM PIPE & FITTINGS WITH SEAMS & JOINTS SELAED WITH DUCT SEALANT.
3. FLEXIBLE DUCT SHALL BE EQUAL TO HART & COOLEY F216 WITH INSTALLED R-VALUE OF 6.0. LENGTH SHALL NOT EXCEED 8'-0".
4. SIDE TAKEOFFS SHALL BE EQUAL TO CROWN 315-DSO (SADDLE TYPE) / 715-DSO (FLAT TYPE) WITH AN INTEGRAL MANUAL VOLUME DAMPER & 2" STAND-OFF.
5. PROVIDE DUCT CANVAS CONNECTIONS & VIBRATION ISOLATION FOR ALL AHU'S AS NECESSARY.
6. HVAC CONTRACTOR SHALL FIELD VERIFY CLEAR SPACE AVAILABLE, ROUTING PATH, AND CONFLICTS WITH STRUCTURE & OTHER TRADES.
7. HVAC CONTRACTOR SHALL INSTALL ALL EQUIPMENT, PIPING & DUCTWORK SUCH THAT MFG'S RECOMMENDED CLEARANCES ARE MET.
8. FOR HVAC EQUIPMENT 5-TONS OR LESS, REFRIGERANT PIPING SHALL BE TYPE "L" SOFT COPPER LINE-SETS WITH A MIN. OF 1/2" THICK CLOSED CELL U.V. & TEAR RESISTANT INSULATION.
9. PRIMARY CONDENSATE PIPING SHALL BE A MIN. OF 3/4"ø (WFC) & 1"ø (AHU) SCHED. 40 PVC PROPERLY TRAPPED & SLOPED TO HUB DRAIN ON MEZZANINE. INSULATE WITH 1/2" THICK CLOSED CELL INSULATION. AUXILIARY DRAIN LINE SHALL BE 3/4" SCHED. 40 PVC ALSO RUN TO HUB DRAIN ON MEZZANINE

DUCT INSULATION SPECS:

1. ALL S.A., R.A., O.A. RIGID DUCT AND BACKS OF GRD'S SHALL BE EXTERNALLY INSULATED WITH 2.2" THICK x 0.75 PCF DUCT WRAP EQUAL TO CERTAINTEED "SOFT-TOUCH R" WITH AN INSTALLED R-VALUE OF 6.0. INSULATION SHALL BE APPLIED WITH STAPLES & FSK TAPE.
2. AT CONTRACTOR'S DISCRETION, THE MIXED AIR PLENUM SHALL EITHER BE EXTERNALLY INSULATED AS STATED IN #1 ABOVE OR INTERNALLY LINED WITH 1" FIBER-GLASS DUCT LINER APPLIED WITH GLUE AND STICK PINS.

TEST & BALANCE SPECS:

1. HVAC CONTRACTOR, AS PART OF THEIR SUB-CONTRACT, SHALL PROVIDE AN INDEPENDENT TEST & BALANCE AGENCY CERTIFIED BY "AABC" OR "NEBB" TO PERFORM T&B TO WITHIN ±10% OF DESIGN VALUES. PROVIDE A CERTIFIED T&B REPORT UPON COMPLETION OF PROJECT.

CROSSOVER HEAT PUMP OUTDOOR UNIT SCHEDULE (HP)

TAG	BASIS OF DESIGN	MODEL	NOMINAL RATED CAPACITIES			COOLING EFFICIENCY (SEER2)	HEATING EFFICIENCY (HSPF2)	ELECTRICAL				NOTES
			TOTAL COOLING CAPACITY (BTU/hr)	SENS. COOLING CAPACITY (BTU/hr)	HEATING CAPACITY (BTU/hr)			V/Ph/Hz	MCA (A)	MOCP (A)	RFS (A)	
HP-1	CARRIER	37MURAQ60AA3	52,771	40,978	42,219	15.2	8.4	208-230/1/60	39	40	--	1,2,3,4,5,6,7
HP-2	CARRIER	37MURAQ60AA3	52,771	40,978	42,219	15.2	8.4	208-230/1/60	39	40	--	1,2,3,4,5,6,7
HP-3	CARRIER	37MURAQ18AA3	19,373	15,010	14,103	18.8	9.2	208-230/1/60	16	20	--	1,2,3,4,5,6,7
HP-4	CARRIER	37MURAQ48AA3	45,324	33,720	32,735	16.0	8.5	208-230/1/60	36	40	--	1,2,3,4,5,6,7

NOTES

1. NOMINAL COOLING CAPACITIES ARE BASED ON A EA.T OF 80°F DB/67°F WB & OUTDOOR AIR TEMPERATURE OF 95°F DB
2. NOMINAL HEATING CAPACITIES ARE BASED ON AN INDOOR AIR TEMPERATURE OF 70°F DB & OUTDOOR AIR TEMPERATURE OF 47°F DB
3. ACTUAL COOLING & HEATING CAPACITIES AS WELL AS ADDITIONAL FIELD CHARGE REQUIRED WILL BE BASED ON AS-BUILT REFRIGERANT LINE LENGHTS & NUMBER OF BENDS
4. UNIT SHALL BE ANCHORED TO CONCRETE PAD TO WITHSTAND WIND LOAD FOR LOCATION INSTALLED
5. FURNISH WITH SURGE PROTECTION DEVICE. COORDINATE WITH ELECTRICAL FOR INSTALLATION.
6. CONTRACTOR TO CONSULT MFG. FOR PROPER REFRIGERANT LINE SIZES BASED ON ACTUAL LINE LENGTHS & NO. OF BENDS.
7. MFG & MODEL INDICATED IN SCHEDULE IS BASIS OF DESIGN. EQUIVALENT ALTERNATES BY TRANE (MITSUBISHI), AND DAIKIN ARE ACCEPTABLE

CROSSOVER AIR HANDLING UNIT SCHEDULE (AHU)

TAG	BASIS OF DESIGN	MODEL	TYPE	SELECTED FAN SPEED	AIRFLOW AT SELECTED FAN SPEED (CFM)	TOTAL O.A. (CFM)	MAX. ESP SETTING (in.WC)	AUX. ELECTRIC HEAT (kW)	ELECTRICAL			NOTES
									V/Ph/Hz	MCA (A)	MOCP (A)	
AHU-1	CARRIER	45MUAAQ60XX3	HORIZONTAL AIR HANDLER	TURBO	1800	270	0.8	---	208-230/1/60	11	15	1,2,3,4,5
AHU-2	CARRIER	45MUAAQ60XX3	HORIZONTAL AIR HANDLER	TURBO	1800	270	0.8	---	208-230/1/60	4	15	1,2,3,5
AHU-3	CARRIER	45MUAAQ18XX3	HORIZONTAL AIR HANDLER	TURBO	600	90	0.8	---	208-230/1/60	11	15	1,2,3,5
AHU-4	CARRIER	45MUAAQ48XX3	HORIZONTAL AIR HANDLER	HIGH	1500	225	0.8	---	208-230/1/60	11	15	1,2,3,5

NOTES

1. UNIT IS HORIZONTAL AIRFLOW CONFIGURATION. PROVIDE WITH EZ-FILTER BASE & STANDARD SIZED 1" THICK, MERV-8 PLEATED FILTER.
2. PROVIDE A 2" DEEP GALVANIZED DRAIN PAN WITH FLOAT SWITCH
3. PROVIDE 24V TERMINAL STRIP, 7-DAY PROGRAMMABLE THERMOSTAT WITH DEHUMIDIFICATION, AND HARD-WIRED REMOTE TEMPERATURE SENSOR WHERE INDICATED ON PLANS
4. PROVIDE (1) PROGRAMMABLE WIRED CONTROLLER FOR SYSTEM SET-UP
5. MFG & MODEL INDICATED IN SCHEDULE IS BASIS OF DESIGN. EQUIVALENT ALTERNATES BY TRANE (MITSUBISHI), AND DAIKIN ARE ACCEPTABLE

DUCTLESS MINI-SPLIT SYSTEM HEAT PUMP UNIT SCHEDULE (HP/WFC)

TAG	BASIS OF DESIGN	MODEL OUTDOOR/INDOOR	INDOOR UNIT TYPE	AIRFLOW RANGE (CFM)	O.A. (CFM)	MAX. ESP SETTING (in.WC)	TOTAL COOLING CAPACITY (MBH)	SENSIBLE COOLING CAPACITY (MBH)	HEATING CAPACITY (MBH)	COOLING EFF. (SEER2)	HEATING EFF. (HSPF2)	ELECTRICAL				NOTES
												V/Ph/Hz	MCA HP/WFC (A)	MOCP (A)	RFS (A)	
HP/WFC-5	CARRIER	37MHRAQ12/45MHHAQ12	HIGH WALL	153-590	---	---	13,254	9,979	10,265	21.4	9.2	208-230/1/60	13/3	15	--	1,2,3,4,5

NOTES

1. INDOOR UNIT IS POWERED FROM OUTDOOR UNIT. COORDINATE FURNISHING & INSTALLATION OF POWER/COMMUNICATION CABLE WITH ELECTRICAL.
2. FURNISH WITH PROGRAMMABLE WIRED CONTROLLER
3. FURNISH HP WITH SURGE PROTECTION DEVICE. COORDINATE WITH ELECTRICAL FOR INSTALLATION.
4. CONTRACTOR TO CONSULT MFG. FOR PROPER REFRIGERANT LINE SIZES BASED ON ACTUAL LINE LENGTHS & NO. OF BENDS.
5. MFG & MODEL INDICATED IN SCHEDULE FOR BASIS OF DESIGN. EQUIVALENT ALTERNATES BY TRANE (MITSUBISHI), AND DAIKIN ARE ACCEPTABLE

EXHAUST FAN SCHEDULE

TAG	BASIS OF DESIGN	CFM	E.S.P.	SONES	MOTOR W/HP	PWR V-PH	MCA	MOP	CONTROL INTERLOCK	NOTES
EF-1	GREENHECK SP-A90	70	0.25	0.3	13W	115-1	0.2	15	LIGHTS/OCC.SENSOR	1,2,4
EF-2	GREENHECK SP-A70	50	0.25	0.3	12W	115-1	0.2	15	TIME CLOCK	1,3,4
EF-3	GREENHECK SP-A90	70	0.25	0.3	13W	115-1	0.2	15	TIME CLOCK	1,3,4
EF-4	GREENHECK SP-A125	100	0.25	0.6	18W	115-1	0.2	15	TIME CLOCK	1,3,4
EF-5,6	GREENHECK SP-A200	200	0.25	1.5	43W	115-1	0.6	15	LIGHTS/OCC.SENSOR	1,2,4

NOTES

1. PROVIDE WITH SOLID STATE SPEED CONTROLLER, ROUND DUCT CONNECTOR, B.D.D., ISOLATION KIT, AND ALUMINUM GRILLE.
2. CONTROLLED BY INTERLOCK WITH LIGHT OCCUPANCY SENSOR WITH TIME DELAY BY ELECTRICAL.
3. CONTORLLED BY 24-HR, 7-DAY PROGRAMMABLE, DIGITAL TIME CLOCK. EF TO RUN CONTINUOUS DURING OCCUPIED HRS.
4. MFG & MODEL INDICATED IN BASIS OF DESIGN. EQUIVALENT ALTERNATES BY COOK, PENN, AND S&P ARE ACCEPTABLE.

AIR DEVICE SCHEDULE

TAG	BASIS OF DESIGN	LOCATION	FUNCTION	SIZE (in.)		AIR PATTERN	DAMPER	COLOR FINISH	NOTES
				FACE	NECK				
CD4	GREENHECK CDD-6	CEILING	SUPPLY	24x24	SEE DWGS	4-WAY	---	WHITE	1,2,3,5
CG	GREENHECK RG-6	CEILING	RETURN	24x24	SEE DWGS	---	---	WHITE	1,2,3,5
BV	GREENHECK BVF	WALL	EXHAUST	---	12x7⅞	---	---	ARCH.	2,4,5

AIR DEVICE LEGEND

SEE DIFFUSER, REGISTER & GRILLE SCHEDULE ABOVE FOR FACE TYPE, EXACT MODEL, AIR PATTERN & FRAME

CD-"X" — BLOW PATTERN
"YYY" — REQUIRED AIR QUNATITY (CFM)
Z"ø — NECK / BRANCH DUCT SIZE

NOTES

1. PROVIDE ALL DEVICES WITH PROPER FRAME STYLE TO MATCH CEILING INDICATED BY PROJECT ARCHITECT; SEE RCP FOR REQUIREMENTS.
2. ALL AIR DEVICES SHALL BE ALUMINUM CONSTRUCTION IN WHITE FINISH UNLESS OTHERWISE NOTED.
3. PROVIDE WITH ROUND NECK OR SQUARE TO ROUND AS REQUIRED. NECK SIZE TO BE SAME AS BRANCH LINE SIZES INDICATED ON THE DWGS. SQUARE TO RND SIZES FOR LAY-IN CD SHALL BE AS FOLLOWS: 12"x12"-6"ø,8"ø & 15"x15"-10"ø. SQUARE TO RND SIZES FOR RG/TG SHALL BE AS FOLLOWS: 12"x12"-6"ø,8"ø, 16"x16"-10"ø thru 14"ø, AND 22"x22"-16"ø & UP
4. PROVIDE WITH FLANGE, SCREEN, AND COLOR FINISH BY ARCHITECT.
5. MFG & MODEL INDICATED IS BASIS OF DESIGN. EQUIVALENT ALTERNATES BY TITUS, PRICE, AND AIR VECTOR ARE ACCEPTABLE.

MISC. - MECHANICAL LEGEND/SCHEDULE/NOTES

SCALE: N.T.S.

IT IS THE RESPONSIBILITY OF THE CONTRACTOR TO VERIFY , CHECK AND COORDINATE ALL DIMENSIONS AND REQUIRED MINIMUM FLOOR ELEVATIONS. NOTIFY ARCHITECT/OWNER OF ANY DISCREPANCIES PRIOR TO COMMENCEMENT OF CONSTRUCTION .

THE USE OR REUSE OF THESE DRAWINGS WITHOUT WRITTEN APPROVAL BY ARCHITECT/OWNER IS PROHIBITED .

G. MARK PEPE ARCHITECT P.C.
307 W. ADAMS ST.
DOTHAN, AL
TELEPHONE NO.
(334) 712 9721
FAX NO.
(334) 699-2028
LICENSE #
AR92644

G MARK PEPE #AR92644

OWNER
MADISON USDA,LLC
423 DELAPERRIERE LOOP
JEFFERSON, GA
30549
TELEPHONE NO.
(706) 346-6958
EMAIL
PATRICK@MCSHANECAPITAL.COM

A NEW BUILDING FOR
USDA, QUINCY, FL
CORPORATE COURT, QUINCY, FL, 32351

ALL RIGHTS RESERVED. NO PART OF THIS DRAWING MAY BE REPRODUCED OR USED FOR ANY OTHER PURPOSE WITHOUT WRITTEN PERMISSION.
COPYRIGHT ©

REVISIONS

FOR PERMITS
–

FOR PRICING
–

CLIENT REVIEW
–

DRAWN BY:
JKC

REPLACE ALL PREVIOUS SHEETS WITH DATED SUFFIX WITH ABOVE REVISION DATE.

PLOT DATE
9-23-25

PROJ. DATE
2-1-25

SHEET
M0.1 of 4

SEQ. 24 OF 54

JOB No.
25020

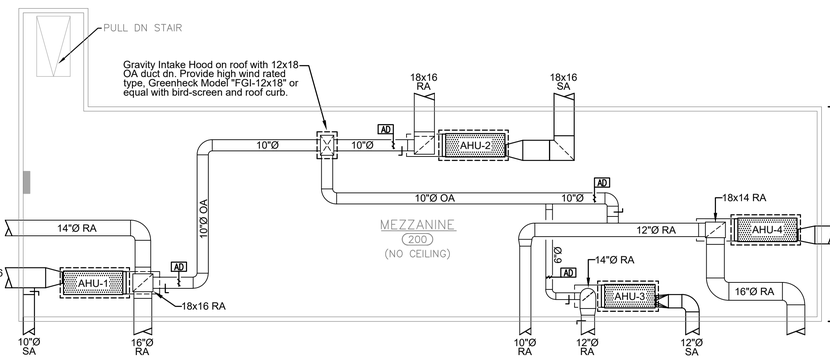

PLAN - Mechanical Mezzanine

SCALE: 3/16" = 1.0'

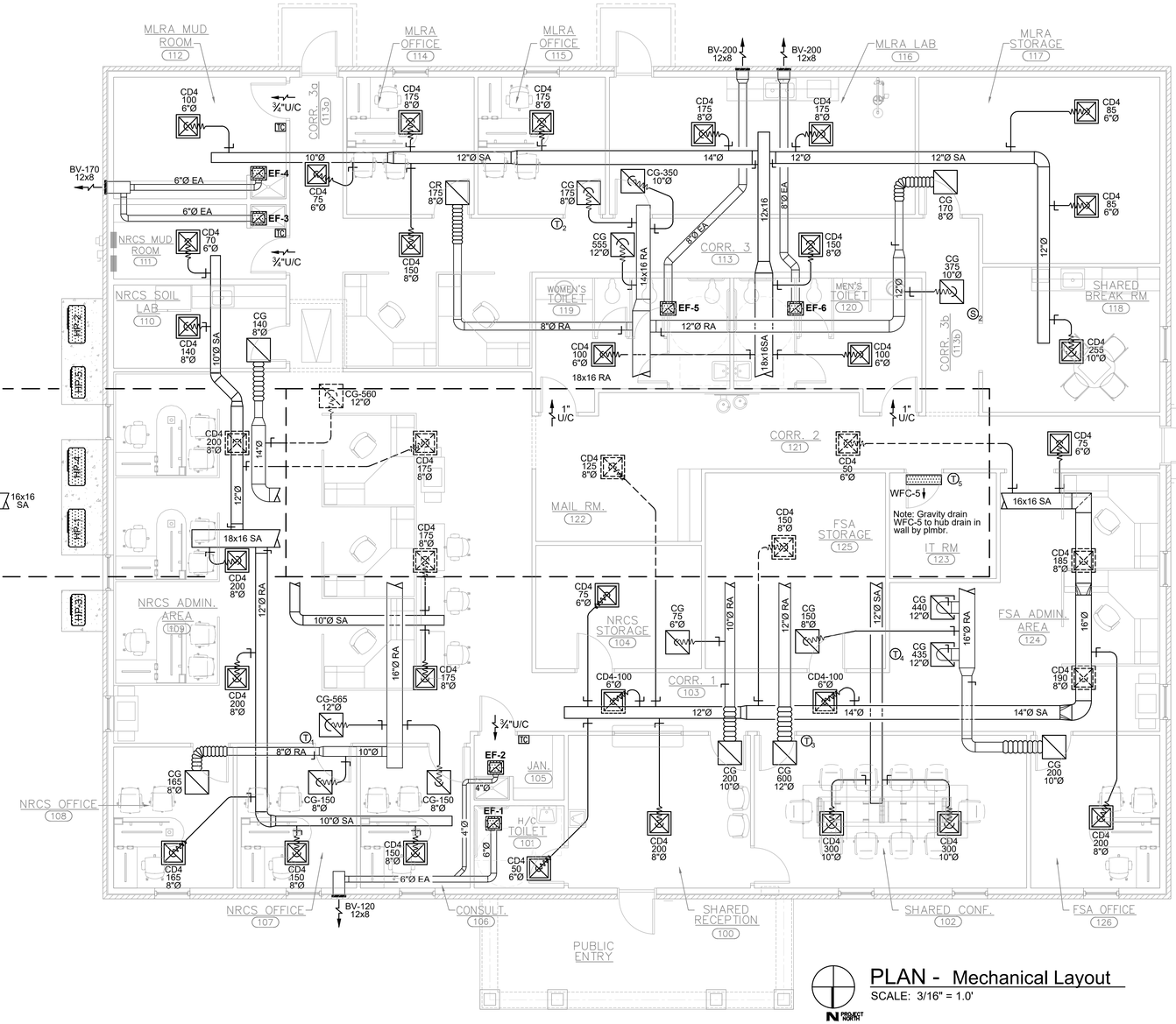

PLAN - Mechanical Layout

SCALE: 3/16" = 1.0'

G. MARK PEPE ARCHITECT P.C.
307 W. ADAMS ST.
DOTHAN, AL
TELEPHONE NO.
(334) 712 9721
FAX NO.
(334) 699-2028
LICENSE #
AR92644
G MARK PEPE #AR92644

OWNER
MADISON USDA,LLC
423 DELAPERRIERE LOOP
JEFFERSON, GA
30549
TELEPHONE NO.
(706) 346-6958
EMAIL
PATRICK@MCSHANECAPITAL.COM

A NEW BUILDING FOR
USDA, QUINCY, FL
CORPORATE COURT, QUINCY, FL, 32351

ALL RIGHTS RESERVED. NO PART OF THIS DESIGN MAY BE REPRODUCED IN ANY FORM OR BY ANY MEANS WITHOUT WRITTEN PERMISSION.
COPYRIGHT ©

REVISIONS

FOR PERMITS
–

FOR PRICING
–

CLIENT REVIEW
–

DRAWN BY:
JKC

REPLACE ALL PREVIOUS SHEETS WITH DATED SHEETS THAT BEAR REVISED DATE.

PLOT DATE
9-23-25

PROJ. DATE
2-1-25

SHEET
M1.1 of 15

SEQ. 24 OF 54

JOB No.
25020

IT IS THE RESPONSIBILITY OF THE CONTRACTOR TO VERIFY , CHECK AND COORDINATE ALL DIMENSIONS AND REQUIRED MINIMUM FLOOR ELEVATIONS. NOTIFY ARCHITECT/OWNER OF ANY DISCREPANCIES PRIOR TO COMMENCEMENT OF CONSTRUCTION .

THE USE OR REUSE OF THESE DRAWINGS WITHOUT WRITTEN APPROVAL BY ARCHITECT/OWNER IS PROHIBITED .

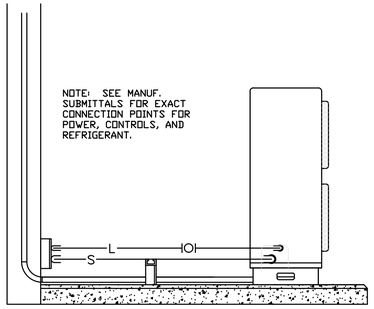

NOTES:

1. ALL HP & DHP UNITS SHALL BE ANCHORED TO CONCRETE PAD TO WITHSTAND 120 MPH WIND RATING.

OUTDOOR UNIT DETAIL (HP & DHP)

NOT TO SCALE

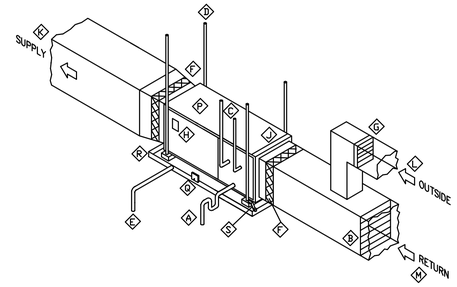

A. INSTALL P-TRAP AT INSULATED CONDENSATE DRAIN WITH CLEANOUT; ROUTE TO DRY-WELL OR SANITARY LINE DRAWINGS

B. BALANCING DAMPER

C. ROUTE REFRIGERANT LINES TO MATCHING HP OR AC UNIT; SEE DRAWINGS & PIPING SCHEMATIC FOR REQUIREMENTS.

D. AHU TO BE MOUNTED ON UNISTRUIT STEEL SUPPORTS FROM ROOF STRUCTURE WITH THREADED RODS & WAFFLE PAD TYPE VIBRATION ISOLATORS;

E. ROUTE 3/4" PAN DRAIN TO OUTSIDE AREA IN COMPLIANCE WITH LOCAL CODES.

F. FLEXIBLE DUCT CONNECTOR.

G. BALANCING DAMPER & BACKDRAFT DAMPER.

H. UL APPROVED BREAKER OR DISCONNECT FOR FAN & HEATER IN COMPLIANCE WITH NEC CODE & LOCAL REQUIREMENTS.

J. AIR FILTER & RACK; SEE SPEC'S FOR ADDITIONAL INFORMATION & REQUIREMENTS.

K. SUPPLY AIR DUCT.

L. EXTERNAL INSULATED OUTSIDE AIR DUCT.

M. BUILDING RETURN AIR DUCT.

P. AIR HANDLING UNIT; SEE SCHEDULES & DRAWINGS FOR ADDITIONAL REQUIREMENTS.

Q. FLOAT TYPE SWITCH IN DRAIN PAN WITH CONNECTION TO AHU LOW VOLTAGE HOT WIRE FOR SAFETY.

R. INSTALL 2" DEEP GALVANIZED AUX. DRAIN PAN UNDER UNIT.

S. METAL ANGLE SUPPORTS FOR AUX. DRAIN PAN AT EACH CORNER; PROVIDE ADDITIONAL SUPPORTS TO ASSURE PROPER PAN STRENGTH & DRAINAGE.

HORIZONTAL AIR HANDLER UNIT DETAIL (AHU)

NOT TO SCALE

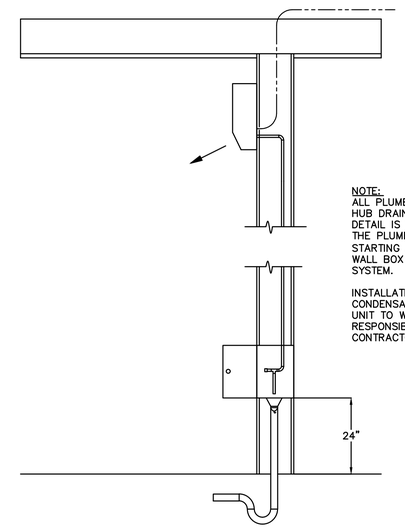

NOTE:
ALL PLUMBING FOR CONDENSATE HUB DRAINS SHOWN ON THIS DETAIL IS THE RESPONSIBILITY OF THE PLUMBING CONTRACTOR, STARTING AT (AND INCLUDING) WALL BOX THROUGH THE SANITARY SYSTEM.

INSTALLATION OF INSULATED CONDENSATE LINE FROM HVAC UNIT TO WALL BOX IS THE RESPONSIBILITY OF THE HVAC CONTRACTOR.

WALL-MOUNT MINI-SPLIT UNIT DETAIL (WFC-5)

NOT TO SCALE

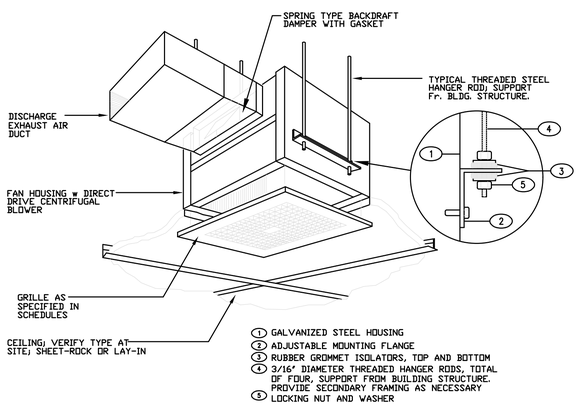

1. GALVANIZED STEEL HOUSING
2. ADJUSTABLE MOUNTING FLANGE
3. RUBBER GROMMET ISOLATORS, TOP AND BOTTOM
4. 3/16" DIAMETER THREADED HANGER RODS, TOTAL OF FOUR, SUPPORT FROM BUILDING STRUCTURE. PROVIDE SECONDARY FRAMING AS NECESSARY
5. LOCKING NUT AND WASHER

CEILING EXHAUST FAN DETAIL (EF)

NOT TO SCALE

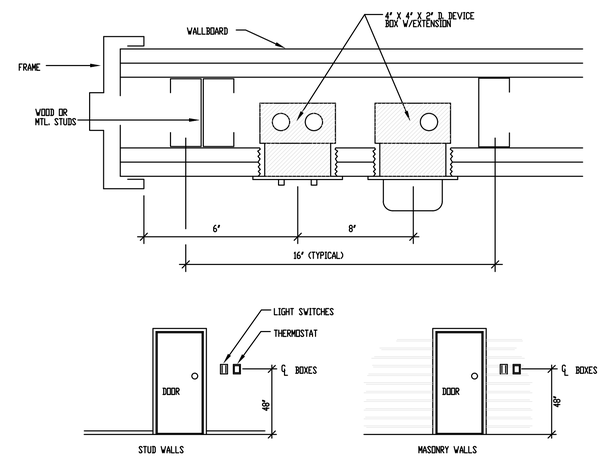

THERMOSTAT MOUNTING DETAIL

NOT TO SCALE

TECH - MISC. MECHANICAL DETAILS

SCALE: N.T.S.

IT IS THE RESPONSIBILITY OF THE CONTRACTOR TO VERIFY , CHECK AND COORDINATE ALL DIMENSIONS AND REQUIRED MINIMUM FLOOR ELEVATIONS. NOTIFY ARCHITECT/OWNER OF ANY DISCREPANCIES PRIOR TO COMMENCEMENT OF CONSTRUCTION .

THE USE OR REUSE OF THESE DRAWINGS WITHOUT WRITTEN APPROVAL BY ARCHITECT/OWNER IS PROHIBITED .

G. MARK PEPE ARCHITECT P.C.
307 W. ADAMS ST.
DOTHAN, AL
TELEPHONE NO.
(334) 712 9721
FAX NO.
(334) 699-2028
LICENSE #
AR92644

G MARK PEPE #AR92644

OWNER
MADISON USDA,LLC
423 DELAPERRIERE LOOP
JEFFERSON, GA 30549
TELEPHONE NO.
(706) 346-6958
EMAIL
PATRICK@MCSHANECAPITAL.COM

A NEW BUILDING FOR
USDA, QUINCY, FL
CORPORATE COURT, QUINCY, FL, 32351

ALL RIGHTS RESERVED. NO PART OF THIS DOCUMENT MAY BE REPRODUCED IN ANY FORM OR BY ANY MEANS WITHOUT WRITTEN PERMISSION.
COPYRIGHT

REVISIONS

FOR PERMITS
–

FOR PRICING
–

CLIENT REVIEW
–

DRAWN BY:
JKC

REPLACE ALL PRICING SHEETS WITH THE REVISED SHEET BEARING THIS DATE

PLOT DATE
9-23-25

PROJ. DATE
2-1-25

SHEET
M2.1 of 4

SEQ. 24 OF 54

JOB No.
25020

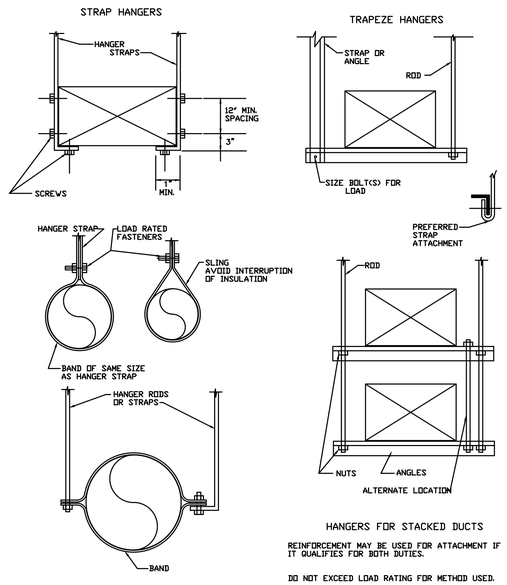

DUCT HANGER DETAILS

NOT TO SCALE

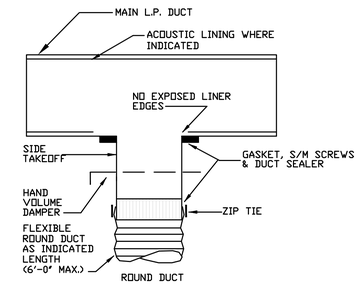

BRANCH DUCT TAKEOFF DETAIL

NOT TO SCALE

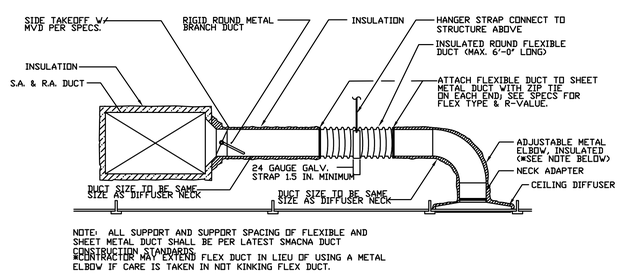

S.A. & R.A. BRANCH RUN-OUT DETAIL

NOT TO SCALE

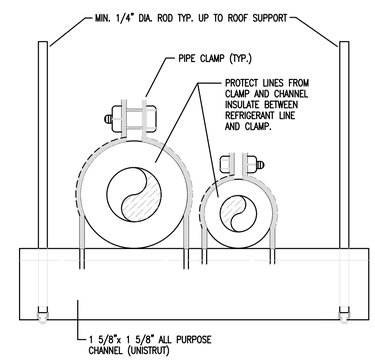

PIPE HANGER SUPPORT DETAIL

NOT TO SCALE

TECH - MISC. MECHANICAL DETAILS

SCALE: N.T.S.

IT IS THE RESPONSIBILITY OF THE CONTRACTOR TO VERIFY , CHECK AND COORDINATE ALL DIMENSIONS AND REQUIRED MINIMUM FLOOR ELEVATIONS. NOTIFY ARCHITECT/OWNER OF ANY DISCREPANCIES PRIOR TO COMMENCEMENT OF CONSTRUCTION .

THE USE OR REUSE OF THESE DRAWINGS WITHOUT WRITTEN APPROVAL BY ARCHITECT/OWNER IS PROHIBITED .

G. MARK PEPE ARCHITECT P.C.
307 W. ADAMS ST. DOTHAN, AL
TELEPHONE NO. (334) 712 9721
FAX NO. (334) 699-2028
LICENSE # AR92644
G MARK PEPE #AR92644

OWNER
MADISON USDA,LLC
423 DELAPERRIERE LOOP JEFFERSON, GA 30549
TELEPHONE NO. (706) 346-6958
EMAIL PATRICK@MCSHANECAPITAL.COM

A NEW BUILDING FOR USDA, QUINCY, FL
CORPORATE COURT, QUINCY, FL, 32351

ALL RIGHTS RESERVED. NO PART OF THIS DRAWING MAY BE REPRODUCED OR USED FROM IN ANY MEANS WITHOUT WRITTEN PERMISSION.
COPYRIGHT

REVISIONS

FOR PERMITS
–

FOR PRICING
–

CLIENT REVIEW
–

DRAWN BY: JKC

REPLACE ALL PRICING SHEETS WITH NEW REVISED SHEETS WHEN REVISED

PLOT DATE 9-23-25

PROJ. DATE 2-1-25

SHEET M2.2 of 4

SEQ. 24 OF 54

JOB No. 25020