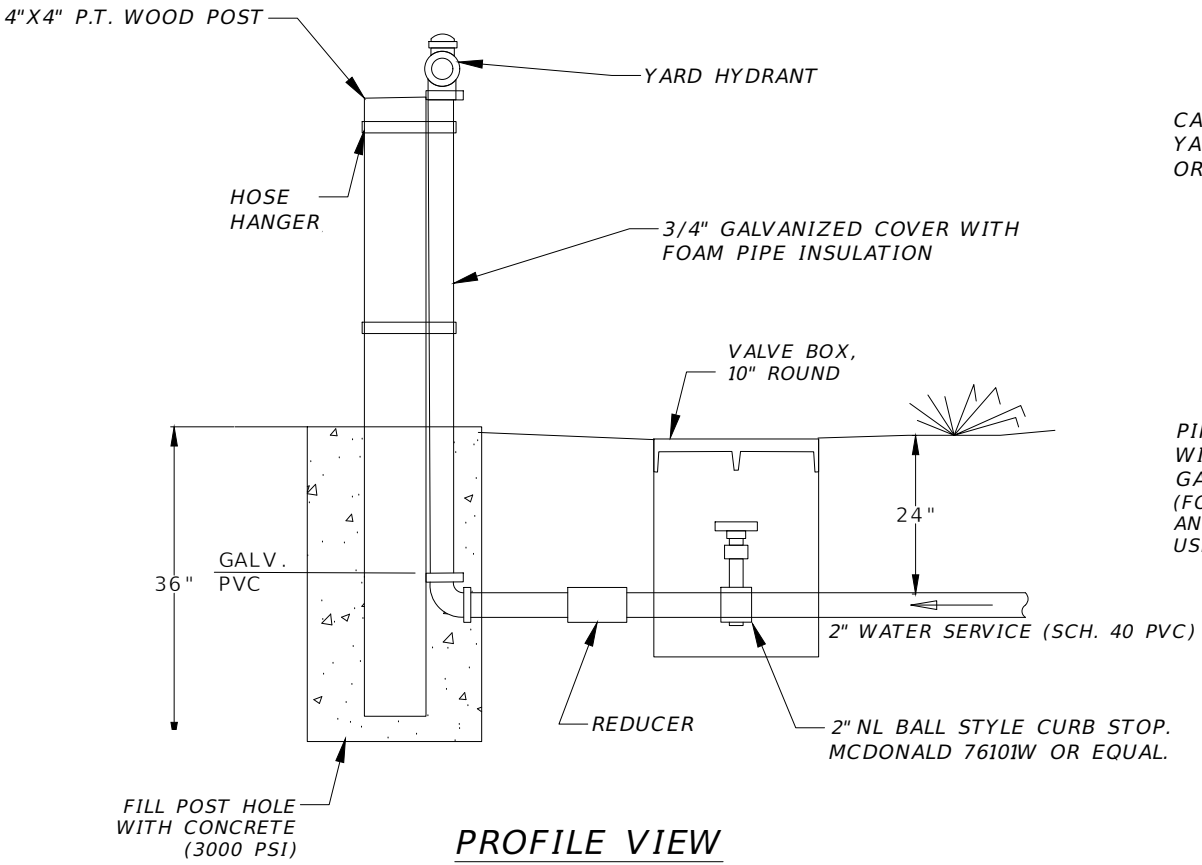


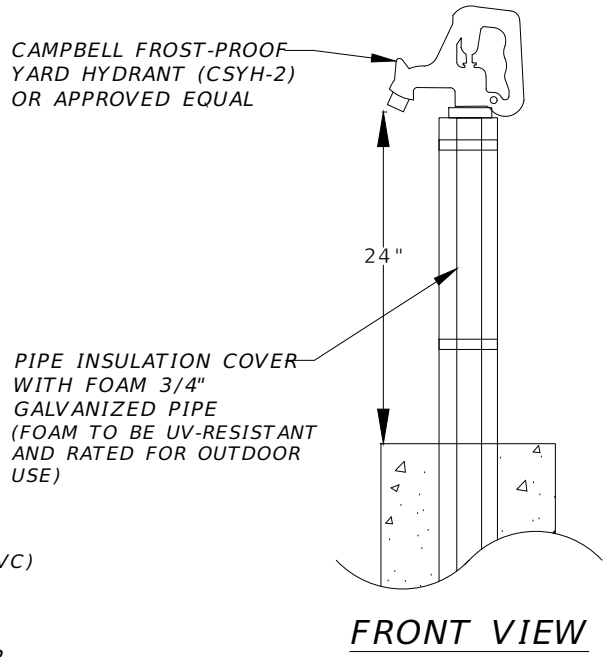


# FREEZE PROOF HYDRANT DETAIL

N.T.S.