THE LINE SHOWN ABOVE IS EXACTLY ONE HORIZONTAL INCH ON ORIGINAL ARCHITECT'S DRAWINGS

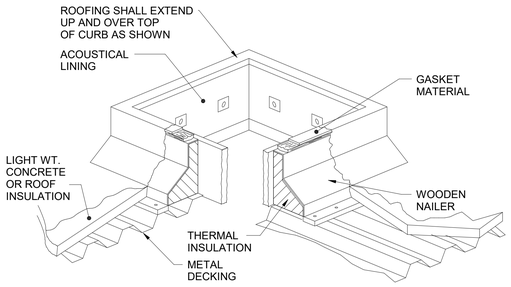

NOTES:

1. CURB HEIGHT ON UP-SLOPE SIDE SHALL BE AS SET FORTH IN MECH. SPECS. SECURE CURB TO BUILDING STRUCTURE WITH SHEET LAG BOLTS, OR OTHER METHODS CONSISTENT WITH ROOF STRUCTURE.
2. COORDINATE FASTENING SPACING WITH LOCAL WIND LOADS.

ROOF CURB ON METAL DECK DETAIL — 1
No Scale

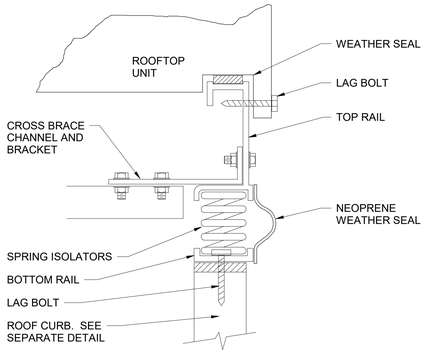

KINETICS MODEL KSR ISOLATION BASE SHALL BE INSTALLED IN STRICT ACCORDANCE WITH THE MANUFACTURER'S RECOMMENDATIONS.

INSTALL WIND RESTRAINTS (NOT SHOWN HERE) PER MANUFACTURER'S RECOMMENDATIONS TO WITHSTAND WIND LOAD AS INDICATED ON STRUCTURAL DRAWINGS.

ROOFTOP UNIT VIBRATION ISOLATION BASE — 2
No Scale

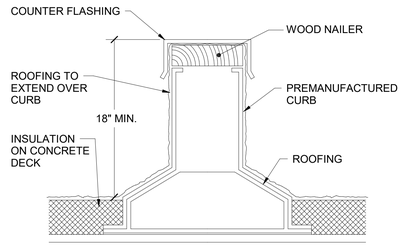

NOTES:

1. SECURE CURB TO ROOF WITH SHEET METAL SCREWS OR LAG BOLTS OR FIELD WELD CONSISTENT WITH ROOF STRUCTURE.
2. COORDINATE FASTENING SPACING WITH LOCAL WIND LOADS.
3. DELEGATED DESIGN AND SPACING SHALL BE COMPLIANT WITH RISK CATEGORY IV.

EQUIPMENT SUPPORT CURB — 3
No Scale

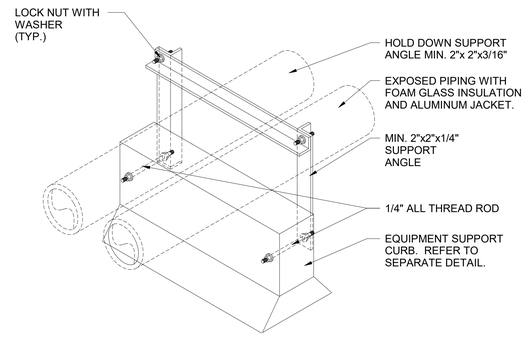

DELEGATED DESIGN AND SPACING SHALL BE COMPLIANT WITH LOCAL WIND REQUIREMENTS AND RISK CATEGORY IV.

PIPE SUPPORT ON ROOF DETAIL — 4
No Scale

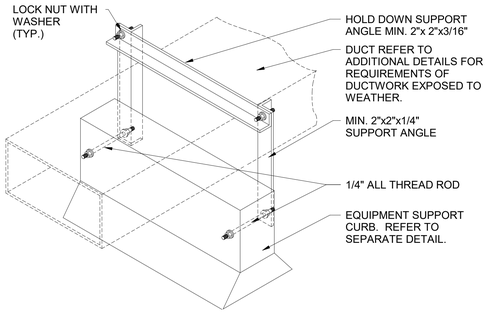

DELEGATED DESIGN AND SPACING SHALL BE COMPLIANT WITH LOCAL WIND REQUIREMENTS AND RISK CATEGORY IV.

DUCT SUPPORT ON ROOF DETAIL — 5
No Scale

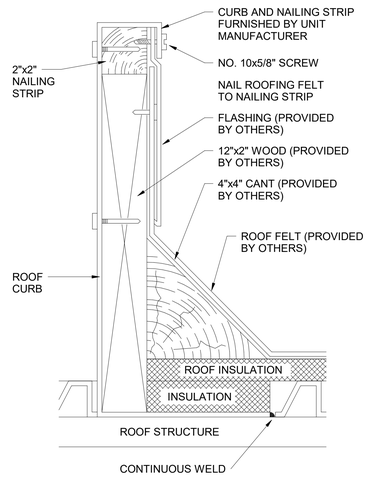

ROOFTOP UNIT CURB DETAIL — 6
No Scale

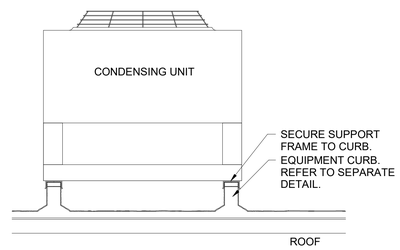

CONDENSING UNIT ON ROOF — 7
No Scale

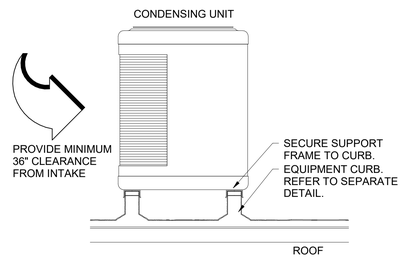

CONDENSING UNIT ON ROOF — 8
No Scale

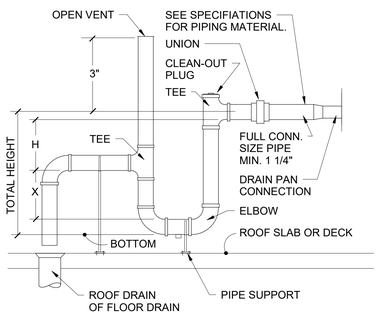

NOTE:
SLOPE DRAIN LINE MINIMUM OF 1/8" PER FOOT TO ROOF RECEPTOR.
TOTAL HEIGHT OF TRAP= X+H+ (1 1/2 x PIPE DIAMETER)

FOR DRAW THRU UNITS

X= MIN. 1/2 H (PREFERRED X=H)
H= NEGATIVE STATIC PRESSURE +1"

CONDENSATE DRAIN TRAP — 9
No Scale

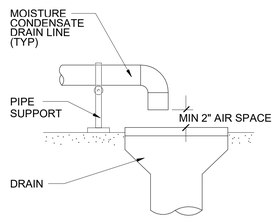

TERMINATION DETAIL OF MOISTURE CONDENSATE LINE — 10
No Scale

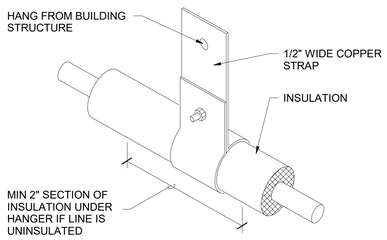

DETAIL FOR REFRIGERANT LINE HANGER — 11
No Scale

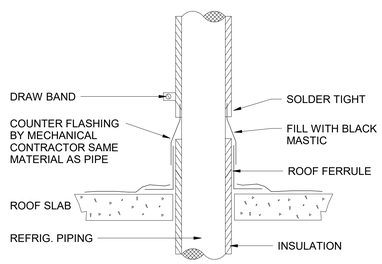

INSUL. REFRIG. PIPING THRU ROOF — 12
No Scale

ENVIRONMENTS FOR HEALTH ARCHITECTURE
e4h
817.228.1917 801 Cherry St. Ste. 500, Fort Worth, TX 76102
888.781.8441 e4harchitecture.com

© 2025 E4H: Environments For Health, LLC

exalt health

RYAN

ICT
I.C. Thomasson Associates, Inc.
A Salas O'Brien Company
2950 Kraft Drive
Nashville, TN 37204
PHONE 615-346-3400
https://www.ictthomasson.com/
ICT Project No. 2545-02546

FIRM CERTIFICATE OF AUTHORIZATION: CA-1276

ELECTRICAL ENGINEER
FLORIDA REGISTRATION:
JOSHUA R. CARTWRIGHT, P.E. #71893

MECHANICAL ENGINEER
FLORIDA REGISTRATION:
ZACHARY N. McCOY, P.E. #93060

EXALT HEALTH
40 BED REHAB HOSPITAL - PANAMA CITY BEACH
2851 HWY 77
PANAMA CITY, FLORIDA 32405

PROJECT: H002125

Δ	DATE	DESCRIPTION

NOT FOR CONSTRUCTION

ORIG SUBMISSION: 02/13/26
CURRENT:

SHEET TITLE AND NUMBER:

M4.01

MECHANICAL - DETAILS