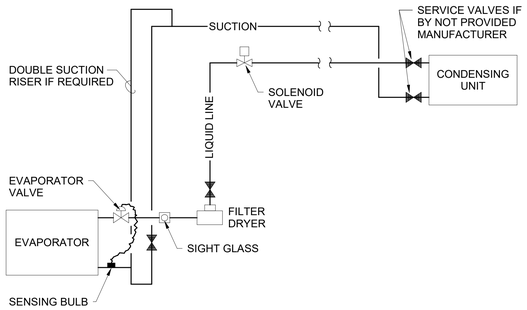

REFRIGERANT PIPING SCHEMATIC
No Scale

1

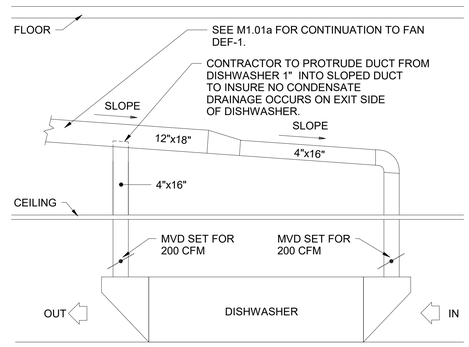

DISHWASHER EXHAUST DETAIL
No Scale

2

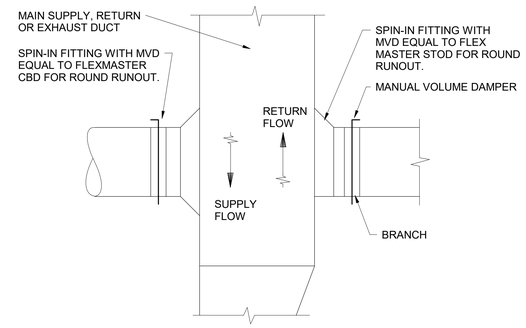

LOW PRESSURE ROUND BRANCH DUCT RUNOUT
No Scale

3

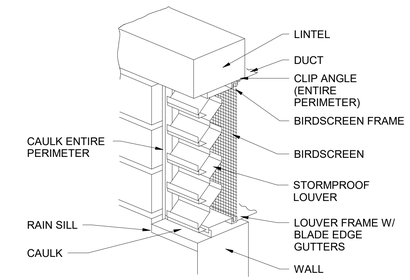

ALL LOUVERS SHALL BE NOA RATED.

TYPICAL HVAC WALL LOUVER
No Scale

4

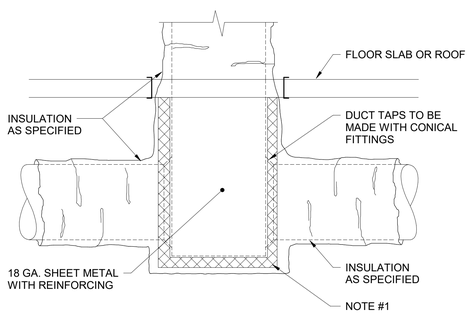

NOTES:

1. PROVIDE 1 LAYER OF 1" THICK KINETICS TYPE "PC-410 GBD" SOUND BARRIER WRAP.

BOTTOM OF RISER DUCT DROP WITH TAPS ON BOTH SIDES
No Scale

5

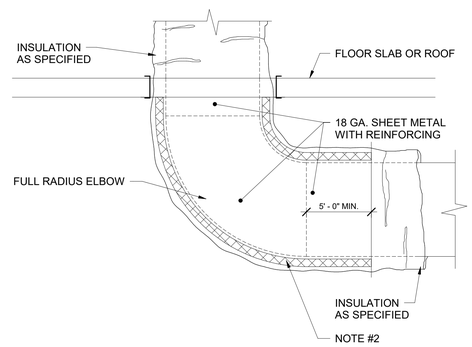

NOTES:

1. CONTRACTOR TO PROVIDE FULL RADIUS ELBOW WHERE CLEARANCE WILL ALLOW. IF SPACE REQUIRES MITERED ELBOW, PROVIDE WITH DOUBLE THICKNESS TURNING VANES.
2. PROVIDE 1 LAYER OF 1" THICK KINETICS TYPE "PC-410 GBD" SOUND BARRIER WRAP.

BOTTOM OF RISER DUCT DROP WITH 90º ELBOW
No Scale

6

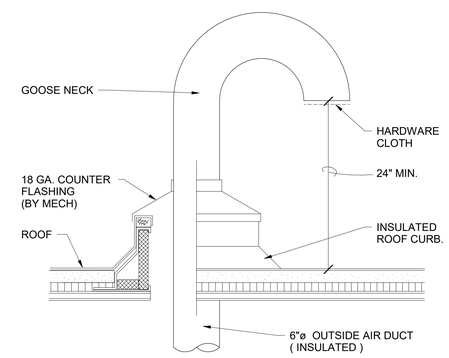

OUTSIDE AIR INTAKE DETAIL
No Scale

7

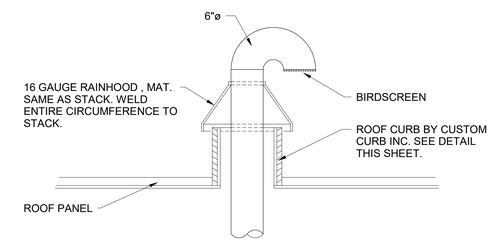

GOOSE NECK EXHAUST
No Scale

8

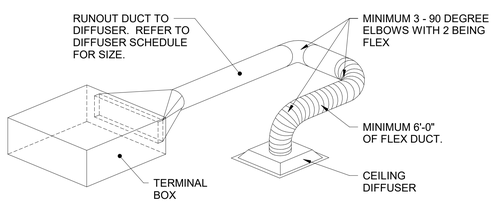

NOTES:

1. 90 DEGREE ELBOWS IN FLEX DUCT TO HAVE NOT LESS THAN ONE DUCT DIAMETER CENTERLINE RADIUS.

BOX SERVING ONE DIFFUSER DETAIL
No Scale

9

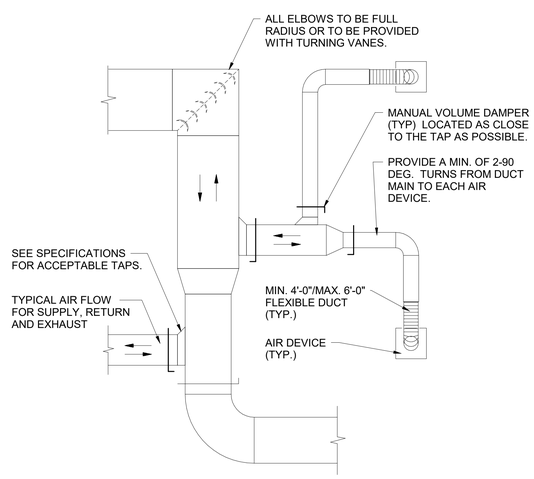

TYPICAL LOW PRESSURE SUPPLY, RETURN AND EXHAUST DUCT DETAIL
No Scale

10

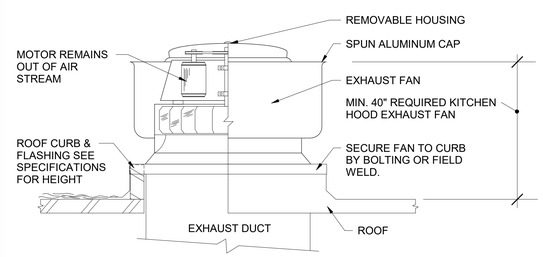

NOTE:

1. PROVIDE RUBBER VIBRATION ISOLATORS TO PREVENT MOTOR AND BEARING NOISE FROM TRANSMITTING TO THE FAN HOUSING.
2. ROUTE POWER LEADS TO FAN INSIDE CORNER OF CURB.
3. BELT DRIVEN CENTRIFUGAL EXHAUST FAN SHOWN. DETAIL IS SIMILAR FOR DIRECT DRIVE CENTRIFUGAL EXHAUST FAN.
4. SUPPORT CURB TO BE PERMANENTLY ATTACHED TO BUILDING STRUCTURE BY BOLTING OR WELDING.

UPBLAST KITCHEN HOOD EXHAUST FAN
No Scale

11

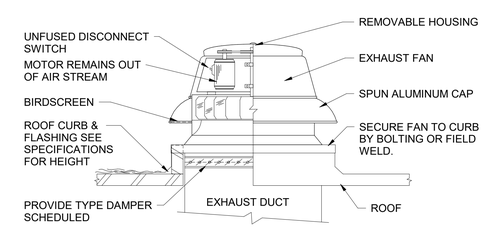

NOTES:

1. PROVIDE RUBBER VIBRATION ISOLATORS TO PREVENT MOTOR AND BEARING NOISE FROM TRANSMITTING TO THE FAN HOUSING.
2. ROUTE POWER LEADS TO FAN INSIDE CORNER OF CURB.
3. BELT DRIVEN CENTRIFUGAL EXHAUST FAN SHOWN. DETAIL IS SIMILAR FOR DIRECT DRIVE CENTRIFUGAL EXHAUST FAN.
4. SUPPORT CURB TO BE PERMANENTLY ATTACHED TO BUILDING STRUCTURE BY BOLTING OR WELDING.

CENTRIFUGAL EXHAUST FAN
No Scale

12

ENVIRONMENTS FOR HEALTH ARCHITECTURE
e4h
888.781.8441 817.226.1917 801 Cherry St. Ste. 500, Fort Worth, TX 76102 e4harchitecture.com

© 2025 E4H - Environments For Health, LLC

exalt health

RYAN

ICT
I.C. Thomasson Associates, Inc.
A Salas O'Brien Company
2950 Kraft Drive
Nashville, TN 37204
PHONE 615-346-3400
https://www.ictthomasson.com/
ICT Project No. 2545-02546

FIRM CERTIFICATE OF AUTHORIZATION: CA-1276

ELECTRICAL ENGINEER
FLORIDA REGISTRATION:
JOSHUA R. CARTWRIGHT, P.E. #71893

MECHANICAL ENGINEER
FLORIDA REGISTRATION:
ZACHARY N. McCOY, P.E. #93060

EXALT HEALTH
40 BED REHAB HOSPITAL - PANAMA CITY BEACH
2851 HWY 77
PANAMA CITY, FLORIDA 32405

PROJECT: H002125

Δ	DATE	DESCRIPTION

NOT FOR CONSTRUCTION

ORIG SUBMISSION: 02/13/26
CURRENT:

SHEET TITLE AND NUMBER:

M4.02

MECHANICAL - DETAILS

THE LINE SHOWN ABOVE IS EXACTLY ONE INCH LONG AT FULL SCALE