THE LINE SHOWN ABOVE IS EXACTLY ONE INCH LONG AT 30 SCALE ORIGINAL PLANS SIZE

INPUT/OUTPUT SUMMARY

AIR HANDLING UNIT RTU-1 RTU-2 RTU-3

	TAG	INPUTS – ANALOG – MEASURED								INPUTS – ANALOG – CALC.				INPUTS – DIGITAL									OUTPUTS – DIGITAL				OUTPUTS – ANALOG				SYSTEM FEATURES – ALARMS						SYSTEM FEATURES – PROGRAMS						
		TEMPERATURE	PRESSURE	HUMIDITY (RH)	AIR FLOW	AIR QUALITY	KW	DDC GATEWAY	VALVE POSITION	CURRENT SENSOR (AMPS)	KWH	ENTHALPY	RUN TIME	EFFICIENCY	AIR FLOW (CFM)	STATUS (DIFF. PRESS.)	STATUS (CURRENT SWITCH)	SMOKE	LOW TEMP.	AIR FLOW	END SWITCH	FIRE ALARM	PRESSURE	ON/OFF	OFF-AUTO-ON	OFF-HIGH-LOW	OPEN-CLOSE	DAMPER POSI.	VALVE POSI.	SET POINT ADJ.	4-20 mA	HI ANALOG	LOW ANALOG	HI BINARY	LOW BINARY	PROOF	MANUAL RESET	AUTO RESET	TIME SCHEDULING	DEMAND LIMITING	START/STOP OPTIM.	ENTHALPY OPTIM.	SMOKE CONTROL	TREND	ALARM INSTRUCTION
O.A. TEMPERATURE	TT-OAT	●																																									●	
LOW STATIC	SPS-RLO		●																				●												●		●						●	●
RETURN AIR HUMIDITY	HT-RAH			●																																							●	
RETURN AIR TEMPERATURE	TT-RAT	●																																									●	
RETURN FAN VFD	VFD-RAF						●	●																	●						●												●	●
RETURN FAN STATUS	STS-RAF																●																			●		●						●	●
RETURN AIR FLOW	AM-RA				●			●																																			●	
RELIEF DAMPER	D-REL																				●							●								●		●						●	●
RETURN DAMPER	D-RET																				●							●								●		●						●	●
MIN. O.A. DAMPER	D-MIN																				●						●									●		●						●	●
ECONOMIZER DAMPER	D-EOA																				●							●								●		●						●	●
PRE-FILTER STATUS	DPS-FIL															●																		●				●						●	●
MIXED AIR TEMPERATURE	TT-MAT	●																															●					●						●	●
DX COOLING CONTROL	CU									●			●											●	●					●	●					●	●	●						●	●
SUPPLY FAN VFD	VFD-SAF						●	●																	●						●													●	●
SUPPLY FAN STATUS	STS-SAF																●																			●		●						●	●
SUPPLY AIR FLOW	AM-SA				●			●																																			●	
FINAL-FILTER STATUS	DPS-PFL															●																		●				●						●	●
O.A. FLOW	---														●																	●	●											●	●
HI STATIC	SPS-SHI																						●											●				●						●	●
UNIT DISCHARGE TEMPERATURE	TT-DAT	●																														●	●					●						●	●
SUPPLY STATIC	SPT-SA		●																													●	●											●	●
RETURN SMOKE DETECTOR	SD-RA																					●															●							●	●
SUPPLY SMOKE DETECTOR	SD-SA																					●															●							●	●
FIRE ALARM	---																					●															●							●	●
SMOKE DAMPER (TYP.)	---																										●																	●	
EXHAUST FAN START/STOP (TYP.)	SS-EF																								●																			●	
EXHAUST FAN STATUS (TYP.)	STS-EF									●																						●												●	●
ISO. RM PRESS. MONITOR (REMARK 4)																																			●			●							●

REMARKS:

1. PROVIDE TEMPERATURE SENSOR ON DISCHARGE OF EACH VAV TERMINAL BOX. (REFER TO PLANS FOR NUMBER REQUIRED)
2. PROVIDE SEPARATE O.A. TEMP. READOUT FOR EACH AHU.
3. REFER TO DRAWINGS FOR NUMBER OF EXHAUST FANS INTERLOCKED WITH EACH AHU.
4. PROVIDE DOOR SWITCH INTERLOCKED WITH PRESSURE MONITOR TO DISABLE MONITOR ALARM WHEN DOOR IS OPEN.

SEQUENCE OF OPERATION FOR USE WITH RTU-1, RTU-2, AND RTU-3 ONLY

SUPPLY AIR AND RETURN AIR FAN
SUPPLY AIR AND RETURN AIR FANS SHALL BE ENERGIZED/DE-ENERGIZED FROM THE VFD IN HAND POSITION OR THE DDC SYSTEM WHEN IN AUTO MODE. THE DDC CONTROL SYSTEM SHALL SENSE WHEN THE FAN IS IN HAND POSITION BY THE FAN STATUS VERIFICATION AND INITIATE THE AHU CONTROL SEQUENCE.

IN HAND MODE OR AUTO MODE THE TWO-POSITION MINIMUM OUTSIDE AIR DAMPER (D-MIN) SHALL OPEN. ONCE THE DAMPER IS OPEN AND THE END SWITCH CONTACT IS MADE, THE SUPPLY FAN SHALL START, AND THE DDC SYSTEM SHALL SIGNAL THE ASSOCIATED RETURN AND EXHAUST FANS TO START.

FANS SHALL SHUT DOWN FROM A SIGNAL FROM:
- THE FIRE ALARM PANEL THRU THE F/A RELAY.
- THE SUPPLY AIR SMOKE DETECTOR(S) (SD-SA).
- THE RETURN AIR SMOKE DETECTOR(S) (SD-RA).
- THE HIGH/LOW LIMIT STATIC PRESSURE SWITCHES (SPS-SHI & RLO).

WHEN THE SUPPLY FAN SHUTS DOWN THE FOLLOWING SHALL OCCUR:
- THE MINIMUM OUTSIDE AIR DAMPER (D-MIN) SHALL CLOSE.
- THE ECONOMIZER OUTSIDE AIR DAMPER (D-EOA) SHALL CLOSE.
- THE RELIEF DAMPER (D-REL) SHALL CLOSE.
- THE RETURN DAMPER (D-RET) SHALL OPEN.
- THE CONDENSER FANS AND COMPRESSORS SHALL DEACTIVATE
- THE RETURN FAN AND THE ASSOCIATED EXHAUST FANS SHALL SHUTDOWN.

SUPPLY FAN SPEED CONTROL
THE SUPPLY FANS VARIABLE FREQUENCY DRIVE (VFD) SHALL BE CONTROLLED BY A DUCT MOUNTED DIFFERENTIAL STATIC PRESSURE TRANSMITTER (SPT-SA) MODULATING THE VFD TO MAINTAIN A SUPPLY DUCT STATIC PRESSURE AT THE LOWEST SET POINT POSSIBLE AS DETERMINED BY THE TAB CONTRACTOR. THE VFD SHALL OUTPUT THE % FULL SPEED TO THE DDC SYSTEM THROUGH THE NETWORK INTERFACE.

ON A FALL IN DIFFERENTIAL PRESSURE SENSED BY SPT-SA, THE DDC SYSTEM SHALL SPEED UP THE SUPPLY FAN'S VFD TO MAINTAIN SPT-SA AT SET POINT. ON A RISE IN DIFFERENTIAL PRESSURE SENSED BY SPT-SA, THE DDC SYSTEM SHALL SLOW DOWN THE SUPPLY FAN'S VFD TO MAINTAIN SPT-SA AT SET POINT. SPT-SA SHALL ALARM THE DDC SYSTEM IF ITS MEASURED PRESSURE IS 10% (ADJ.) ABOVE OR BELOW SETPOINT.

SPS-SHI SHALL SHUTDOWN THE FANS WHENEVER IT SENSES A HIGH STATIC PRESSURE, ALARM THE DDC SYSTEM, AND REQUIRE A LOCAL MANUAL RESET TO RESTART THE FAN. SPS-RLO SHALL SHUTDOWN THE FANS WHENEVER IT SENSES A LOW STATIC PRESSURE AND ALARM THE DDC SYSTEM AND REQUIRE A LOCAL MANUAL RESET TO RESTART THE FAN

VOLUMETRIC TRACKING
THE RETURN AIR FAN VFD SHALL BE CONTROLLED FROM AN OUTSIDE AIR QUANTITY SOFTWARE SET POINT (SCHEDULED OUTSIDE AIR QUANTITY, ADJ.) USING AIRFLOW MEASURING DEVICES AND TRANSMITTERS AM-SA AND AM-RA INSTALLED AT THE INLET OF THE SUPPLY AND RETURN FANS. AM-SA SHALL MEASURE THE TOTAL AIRFLOW OF THE SUPPLY FAN AND AM-RA SHALL MEASURE THE TOTAL AIRFLOW OF THE RETURN FAN. THE AIRFLOW MEASURING TRANSMITTERS SHALL OUTPUT THE TOTAL CFM READING TO THE DDC SYSTEM. THE DDC SYSTEM SHALL CALCULATE THE DIFFERENCE OF THE TOTAL SUPPLY AIR AND THE TOTAL RETURN AIR TO MAKE AN OUTSIDE AIR QUANTITY SOFTWARE POINT. THE DDC SYSTEM SHALL MODULATE THE SPEED OF THE RETURN AIR FAN VFD TO MAINTAIN THE CALCULATED OUTSIDE AIR QUANTITY WITHIN 2% OF THE OUTSIDE AIR QUANTITY SET POINT.

STATIC PRESSURE RESET
THE SUPPLY AIR STATIC PRESSURE SHALL BE RESET BASED ON THE TERMINAL BOX AIR DAMPER POSITION. THE STATIC PRESSURE CONTROL LOOP SHALL POLL ALL TERMINAL BOXES IN THE SYSTEM AND REDUCE STATIC PRESSURE OVER AN ADJUSTABLE TRANSITION TIME UNTIL ANY TERMINAL BOX AIR DAMPER HAS OPENED TO 95% (ADJ.). STATIC PRESSURE WILL INCREASE IN THE SAME MANNER WHEN ANY TERMINAL BOX IN THE SYSTEM IS ABOVE 95%. ANY TERMINAL BOX IN THE SYSTEM MAY BE ADDED TO AN EXCEPTION LIST AND ELIMINATED FROM THE STATIC PRESSURE RESET CONTROL LOOP.

DISCHARGE AIR TEMPERATURE RESET
WHEN THE OUTDOOR AIR TEMPERATURE IS BELOW 65°F THE DISCHARGE AIR TEMPERATURE RESET CONTROL LOOP SHALL START. WHEN OUTDOOR AIR TEMPERATURE IS ABOVE 65°F THE RESET LOOP WILL BE OFF AND SYSTEM WILL REVERT BACK TO ORIGINAL DISCHARGE TEMPERATURE SETPOINT. THE DISCHARGE AIR TEMPERATURE IS RESET UP TO A MAXIMUM OF 60°F (ADJ.) WHEN ALL TERMINAL BOX REHEAT VALVES ARE ABOVE 5% OPEN (ADJ.). IF ANY TERMINAL BOX REHEAT VALVE IS BELOW 5% FOR AN ADJUSTABLE TRANSITION TIME THE DISCHARGE AIR TEMPERATURE WILL RESET DOWN. THE TEMPERATURE RESET LOOP WILL MAKE 1DEG INCREMENTAL CHANGES OVER A 1 HOUR (ADJ.) TIME PERIOD. ANY TERMINAL BOX IN THE SYSTEM MAY BE ADDED TO AN EXCEPTION LIST AND ELIMINATED FROM THE DISCHARGE TEMPERATURE RESET CONTROL LOOP.

AIR HANDLER OPERATING STATES
THE AIR HANDLING UNIT SHALL OPERATE IN THREE DISTINCT STATES. CRITERIA TO TRANSITION BETWEEN STATES ARE INDICATED BELOW. TO TRANSITION BETWEEN STATES THE SPECIFIED CRITERIA SHALL BE MET FOR AN ADJUSTABLE MINIMUM PERIOD OF TIME REFERRED TO AS "TRANSITION TIME". EACH INDIVIDUAL OPERATING STATE TO HAVE AN INDIVIDUAL PID CONTROL LOOP FOR THAT STATE.

STATE 1 – FULL COOLING COIL
ECONOMIZER OUTSIDE AIR DAMPER AND RELIEF DAMPER SHALL BE CLOSED. THE DX COOLING SHALL BE CONTROLLED BY A CONTROL LOOP WITH THE DISCHARGE TEMPERATURE TRANSMITTER, TT-DAT, AD THE INPUT AND A SET POINT EQUAL TO THE DISCHARGE AIR SET POINT OF (55°F, ADJ.). ON A RISE IN TEMPERATURE ABOVE TT-DAT SET POINT, THE COMPRESSORS SHALL MODULATE UP. ON A FALL IN TEMPERATURE BELOW TT-DAT SET POINT, THE VALVE SHALL MODULATE DOWN. TT-DAT SHALL ALARM THE DDC SYSTEM WHENEVER THE DISCHARGE TEMPERATURE IS TOO HIGH OR LOW. THE COMPRESSOR CONTROL LOOP SHALL CONTROL THE LEAVING AIR TEMPERATURE WITHIN +/- 0.5°F.

TRANSITION FROM STATE 1 TO STATE 2 (FULL ECONOMIZER WITH COOLING COIL):
THERE SHALL BE AN ADJUSTABLE OUTSIDE AIR ECONOMIZER ENABLE TEMPERATURE (65°F) AND AN ADJUSTABLE DEAD BAND (+/-2°F). THE UNIT SHALL TRANSITION FROM STATE 1 TO STATE 2 WHENEVER THE OUTSIDE AIR TEMPERATURE IS BELOW THE ECONOMIZER ENABLE TEMPERATURE LESS THE DEAD BAND (65°F – 2°F = 63°F) FOR AN ADJUSTABLE TRANSITION TIME (5 MINUTES).

TRANSITION FROM STATE 2 TO STATE 1:
THE UNIT SHALL TRANSITION FROM STATE 2 TO STATE 1 WHENEVER THE OUTSIDE AIR TEMPERATURE IS ABOVE THE ECONOMIZER ENABLE TEMPERATURE PLUS THE DEAD BAND (65°F + 2°F = 67°F) FOR AN ADJUSTABLE TRANSITION TIME (5 MINUTES).

STATE 2 – FULL ECONOMIZER WITH COOLING COIL
ECONOMIZER OUTSIDE AIR DAMPER AND RELIEF DAMPER SHALL BE FULLY OPEN. THE DX COOLING SHALL BE CONTROLLED BY A UNIT-LEVEL CONTROL LOOP WITH THE DISCHARGE TEMPERATURE TRANSMITTER, TT-DAT , AS THE INPUT, AND A SET POINT EQUAL TO THE DISCHARGE AIR SET POINT OF (55°F, ADJ.).

TRANSITION FROM STATE 2 TO STATE 3 (FREE COOLING):
THE UNIT SHALL TRANSITION FROM STATE 2 TO STATE 3 WHENEVER THE FOLLOWING OCCURS. THE COMPRESSOR CONTROL LOOP HAS A COOLING VALUE OUTPUT OF 0% FOR AN ADJUSTABLE TRANSITION TIME (5 MINUTES).

TRANSITION FROM STATE 3 TO STATE 2:
THE UNIT SHALL TRANSITION FROM STATE 3 TO STATE 2 WHENEVER THE FOLLOWING OCCURS. THE ECONOMIZER DAMPER CONTROL LOOP HAS AN OUTPUT OF 100% OPEN FOR AN ADJUSTABLE TRANSITION TIME (10 MINUTES).

STATE 3 – FREE COOLING:
THE MECHANICAL COOLING SHALL REMAIN DEACTIVED AND THE ECONOMIZER AIR DAMPER (D-EOA), RELIEF AIR DAMPER (D-REL), AND THE RETURN AIR DAMPER (D-RET) SHALL MODULATE TO MAINTAIN THE DISCHARGE AIR TEMPERATURE AT THE DISCHARGE AIR TEMPERATURE SET POINT.

THE DISCHARGE AIR TEMPERATURE CONTROL LOOP SHALL HAVE THE UNIT DISCHARGE AIR TEMPERATURE TRANSMITTER (TT-DAT) AS THE INPUT AND A SET POINT EQUAL TO THE COOLING COIL SET POINT (55°F). ON A RISE IN DISCHARGE AIR TEMPERATURE THE ECONOMIZER OUTSIDE AIR AND RELIEF AIR DAMPERS SHALL MODULATE OPEN AND THE RETURN AIR DAMPER SHALL MODULATE CLOSED. ON A FALL IN DISCHARGE AIR TEMPERATURE THE ECONOMIZER OUTSIDE AIR DAMPER AND RELIEF AIR DAMPER SHALL MODULATE CLOSED AND THE RETURN AIR DAMPER SHALL MODULATE OPEN. DAMPERS SHALL MAINTAIN DAT TO WITHIN +/- ½ °F OF SET POINT.

MIXED AIR LOW LIMIT CONTROL
THE MIXED AIR LOW LIMIT CONTROL LOOP SHALL BE OPERATIVE AT ALL TIMES WHEN THE UNIT IS IN ANY STATE, INCLUDING WHEN THE UNIT IS DE-ENERGIZED, TO MAINTAIN A MINIMUM MIXED AIR TEMPERATURE. THE MIXED AIR LOW LIMIT CONTROL LOOP SHALL HAVE THE MIXED AIR TEMPERATURE TRANSMITTER (TT-MAT) AS INPUT. AT A MIXED AIR TEMPERATURE OF 40°F (ADJ.) THE BAS SHALL ALARM AND DISABLE/CLOSE THE ECONOMIZER DAMPERS REVERTING TO MINIMUM OUTSIDE AIR OPERATION. SOFTWARE RESET BY THE MAINTENANCE STAFF SHALL BE REQUIRED TO RETURN TO NORMAL OPERATION.

FILTERS
ALL FILTERS SHALL HAVE A DIFFERENTIAL PRESSURE SWITCH (DPS-FIL & DPS-PFL) MEASURING THE PRESSURE DROP ACROSS THE FILTER BANKS. EACH SHALL ALARM THE DDC SYSTEM WHENEVER THE PRESSURE DROP ACROSS THE FILTER IS EXCESSIVE (DIRTY FILTER) (ADJ.).

FIRE ALARM SHUTDOWN
WHENEVER THE FIRE ALARM SYSTEM SENSES SMOKE/FIRE, THE FIRE ALARM SYSTEM SHALL COMPLETE THE FOLLOWING.

THE FIRE ALARM SYSTEM IS TO DE-ENERGIZE THE UNIT AND SHALL PERFORM THE FOLLOWING.
- SHUTDOWN THE SUPPLY AIR FAN.
- SHUTDOWN THE RETURN AIR FAN.
- SHUTDOWN THE ASSOCIATED EXHAUST FANS.

THE DDC SYSTEM IS TO PERFORM THE FOLLOWING UPON A LOSS OF SUPPLY FAN STATUS.
- DEACTIVE MECHANICAL COOLING.
- CLOSE THE RELIEF AIR DAMPER (D-REL).
- CLOSE THE OUTSIDE AIR DAMPER (D-MIN).
- CLOSE THE ECONOMIZER DAMPER (D-EOA).
- OPEN THE RETURN AIR DAMPER (D-RET).

PROGRAM DESIGN
WHEN THE SUPPLY FAN IS STARTED, THE AHU SHALL ALWAYS GO TO STATE 1 WITHOUT ENABLING THE DX COOLING. THE UNIT SHALL OPERATE IN STATE 1 FOR A 4 MINUTE TIME PERIOD (ADJ.). AFTER THE 4 MINUTE TIMER HAS EXPIRED ONE OF THE FOLLOWING SHALL OCCUR:
- IF THE OAT IS EQUAL TO OR GREATER THAN 52°F (ADJ.) THE UNIT SHALL REMAIN IN STATE 1 UNTIL IT TRANSITIONS TO ANOTHER OPERATING STATE PER THE DETAILED SEQUENCES ABOVE OR,
- IF THE OAT IS LESS THAN 52°F (ADJ.) THE UNIT SHALL TRANSITION TO STATE 3 AND REMAIN IN STATE 3 UNTIL IT TRANSITIONS TO ANOTHER OPERATING STATE PER THE DETAILED SEQUENCES ABOVE.
- THIS AHU SEQUENCE OF OPERATION SHALL INITIATE THE OPERATION OF THE MECHANICAL COOLOING, IF IT IS NOT ALREAD IN OPERATION, IF THE AHU TRANSITIONS FROM STATE 3 TO STATE 2.

ALL TIMERS AND OTHER SPECIFIED PARAMETERS ARE TO BE INDEPENDENTLY ADJUSTABLE.

SOFTWARE STATUS POINTS SHALL BE CREATED FOR THE FOLLOWING LOCKOUTS AND FINITE STATES. THE CURRENT STATUS OF THE SOFTWARE LOCKOUT POINTS, ENABLED OR DISABLED, SHALL BE DISPLAYED AT THE BAS/FMS FRONT END:
- ECONOMIZER DAMPERS FULLY OPEN LOCKOUT
- ECONOMIZER DAMPERS FULLY CLOSED LOCKOUT
- STATE #1
- STATE #2
- STATE #3

THE AHU SHALL RESTART AUTOMATICALLY AFTER A MOMENTARY POWER FAILURE OR AFTER TRANSFER TO AN ALTERNATE POWER SOURCE AND OPERATE IN THE SAME STATE IT WAS IN PRIOR TO THE POWER FAILURE OR TRANSFER OF POWER.

EXHAUST FANS
EXHAUST FANS TO BE ENERGIZED WHEN RESPECTIVE SUPPLY AIR FAN IS ENERGIZED. SEE PLANS FOR WHICH FANS ARE ASSOCIATED WITH WHICH AIR HANDLING UNITS (EXAMPLE: EF3-1 IS INTERLOCKED WITH AHU-3). EXCEPTION--ISOLATION ROOM EXHAUST FANS SHALL OPERATE CONTINUOUSLY.

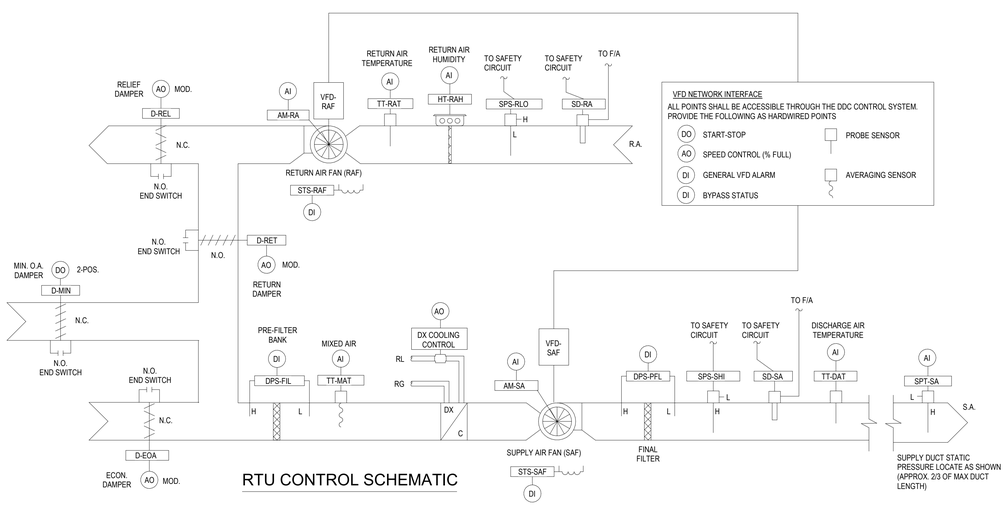

RTU CONTROL SCHEMATIC

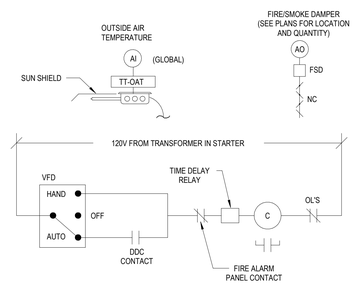

RETURN FAN RAF CONTROL

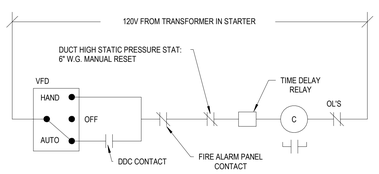

SUPPLY FAN SAF CONTROL

ENVIRONMENTS FOR HEALTH ARCHITECTURE
e4h
888.781.8441 817.226.1917 801 Cherry St. Ste. 500, Fort Worth, TX 76102 e4harchitecture.com

© 2025 E4H - Environments For Health, LLC

exalt health

RYAN

ICT
I.C. Thomasson Associates, Inc.
A Salas O'Brien Company
2950 Kraft Drive
Nashville, TN 37204
PHONE 615-346-3400
https://www.ictthomasson.com/
ICT Project No. 2545-02546

FIRM CERTIFICATE OF AUTHORIZATION: CA-1276

ELECTRICAL ENGINEER
FLORIDA REGISTRATION:
JOSHUA R. CARTWRIGHT, P.E. #71893

MECHANICAL ENGINEER
FLORIDA REGISTRATION:
ZACHARY N. McCOY, P.E. #93060

EXALT HEALTH
40 BED REHAB HOSPITAL - PANAMA CITY BEACH
2851 HWY 77
PANAMA CITY, FLORIDA 32405

PROJECT: H002125

Δ	DATE	DESCRIPTION

NOT FOR CONSTRUCTION

ORIG SUBMISSION: 02/13/26
CURRENT:

SHEET TITLE AND NUMBER:

M5.01

MECHANICAL - CONTROLS