THE LINE SHOWN ABOVE IS EXACTLY ONE INCH LONG AT FULL SCALE

EMS POINT SUMMARY TYPICAL REHEAT BOX

POINT DESCRIPTION	HARDWARE																	SOFTWARE																							
	OUTPUT (O)							INPUT (T,D,V,C)										ALARMS					FUNCTIONS																		
	DIGITAL			ANALOG				DIGITAL					ANALOG					DIGITAL			ANALOG																				
	Control Relay	Solenoid	Contactor	Space Temp Control	DCC Control Signal	4-20MA Signal		Differential Press Switch	Flow Switch	Switch Closure	Auxiliary Contact	Current Relay	Alarm Condition	Temperature	Relative Humidity	Pressure	Position	Flow	Amperes	Equipment Status	Maintenance		High Limit	Low Limit	Run Time	Log Data	Scheduled Start/Stop	Optimum Start/Stop	Duty Cycle Balancing	Trend Differential Flow	Day/Night Setback	Economizer	Ventilation/Recirculation	Temperature Control	Enthalpy	Sup Air CFM	Reheat Coil Reset	Volume control	Damper Position	Valve Position	Chiller Optimization	Chilled Water Reset	Condenser Water Reset	Cooling Demand Limit	VFD Control	Alarm Condition
REHEAT VAV BOX AND SUPPLY TRACKING VALVES:																									●																		
SPACE TEMPERATURE SETPOINT (ADJ)				●										●											●																		
ACTUAL BOX CFM																		●							●																		
BOX CFM MINIMUM																									●						●				●								
BOX CFM MAXIMUM																									●						●				●								
DAMPER POSITION																	●								●												●						
COMMANDED DAMPER POSITION						●																			●																		
SUPPLY AIR TEMPERATURE TO SPACE														●									●		●																		
SCR REHEAT CONTROL				●		●											●								●								●										
VAV BOX CALIBRATION																												●															

REMARKS:

1. CONTROLS CONTRACTOR SHALL PROVIDE OPTION TO CALIBRATE ALL REHEAT BOXES WITHOUT CLOSING BOX DAMPERS.
2. ALL REHEAT BOXES TO BE CONTROLLED AS INDICATED ABOVE. CONTRACTOR TO VERIFY NUMBER OF BOXES BEING PROVIDED ON PROJECT.
3. PROVIDE TEMPERATURE SENSOR ON DISCHARGE OF EACH VAV TERMINAL BOX. (REFER TO PLANS FOR NUMBER REQUIRED)

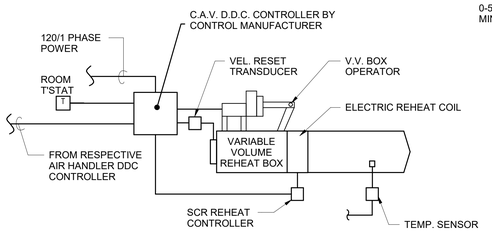

TYPICAL VARIABLE VOLUME REHEAT BOX CONTROL

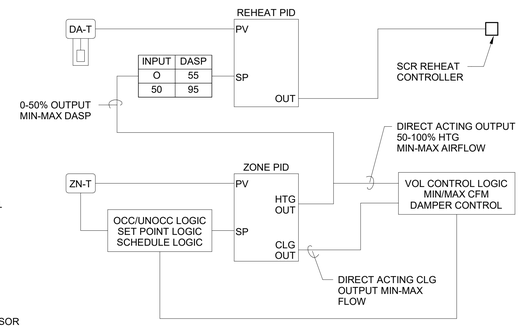

DUAL PID TERMINAL UNIT - ELEMENTAL LOGIC DETAIL

DUAL PID VAV SEQUENCE OF OPERATION:

1. PROVIDE A 2 DEG F MINIMUM DEADBAND BETWEEN THE HEATING AND COOLING SPACE TEMPERATURE SETPOINTS. WHEN THE SPACE TEMPERATURE IS IN THE DEAD BAND, THE VAV SHALL PROVIDE MINIMUM COOLING AIR FLOW AND THE REHEAT COIL SHALL BE DE-ENERGIZED.

COOLING MODE:

1. ON A RISE IN ROOM TEMPERATURE ABOVE THE COOLING SETPOINT THE LOCAL CONTROLLER WILL SHIFT TO COOLING CONTROL LOGIC AFTER AN ADJUSTABLE TIME DELAY (5 MIN).
2. AFTER THE TIME DELAY HAS EXPIRED AND THE MODE HAS CHANGED TO COOLING, THE FLOW SETPOINT WILL CHANGE TO THE COOLING MINIMUM CFM SETPOINT.
3. ON AN INCREASE IN THE ZONE PID COOLING OUTPUT, THE VOLUME CONTROL SHALL INCREASE FROM THE MINIMUM COOLING FLOW TO THE MAXIMUM COOLING FLOW.
4. ON A DECREASE IN THE ZONE PID COOLING OUTPUT, THE INVERSE CONTROL WILL OCCUR AND REDUCE THE COOLING FLOW FROM MAXIMUM COOLING FLOW TO MINIMUM COOLING FLOW. ON A FURTHER REDUCTION IN ZONE TEMPERATURE BELOW THE ZONE HEATING SETPOINT THE VAV CONTROLLER WILL SHIFT THE MODE TO THE HEATING CONTROL LOGIC AFTER AN ADJUSTABLE TIME DELAY (5 MIN).

HEATING MODE:

1. ON A DROP IN ROOM TEMPERATURE BELOW THE HEATING SETPOINT THE ZONE PID CONTROL HEATING OUTPUT WILL INCREASE.
2. ON AN INCREASE IN THE ZONE PID HEATING OUTPUT FROM 0-50%, THE REHEAT PID DISCHARGE SETPOINT WILL INCREASE FROM MINIMUM TO MAXIMUM DISCHARGE AIR TEMPERATURE SETPOINT, INITIALLY SET AT 55 DEG F (MIN - ADJ.) AND 95 DEG F (MAX - ADJ.). THE BOX CONTROLLER WILL MODULATE THE REHEAT COIL FROM 0 TO 100% OUTPUT IN RESPONSE TO PID HEATING OUTPUT.
3. WITH THE HEATING COIL AT 100% OUTPUT, AND ON A FURTHER INCREASE IN THE ZONE PID HEATING OUTPUT FROM 50-100% THE VOLUME CONTROL SHALL INCREASE FROM THE MINIMUM HEATING AIR FLOW TO THE MAXIMUM HEATING AIR FLOW.
4. ON AN INCREASE IN ZONE TEMPERATURE THE INVERSE CONTROL WILL OCCUR: FIRST REDUCING HEATING AIR VOLUME FROM MAXIMUM TO MINIMUM HEATING AIR FLOW. THEN REDUCING THE REHEAT PID LOOP SETPOINT AND REHEAT COIL FROM MAXIMUM TO MINIMUM. WITH THE ZONE PID TEMPERATURE WITHIN THE DEADBAND REGION AND THE ZONE HEATING OUTPUT AT "0"%, THE VAV BOX WILL OPERATE AT MINIMUM HEATING FLOW WITH MINIMUM REHEAT PID SETPOINT.

UNOCCUPIED MODE/OCCUPANCY OVERRIDE:

1. THE SEQUENCES ABOVE DESCRIBE THE OCCUPIED COOLING AND HEATING OPERATION MODES. VAV BOX CONTROLS SHALL INCLUDE THE ABILITY TO RESET SPACE TEMPERATURE SET POINTS BASED ON A PRESET SCHEDULE TO A USER ADJUSTABLE UNOCCUPIED COOLING AND HEATING SET POINT.
2. WHEN ACTIVATED BY BAS TIME SCHEDULE, THE VAV BOX SHALL OPERATE WITH COOLING AND HEATING MODES AS DESCRIBED ABOVE WITH ROOM TEMPERATURE SETPOINT EQUAL TO UNOCCUPIED COOLING AND UNOCCUPIED HEATING SETPOINTS INITIALLY SET AT 80 DEG F COOLING (ADJ.) AND 65 DEG F HEATING (ADJ.).
3. AN OVERRIDE PUSHBUTTON ON THE THERMOSTAT SHALL SWITCH THE SPACE TO OCCUPIED MODE FOR ATIME PERIOD OF 4 HOURS (ADJ.). WHERE APPLICABLE, ACTIVATION OF THE OCCUPIED OVERRIDE SWITCH SHALL COMMAND ASSOCIATED AIR HANDLER INTO OCCUPIED MODE. REFER TO AHU SEQUENCE OF OPERATION FOR REQUIRED OCCUPIED/UNOCCUPIED MODE OF OPERATION.

NOTES:

1. MULTIPLE TERMINAL UNITS SERVED FROM A SINGLE THERMOSTAT SHALL OPERATE FROM ONE MASTER CONTROLLER. REMAINING CONTROLLERS TO BE SLAVE AND SHALL OPERATE TO MAINTAIN THE MASTER CONTOLLER OUTPUT FOR REHEAT VALVE AND DAMPER POSITION.

EMERGENCY MECHANICAL ROOM SHUT-OFF CONTROL

SEQUENCE OF OPERATION

1. WHEN ENABLED BY PUSH BUTTON, ENABLE AUDIBLE AND VISUAL ALARMS OUTSIDE DOOR TO MECHANICAL ROOM AND ALARM AT MAINTENANCE OFFICE AND PBX. EMERGENCY SHUT OFF TO SHUT MAIN NATURAL GAS SHUT OFF VALVE TO GAS FIRED DOMESTIC WATER HEATER.
2. SYSTEM WILL REQUIRE A MANUAL RESET.

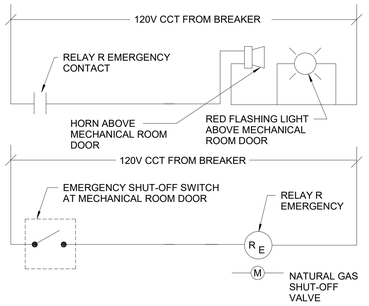

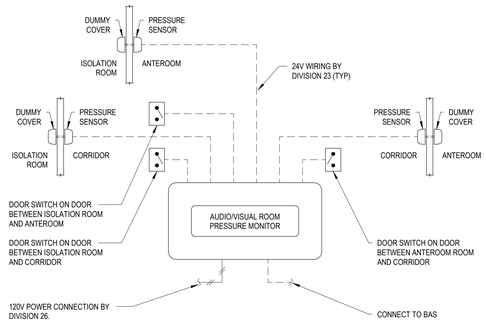

ISOLATION / ANTE ROOM PRESSURE MONITOR CONTROL

NOTES:

1. PRESSURE SENSOR TO BE MOUNTED HALFWAY BETWEEN TOP OF DOOR JAMB AND CEILING WITHIN THE CONTROLLED SPACE. DUMMY COVER MOUNTED IN REFERENCE SPACE.
2. PRESSURE MONITOR TO BE MOUNTED 60"-72" A.F.F.
3. MINIMUM PRESSURE DIFFERENTIAL TO BE -0.01"

ENVIRONMENTS FOR HEALTH ARCHITECTURE
e4h
817.226.1917 | 801 Cherry St. Ste. 500, Fort Worth, TX 76102 | 888.781.8441 | e4harchitecture.com

© 2025 E4H - Environments For Health, LLC

exalt health

RYAN

ICT
I.C. Thomasson Associates, Inc.
A Salas O'Brien Company
2950 Kraft Drive
Nashville, TN 37204
PHONE 615-346-3400
https://www.ictthomasson.com/
ICT Project No. 2545-02546

FIRM CERTIFICATE OF AUTHORIZATION: CA-1276

ELECTRICAL ENGINEER
FLORIDA REGISTRATION:
JOSHUA R. CARTWRIGHT, P.E. #71893

MECHANICAL ENGINEER
FLORIDA REGISTRATION:
ZACHARY N. McCOY, P.E. #93060

EXALT HEALTH
40 BED REHAB HOSPITAL - PANAMA CITY BEACH
2851 HWY 77
PANAMA CITY, FLORIDA 32405

PROJECT: H002125

Δ	DATE	DESCRIPTION

NOT FOR CONSTRUCTION

ORIG SUBMISSION: 02/13/26
CURRENT:

SHEET TITLE AND NUMBER:

M5.03

MECHANICAL - CONTROLS