THE LINE SHOWN ABOVE IS EXACTLY ONE INCH LONG AT 30" X 42" SHEETS

KITCHEN AND FOOD SERVICE EQUIPMENT GENERAL NOTES

IT SHALL BE THIS CONTRACTOR'S RESPONSIBILITY TO CONNECT ALL KITCHEN AND FOOD SERVICE EQUIPMENT COMPLETE, INCLUDING BUT NOT LIMITED TO THE FOLLOWING:

A. ALLOW FOR, FURNISH, AND INSTALL ALL REQUIRED TRAPS.

B. STOPS SHALL BE FURNISHED AND INSTALLED ON ALL HOT AND COLD WATER LINES AT EQUIPMENT IN AN ACCESIBLE LOCATION.

C. FOOD SERVICE EQUIPMENT CONTRACTOR SHALL FURNISH DISPOSER UNITS COMPLETE WITH VACUUM BREAKER AND FULL PORTED SOLENOID VALVE. PLUMBING CONTRACTOR SHALL FURNISH TRAPS, SHOCK ABSORBERS, AND SHUTOFF VALVES AND MAKE FINAL CONNECTIONS.

D. GENERAL WATER PRESSURE IN KITCHEN AREA SHALL NOT EXCEED 50 PSI. PLUMBING CONTRACTOR SHALL FURNISH AND INSTALL REDUCING VALVES AS REQUIRED. AT THE DISHWASHER CONNECTION, THE PLUMBING CONTRACTOR SHALL PROVIDE AND INSTALL THE FOLLOWING: WATTS 135LP PRESSURE REDUCING VALVES SET TO MAINTAIN 20 PSI OUTLET PRESSURE, MARSH 2-1/2" FACE – 0-60 PSI PRESSURE GAUGE WITH 1/4" BRASS TEE HANDLE COCK, AND WEKSLER AA5 THERMOMETER WITH 9" SCALE AND SEPARABLE SOCKET. LINE SHALL BE INCREASED AT THERMOMETER TO ALLOW THERMOMETER BULB TO BE INSTALLED WITHIN THE LINE WITHOUT OBSTRUCTING THE LINE FLOW SIZE

E. EXPOSED PIPES TO STEAMERS, KETTLES, ETC., SHALL BE CHROME PLATED OR STAINLESS STEEL. EQUIPMENT SINKS SHALL BE PROVIDED WITH 1-1/2" CONNECTIONS. 2" ROTARY TYPE DRAINS SHALL BE COMPLETE WITH 1-1/2" THREADED WASTE CONNECTION ADAPTERS.

F. TAILPIECE FOR SINKS SHALL BE CHROME PLATED, FLARED BRASS TUBING FOR CONNECTION TO 1-1/2" IPS MALE PIPE THREADED FITTING.

G. P-TRAP SHALL BE CHROME PLATED, ADJUSTABLE CAST BRASS, UNIFORM CODE PATTERN, COMPLETE WITH CLEANOUT.

H. ALL FLOOR OPENINGS ARE TO BE SEALED WATERTIGHT BY MEANS OF SLEEVES

I. INDIRECT WASTE LINES REQUIRED FOR STANDARD AND/OR FABRICATED ITEMS OF KITCHEN EQUIPMENT SHALL BE FURNISHED, INSTALLED, AND EXTENDED TO DRAIN POSITION BY THE FOOD SERVICE EQUIPMENT CONTRACTOR EXCEPT FOR SINKS.

J. WATER INLET FITTINGS FOR DISHTABLE TROUGHS SHALL BE FURNISHED AND INSTALLED BY THE FOOD SERVICE EQUIPMENT CONTRACTOR. PLUMBING CONTRACTOR SHALL PROVIDE COLD WATER SERVICE, ALL INTERCONNECTING PIPING, AND VACUUM BREAKERS AND MAKE FINAL CONNECTIONS.

K. FOOD SERVICE EQUIPMENT CONTRACTOR SHALL PROVIDE ALL EQUIPMENT TRIM, INCLUDING FAUCETS AND SINK WASTES AND SWING FAUCETS AT KETTLES AND RANGES, ALL TO BE INSTALLED BY THE PLUMBING CONTRACTOR.

L. ALL HORIZONTAL PIPING LINES EXTENDED AND CONNECTED TO EQUIPMENT SHALL BE RUN AT THE HIGHEST POSSIBLE ELEVATION AND NOT LESS THAN 6" ABOVE FLOOR TO PROVIDE CLEARANCE FOR CLEANING. AT WALL OR COLUMN LOCATIONS, PIPING ROUGH-IN SHALL BE STUBBED IN WALLS WHEREVER POSSIBLE.

M. PLUMBING CONTRACTOR SHALL COORDINATE WITH KITCHEN EQUIPMENT CONTRACTOR FOR EXACT LOCATIONS OF FLOOR DRAINS AND STUBOUTS FOR KITCHEN EQUIPMENT. PLUMBING CONTRACTOR SHALL MAKE FINAL CONNECTIONS TO KITCHEN EQUIPMENT FROM ROUGH-IN. ROUGH-IN SHALL TERMINATE WITH SERVICE VALVE.

FLORIDA GOVERNING CODES

FLORIDA BUILDING CODES:

- FLORIDA BUILDING CODE (2023) INCLUDING:
- FLORIDA ACCESSIBILITY CODE (2023)
- FLORIDA ENERGY COMPLIANCE CODE (2023)
- FBC TEST PROTOCOLS FOR HIGH VELOCITY HURRICANE ZONES (2023)
- FBC MECHANICAL CODE (2023)
- FBC PLUMBING CODE (2023)
- FBC FUEL GAS CODE (2023)
- GUIDELINES FOR DESIGN AND CONSTRUCTION OF HOSPITALS (2022)

FLORIDA ADMINISTRATIVE CODES (INCLUDING LIFE SAFETY CODES):

CODES AS REFERENCED IN THE FLORIDA BUILDING CODE, SECTION 419: HOSPITALS

- CHAPTER 69A-53: UNIFORM FIRE SAFETY STANDARDS FOR HOSPITALS AND NURSING HOMES
- CHAPTER 69A-3.012: STANDARDS OF THE NATIONAL FIRE PROTECTION ASSOCIATION AND OTHER STANDARDS ADOPTED

FLORIDA FIRE PREVENTION CODE (2018) WHICH INCLUDES:

- NFPA 1, UNIFORM FIRE CODE (2021 EDITION)
- NFPA 13, STANDARD FOR INSTALLATION OF SPRINKLER SYSTEMS (2019)
- NFPA 14, STANDARD FOR INSTALLATION OF STANDPIPE AND HOSE SYSTEMS (2018)
- NFPA 20, INSTALLATION OF STATIONARY PUMPS FOR FIRE PROTECTION (2018)
- NFPA 25, INSPECTION, TESTING, AND MAINTENANCE OF WATER-BASED FIRE PROTECTION SYSTEMS (2020)
- NFPA 50, STANDARD FOR BULK OXYGEN SYSTEMS AT CONSUMER SITES (2018)
- NFPA 72, STANDARD FOR THE NATIONAL FIRE ALARM AND SIGNALING CODE (2016)
- NFPA 90A, STANDARD FOR THE INSTALLATION OF AIR CONDITIONING SYSTEMS (2021)
- NFPA 90B, STANDARD FOR THE INSTALLATION OF WARM AIR HEATING SYSTEMS (2021)
- NFPA 99, HEALTH CARE FACILITIES (2021)
- NFPA 101, LIFE SAFETY CODE (2021 EDITION)
- SFM UNIFORM FIRE SAFETY RULES: HTTPS://WWW.FLRULES.ORG/GATEWAY/ORGANIZATION.ASP?ID=359 OR 850-413-3619
- CHAPTER 633, FLORIDA STATUTES, FIRE PREVENTION AND CONTROL: HTTP://LEG.STATE.FL.US/STATUTES/ OR 850-413-3619
- NFPA 241, SAFEGUARDING CONSTRUCTION, ALTERATION AND DEMOLITION OPERATIONS (2019)

PLUMBING LEGEND

SYMBOL	DESCRIPTION
	REDUCED PRESSURE BACKFLOW PREVENTER
	P TRAP
	BALL VALVE
	CONNECTION TO EXISTING
	MEDICAL GAS ZONE VALVE BOX
	MEDICAL GAS ALARM PANEL
A	MEDICAL GAS DESIGNATION
	FLOOR DRAIN
P- No.	PLUMBING FIXTURE DESIGNATION
	END CAP
CW	COLD WATER SUPPLY
HW	HOT WATER SUPPLY
HWR	HOT WATER RETURN
140 HWS	140 HOT WATER SUPPLY
140 HWR	140 HOT WATER RETURN
FW	FILTERED WATER
NG	NATURAL GAS
SV	SANITARY VENT
GV	GREASE VENT
SS	SANITARY WASTE
RWL	RAIN WATER LEADER
ORD	OVERFLOW ROOF DRAIN
FD	FOOTING DRAIN
O2	OXYGEN LINE
V	MEDICAL VACUUM LINE

MEDICAL GAS OUTLET SCHEDULE

TAG	TYPE	GASES / APPURTENANCES ACTUAL	GASES / APPURTENANCES REQUIRED	LOCATION
A	WALL	(1) O2 - (1) V	(1) O2 - (1) V	PAT ROOM & ED EXAM

NOTE:

1. REFER TO ARCHITECTURAL ELEVATIONS FOR EXACT LOCATION OF MEDICAL GAS WALL OUTLETS

( ) = MEDICAL GAS TAG - LETTER DESIGNATION CORRESPONDS TO THE "TAG" FIELD IN THIS SCHEDULE

MEDICAL GAS ZONE VALVE & ALARM SCHEDULE

TAG	DESCRIPTION	GASES / APPURTENANCES	LOCATION
ZVB	ZONE VALVE BOX	AS SHOWN ON PLANS	AS SHOWN ON PLANS
MAP	MASTER ALARM PANEL	AS SHOWN ON PLANS	NURSE STATION 1089 & MAINTENANCE 1069

NOTE:

1. REFER TO ARCHITECTURAL ELEVATIONS FOR EXACT LOCATION OF MEDICAL GAS ZONE VALVES AND ALARMS.

GAS STORAGE WATER HEATER SCHEDULE

TAG	MANUFACTURER	MODEL NO.	RECOVERY @100°F	GAS INPUT (BTUH)	LOCATION
WH-1	LOCHINVAR	AWN501PM	582 GPH	500,000	MECH 1031
WH-2	LOCHINVAR	AWN501PM	582 GPH	500,000	MECH 1031

HOT WATER CIRCULATING PUMP SCHEDULE

TAG	MANUFACTURER	MODEL	FLOW (GPM)	HEAD (PSI)	HORSEPOWER	ELECTRICAL	LOCATION
CP-1	GRUNDFOS	MAGNA3 40-120 GF N	25	21	1/2	120/1/60	MECH 1031
CP-2	GRUNDFOS	MAGNA3 32-60 gf	5	11	0.045	120/1/60	MECH 1031

MEDICAL VACUUM PUMP SCHEDULE

TAG	MANUFACTURER	MODEL	TOTAL SYSTEM CAPACITY (SCFM)	TYPE / MOTOR CONFIG.	HORSEPOWER	ELECTRICAL	LOCATION
VP-1	PATTONS	70BI-22-12-A	5	DUPLEX	1.2	208/3/60	PUMP 1027

PLUMBING ABBREVIATIONS

ABBREVIATION	DESCRIPTION	ABBREVIATION	DESCRIPTION
ADA	AMERICANS WITH DISABILITIES ACT	O2	OXYGEN LINE
AFF	ABOVE FINISHED FLOOR	OFE	OWNER FURNISHED EQUIPMENT
BPW	BED PAN WASHER	PAT	PATIENT
CLG	CEILING	PUB	PUBLIC
CONT	CONTINUATION	RPBP	REDUCED PRESSURE BACKFLOW PREVENTER
COORD	COORDINATION	RWL	RAINWATER PIPING
CO	CLEAN OUT	SS	SANITARY SEWER PIPING
CW	COLD WATER LINE	SD	UNDERGROUND STORM PIPING
DN	DOWN	SF	SQUARE FOOT
DWG	DRAWING	SV	SANITARY VENT PIPING
EA	EACH	TMP	TEMPERATURE
FM	FLOOR MOUNTED	TMV	THERMOSTATIC MIXING VALVE
FV	FLUSH VALVE	TYP	TYPICAL
GN	GOOSENECK	V	MEDICAL VACUUM PIPING
GPM	GALLONS PER MINUTE	VTR	VENT THROUGH ROOF
HW	HOT WATER LINE	W/	WITH
HWR	HOT WATER RETURN	WB	WRIST BLADE
LAV	LAVATORY	WC	WATER CLOSET
MAP	MASTER ALARM PANEL	WCO	WALL CLEAN OUT
MECH	MECHANICAL	WH	WALL HUNG
MTD	MOUNTED		

00 PLUMBING FIXTURE CONNECTION SCHEDULE

P NO.	DESCRIPTION	WASTE	COLD WATER	HOT WATER
P101	WATER CLOSET (FM, FV, ACC.)	4"	1"	---
P102	WATER CLOSET (FM, FV, BPW)	4"	1"	---
P103	WATER CLOSET (FM, FV, BARIATRIC, ACC.)	4"	1"	---
P301	LAVATORY (WH, GN, WB, ACC.)	1 1/2"	1/2"	1/2"
P302	LAVATORY (WH, GN, WB, PUB., ACC.)	1 1/2"	1/2"	1/2"
P303	LAVATORY (WH, GN, WB, BARIATRIC, ACC.)	1 1/2"	1/2"	1/2"
P401	SINK (DROP-IN, GN, WB, ACC.)	1 1/2"	1/2"	1/2"
P402	SINK (DROP-IN, KITCHEN, HOSE SPOUT)	1 1/2"	1/2"	1/2"
P501	SERVICE BASIN	3"	1/2"	1/2"
P502	CLINICAL SINK (FM)	4"	1"	1/2"
P601	SHOWER (SS, TRENCH, ACC.)	2"	1/2"	1/2"
P701	FLOOR DRAIN (REG.)	AS SHOWN	---	---
P702	FLOOR DRAIN (MECH.)	AS SHOWN	---	---
P705	FLOOR SINK (HALF GRATE)	AS SHOWN	---	---
P710	ROOF DRAIN	AS SHOWN	---	---
P711	OVERFLOW ROOF DRAIN	AS SHOWN	---	---
P724	DOWNSPOUT NOZZLE	AS SHOWN	---	---
P801	WALL HYDRANT (EXTERIOR)	---	3/4"	---
P802	HOSE BIBB (INTERIOR)	---	3/4"	---
P804	ICE MACHINE CONNECTION BOX	---	1/2"	---
P807	DIALYSIS CONNECTION BOX (TW)	---	1/2"	1/2"
P811B	DRINKING FOUNTAIN (HI-LOW, REMOTE CHILLER, BOTTLE FILLER, ACC.)	1 1/2"	1/2"	---
P813	EMERGENCY EYEWASH (COUNTER MOUNTED)	---	1/2"	1/2"
P815	ICE MAKER CONNECTION BOX W/ DRAIN	2"	1/2"	---
P819	ROOF HYDRANT	---	3/4"	---
P901	BATHTUB	2"	1/2"	1/2"

NOTES:
1. ALL WALL MTD. FIXTURES SHALL BE PROVIDED WITH FLOOR MOUNTED, CONCEALED ARM WALL CARRIER.
2. ALL EXPOSED P-TRAPS SHALL BE PROVIDED W/LAV SHIELDS.
3. PROVIDE BACKFLOW PREVENTER AT CONNECTION TO OWNER FURNISHED EQUIPMENT PER IPC.
4. PROVIDE AND INSTALL TRAP PRIMERS FOR ALL FLOOR DRAINS. TRAP PRIMER SUPPLY TO BE 1 1/4" CW OR SMALLER.
5. IN ADDITION TO SERVICE VALVES SHOWN ON PLANS, PROVIDE AND INSTALL ISOLATION VALVES ON HOT AND COLD WATER SUPPLY PIPING TO EACH PLUMBING FIXTURE, INCLUDING TRAP PRIMERS.
6. WATER HAMMER ARRESTORS TO BE ZURN SERIES Z-1700 OR EQUAL. SIZE AS INDICATED ON WATER RISER DIAGRAM. PROVIDE ACCESS TO ALL WATER HAMMER ARRESTORS THRU ACCESS PANELS, LAY-IN CEILINGS, WALL IN CHASE.
7. REFER TO ARCHITECTURAL DRAWINGS FOR ELEVATIONS OF FIXTURES.
8. P804 TO BE LOCATED IN WALL AT OFE ICE MAKERS. OWNER FURNISHED FILTER TO BE INSTALLED IN CASEWORK. ROUTE DRAIN PIPING FROM ICEMAKERS TO FLOOR DRAIN AS INDICATED ON PLANS.

ENVIRONMENTS FOR HEALTH ARCHITECTURE
e4h
868.781.8441 817.226.1917 801 Cherry St. Ste. 500, Fort Worth, TX 76102 e4harchitecture.com

© 2025 E4H - Environments For Health, LLC

exalt health

RYAN

ICT
I.C. Thomasson Associates, Inc.
A Salas O'Brien Company
2950 Kraft Drive
Nashville, TN 37204
PHONE 615-346-3400
https://www.ictthomasson.com/
ICT Project No. 2545-02546

FIRM CERTIFICATE OF AUTHORIZATION: CA-1276

ELECTRICAL ENGINEER
FLORIDA REGISTRATION:
JOSHUA R. CARTWRIGHT, P.E. #71893

MECHANICAL ENGINEER
FLORIDA REGISTRATION:
ZACHARY N. McCOY, P.E. #93060

EXALT HEALTH
40 BED REHAB HOSPITAL - PANAMA CITY BEACH
2851 HWY 77
PANAMA CITY, FLORIDA 32405

PROJECT: H002125

Δ	DATE	DESCRIPTION

NOT FOR CONSTRUCTION

ORIG SUBMISSION: 02/13/26
CURRENT:

SHEET TITLE AND NUMBER:

P0.01

PLUMBING - LEGENDS & SCHEDULES

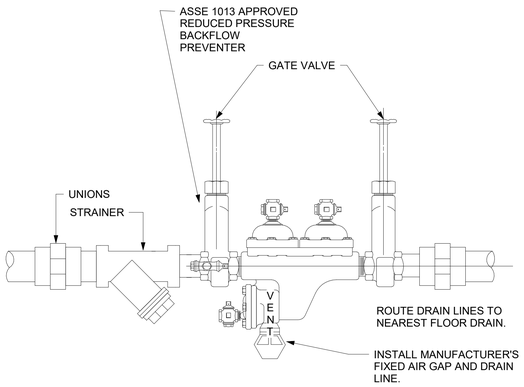

3/4" - 2" REDUCED PRESSURE BACKFLOW PREVENTER DETAIL
No Scale

1

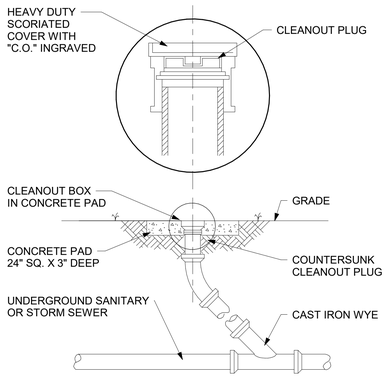

EXTERIOR CLEANOUT DETAIL
No Scale

2

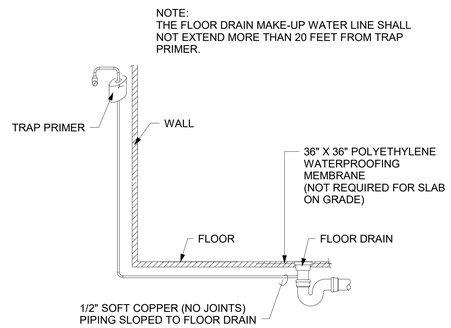

FLOOR DRAIN TRAP PRIMER DETAIL
No Scale

3

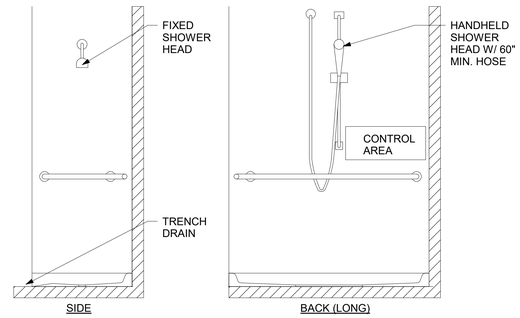

NOTE:

REFER TO ARCHITECTURAL ELEVATION DRAWINGS FOR DIMENSIONS.

ADA ROLL-IN SHOWER DETAIL
No Scale

4

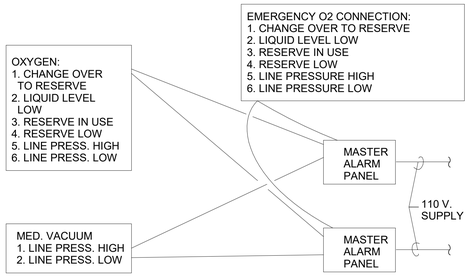

NOTE:
EACH ALARM POINT LISTED REQUIRES A STRANDED 18 GAUGE, SHIELDED TWISTED PAIR CABLE EQUAL TO BELDEN #8451 OR WEST PENN #452. ALL WIRING IN MIN. 3/4" CONDUIT. ALL WIRING AND CONDUIT BETWEEN THE MASTER ALARM PANELS AND THE SOURCES, AS SHOWN, SHALL BE PROVIDED BY AND INSTALLED BY THE ELECTRICAL CONTRACTOR. (REFER TO MEDICAL GAS DRAWINGS FOR ALL EQUIPMENT CONNECTIONS REQUIRED).

MEDICAL GAS MASTER ALARM PANEL WIRING SCHEMATIC
No Scale

5

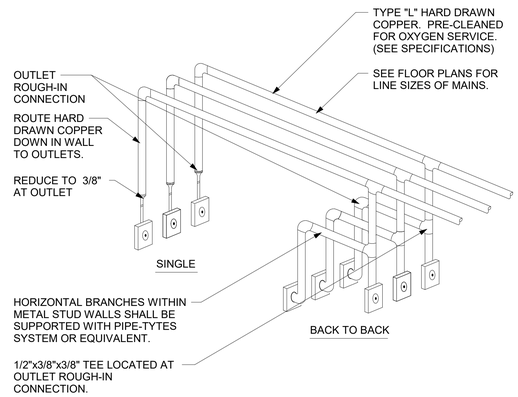

MEDICAL GAS PIPING AT OUTLETS
No Scale

6

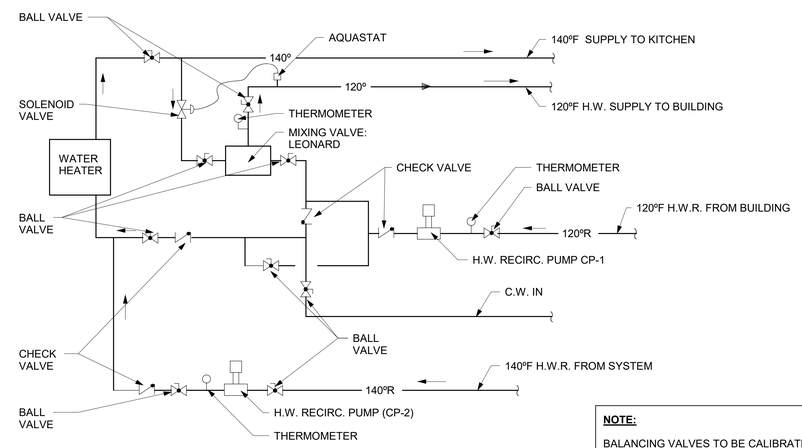

NOTE:

BALANCING VALVES TO BE CALIBRATED PER SPECIFIC VALVE MANUFACTURER'S PRINTED INSTRUCTIONS.

PIPING SCHEMATIC AT BUILDING MIXING VALVE
No Scale

7

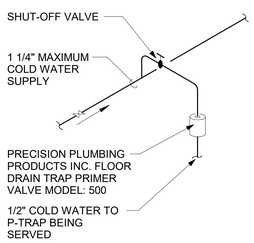

SINGLE TRAP PRIMER DETAIL
No Scale

8

PRIMER MODEL	NO. OF DRAINS	SUPPLY TUBE	DISTRIBUTION UNIT
P2-500	1	N/A	N/A
P2-500	2	N/A	DU-2
P1-500	3	N/A	DU-3
P1-500	4	N/A	DU-4
P1-500	5	YS-8	DU-2 & DU-3
P1-500	6	YS-8	DU-3 & DU-3
P1-500	7	YS-8	DU-3 & DU-4
P1-500	8	YS-8	DU-4 & DU-4

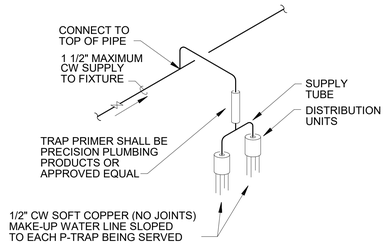

NOTE:
THE PRIMER ASSEMBLY SHALL BE INSTALLED LEVEL AND IN AN ACCESSIBLE LOCATION
THE PRIMER ASSEMBLY SHALL BE INSTALLED A MINIMUM OF ONE FOOT ABOVE FINISHED FLOOR FOR EVERY 20 FEET OF FLOOR DRAIN TRAP MAKE-UP WATER LINE.

TRAP PRIMER DETAIL
No Scale

9

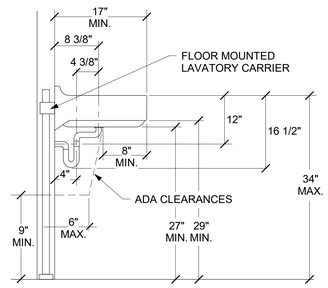

NOTE:
CONTRACTOR TO FIELD MODIFY P-TRAP AND OFFSET DRAIN TO EXACT SIZES AS SHOWN.

ACCESSIBLE LAVATORY INSTALLATION W/ CARRIER DETAIL
No Scale

10

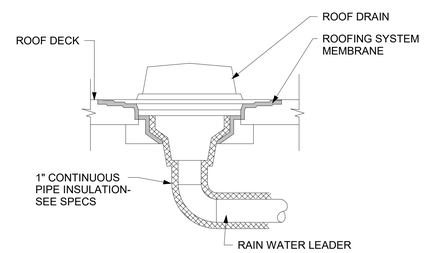

ROOF DRAIN INSULATION DETAIL
No Scale

11

ENVIRONMENTS FOR HEALTH ARCHITECTURE
e4h
817.228.1917 801 Cherry St. Ste. 500, Fort Worth, TX 76102
817.861.8441 e4harchitecture.com

© 2025 E4H - Environments For Health, LLC

exalt health

RYAN

ICT
I.C. Thomasson Associates, Inc.
A Salas O'Brien Company
2950 Kraft Drive
Nashville, TN 37204
PHONE 615-346-3400
https://www.ictthomasson.com/
ICT Project No. 2545-02546

FIRM CERTIFICATE OF AUTHORIZATION: CA-1276

ELECTRICAL ENGINEER
FLORIDA REGISTRATION:
JOSHUA R. CARTWRIGHT, P.E. #71893

MECHANICAL ENGINEER
FLORIDA REGISTRATION:
ZACHARY N. McCOY, P.E. #93060

EXALT HEALTH
40 BED REHAB HOSPITAL - PANAMA CITY BEACH
2851 HWY 77
PANAMA CITY, FLORIDA 32405

PROJECT: H002125

Δ	DATE	DESCRIPTION

NOT FOR CONSTRUCTION

ORIG SUBMISSION: 02/13/26
CURRENT:

SHEET TITLE AND NUMBER:

P0.02

PLUMBING - DETAILS

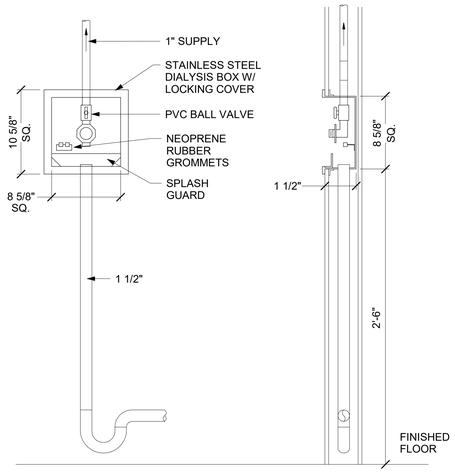

DIALYSIS BOX DETAIL 1
No Scale

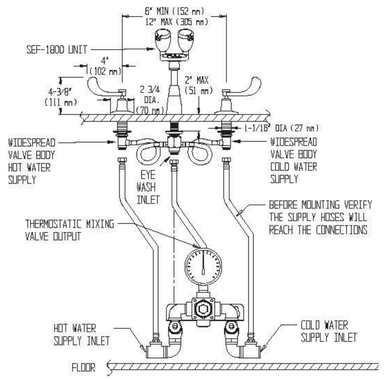

EYEWASH/FAUCET COMBINATION DETAIL 2
No Scale

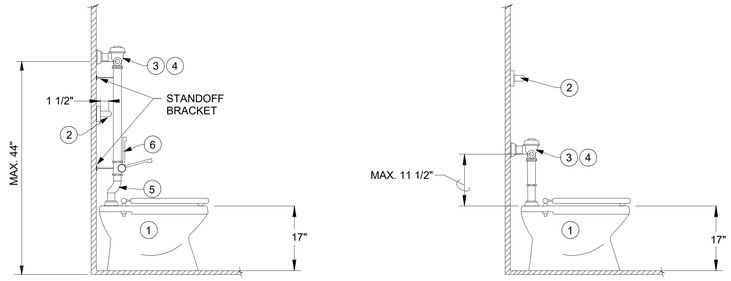

1. FLOOR MOUNTED WATER CLOSET. TOP OF SEAT SHALL BE 17"-19" IN CONFORMANCE WITH A.D.A. GUIDELINES.
2. HANDICAP GRAB BAR. MOUNT BETWEEN 33" AND 36" AFF. TO CONFORM WITH A.D.A. GUIDELINES.
3. FLUSH VALVE HANDLE : MOUNT @ A MAXIMUM OF 44" A.F.F.
4. HANDLE OF FLUSH VALVE SHALL BE MOUNTED ON WIDE SIDE OF ROOM.
5. PROVIDE OFFSET IN MAIN TUBE TO CLEAR GRAB BAR.
6. PROVIDE BED PAN WASHER WHICH ACCOMMODATES THE OFFSET MAIN TUBE.
7. FLUSH VALVE. MOUNT @ 27 5/8" TO CENTER OF HANDLE.

FLOOR MOUNTED ACCESSIBLE, WATER CLOSET DETAIL 3
No Scale

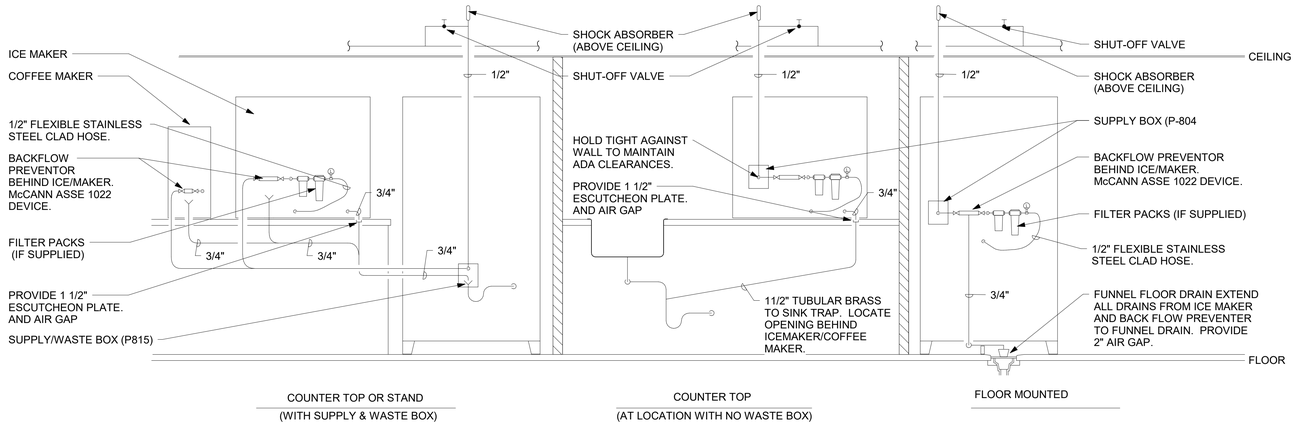

NOTE:
PROVIDE TRANSITION & FITTINGS AS REQUIRED TO CONNECT TO OWNER FURNISHED ICE MAKER / COFFEE MAKER. ROUTE ALL DRAINS TO INDIRECT WASTE RECEPTOR. ALL COMPONENTS TO BE BEHIND ICE MAKER OR COFFEE MAKER.
PIPING IN CABINET UNDER COUNTER TO BE TYPE-L COPPER

ICE MAKER/COFFEE MAKER CONNECTION DETAIL 4
No Scale

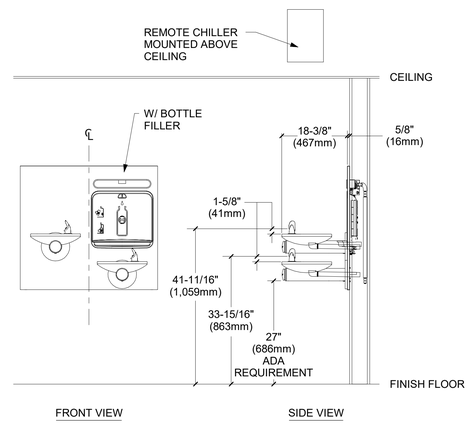

NOTE:
WHERE REAR ACCES PANELS CANNOT BE INSTALLED. PROVIDE FULL WIDTH FRONT ACCESS. PANEL TO BE 18 GAUGE, 300 SERIES HIGH SHINE LUSTEROUS FINISH TO MATCH WATER COOLER FINISH.

REMOTE COOLER DETAIL WITH BOTTLE FILLER 5
No Scale

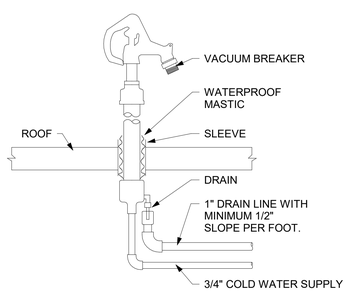

JOSAM 71400 WITH VACUUM BREAKER

HOSE HYDRANT ON ROOF DETAIL 6
No Scale

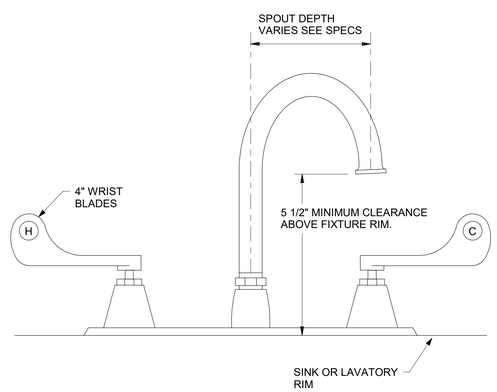

TYPICAL GOOSENECK FAUCET REQUIREMENTS 7
No Scale

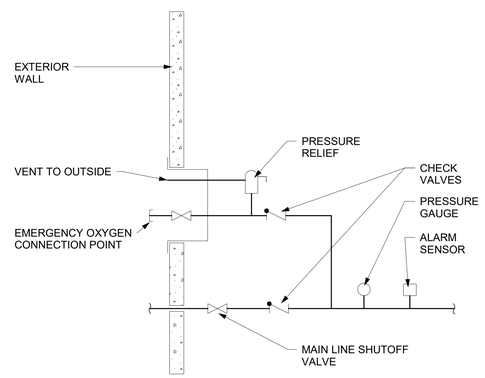

NOTE :
IF THE RELIEF VALVE ON THE EMERGENCY OXYGEN CONNECTION IS MOVED TO DOWNSTREAM FROM THE CHECK VALVE IN THE EMERGENCY OXYGEN LINE, CONNECT IT TO THE SYSTEM WITH A DEMAND CHECK VALVE.
[NFPA 99 FIGURE 4-3.1.1.8(H)]

EMERGENCY OXYGEN CONNECTION DETAIL 8
No Scale

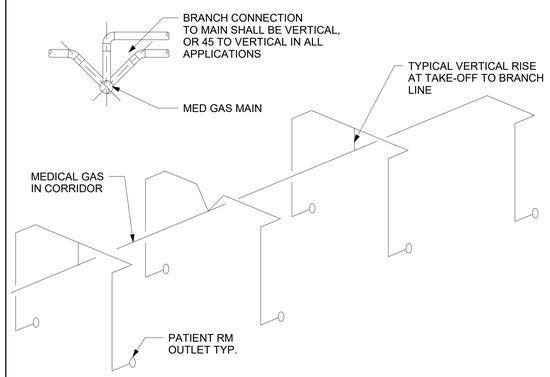

PATIENT ROOM AND CORRIDOR MEDICAL GAS MAINS DETAIL 9
No Scale

ENVIRONMENTS FOR HEALTH ARCHITECTURE
e4h
817.226.1917 801 Cherry St. Ste. 500, Fort Worth, TX 76102 e4harchitecture.com

© 2025 E4H - Environments For Health, LLC

exalt health

RYAN

I.C. Thomasson Associates, Inc.
A Salas O'Brien Company
2950 Kraft Drive
Nashville, TN 37204
PHONE 615-346-3400
https://www.ictthomasson.com/
ICT Project No. 2545-02546

FIRM CERTIFICATE OF AUTHORIZATION: CA-1276

ELECTRICAL ENGINEER
FLORIDA REGISTRATION:
JOSHUA R. CARTWRIGHT, P.E. #71893

MECHANICAL ENGINEER
FLORIDA REGISTRATION:
ZACHARY N. McCOY, P.E. #93060

EXALT HEALTH
40 BED REHAB HOSPITAL - PANAMA CITY BEACH
2851 HWY 77
PANAMA CITY, FLORIDA 32405
PROJECT: H002125

Δ	DATE	DESCRIPTION

NOT FOR CONSTRUCTION

ORIG SUBMISSION: 02/13/26
CURRENT:

SHEET TITLE AND NUMBER:

P0.03

PLUMBING - DETAILS

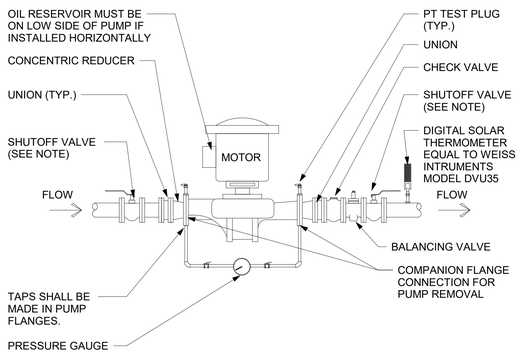

NOTE:

PROVIDE BALL VALVE FOR THIS APPLICATION.

IN-LINE CIRCULATING PUMP DETAIL 1
No Scale

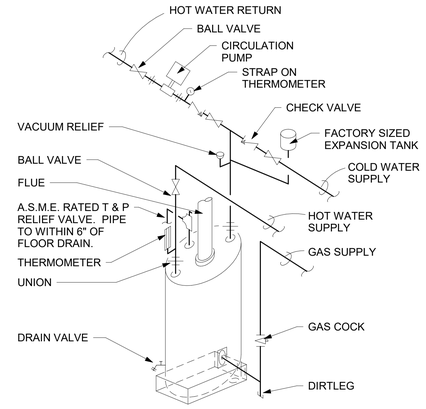

GAS WATER HEATER DETAIL WITH CIRCULATION PUMP AND DRAIN PAN 2
No Scale

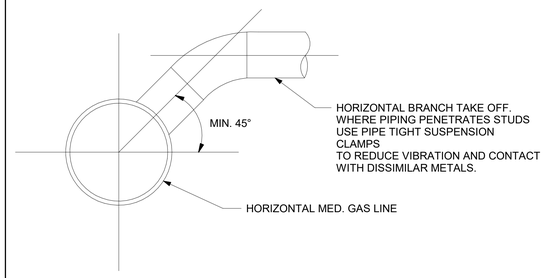

MEDICAL GAS HORIZONTAL BRANCH TAKEOFF 3
No Scale

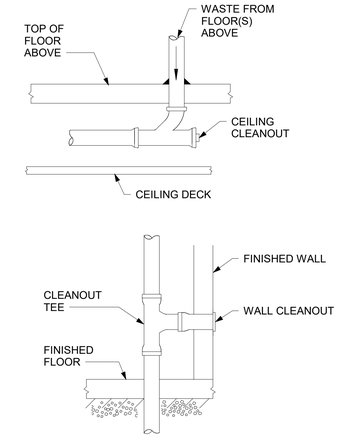

BASE OF RISER CLEANOUT DETAIL 4
No Scale

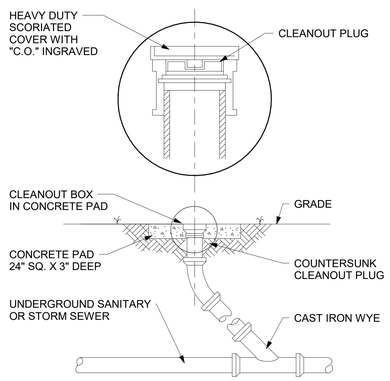

EXTERIOR CLEANOUT DETAIL 5
No Scale

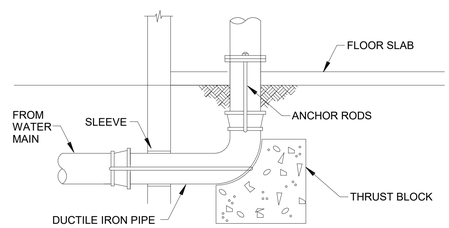

LEAD IN DETAIL 6
No Scale

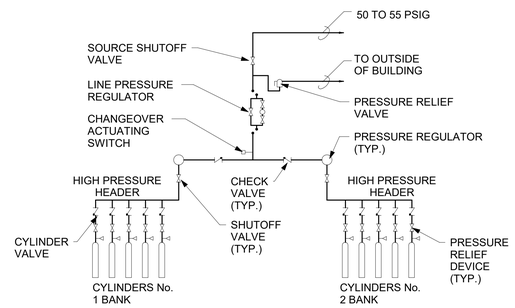

NOTE:
VERIFY NUMBER OF CYLINDERS FOR EACH GAS SERVICE.

(TYPICAL FOR OXYGEN)

TANK CYLINDER MANIFOLD PIPING SCHEMATIC 7
No Scale

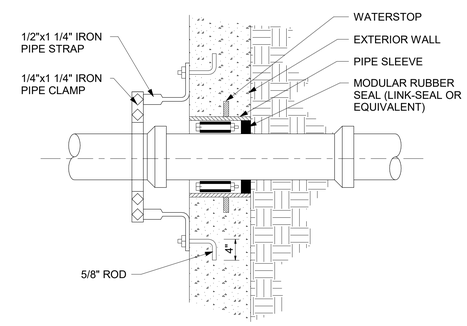

PIPE PENETRATION AT FOUNDATION WALL 8
No Scale

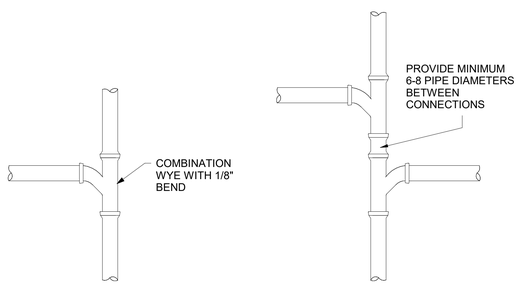

SINGLE INLET CONNECTION **DOUBLE INLET CONNECTION**

SANITARY PIPE CONNECTION DETAIL 9
No Scale

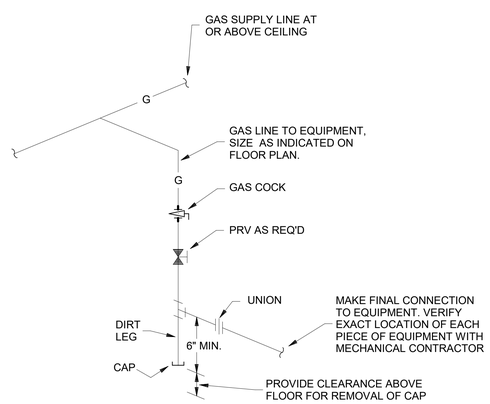

TYPICAL GAS CONNECTION DETAIL 10
No Scale

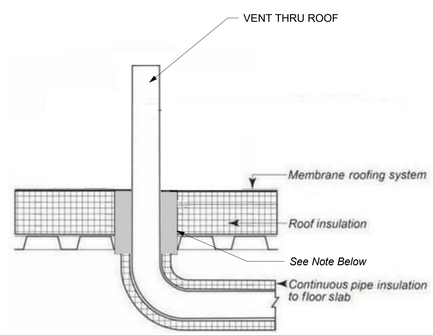

PACKING MATERIAL - MIN 1 IN. (25MM) THICKNESS OF FIRMLY PACKED MINERAL WOOL BATT INSULATION USED AS A PERMANENT FORM. PACKING MATERIAL TO BE RECESSED FROM TOP SURFACE OF FLOOR OR SLEEVE OR FROM BOTH SURFACES OF WALL AS REQUIRED TO ACCOMMODATE THE REQUIRED THICKNESS OF CAULK FILL MATERIAL (ITEM B)

PLUMBING VTR INSULATION DETAIL 11
No Scale

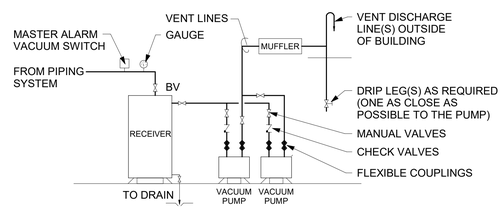

VACUUM PUMP PIPING SCHEMATIC 12
No Scale

ENVIRONMENTS FOR HEALTH ARCHITECTURE
e4h
817.226.1917 801 Cherry St. Ste. 500, Fort Worth, TX 76102
888.781.8441 e4harchitecture.com

© 2025 E4H - Environments For Health, LLC

exalt health

RYAN

I.C. Thomasson Associates, Inc.
A Salas O'Brien Company
2950 Kraft Drive
Nashville, TN 37204
PHONE 615-346-3400
https://www.ictthomasson.com/
ICT Project No. 2545-02546

FIRM CERTIFICATE OF AUTHORIZATION: CA-1276

ELECTRICAL ENGINEER
FLORIDA REGISTRATION:
JOSHUA R. CARTWRIGHT, P.E. #71893

MECHANICAL ENGINEER
FLORIDA REGISTRATION:
ZACHARY N. McCOY, P.E. #93060

EXALT HEALTH
40 BED REHAB HOSPITAL - PANAMA CITY BEACH
2851 HWY 77
PANAMA CITY, FLORIDA 32405

PROJECT: H002125

Δ	DATE	DESCRIPTION

NOT FOR CONSTRUCTION

ORIG SUBMISSION: 02/13/26
CURRENT:

SHEET TITLE AND NUMBER:

P0.04

PLUMBING - DETAILS

THE LINE SHOWN ABOVE IS EXACTLY ONE HUNDRED ATTACHED SHEETS

THE LINE SHOWN ABOVE IS EXACTLY ONE HORIZONTAL INCH ON ORIGINAL ARCHITECTURAL PLANS

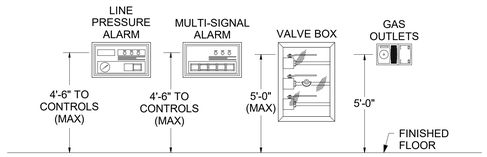

WALL UNITS

MEDICAL GAS MOUNTING HEIGHT DETAIL

No Scale

2

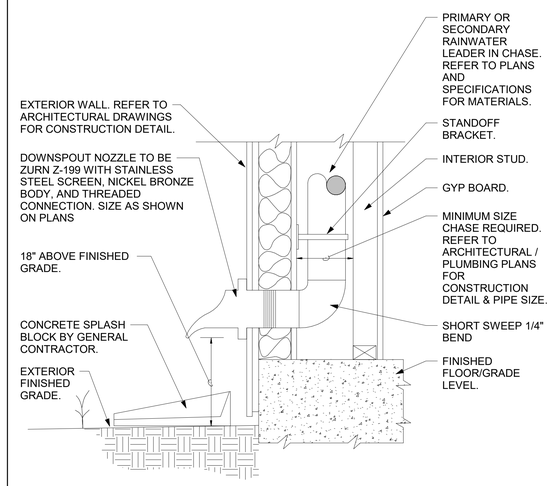

CONCEALED DOWNSPOUT NOZZLE DETAIL

No Scale

5

ENVIRONMENTS FOR HEALTH ARCHITECTURE
e4h
888.781.8441 817.229.1917 801 Cherry St. Ste. 500, Fort Worth, TX 76102 e4harchitecture.com

© 2025 E4H - Environments For Health, LLC

exalt health

RYAN

ICT

I.C. Thomasson Associates, Inc.
A Salas O'Brien Company
2950 Kraft Drive
Nashville, TN 37204
PHONE 615-346-3400
https://www.ictthomasson.com/
ICT Project No. 2545-02546

FIRM CERTIFICATE OF AUTHORIZATION: CA-1276

ELECTRICAL ENGINEER
FLORIDA REGISTRATION:
JOSHUA R. CARTWRIGHT, P.E. #71893

MECHANICAL ENGINEER
FLORIDA REGISTRATION:
ZACHARY N. McCOY, P.E. #93060

EXALT HEALTH
40 BED REHAB HOSPITAL - PANAMA CITY BEACH

2851 HWY 77
PANAMA CITY, FLORIDA 32405

PROJECT: H002125

Δ	DATE	DESCRIPTION

NOT FOR CONSTRUCTION

ORIG SUBMISSION: 02/13/26
CURRENT:

SHEET TITLE AND NUMBER:

P0.05

PLUMBING - DETAILS

THE LINE SHOWN ABOVE IS EXACTLY ONE INCH ON ALL PLANS

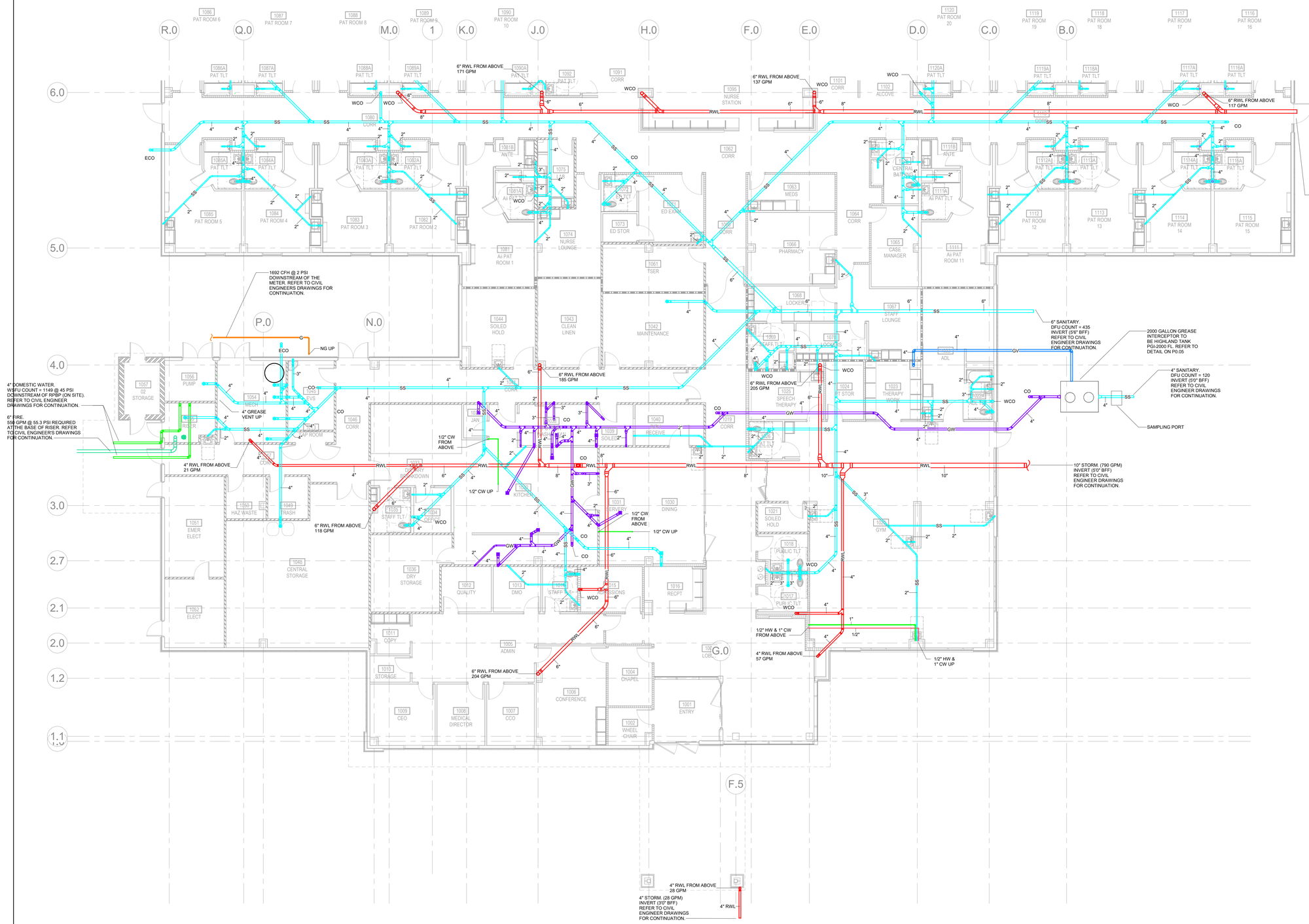

1 P1.01a PLUMBING - UNDERGROUND PLAN - AREA A
1/8" = 1'-0"

TRUE NORTH PROJECT NORTH

GENERAL NEW CONSTRUCTION NOTES

1. CONTRACTOR SHALL PAY ALL FEES AND CHARGES REQUIRED TO ACHIEVE THE INSTALLATION.

2. CONTRACTOR SHALL LOCATE NEW EQUIPMENT AND ROUTE NEW PIPING TO AVOID CONFLICTS AND INTERFERENCES WITH FIELD CONDITIONS. FINAL COORDINATION WITH OTHER TRADES IS THE RESPONSIBILITY OF THE CONTRACTOR.

3. DRAWINGS ARE DIAGRAMMATIC AND INDICATE GENERAL ARRANGEMENT OF SYSTEMS. DRAWINGS SHALL NOT BE SCALED.

4.COORDINATE WITH GENERAL CONTRACTOR THE PATCHING OF FLOORS TO ACCOMMODATE NEW PIPING.

5. PROVIDE TRAP PRIMER CONNECTION AND TRAP PRIMER TO SERVE ALL FLOOR DRAINS.

6. FIRESTOP ALL PENETRATIONS THROUGH RATED WALL AND FLOORS.

7. INSTALL CLEANOUTS AT BASE OF ALL SANITARY AND STORM STACKS, AT ALL CHANGE IN DIRECTIONS GREATER THAN 45° AND IN STRAIGHT RUNS AT LEAST EVERY 50 FT.

8.EXTEND DRAIN PIPING FROM REDUCED PRESSURE BACKFLOW PREVENTER TO FLOOR DRAIN THE RPBP SERVES.

9. ALL EXPOSED WATER PIPING IN FINISHED SPACES TO BE CHROME PLATED.

10. ALL PLUMBING FIXTURES TO BE SEALED AT FLOOR OR WALL USING SANITARY SEALANT APPROVED FOR THE PURPOSE.

11. ALL PLUMBING, MEDICAL GAS AND FIRE PROTECTION EQUIPMENT TO BE INSTALLED ON 6" CONCRETE HOUSEKEEPING PAD.

PIPING EXCLUSION ZONE LEGEND

NO PIPING OR EQUIPMENT NOT SERVING AREA ALLOWED ABOVE THIS AREA.

ENVIRONMENTS FOR HEALTH ARCHITECTURE
e4h
888.781.8441 817.229.1917 801 Cherry St. Ste. 500, Fort Worth, TX 76102 e4harchitecture.com

© 2025 E4H - Environments For Health, LLC

exalt health

RYAN

I.C. Thomasson Associates, Inc.
A Salas O'Brien Company
2950 Kraft Drive
Nashville, TN 37204
PHONE 615-346-3400
https://www.ictthomasson.com/
ICT Project No. 2545-02546

FIRM CERTIFICATE OF AUTHORIZATION: CA-1276

ELECTRICAL ENGINEER
FLORIDA REGISTRATION:
JOSHUA R. CARTWRIGHT, P.E. #71893

MECHANICAL ENGINEER
FLORIDA REGISTRATION:
ZACHARY N. McCOY, P.E. #93060

EXALT HEALTH
40 BED REHAB HOSPITAL - PANAMA CITY BEACH
2851 HWY 77
PANAMA CITY, FLORIDA 32405

PROJECT: H002125

Δ	DATE	DESCRIPTION

KEY PLAN:

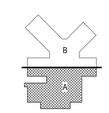

NOT FOR CONSTRUCTION

ORIG SUBMISSION: 02/13/26
CURRENT:

SHEET TITLE AND NUMBER:

P1.01a

UNDERGROUND - FLOOR PLAN - LEVEL 1 - AREA A

THE LINE SHOWN ABOVE IS EXACTLY ONE HORIZONTAL INCH ON ORIGINAL ARCHITECTURAL PLANS

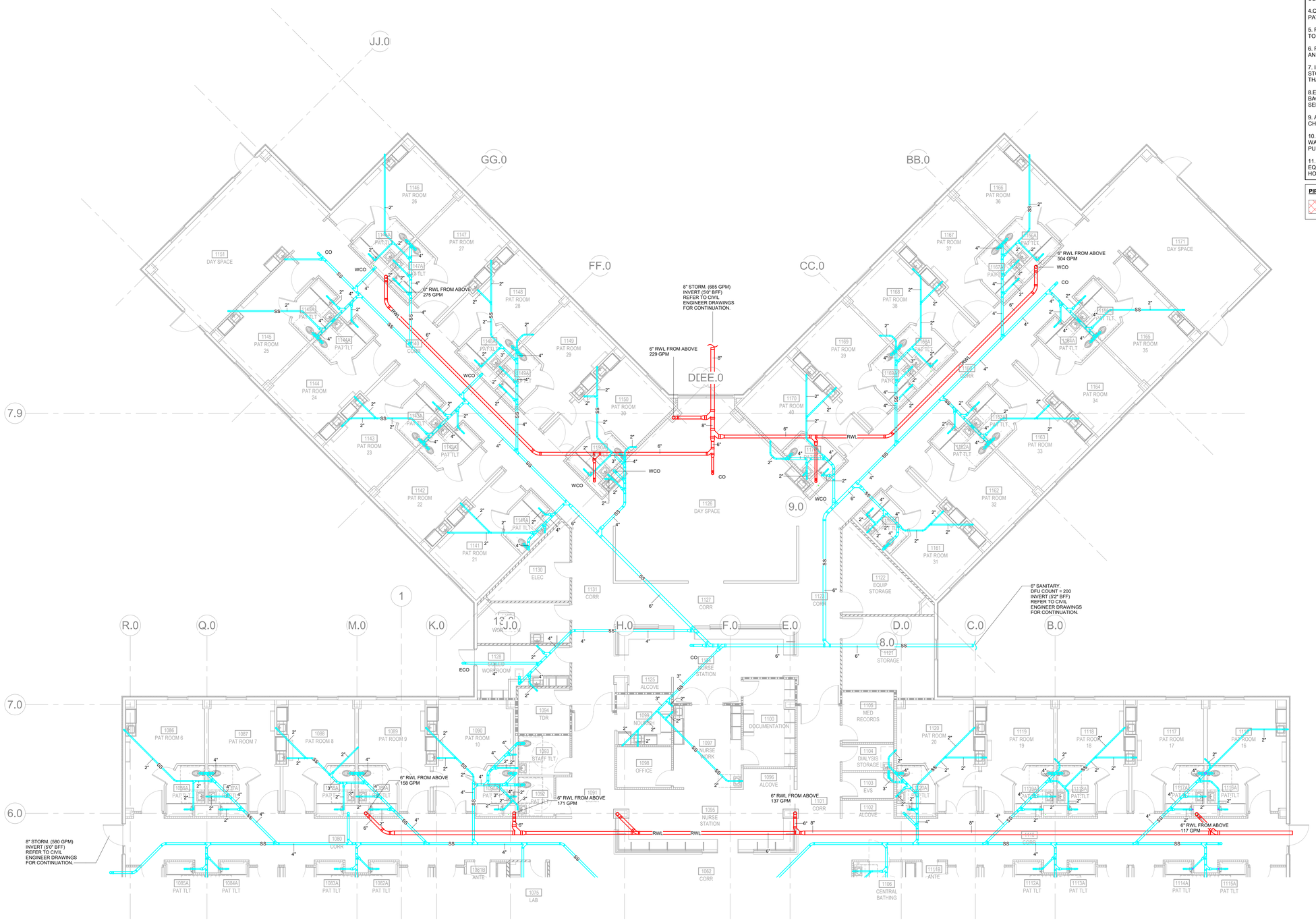

1 P1.01b PLUMBING - UNDERGROUND PLAN - AREA B
1/8" = 1'-0"

TRUE NORTH
PROJECT NORTH

BUILDING ELEMENTS

- NON-RATED WALL
- PARTITION CONSTRUCTED TO RESIST THE PASSAGE OF SMOKE
- 1 HR FIRE RATED BARRIER
- 1 HR FIRE RATED SMOKE BARRIER (SMOKE COMPARTMENT WALL)

GENERAL NEW CONSTRUCTION NOTES

1. CONTRACTOR SHALL PAY ALL FEES AND CHARGES REQUIRED TO ACHIEVE THE INSTALLATION.

2. CONTRACTOR SHALL LOCATE NEW EQUIPMENT AND ROUTE NEW PIPING TO AVOID CONFLICTS AND INTERFERENCES WITH FIELD CONDITIONS. FINAL COORDINATION WITH OTHER TRADES IS THE RESPONSIBILITY OF THE CONTRACTOR.

3. DRAWINGS ARE DIAGRAMMATIC AND INDICATE GENERAL ARRANGEMENT OF SYSTEMS. DRAWINGS SHALL NOT BE SCALED.

4.COORDINATE WITH GENERAL CONTRACTOR THE PATCHING OF FLOORS TO ACCOMMODATE NEW PIPING.

5. PROVIDE TRAP PRIMER CONNECTION AND TRAP PRIMER TO SERVE ALL FLOOR DRAINS.

6. FIRESTOP ALL PENETRATIONS THROUGH RATED WALL AND FLOORS.

7. INSTALL CLEANOUTS AT BASE OF ALL SANITARY AND STORM STACKS, AT ALL CHANGE IN DIRECTIONS GREATER THAN 45° AND IN STRAIGHT RUNS AT LEAST EVERY 50 FT.

8.EXTEND DRAIN PIPING FROM REDUCED PRESSURE BACKFLOW PREVENTER TO FLOOR DRAIN THE RPBP SERVES.

9. ALL EXPOSED WATER PIPING IN FINISHED SPACES TO BE CHROME PLATED.

10. ALL PLUMBING FIXTURES TO BE SEALED AT FLOOR OR WALL USING SANITARY SEALANT APPROVED FOR THE PURPOSE.

11. ALL PLUMBING, MEDICAL GAS AND FIRE PROTECTION EQUIPMENT TO BE INSTALLED ON 6" CONCRETE HOUSEKEEPING PAD.

PIPING EXCLUSION ZONE LEGEND

NO PIPING OR EQUIPMENT NOT SERVING AREA ALLOWED ABOVE THIS AREA.

ENVIRONMENTS FOR HEALTH ARCHITECTURE
e4h
817.229.1917 801 Cherry St. Ste. 500, Fort Worth, TX 76102
817.861.8441 e4harchitecture.com

© 2025 E4H - Environments For Health, LLC

exalt health

RYAN

ICT
I.C. Thomasson Associates, Inc.
A Salas O'Brien Company
2950 Kraft Drive
Nashville, TN 37204
PHONE 615-346-3400
https://www.ictthomasson.com/
ICT Project No. 2545-02546

FIRM CERTIFICATE OF AUTHORIZATION: CA-1276

ELECTRICAL ENGINEER
FLORIDA REGISTRATION:
JOSHUA R. CARTWRIGHT, P.E. #71893

MECHANICAL ENGINEER
FLORIDA REGISTRATION:
ZACHARY N. McCOY, P.E. #93060

EXALT HEALTH 40 BED REHAB HOSPITAL - PANAMA CITY BEACH

2851 HWY 77
PANAMA CITY, FLORIDA 32405

PROJECT: H002125

Δ	DATE	DESCRIPTION

KEY PLAN:

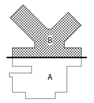

NOT FOR CONSTRUCTION

ORIG SUBMISSION: 02/13/26

CURRENT:

SHEET TITLE AND NUMBER:

P1.01b

UNDERGROUND - FLOOR PLAN - LEVEL 1 - AREA B

THE LINE SHOWN ABOVE IS EXACTLY ONE HORIZONTAL INCH ON ORIGINAL ARCHITECT'S DRAWINGS

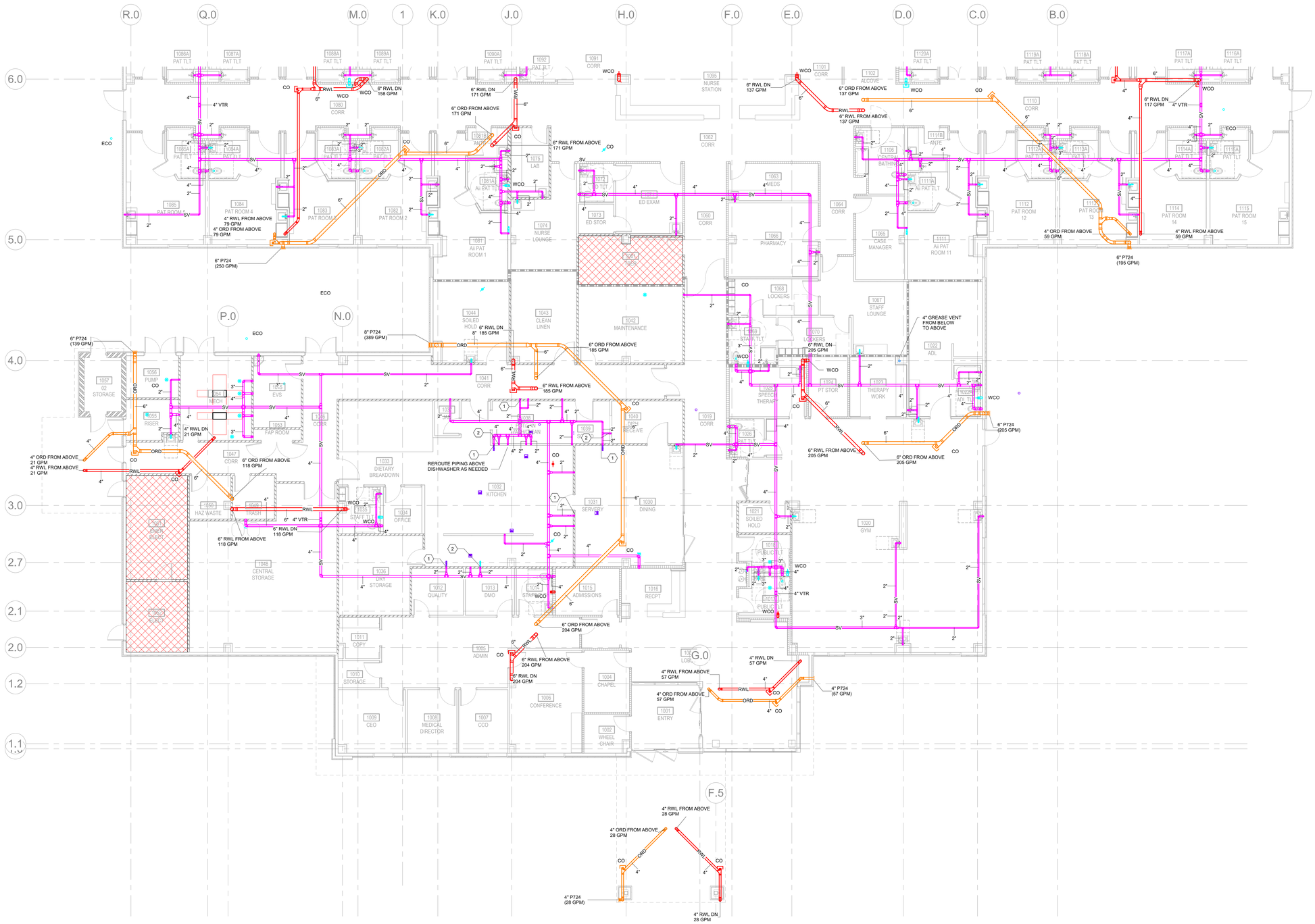

1 P2.01a SANITARY - LEVEL 1 - AREA A
1/8" = 1'-0"

TRUE NORTH PROJECT NORTH

GENERAL NEW CONSTRUCTION NOTES

1. CONTRACTOR SHALL PAY ALL FEES AND CHARGES REQUIRED TO ACHIEVE THE INSTALLATION.

2. CONTRACTOR SHALL LOCATE NEW EQUIPMENT AND ROUTE NEW PIPING TO AVOID CONFLICTS AND INTERFERENCES WITH FIELD CONDITIONS. FINAL COORDINATION WITH OTHER TRADES IS THE RESPONSIBILITY OF THE CONTRACTOR.

3. DRAWINGS ARE DIAGRAMMATIC AND INDICATE GENERAL ARRANGEMENT OF SYSTEMS. DRAWINGS SHALL NOT BE SCALED.

4.COORDINATE WITH GENERAL CONTRACTOR THE PATCHING OF FLOORS TO ACCOMMODATE NEW PIPING.

5. PROVIDE TRAP PRIMER CONNECTION AND TRAP PRIMER TO SERVE ALL FLOOR DRAINS.

6. FIRESTOP ALL PENETRATIONS THROUGH RATED WALL AND FLOORS.

7. INSTALL CLEANOUTS AT BASE OF ALL SANITARY AND STORM STACKS, AT ALL CHANGE IN DIRECTIONS GREATER THAN 45° AND IN STRAIGHT RUNS AT LEAST EVERY 50 FT.

8.EXTEND DRAIN PIPING FROM REDUCED PRESSURE BACKFLOW PREVENTER TO FLOOR DRAIN THE RPBP SERVES.

9. ALL EXPOSED WATER PIPING IN FINISHED SPACES TO BE CHROME PLATED.

10. ALL PLUMBING FIXTURES TO BE SEALED AT FLOOR OR WALL USING SANITARY SEALANT APPROVED FOR THE PURPOSE.

11. ALL PLUMBING, MEDICAL GAS AND FIRE PROTECTION EQUIPMENT TO BE INSTALLED ON 6" CONCRETE HOUSEKEEPING PAD.

PIPING EXCLUSION ZONE LEGEND

NO PIPING OR EQUIPMENT NOT SERVING AREA ALLOWED ABOVE THIS AREA.

VTR NOTE

CONTRACTOR SHALL OFFSET ALL VENTS THRU ROOF AS REQUIRED TO MAINTAIN 25'-0" MIN. SEPARATION FROM ROOF TOP UNIT FRESH AIR INTAKE.

KITCHEN SANITARY KEYNOTES

1. 1 1/2" SS TO SERVE HAND SINK
2. 2" SS TO SERVE DISPOSER

ENVIRONMENTS FOR HEALTH ARCHITECTURE
e4h
817.228.1917 801 Cherry St. Ste. 500, Fort Worth, TX 76102
817.781.8441 e4harchitecture.com

© 2025 E4H - Environments For Health, LLC

exalt health

RYAN

ICT
I.C. Thomasson Associates, Inc.
A Salas O'Brien Company
2950 Kraft Drive
Nashville, TN 37204
PHONE 615-346-3400
https://www.ictthomasson.com/
ICT Project No. 2545-02546

FIRM CERTIFICATE OF AUTHORIZATION: CA-1276

ELECTRICAL ENGINEER
FLORIDA REGISTRATION:
JOSHUA R. CARTWRIGHT, P.E. #71893

MECHANICAL ENGINEER
FLORIDA REGISTRATION:
ZACHARY N. McCOY, P.E. #93060

EXALT HEALTH
40 BED REHAB HOSPITAL - PANAMA CITY BEACH
2851 HWY 77
PANAMA CITY, FLORIDA 32405

PROJECT: H002125

Δ	DATE	DESCRIPTION

KEY PLAN:

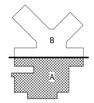

NOT FOR CONSTRUCTION

ORIG SUBMISSION: 02/13/26
CURRENT:

SHEET TITLE AND NUMBER:

P2.01a

SANITARY - FLOOR PLAN - LEVEL 1 - AREA A

THE LINE SHOWN ABOVE IS EXACTLY ONE HORIZONTAL INCH ON ORIGINAL ARCHITECT'S DRAWINGS

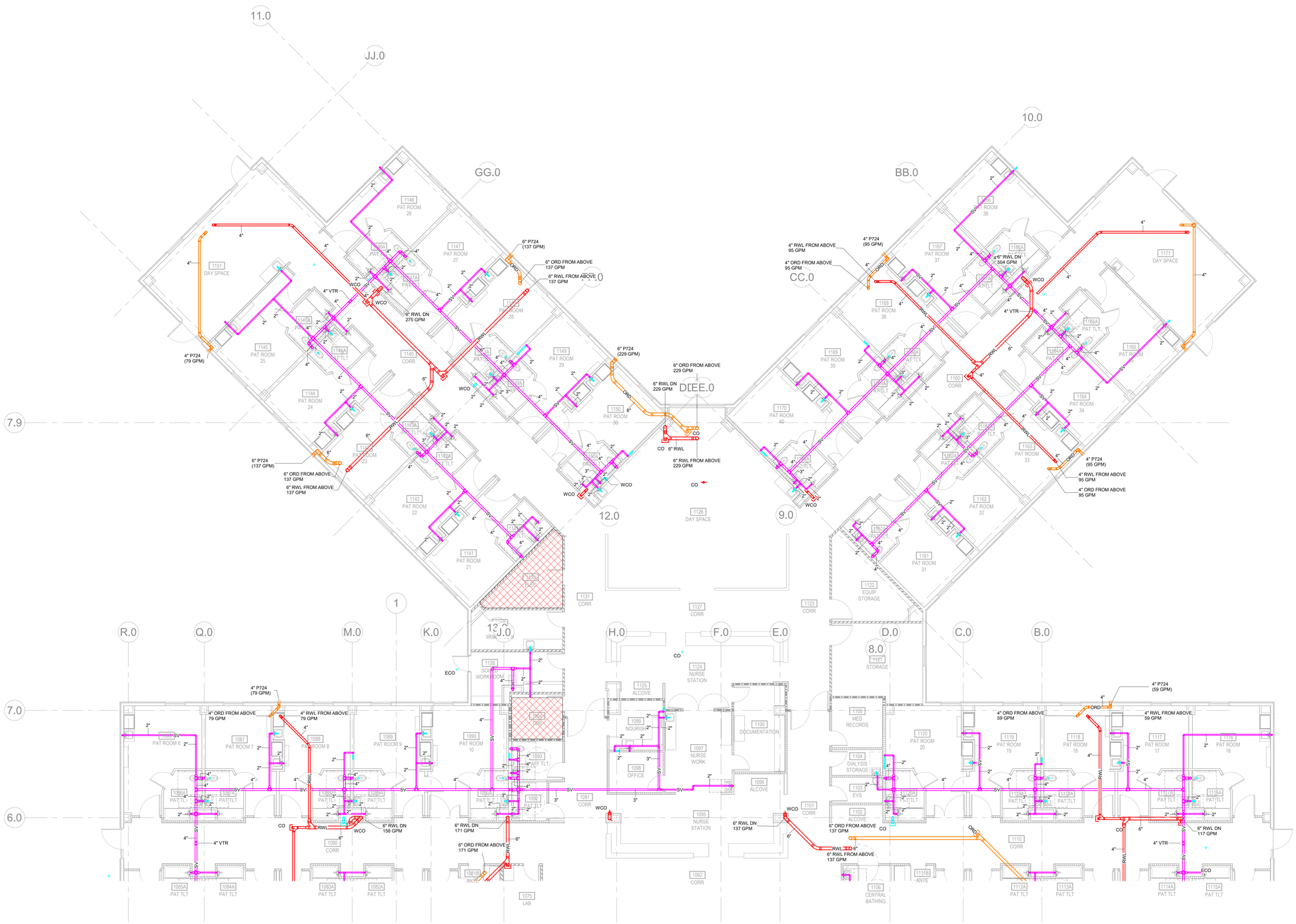

1 P2.01b SANITARY - LEVEL 1 - AREA B
1/8" = 1'-0"

TRUE NORTH
PROJECT NORTH

GENERAL NEW CONSTRUCTION NOTES

1. CONTRACTOR SHALL PAY ALL FEES AND CHARGES REQUIRED TO ACHIEVE THE INSTALLATION.

2. CONTRACTOR SHALL LOCATE NEW EQUIPMENT AND ROUTE NEW PIPING TO AVOID CONFLICTS AND INTERFERENCES WITH FIELD CONDITIONS. FINAL COORDINATION WITH OTHER TRADES IS THE RESPONSIBILITY OF THE CONTRACTOR.

3. DRAWINGS ARE DIAGRAMMATIC AND INDICATE GENERAL ARRANGEMENT OF SYSTEMS. DRAWINGS SHALL NOT BE SCALED.

4.COORDINATE WITH GENERAL CONTRACTOR THE PATCHING OF FLOORS TO ACCOMMODATE NEW PIPING.

5. PROVIDE TRAP PRIMER CONNECTION AND TRAP PRIMER TO SERVE ALL FLOOR DRAINS.

6. FIRESTOP ALL PENETRATIONS THROUGH RATED WALL AND FLOORS.

7. INSTALL CLEANOUTS AT BASE OF ALL SANITARY AND STORM STACKS, AT ALL CHANGE IN DIRECTIONS GREATER THAN 45° AND IN STRAIGHT RUNS AT LEAST EVERY 50 FT.

8.EXTEND DRAIN PIPING FROM REDUCED PRESSURE BACKFLOW PREVENTER TO FLOOR DRAIN THE RPBP SERVES.

9. ALL EXPOSED WATER PIPING IN FINISHED SPACES TO BE CHROME PLATED.

10. ALL PLUMBING FIXTURES TO BE SEALED AT FLOOR OR WALL USING SANITARY SEALANT APPROVED FOR THE PURPOSE.

11. ALL PLUMBING, MEDICAL GAS AND FIRE PROTECTION EQUIPMENT TO BE INSTALLED ON 6" CONCRETE HOUSEKEEPING PAD.

PIPING EXCLUSION ZONE LEGEND

NO PIPING OR EQUIPMENT NOT SERVING AREA ALLOWED ABOVE THIS AREA.

VTR NOTE

CONTRACTOR SHALL OFFSET ALL VENTS THRU ROOF AS REQUIRED TO MAINTAIN 25'-0" MIN. SEPARATION FROM ROOF TOP UNIT FRESH AIR INTAKE.

ENVIRONMENTS FOR HEALTH ARCHITECTURE
e4h
817.226.1917 801 Cherry St. Ste. 500, Fort Worth, TX 76102
817.781.8441 e4harchitecture.com

© 2025 E4H - Environments For Health, LLC

exalt health

RYAN

ICT
I.C. Thomasson Associates, Inc.
A Salas O'Brien Company
2950 Kraft Drive
Nashville, TN 37204
PHONE 615-346-3400
https://www.ictthomasson.com/
ICT Project No. 2545-02546

FIRM CERTIFICATE OF AUTHORIZATION: CA-1276

ELECTRICAL ENGINEER
FLORIDA REGISTRATION:
JOSHUA R. CARTWRIGHT, P.E. #71893

MECHANICAL ENGINEER
FLORIDA REGISTRATION:
ZACHARY N. McCOY, P.E. #93060

EXALT HEALTH
40 BED REHAB HOSPITAL - PANAMA CITY BEACH
2851 HWY 77
PANAMA CITY, FLORIDA 32405

PROJECT: H002125

Δ	DATE	DESCRIPTION

KEY PLAN:

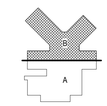

NOT FOR CONSTRUCTION

ORIG SUBMISSION: 02/13/26
CURRENT:

SHEET TITLE AND NUMBER:

P2.01b

SANITARY - FLOOR PLAN - LEVEL 1 - AREA B

THE LINE SHOWN ABOVE IS EXACTLY ONE INCH ON ALL ARCHITECTURAL PLAN SHEETS

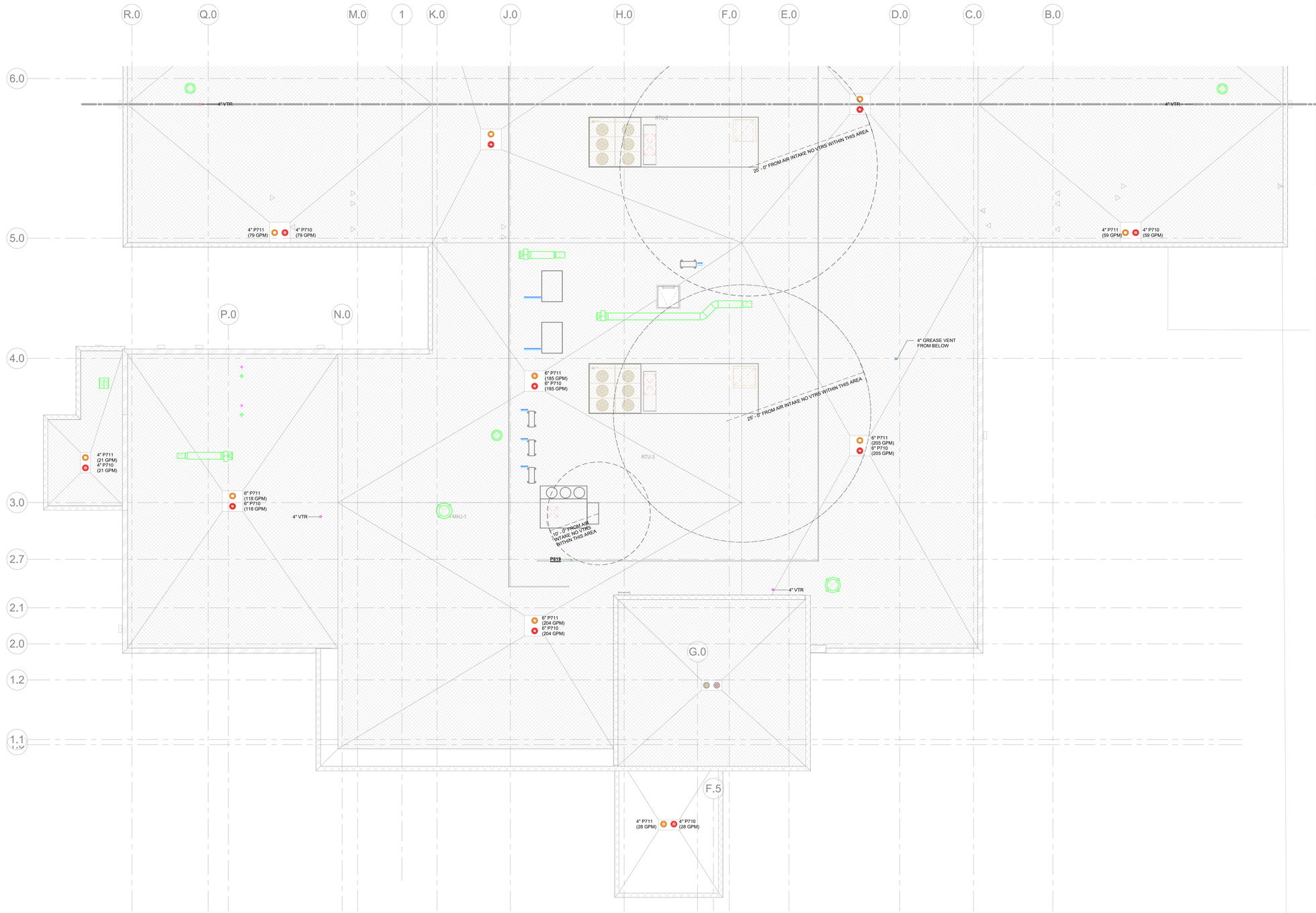

1 P2.02a SANITARY - ROOF PLAN - AREA A
1/8" = 1'-0"

TRUE NORTH
PROJECT NORTH

GENERAL NEW CONSTRUCTION NOTES

1. CONTRACTOR SHALL PAY ALL FEES AND CHARGES REQUIRED TO ACHIEVE THE INSTALLATION.

2. CONTRACTOR SHALL LOCATE NEW EQUIPMENT AND ROUTE NEW PIPING TO AVOID CONFLICTS AND INTERFERENCES WITH FIELD CONDITIONS. FINAL COORDINATION WITH OTHER TRADES IS THE RESPONSIBILITY OF THE CONTRACTOR.

3. DRAWINGS ARE DIAGRAMMATIC AND INDICATE GENERAL ARRANGEMENT OF SYSTEMS. DRAWINGS SHALL NOT BE SCALED.

4.COORDINATE WITH GENERAL CONTRACTOR THE PATCHING OF FLOORS TO ACCOMMODATE NEW PIPING.

5. PROVIDE TRAP PRIMER CONNECTION AND TRAP PRIMER TO SERVE ALL FLOOR DRAINS.

6. FIRESTOP ALL PENETRATIONS THROUGH RATED WALL AND FLOORS.

7. INSTALL CLEANOUTS AT BASE OF ALL SANITARY AND STORM STACKS, AT ALL CHANGE IN DIRECTIONS GREATER THAN 45° AND IN STRAIGHT RUNS AT LEAST EVERY 50 FT.

8.EXTEND DRAIN PIPING FROM REDUCED PRESSURE BACKFLOW PREVENTER TO FLOOR DRAIN THE RPBP SERVES.

9. ALL EXPOSED WATER PIPING IN FINISHED SPACES TO BE CHROME PLATED.

10. ALL PLUMBING FIXTURES TO BE SEALED AT FLOOR OR WALL USING SANITARY SEALANT APPROVED FOR THE PURPOSE.

11. ALL PLUMBING, MEDICAL GAS AND FIRE PROTECTION EQUIPMENT TO BE INSTALLED ON 6" CONCRETE HOUSEKEEPING PAD.

PIPING EXCLUSION ZONE LEGEND

NO PIPING OR EQUIPMENT NOT SERVING AREA ALLOWED ABOVE THIS AREA.

VTR NOTE

CONTRACTOR SHALL OFFSET ALL VENTS THRU ROOF AS REQUIRED TO MAINTAIN 25'-0" MIN. SEPARATION FROM ROOF TOP UNIT FRESH AIR INTAKE.

Rainwater Drain

P NO.	Mark	Outlet Size	Flow	Size Check
P710	571	6	229.19 GPM	Correct
P710	557	6	204.89 GPM	Correct
P710	555	6	203.94 GPM	Correct
P710	590	6	185.45 GPM	Correct
P710	565	6	170.87 GPM	Correct
P710	578	6	137.25 GPM	Correct
P710		6	137.25 GPM	Correct
P710	567	6	136.67 GPM	Correct
P710	559	6	118.17 GPM	Correct
P710	573	4	94.5 GPM	Correct
P710		4	94.5 GPM	Correct
P710	563	4	78.75 GPM	Correct
P710		4	78.75 GPM	Correct
P710		4	78.75 GPM	Correct
P710		4	78.75 GPM	Correct
P710	569	4	58.5 GPM	Correct
P710		4	58.5 GPM	Correct
P710	584	4	56.84 GPM	Correct
P710	582	4	28.31 GPM	Correct
P710	561	4	21.11 GPM	Correct
Grand total			2250.9 GPM	

ENVIRONMENTS FOR HEALTH ARCHITECTURE
e4h
817.229.1917 | 801 Cherry St. Ste. 500, Fort Worth, TX 76102
817.861.8441 | e4harchitecture.com

© 2025 E4H - Environments For Health, LLC

exalt health

RYAN

ICT
I.C. Thomasson Associates, Inc.
A Salas O'Brien Company
2950 Kraft Drive
Nashville, TN 37204
PHONE 615-346-3400
https://www.ictthomasson.com/
ICT Project No. 2545-02546

FIRM CERTIFICATE OF AUTHORIZATION: CA-1276

ELECTRICAL ENGINEER
FLORIDA REGISTRATION:
JOSHUA R. CARTWRIGHT, P.E. #71893

MECHANICAL ENGINEER
FLORIDA REGISTRATION:
ZACHARY N. McCOY, P.E. #93060

EXALT HEALTH
40 BED REHAB HOSPITAL - PANAMA CITY BEACH
2851 HWY 77
PANAMA CITY, FLORIDA 32405

PROJECT: H002125

Δ	DATE	DESCRIPTION

KEY PLAN:

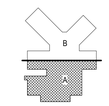

NOT FOR CONSTRUCTION

ORIG SUBMISSION: 02/13/26
CURRENT:

SHEET TITLE AND NUMBER:

P2.02a

SANITARY - ROOF PLAN - AREA A

THE LINE SHOWN ABOVE IS EXACTLY ONE HOUR AT 30 SCALE

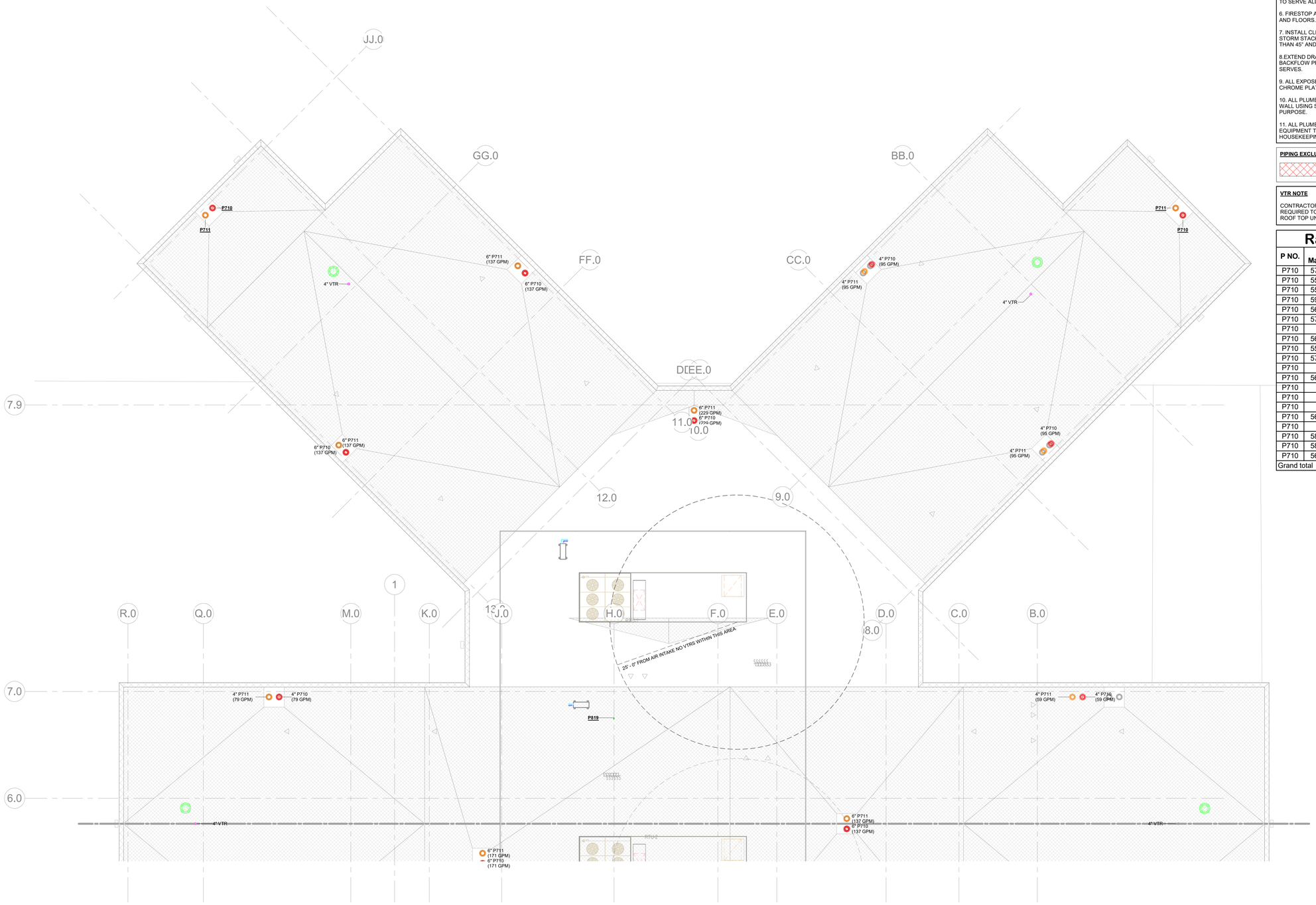

1 P2.02b SANITARY - ROOF PLAN - AREA B
1/8" = 1'-0"

TRUE NORTH PROJECT NORTH

GENERAL NEW CONSTRUCTION NOTES

1. CONTRACTOR SHALL PAY ALL FEES AND CHARGES REQUIRED TO ACHIEVE THE INSTALLATION.

2. CONTRACTOR SHALL LOCATE NEW EQUIPMENT AND ROUTE NEW PIPING TO AVOID CONFLICTS AND INTERFERENCES WITH FIELD CONDITIONS. FINAL COORDINATION WITH OTHER TRADES IS THE RESPONSIBILITY OF THE CONTRACTOR.

3. DRAWINGS ARE DIAGRAMMATIC AND INDICATE GENERAL ARRANGEMENT OF SYSTEMS. DRAWINGS SHALL NOT BE SCALED.

4.COORDINATE WITH GENERAL CONTRACTOR THE PATCHING OF FLOORS TO ACCOMMODATE NEW PIPING.

5. PROVIDE TRAP PRIMER CONNECTION AND TRAP PRIMER TO SERVE ALL FLOOR DRAINS.

6. FIRESTOP ALL PENETRATIONS THROUGH RATED WALL AND FLOORS.

7. INSTALL CLEANOUTS AT BASE OF ALL SANITARY AND STORM STACKS, AT ALL CHANGE IN DIRECTIONS GREATER THAN 45° AND IN STRAIGHT RUNS AT LEAST EVERY 50 FT.

8.EXTEND DRAIN PIPING FROM REDUCED PRESSURE BACKFLOW PREVENTER TO FLOOR DRAIN THE RPBP SERVES.

9. ALL EXPOSED WATER PIPING IN FINISHED SPACES TO BE CHROME PLATED.

10. ALL PLUMBING FIXTURES TO BE SEALED AT FLOOR OR WALL USING SANITARY SEALANT APPROVED FOR THE PURPOSE.

11. ALL PLUMBING, MEDICAL GAS AND FIRE PROTECTION EQUIPMENT TO BE INSTALLED ON 6" CONCRETE HOUSEKEEPING PAD.

PIPING EXCLUSION ZONE LEGEND

NO PIPING OR EQUIPMENT NOT SERVING AREA ALLOWED ABOVE THIS AREA.

VTR NOTE

CONTRACTOR SHALL OFFSET ALL VENTS THRU ROOF AS REQUIRED TO MAINTAIN 25'-0" MIN. SEPARATION FROM ROOF TOP UNIT FRESH AIR INTAKE.

Rainwater Drain

P NO.	Mark	Outlet Size	Flow	Size Check
P710	571	6	229.19 GPM	Correct
P710	557	6	204.89 GPM	Correct
P710	555	6	203.94 GPM	Correct
P710	590	6	185.45 GPM	Correct
P710	565	6	170.87 GPM	Correct
P710	578	6	137.25 GPM	Correct
P710		6	137.25 GPM	Correct
P710	567	6	136.67 GPM	Correct
P710	559	6	118.17 GPM	Correct
P710	573	4	94.5 GPM	Correct
P710		4	94.5 GPM	Correct
P710	563	4	78.75 GPM	Correct
P710		4	78.75 GPM	Correct
P710		4	78.75 GPM	Correct
P710		4	78.75 GPM	Correct
P710	569	4	58.5 GPM	Correct
P710		4	58.5 GPM	Correct
P710	584	4	56.84 GPM	Correct
P710	582	4	28.31 GPM	Correct
P710	561	4	21.11 GPM	Correct
Grand total			2250.9 GPM	

ENVIRONMENTS FOR HEALTH ARCHITECTURE
e4h
888.781.8441 817.229.1917 801 Cherry St. Ste. 500, Fort Worth, TX 76102 e4harchitecture.com

© 2025 E4H - Environments For Health, LLC

exalt health

RYAN

ICT
I.C. Thomasson Associates, Inc.
A Salas O'Brien Company
2950 Kraft Drive
Nashville, TN 37204
PHONE 615-346-3400
https://www.ictthomasson.com/
ICT Project No. 2545-02546

FIRM CERTIFICATE OF AUTHORIZATION: CA-1276

ELECTRICAL ENGINEER
FLORIDA REGISTRATION:
JOSHUA R. CARTWRIGHT, P.E. #71893

MECHANICAL ENGINEER
FLORIDA REGISTRATION:
ZACHARY N. McCOY, P.E. #93060

EXALT HEALTH
40 BED REHAB HOSPITAL - PANAMA CITY BEACH
2851 HWY 77
PANAMA CITY, FLORIDA 32405

PROJECT: H002125

Δ	DATE	DESCRIPTION

KEY PLAN:

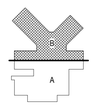

NOT FOR CONSTRUCTION

ORIG SUBMISSION: 02/13/26
CURRENT:

SHEET TITLE AND NUMBER:

P2.02b

SANITARY - ROOF PLAN - AREA B

THE LINE SHOWN ABOVE IS EXACTLY ONE HORIZONTAL INCH ON ORIGINAL ARCHITECT'S DRAWINGS

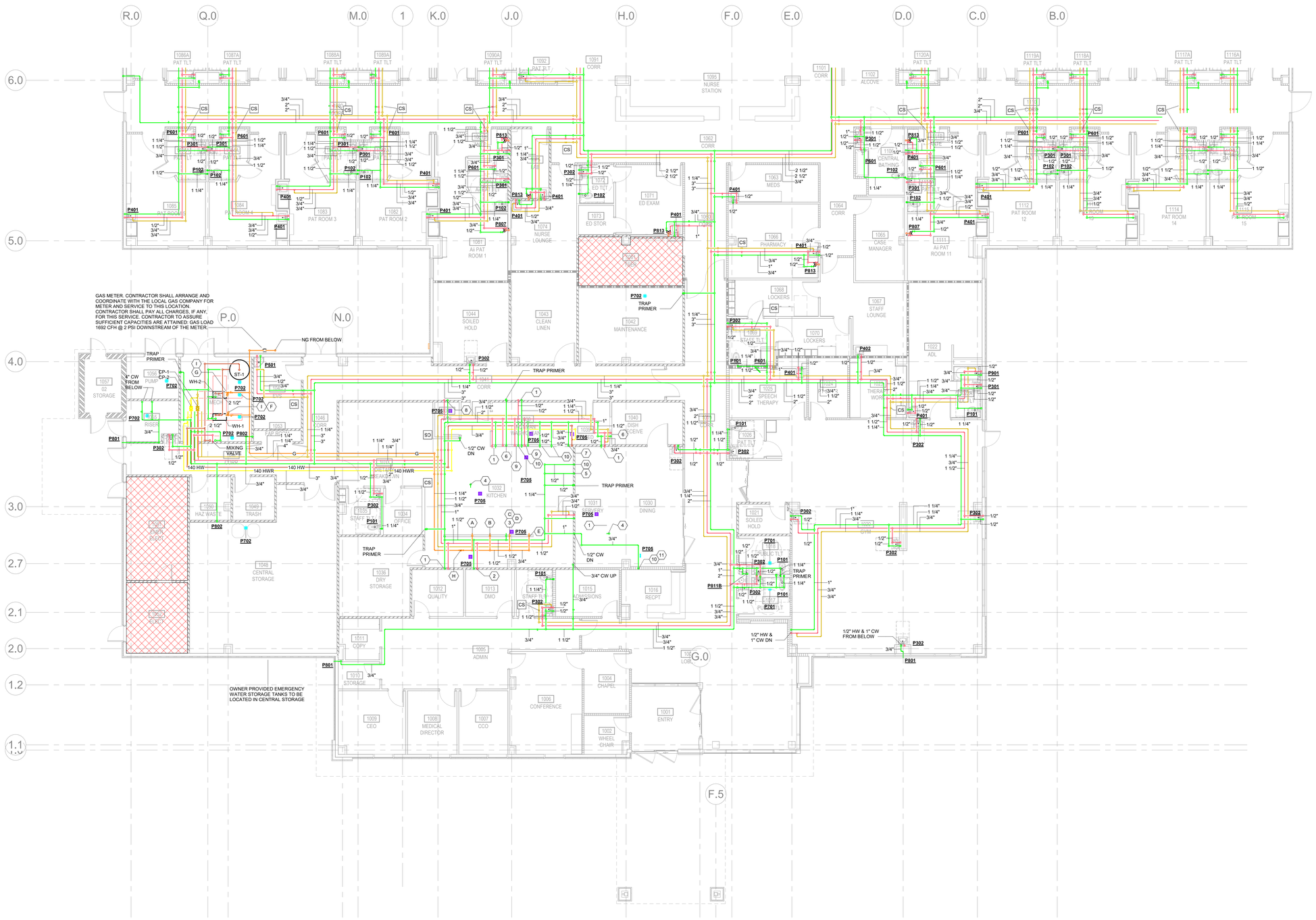

1 P3.01a PLUMBING - LEVEL 1 - AREA A
1/8" = 1'-0"

TRUE NORTH
PROJECT NORTH

GENERAL NEW CONSTRUCTION NOTES

1. CONTRACTOR SHALL PAY ALL FEES AND CHARGES REQUIRED TO ACHIEVE THE INSTALLATION.

2. CONTRACTOR SHALL LOCATE NEW EQUIPMENT AND ROUTE NEW PIPING TO AVOID CONFLICTS AND INTERFERENCES WITH FIELD CONDITIONS. FINAL COORDINATION WITH OTHER TRADES IS THE RESPONSIBILITY OF THE CONTRACTOR.

3. DRAWINGS ARE DIAGRAMMATIC AND INDICATE GENERAL ARRANGEMENT OF SYSTEMS. DRAWINGS SHALL NOT BE SCALED.

4.COORDINATE WITH GENERAL CONTRACTOR THE PATCHING OF FLOORS TO ACCOMMODATE NEW PIPING.

5. PROVIDE TRAP PRIMER CONNECTION AND TRAP PRIMER TO SERVE ALL FLOOR DRAINS.

6. FIRESTOP ALL PENETRATIONS THROUGH RATED WALL AND FLOORS.

7. INSTALL CLEANOUTS AT BASE OF ALL SANITARY AND STORM STACKS, AT ALL CHANGE IN DIRECTIONS GREATER THAN 45° AND IN STRAIGHT RUNS AT LEAST EVERY 50 FT.

8.EXTEND DRAIN PIPING FROM REDUCED PRESSURE BACKFLOW PREVENTER TO FLOOR DRAIN THE RPBP SERVES.

9. ALL EXPOSED WATER PIPING IN FINISHED SPACES TO BE CHROME PLATED.

10. ALL PLUMBING FIXTURES TO BE SEALED AT FLOOR OR WALL USING SANITARY SEALANT APPROVED FOR THE PURPOSE.

11. ALL PLUMBING, MEDICAL GAS AND FIRE PROTECTION EQUIPMENT TO BE INSTALLED ON 6" CONCRETE HOUSEKEEPING PAD.

PIPING EXCLUSION ZONE LEGEND

NO PIPING OR EQUIPMENT NOT SERVING AREA ALLOWED ABOVE THIS AREA.

SHUTOFF VALVE NOTE

PROVIDE SHUT-OFF VALVES AT ALL BRANCH LINES NEAR MAIN LINE CONNECTION.

THERMOSTATIC BALANCING VALVE LEGEND CS

THERMOSTATIC BALANCING VALVE TO BE THERMOMEGATECH CIRCUITSOLVER OR APPROVED EQUAL. CONTRACTOR TO INSTALL PER MANUFACTURER'S INSTRUCTIONS. CONTRACTOR TO ENSURE BALANCING VALVE IS INSTALLED IN THE DIRECTION OF FLOW.

WATER HAMMER ARRESTOR NOTE

PROVIDE WATER HAMMER ARRESTORS AT ALL QUICK CLOSING VALVES. WATER HAMMER ARRESTOR TO BE ZURN SERIES Z-1700 OR EQUAL. PROVIDE ACCESS TO ALL WATER HAMMER ARRESTORS THRU ACCESS PANELS, LAY IN CEILINGS, WALL IN CHASE.

KITCHEN PLUMBING KEYNOTES

1. 1/2" C&HW TO SERVE HAND SINK
2. 1/2" HW & 3/4" CW TO SERVE SINK & DISPOSER
3. (2) 3/4" C&FW TO SERVE COMBI OVEN
4. 1/4" CW TO SERVE FOOD UNIT
5. 1/2" CW TO SERVE ICE MAKER
6. 1/2" HW & 3/4" CW TO SERVE PRE-RINSE UNIT & DISPOSER
7. 1/2" CW & 140 HW TO SERVE DISH MACHINE
8. 1/2" C&HW TO SERVE MOP SINK
9. 3/4" C&HW TO SERVE 3 COMP SINK
10. 1/2" CW TO SERVE WATER FILTRATION SYSTEM.
11. 1/2" CW TO SERVE CARBONATOR

KITCHEN NATURAL GAS KEYNOTES

A. 3/4" NG TO SERVE GRIDDLE (84.0 CFH)
B. 3/4" NG TO SERVE BURNER (236.0 CFH)
C. 3/4" NG TO SERVE COMBI OVEN (128.0 CFH)
D. 3/4" NG TO SERVE COMBI OVEN (128.0 CFH)
E. 3/4" NG TO SERVE CONVECTION OVEN (120.0 CFH)
F. 1 1/4" NG TO WH-1 (500.0 CFH)
G. 1 1/4" NG TO WH-1 (500.0 CFH)
H. PRESURE REGULATOR 2PSI TO 10" WC. (692 CFH)
I. PRESURE REGULATOR 2PSI TO 10" WC. (500 CFH)

ENVIRONMENTS FOR HEALTH ARCHITECTURE
e4h
817.226.1917 801 Cherry St. Ste. 500, Fort Worth, TX 76102
888.781.8441 e4harchitecture.com

© 2025 E4H - Environments For Health, LLC

exalt health

RYAN

ICT
I.C. Thomasson Associates, Inc.
A Salas O'Brien Company
2950 Kraft Drive
Nashville, TN 37204
PHONE 615-346-3400
https://www.ictthomasson.com/
ICT Project No. 2545-02546

FIRM CERTIFICATE OF AUTHORIZATION: CA-1276

ELECTRICAL ENGINEER
FLORIDA REGISTRATION:
JOSHUA R. CARTWRIGHT, P.E. #71893

MECHANICAL ENGINEER
FLORIDA REGISTRATION:
ZACHARY N. McCOY, P.E. #93060

EXALT HEALTH 40 BED REHAB HOSPITAL - PANAMA CITY BEACH

2851 HWY 77
PANAMA CITY, FLORIDA 32405

PROJECT: H002125

Δ	DATE	DESCRIPTION

KEY PLAN:

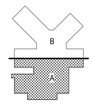

NOT FOR CONSTRUCTION

ORIG SUBMISSION: 02/13/26
CURRENT:

SHEET TITLE AND NUMBER:

P3.01a

PLUMBING - FLOOR PLAN - LEVEL 1 - AREA A

THE LINE SHOWN ABOVE IS EXACTLY ONE HORIZONTAL INCH ON ORIGINAL ARCHITECTURAL DRAWINGS

1 P3.01b PLUMBING - LEVEL 1 - AREA B
1/8" = 1'-0"

TRUE NORTH

PROJECT NORTH

GENERAL NEW CONSTRUCTION NOTES

1. CONTRACTOR SHALL PAY ALL FEES AND CHARGES REQUIRED TO ACHIEVE THE INSTALLATION.

2. CONTRACTOR SHALL LOCATE NEW EQUIPMENT AND ROUTE NEW PIPING TO AVOID CONFLICTS AND INTERFERENCES WITH FIELD CONDITIONS. FINAL COORDINATION WITH OTHER TRADES IS THE RESPONSIBILITY OF THE CONTRACTOR.

3. DRAWINGS ARE DIAGRAMMATIC AND INDICATE GENERAL ARRANGEMENT OF SYSTEMS. DRAWINGS SHALL NOT BE SCALED.

4.COORDINATE WITH GENERAL CONTRACTOR THE PATCHING OF FLOORS TO ACCOMMODATE NEW PIPING.

5. PROVIDE TRAP PRIMER CONNECTION AND TRAP PRIMER TO SERVE ALL FLOOR DRAINS.

6. FIRESTOP ALL PENETRATIONS THROUGH RATED WALL AND FLOORS.

7. INSTALL CLEANOUTS AT BASE OF ALL SANITARY AND STORM STACKS. AT ALL CHANGE IN DIRECTIONS GREATER THAN 45° AND IN STRAIGHT RUNS AT LEAST EVERY 50 FT.

8.EXTEND DRAIN PIPING FROM REDUCED PRESSURE BACKFLOW PREVENTER TO FLOOR DRAIN THE RPBP SERVES.

9. ALL EXPOSED WATER PIPING IN FINISHED SPACES TO BE CHROME PLATED.

10. ALL PLUMBING FIXTURES TO BE SEALED AT FLOOR OR WALL USING SANITARY SEALANT APPROVED FOR THE PURPOSE.

11. ALL PLUMBING, MEDICAL GAS AND FIRE PROTECTION EQUIPMENT TO BE INSTALLED ON 6" CONCRETE HOUSEKEEPING PAD.

PIPING EXCLUSION ZONE LEGEND

NO PIPING OR EQUIPMENT NOT SERVING AREA ALLOWED ABOVE THIS AREA.

SHUTOFF VALVE NOTE

PROVIDE SHUT-OFF VALVES AT ALL BRANCH LINES NEAR MAIN LINE CONNECTION.

THERMOSTATIC BALANCING VALVE LEGEND CS

THERMOSTATIC BALANCING VALVE TO BE THERMOMEGATECH CIRCUITSOLVER OR APPROVED EQUAL. CONTRACTOR TO INSTALL PER MANUFACTURER'S INSTRUCTIONS. CONTRACTOR TO ENSURE BALANCING VALVE IS INSTALLED IN THE DIRECTION OF FLOW.

WATER HAMMER ARRESTOR NOTE

PROVIDE WATER HAMMER ARRESTORS AT ALL QUICK CLOSING VALVES. WATER HAMMER ARRESTOR TO BE ZURN SERIES Z-1700 OR EQUAL. PROVIDE ACCESS TO ALL WATER HAMMER ARRESTORS THRU ACCESS PANELS, LAY IN CEILINGS, WALL IN CHASE.

ENVIRONMENTS FOR HEALTH ARCHITECTURE
e4h
817.226.1917 801 Cherry St. Ste. 500, Fort Worth, TX 76102
888.781.8441 e4harchitecture.com

© 2025 E4H - Environments For Health, LLC

exalt health

RYAN

ICT
I.C. Thomasson Associates, Inc.
A Salas O'Brien Company
2950 Kraft Drive
Nashville, TN 37204
PHONE 615-346-3400
https://www.ictthomasson.com/
ICT Project No. 2545-02546

FIRM CERTIFICATE OF AUTHORIZATION: CA-1276

ELECTRICAL ENGINEER
FLORIDA REGISTRATION:
JOSHUA R. CARTWRIGHT, P.E. #71893

MECHANICAL ENGINEER
FLORIDA REGISTRATION:
ZACHARY N. McCOY, P.E. #93060

EXALT HEALTH
40 BED REHAB HOSPITAL - PANAMA CITY BEACH

2851 HWY 77
PANAMA CITY, FLORIDA 32405

PROJECT: H002125

Δ	DATE	DESCRIPTION

KEY PLAN:

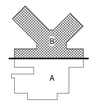

NOT FOR CONSTRUCTION

ORIG SUBMISSION: 02/13/26

CURRENT:

SHEET TITLE AND NUMBER:

P3.01b

PLUMBING - FLOOR PLAN - LEVEL 1 - AREA B

THE LINE SHOWN ABOVE IS EXACTLY ONE HORIZONTAL INCH ON ORIGINAL ARCHITECT'S DRAWINGS

R.0
Q.0
M.0
1
K.0
J.0
H.0
F.0
E.0
D.0
C.0
B.0
P.0
N.0
G.0
F.5
6.0
5.0
4.0
3.0
2.7
2.1
2.0
1.2
1.1
1086A PAT TLT
1087A PAT TLT
1088A PAT TLT
1089A PAT TLT
1090A PAT TLT
1092 PAT TLT
1091 CORR
1095 NURSE STATION
1101 CORR
1102 ALCOVE
1120A PAT TLT
1119A PAT TLT
1118A PAT TLT
1117A PAT TLT
1116A PAT TLT
1085A PAT TLT
1084A PAT TLT
1083A PAT TLT
1082A PAT TLT
1081B ANTE
1075 LAB
1072 ED TLT
1073 ED STOR
1074 NURSE LOUNGE
1081A Ai PAT
1081 Ai PAT ROOM 1
1080 CORR
1085 PAT ROOM 5
1084 PAT ROOM 4
1083 PAT ROOM 3
1082 PAT ROOM 2
ED EXAM
ZVB
1063 MEDS
1064 CORR
1066 PHARMACY
1065 CASE MANAGER
1106 CENTRAL BATHING
1111B ANTE
1111A PAT TLT
1111 Ai PAT ROOM 11
1110 CORR
1112A PAT TLT
1113A PAT TLT
1114A PAT TLT
1115A PAT TLT
1112 PAT ROOM 12
1113 PAT ROOM 13
1114 PAT ROOM 14
1115 PAT ROOM 15
1044 SOILED HOLD
1043 CLEAN LINEN
1042 MAINTENANCE
1068 LOCKERS
1067 STAFF LOUNGE
1069 STAFF TLT
1070 LOCKERS
1022 ADL
1022A ADL TLT
1025 SPEECH THERAPY
1024 PT STOR
1023 THERAPY WORK
1026 PAT TLT
1041 CORR
1037 JAN
1038 POT/PAN WASH/CLEAN
1039 SOILED
1040 DISH RECEIVE
1019 CORR
1032 KITCHEN
1031 SERVERY
1030 DINING
1021 SOILED HOLD
1018 PUBLIC TLT
1017 PUBLIC TLT
1020 GYM
1033 DIETARY BREAKDOWN
1035 STAFF TLT
1034 OFFICE
1036 DRY STORAGE
1012 QUALITY
1013 DMO
1014 STAFF TLT
1015 ADMISSIONS
1016 RECPT
1011 COPY
1005 ADMIN
1010 STORAGE
1004 CHAPEL
1006 CONFERENCE
1009 CEO
1008 MEDICAL DIRECTOR
1007 COO
1002 WHEEL CHAIR
1001 ENTRY
1048 CENTRAL STORAGE
1050 HAZ WASTE
1049 TRASH
1053 EAP ROOM
1045 EVS
1054 MECH
1055 RISER
1052 CORR
1047 CORR
1046 CORR
1003 STORAGE
VP-1
12 x 12 O2 MANIFOLD
VACUUM EXAUST
EMERGENCY O2 CONNECTION
VACUUM EXAUST TO ROOF
MAP
O2
V
3/4" 1/2"
1" 3/4"
1 1/4" 3/4"
1" 3/4"
1" 2"
2" 1"
3/4" 1/2"
3/4" 1/2"
3/4" 1/2"
3/4" 1/2"
3/4" 1/2"
3/4" 1/2"
3/4" 1/2"
3/4" 1/2"
1" 2"
2" 1"
1" 2"
1" 2"
1" 2

THE LINE SHOWN ABOVE IS EXACTLY ONE HOUR AT 30 SHEETS

1 P4.01b MEDICAL GAS - LEVEL 1 - AREA B
1/8" = 1'-0"

TRUE NORTH PROJECT NORTH

GENERAL NEW CONSTRUCTION NOTES

1. CONTRACTOR SHALL PAY ALL FEES AND CHARGES REQUIRED TO ACHIEVE THE INSTALLATION.

2. CONTRACTOR SHALL LOCATE NEW EQUIPMENT AND ROUTE NEW PIPING TO AVOID CONFLICTS AND INTERFERENCES WITH FIELD CONDITIONS. FINAL COORDINATION WITH OTHER TRADES IS THE RESPONSIBILITY OF THE CONTRACTOR.

3. DRAWINGS ARE DIAGRAMMATIC AND INDICATE GENERAL ARRANGEMENT OF SYSTEMS. DRAWINGS SHALL NOT BE SCALED.

4.COORDINATE WITH GENERAL CONTRACTOR THE PATCHING OF FLOORS TO ACCOMMODATE NEW PIPING.

5. PROVIDE TRAP PRIMER CONNECTION AND TRAP PRIMER TO SERVE ALL FLOOR DRAINS.

6. FIRESTOP ALL PENETRATIONS THROUGH RATED WALL AND FLOORS.

7. INSTALL CLEANOUTS AT BASE OF ALL SANITARY AND STORM STACKS, AT ALL CHANGE IN DIRECTIONS GREATER THAN 45° AND IN STRAIGHT RUNS AT LEAST EVERY 50 FT.

8.EXTEND DRAIN PIPING FROM REDUCED PRESSURE BACKFLOW PREVENTER TO FLOOR DRAIN THE RPBP SERVES.

9. ALL EXPOSED WATER PIPING IN FINISHED SPACES TO BE CHROME PLATED.

10. ALL PLUMBING FIXTURES TO BE SEALED AT FLOOR OR WALL USING SANITARY SEALANT APPROVED FOR THE PURPOSE.

11. ALL PLUMBING, MEDICAL GAS AND FIRE PROTECTION EQUIPMENT TO BE INSTALLED ON 6" CONCRETE HOUSEKEEPING PAD.

PIPING EXCLUSION ZONE LEGEND

NO PIPING OR EQUIPMENT NOT SERVING AREA ALLOWED ABOVE THIS AREA.

SHUTOFF VALVE NOTE

PROVIDE SHUT-OFF VALVES AT ALL BRANCH LINES NEAR MAIN LINE CONNECTION.

MEDICAL GAS CERTIFICATION NOTE

SYSTEM SHALL BE CERTIFIED BY AN INDEPENDENT THIRD-PARTY MEDICAL GAS TESTING AGENCY PRIOR TO USE OF THE SYSTEM. CERTIFIER MUST HAVE NITC CERTIFICATE AND STATE CERTIFICATION AS A MEDICAL GAS INSPECTOR. THE FIRE CODE OFFICIAL MUST BE PRESENT TO WITNESS ALL TESTING. COPIES OF CERTIFICATION TO BE PROVIDED TO THE FIRE CODE OFFICIAL.

ENVIRONMENTS FOR HEALTH ARCHITECTURE
e4h
888.781.8441 817.228.1917 801 Cherry St. Ste. 500, Fort Worth, TX 76102 e4harchitecture.com

© 2025 E4H - Environments For Health, LLC

exalt health

RYAN

ICT
I.C. Thomasson Associates, Inc.
A Salas O'Brien Company
2950 Kraft Drive
Nashville, TN 37204
PHONE 615-346-3400
https://www.ictthomasson.com/
ICT Project No. 2545-02546

FIRM CERTIFICATE OF AUTHORIZATION: CA-1276

ELECTRICAL ENGINEER
FLORIDA REGISTRATION:
JOSHUA R. CARTWRIGHT, P.E. #71893

MECHANICAL ENGINEER
FLORIDA REGISTRATION:
ZACHARY N. McCOY, P.E. #93060

EXALT HEALTH
40 BED REHAB HOSPITAL - PANAMA CITY BEACH
2851 HWY 77
PANAMA CITY, FLORIDA 32405

PROJECT: H002125

Δ	DATE	DESCRIPTION

KEY PLAN:

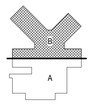

NOT FOR CONSTRUCTION

ORIG SUBMISSION: 02/13/26
CURRENT:

SHEET TITLE AND NUMBER:

P4.01b

MEDICAL GAS - FLOOR PLAN - LEVEL 1 - AREA B