MECHANICAL SYMBOLS LEGEND

GENERAL

SYMBOL	DESCRIPTION
	ACCESS PANEL
	CONNECT TO EXISTING
	REMOVE TO EXISTING
L	DOOR LOUVER
UC	DOOR UNDERCUT
	EXHAUST FAN
#	KEYNOTE
#	REVISION

AIR DEVICE

SYMBOL	DESCRIPTION
NOTE TAG CFM	AIR DEVICE TAG
	SUPPLY SQUARE AIR DIFFUSER
	RETURN (SLASH MAY BE FLIPPED)
	EXHAUST (SLASH MAY BE FLIPPED)
	LINEAR SLOT DIFFUSER (ALL SYSTEMS)

DUCTWORK

SYMBOL	DESCRIPTION
AFS	AIRFLOW MEASUREMENT STATION
BDD	BACKDRAFT DAMPER
	DIRECTION OF AIRFLOW - RETURN
	DIRECTION OF AIRFLOW - SUPPLY
AxB	DUCTWORK - DIMENSIONS (SIDE SHOWN x SIDE NOT SHOWN)
A/B	DUCTWORK - DIMENSIONS - FLAT OVAL (SIDE SHOWN x SIDE NOT SHOWN)
AØ	DUCTWORK - DIMENSIONS - ROUND
DN	DUCT ELEVATION DROP
UP	DUCT ELEVATION RISE
DN	DUCT ELEVATION DROP (ROUND OR FLAT OVAL)
UP	DUCT ELEVATION RISE (ROUND OR FLAT OVAL)
	MANUAL VOLUME DAMPER
	MOTOR OPERATED DAMPER
	FLEXIBLE DUCT

DUCTWORK - CONT

SYMBOL	DESCRIPTION
	FLEXIBLE CONNECTION
	SUPPLY DUCT DOWN
	SUPPLY DUCT UP
	RETURN DUCT DOWN (SLASH MAY BE FLIPPED)
	RETURN DUCT UP (SLASH MAY BE FLIPPED)
	EXHAUST DUCT DOWN (SLASH MAY BE FLIPPED)
	EXHAUST DUCT UP (SLASH MAY BE FLIPPED)
	ELBOW 90° DOWN
	ELBOW 90° UP
FD	FIRE DAMPER
SD DSD	SMOKE DAMPER
FS DSD	COMBINATION FIRE / SMOKE DAMPER
AxB AxB	DUCTWORK - TRANSITION - RECTANGULAR
AxB (AØ) (AxBFO)	DUCTWORK - TRANSITION - RECTANGULAR TO ROUND / FLAT OVAL

PIPING

SYMBOL	DESCRIPTION
AV	AIR VENT (AUTOMATIC)
MV	AIR VENT (MANUAL)
	CAP
	DIRECTION OF WATER FLOW
	ELBOW 90°
	ELBOW 45°
	ELBOW 90° DOWN
	ELBOW 90° UP
	EXPANSION JOINT
	UNION
	FLEXIBLE CONNECTION
	FLOWMETER - ORIFICE
	FLOWMETER - VENTURI
FS	FLOW SWITCH

PIPING - CONT

SYMBOL	DESCRIPTION
	PIPE ANCHOR
	PIPE GUIDE
	STRAINER WITH VALVED AND CAPPED BLOW DOWN
	TEE DOWN
	TEE UP
T	TEMPERATURE SENSOR
	THERMOMETER
	PRESSURE GAUGE WITH GAUGE COCK
	PT (PRESSURE & TEMPERATURE) TEST PORT
P-#	PUMP (ARROW IS DIRECTION OF FLOW)
	REDUCER
	VALVE, ANGLE GLOBE
	VALVE, BALL
	VALVE, BUTTERFLY

PIPING - CONT

SYMBOL	DESCRIPTION
	VALVE, CALIBRATED BALANCE
	VALVE, CHECK (SPRING)
	VALVE, CHECK (SWING GATE)
	VALVE, CONTROL (2-WAY)
	VALVE, CONTROL (3-WAY)
	VALVE, GATE
	VALVE, GLOBE
	VALVE, PLUG
	VALVE, PRESSURE REDUCING
	VALVE, PRESSURE RELIEF
S	VALVE, SOLENOID

CONTROL / SENSORS

SYMBOL	DESCRIPTION
ATFP -OR- ATFP	ATFP SHUTDOWN SWITCH
CO_2	CARBON DIOXIDE SENSOR
CO	CARBON MONOXIDE SENSOR
DDCP	DIRECT DIGITAL CONTROL PANEL
DP	DUCTWORK - DIFFERENTIAL PRESSURE
DSD	DUCTWORK - DUCT SMOKE DETECTOR
H	HUMIDISTAT SENSOR
H_2	HYDROGEN SENSOR
NO_x	NITROGEN OXIDE SENSOR
S	STARTER (EQUIPMENT SERVED)
$	SWITCH
T	THERMOSTAT (DASHED LINE RUNS TO CONTROLLED DEVICE)

HVAC PIPE LEGEND

SYMBOL	DESCRIPTION
	CONDENSATE DRAIN
	DOMESTIC COLD WATER
	DOMESTIC HOT WATER
	CHILLED WATER RETURN
	CHILLED WATER SUPPLY
	CONDENSER WATER RETURN
	CONDENSER WATER SUPPLY
	HEATING WATER RETURN
	HEATING WATER SUPPLY
	REFRIGERANT SUCTION / REFRIGERANT LIQUID *

* RS/RL LINES MUST BE SIZED PER EQUIPMENT MANUFACTURER'S REQUIREMENTS AND RECOMMENDATIONS.

NOTE: LEGEND AND ABBREVIATIONS ARE ALL INCLUSIVE, SOME SYMBOLS OR ABBREVIATIONS SHOWN MAY NOT BE USED IN THIS PROJECT

MECHANICAL ABBREVIATIONS

ABBREV	DESCRIPTION
AC	AIR CONDITIONER, AIR CURTAIN
ACCU	AIR COOLED CONDENSING UNIT
ACU	AIR CONDITIONING UNIT
AD	ACCESS DOOR
AFF	ABOVE FINISHED FLOOR
AHU	AIR HANDLING UNIT
APD	AIR PRESSURE DROP
APPROX	APPROXIMATE(LY)
ARCH	ARCHITECT(URAL)
AS	AIR SEPARATOR
B	BOILER
BAS	BUILDING AUTOMATION SYSTEM
BCU	BLOWER COIL UNIT
BHP	BREAK HORSEPOWER
BLDG	BUILDING
BOT	BOTTOM
BTU	BRITISH THERMAL UNIT
BTUH	BRITISH THERMAL UNIT(S) PER HOUR
CAP	CAPACITY
CCFC	CLOSED CIRCUIT FLUID COOLER
CD	CONDENSATE DRAIN
CFM	CUBIC FEET PER MINUTE
CH	CHILLER
CLG	CEILING, COOLING
CON	CONNECTION
CONC	CONCRETE
CONT	CONTINUOUS, CONTINUATION, CONSTANT
CONTR	CONTRACTOR
CONV	CONVECTOR
CTL	CONTROL
CU FT	CUBIC FEET

ABBREV	DESCRIPTION
CUH	CABINET UNIT HEATER
CW	DOMESTIC COLD WATER
CWBT	CHILLED WATER BUFFER TANK
CWP	CONDENSER WATER PUMP
CWPP	CONDENSER WATER PRIMARY PUMP
CWPR	CONDENSER WATER RETURN (PRIMARY LOOP)
CWPS	CONDENSER WATER SUPPLY (PRIMARY LOOP)
CWR	CONDENSER WATER RETURN
CWS	CONDENSER WATER SUPPLY
DB	DRY BULB
DDC	DIRECT DIGITAL CONTROL
DEG	DEGREE(S)
DIA	DIAMETER
DIFF	DIFFUSER
DISC	DISCONNECT
DOAS	DEDICATED OUTDOOR AIR SYSTEM
DWG	DRAWING
DWH	DOMESTIC WATER HEATER
DX	DIRECT EXPANSION
EA	EXHAUST AIR
EAG	EXHAUST AIR GRILLE
EAR	EXHAUST AIR REGISTER
EAT	ENTERING AIR TEMPERATURE
EC	ELECTRICAL CONTRACTOR
EF	EXHAUST FAN
ELEC	ELECTRIC(AL)
ERU	ENERGY RECOVERY UNIT
ERV	ENERGY RECOVERY VENTILATOR
ERW	ENERGY RECOVERY WHEEL
ESP	EXTERNAL STATIC PRESSURE

ABBREV	DESCRIPTION
ET	EXPANSION TANK
ETR	EXISTING TO REMAIN
EWT	ENTERING WATER TEMPERATURE
EXH	EXHAUST
EXIST, EX	EXISTING
(F)	FUTURE
F	FAHRENHEIT
FAI	FRESH AIR INTAKE
FCU	FAN COIL UNIT
FDB	DEGREE(S) FAHRENHEIT DRY BULB
FIN FLR	FINISHED FLOOR
FLEX	FLEXIBLE
FPM	FEET PER MINUTE
FT	FOOT, FEET
FWB	DEGREE(S) FAHRENHEIT WET BULB
GA	GAUGE
GC	GENERAL CONTRACTOR
GMU	GLYCOL MAKEUP UNIT
GPM	GALLON(S) PER MINUTE
GRD	GRILLES, REGISTERS, DIFFUSERS
GV	GRAVITY VENTILATOR
GWR	GLYCOL WATER RETURN
GWS	GLYCOL WATER SUPPLY
DHW	DOMESTIC HOT WATER
HC	HEATING COIL
HOA	HAND-OFF-AUTO(MATIC)
HP	HORSEPOWER
HPU	HEAT PUMP UNIT
HTG	HEATING
HTR	HEATER
HVAC	HEATING VENTILATION / AIR CONDITIONING

ABBREV	DESCRIPTION
HWR	HOT WATER RETURN
HWS	HOT WATER SUPPLY
ID	INSIDE DIAMETER
IN	INCH(ES)
INSUL	INSULATE(D), INSULATION
KEF	KITCHEN EXHAUST FAN
KW	KILOWATT(S)
KWH	KILOWATT HOURS
L	LOUVER
LAT	LEAVING AIR TEMPERATURE
LB, LBS	POUND(S)
LWT	LEAVING WATER TEMPERATURE
MAG	MAGNETIC
MAINT	MAINTENANCE
MAU	MAKE-UP AIR UNIT
MAX	MAXIMUM
MBH	1,000 BTUH
MC	MECHANICAL CONTRACTOR
MECH	MECHANICAL
MFR	MANUFACTURER
MIN	MINIMUM
MISC	MISCELLANEOUS
MUA	MAKE-UP AIR
NC	NORMALLY CLOSED, NOISE CRITERIA
NIC	NOT IN CONTRACT
NO	NORMALLY OPEN
NTS	NOT TO SCALE
OA	OUTSIDE AIR
OD	OUTSIDE DIAMETER
OED	OPEN END(ED) DUCT
P	PUMP
PLBG	PLUMBING

ABBREV	DESCRIPTION
PNL	PANEL
POC	POINT OF CONNECTION
PRESS	PRESSURE
PRV	PRESSURE RELIEVING VALVE
PSI	POUNDS PER SQUARE INCH
PSIG	PSI GAUGE
PTAC	PACKAGED TERMINAL AIR CONDITIONER
QTY	QUANTITY
RA	RETURN AIR
REQ'D	REQUIRED
RF	RETURN FAN
RH	RELATIVE HUMIDITY
RM	ROOM
RPM	REVOLUTIONS PER MINUTE
RS/RL	REFRIGERANT SUCTION / REFRIGERANT LIQUID
RTU	ROOFTOP AIR HANDLING UNIT
RV	RELIEF VENTILATOR
SA	SUPPLY AIR
SAR	SUPPLY AIR REGISTER
SP	STATIC PRESSURE (INCHES WG)
SPECS	SPECIFICATIONS
SQ	SQUARE
STRUC	STRUCTURE, STRUCTURAL
TA	TRANSFER AIR
TEMP	TEMPERATURE
TXV	THERMAL EXPANSION VALVE
TYP	TYPICAL
UH	UNIT HEATER
UNO	UNLESS NOTED OTHERWISE
VAV	VARIABLE AIR VOLUME

ABBREV	DESCRIPTION
VEF	VEHICLE EXHAUST FAN
VEL	VELOCITY
VENT	VENTILATION, VENTILATOR
VER	VEHICLE EXHAUST REEL
VERT	VERTICAL
VFD	VARIABLE FREQUENCY DRIVE
VOL	VOLUME
W/	WITH
W/O	WITHOUT
WB	WET BULB
WG	WATER GAUGE
WSHP	WATER SOURCE HEAT PUMP
WST	WATER STORAGE TANK
WTWHP	WATER TO WATER HEAT PUMP
XFER	TRANSFER

Michael Baker INTERNATIONAL
12740 GRAN BAY PKWY W
SUITE 2110
JACKSONVILLE, FL 32258

Consultant

THE OFFICIAL RECORD OF THIS SHEET IS THE ELECTRONIC FILE DIGITALLY SIGNED AND SEALED UNDER RULE 61G15-23.004, F.A.C.

SEAL

NO.	DATE	DESCRIPTION

REVISIONS

FDOT

FDOT D3 OPERATIONS CENTER
CHIPLEY, FL 32428

MECHANICAL - SYMBOLS AND ABBREVIATIONS

7/7/2026 11:57:46 AM

PHASE IV - FINAL DESIGN SUBMITTAL

Project Number: 4483951-52-01

Date: 07-10-2026

Scale: AS NOTED

Sheet # M-001

© Baker 2018

MECHANICAL GENERAL NOTES

GENERAL:

1. CONTRACT DOCUMENT DRAWINGS FOR MECHANICAL WORK ARE DIAGRAMMATIC AND ARE INTENDED TO CONVEY SCOPE AND GENERAL ARRANGEMENT ONLY, DO NOT SCALE DRAWINGS. CONTRACTOR IS RESPONSIBLE TO FIELD SURVEY AND ACCOMMODATE ACTUAL SITE CONDITIONS AS PART OF SCOPE OF WORK AT NO ADDITIONAL COST TO OWNER.
2. PROVIDE ALL WORK SHOWN OR IMPLIED ON THE DRAWINGS UNLESS SPECIFICALLY NOTED OTHERWISE.
3. PROVIDE ALL MATERIALS, EQUIPMENT AND PERFORM ALL LABOR REQUIRED TO PROVIDE COMPLETE AND OPERABLE MECHANICAL SYSTEMS AS INDICATED ON THE DRAWINGS, AS SPECIFIED, AND AS REQUIRED BY CODE.
4. ALL WORK SHOWN ON THE DRAWINGS IS TO BE PERFORMED BY THE MECHANICAL CONTRACTOR UNLESS SPECIFICALLY NOTED OTHERWISE.
5. EQUIPMENT SUBMITTALS AND SHOP DRAWINGS REQUIRED BY THE SPECIFICATIONS MUST BE REVIEWED IN ACCORDANCE WITH CONTRACT REQUIREMENTS PRIOR TO PURCHASE, FABRICATION, AND INSTALLATION.
6. WHERE TWO OR MORE ITEMS OF THE SAME TYPE OF EQUIPMENT ARE REQUIRED, THE PRODUCTS OF A SINGLE MANUFACTURER MUST BE USED.
7. VERIFY EXISTING CONDITIONS AT THE SITE AND REPORT DISCREPANCIES TO THE OWNER BEFORE PROCEEDING WITH WORK.
8. THE MECHANICAL CONTRACTOR IS RESPONSIBLE FOR DETERMINING QUANTITIES OF MATERIALS REQUIRED TO COMPLETE THE PROJECT.
9. PAINT COLORS AND OTHER FINISHES ARE SUBJECT TO CHANGE WITHOUT NOTICE FROM THOSE LISTED IN THE CONTRACT DOCUMENTS. CONTRACTOR TO SUBMIT SAMPLES OF PROPOSED COLORS AND FINISHES TO OWNER FOR REVIEW AND APPROVAL BEFORE THE INSTALLATION/FINISHING OF SURFACES.
10. IT IS THE RESPONSIBILITY OF THE MECHANICAL CONTRACTOR TO DETERMINE AND TO MAINTAIN THE STRUCTURAL INTEGRITY OF THE BUILDING DURING ALL PHASES OF WORK. PROVIDE REQUIRED SUPPORT, SHORING, PINNING, ETC. TO ASSURE THIS REQUIREMENT.
11. MAINTAIN BUILDING IN WEATHERPROOF AND WATERTIGHT CONDITION THROUGHOUT THE DURATION OF CONSTRUCTION.
12. MAINTAIN A MINIMUM OF 6'-8" CLEARANCE TO THE UNDERSIDE OF PIPES, DUCTS, CONDUITS, SUSPENDED EQUIPMENT, SUPPORTS, ETC., THROUGHOUT ACCESS ROUTES IN MECHANICAL ROOMS.
13. FIRE STOP ALL PENETRATIONS THROUGH CEILINGS, FLOORS, RATED WALLS AND RATED PARTITIONS.
14. COORDINATE FINAL EQUIPMENT CONNECTIONS WITH MANUFACTURERS' CERTIFIED DRAWINGS. COORDINATE AND PROVIDE DUCTWORK AND PIPING TRANSITIONS REQUIRED FOR FINAL EQUIPMENT CONNECTIONS. FIELD VERIFY AND COORDINATE ALL DUCTWORK AND PIPING DIMENSIONS BEFORE FABRICATION.
15. ALL MISCELLANEOUS STEEL REQUIRED FOR PROPER INSTALLATION AND SUPPORT OF MECHANICAL WORK, AS SHOWN IN DETAILS FOR PIPING, DUCTWORK AND EQUIPMENT (UNLESS OTHERWISE NOTED), MUST BE FURNISHED AND INSTALLED BY THE MECHANICAL CONTRACTOR AT NO ADDITIONAL COST TO OWNER.
16. ALL EQUIPMENT, PIPING, DUCTWORK, ETC., MUST BE SUPPORTED AS DETAILED, SPECIFIED, AND AS REQUIRED TO PROVIDE A VIBRATION-FREE INSTALLATION.
17. PROVIDE FLEXIBLE CONNECTIONS IN ALL DUCTWORK SYSTEMS CONNECTED TO FANS AND OTHER EQUIPMENT WHICH REQUIRE VIBRATION ISOLATION. FLEXIBLE CONNECTIONS MUST BE PROVIDED AT THE POINT OF CONNECTION TO THE EQUIPMENT UNLESS OTHERWISE INDICATED.
18. THE CONTRACTOR MUST LEGALLY DISPOSE OF ALL DEMOLISHED MATERIALS OFF-SITE PER REGULATIONS OF AUTHORITIES HAVING JURISDICTION OVER THIS PROJECT.

COORDINATION:

1. SEVERAL PROJECTS MAY OCCUR AT THE SITE SIMULTANEOUSLY WITH THIS PROJECT. COORDINATE ALL WORK REQUIREMENTS UNDER THIS CONTRACT WITH ANY SIMULTANEOUS PROJECTS.
2. THE CONTRACTOR SHALL REVIEW ALL DRAWINGS AND INCORPORATE PHASING REQUIREMENTS IN THE BID.
3. REFER TO AND INCORPORATE THE ARCHITECTURAL, PLUMBING, ELECTRICAL AND FIRE PROTECTION DRAWINGS FOR COORDINATION OF[DEMOLITION AND] NEW WORK.
4. LOCATIONS AND SIZES OF ALL FLOOR, WALL AND ROOF OPENINGS SHALL BE COORDINATED WITH ALL OTHER ASSOCIATE TRADES.
5. COORDINATION WITH THE ELECTRICAL CONTRACTOR:
   - LOCATION AND POWER REQUIREMENTS OF EQUIPMENT, CONTROL PANELS AND DEVICES.
   - MECHANICAL CONTRACTOR MUST FURNISH MOTOR CONTROL DEVICES TO ELECTRICAL CONTRACTOR FOR INSTALLATION. MOTOR CONTROL DEVICES INCLUDE BUT ARE NOT LIMITED TO FUSED DISCONNECTS, DISCONNECTS, MOTOR STARTING SWITCHES, PUSH BUTTON STATIONS, FRACTIONAL HORSEPOWER MANUAL MOTOR STARTERS WITH THERMAL OVERLOADS, 3 PHASE MOTOR CONTACTORS, COMBINATION MOTOR STARTERS, VARIABLE FREQUENCY DRIVES AND SINGLE-PHASE MOTOR SPEED ADJUSTMENT DEVICES.
   - ALL ELECTRICAL REQUIREMENTS AND LOCATIONS OF ALL MECHANICAL EQUIPMENT PRIOR TO ORDERING AND INSTALLATION.
   - PROVIDE CONTROL WIRING FROM REMOTE DISCONNECTS TO VFDs. PROVIDE FAST ACTING AUXILIARY CONTACT IN DISCONNECT COUPLED TO LOGIC/DIGITAL INPUT ON VFD TO TRIGGER FREEWHEEL STOP. POWER & CONTROL WIRING MAY BE RUN IN SAME CONDUIT.

HVAC WORK:

1. THE CONTRACTOR SHALL COORDINATE THE LOCATIONS OF GRILLES, REGISTERS AND DIFFUSER WITH THE CEILING GRID, LIGHTING AND SPRINKLER HEAD LAYOUTS.
2. ALL HEATING DEVICES AND SURFACES WITH ELEVATED TEMPERATURES WHICH CAN BE ACCESSED OR COME IN CONTACT WITH OWNER PERSONNEL SHALL BE PROTECTED, INSULATED, OR CONTROLLED TO REMAIN BELOW 120°F.
3. ALL PIPING AND DUCTWORK MUST CLEAR DOORS, WINDOWS, EQUIPMENT CLEARANCES, MAINTENANCE REQUIREMENTS, CODE SETBACKS, ETC. TO ASSURE PROPER OPERATION, INSPECTION, AND MAINTENANCE.
4. WELDING TO STRUCTURAL MEMBERS IS NOT PERMITTED. ATTACHMENTS MUST BE MADE USING CLAMPS MEETING MSS STANDARDS AS SPECIFIED.
5. MECHANICAL EQUIPMENT, DUCTWORK, AND PIPING MUST NOT BE SUPPORTED FROM ROOF OR DECK ASSEMBLY. SUPPORTS MUST ATTACH TO STRUCTURAL MEMBERS.
6. PROVIDE VIBRATION ISOLATION FOR ALL MECHANICAL EQUIPMENT TO PREVENT VIBRATION TRANSMISSION TO BUILDING STRUCTURE.
7. PROVIDE DUCTWORK OFFSETS AROUND OBSTRUCTIONS AS REQUIRED, COORDINATE WITH CEILING HEIGHTS.
8. PROVIDE CEILING ACCESS DOORS AT EVERY LOCATION THAT A VOLUME DAMPER, FIRE DAMPER, VALVE OR OTHER CONTROL/BALANCING DEVICE WILL BE INSTALLED ABOVE AN INACCESSIBLE CEILING.

EQUIPMENT:

1. INSTALL ALL EQUIPMENT AND APPURTENANCES IN ACCORDANCE WITH MANUFACTURER'S RECOMMENDATIONS, CONTRACT DOCUMENTS, APPLICABLE BUILDING, STATE, AND LOCAL CODES, ENERGY CODES, ASHRAE AND NFPA STANDARDS, AND INSURANCE UNDERWRITER REQUIREMENTS.

DUCTWORK:

1. DUCT DIMENSIONS SHOWN ON PLANS ARE THE INSIDE CLEAR DESIGN DIMENSIONS. FLAT OVAL DIMENSIONS ARE FROM OUTSIDE RADIUS TO OUTSIDE RADIUS OF THE ROUNDED DIMENSION (NOT CENTERLINE TO CENTERLINE). INSTALLATION MUST INCLUDE PROVISIONS FOR DUCT FLANGES, HANGERS, AND INSULATION IN ACCORDANCE WITH SMACNA REQUIREMENTS AS SPECIFIED.
2. PROVIDE ELBOWS WITH A CENTERLINE RADIUS OF 1.5 TIMES THE WIDTH OR DIAMETER OF THE DUCT WHERE SPACE PERMITS. OTHERWISE, ELBOWS HAVING A MINIMUM RADIUS EQUAL TO THE WIDTH OR DIAMETER OF THE DUCT OR SQUARE ELBOWS WITH FACTORY FABRICATED SINGLE WIDTH TURNING VANES ARE ALLOWED WHERE PROPERLY INSTALLED AND SPACED PER SMACNA GUIDELINES. PROVIDE ALL 90 DEGREE SQUARE DUCT ELBOWS WITH TURNING VANES UNLESS OTHERWISE INDICATED OR SPECIFIED. PROVIDE DUCT ACCESS DOORS UPSTREAM OF ALL ELBOWS CONTAINING TURNING VANES.
3. ALL DUCTS MUST BE GROUNDED ACROSS FLEXIBLE CONNECTIONS WITH FLEXIBLE COPPER GROUNDING STRAPS. GROUNDING STRAPS MUST BE BOLTED OR SOLDERED TO BOTH THE EQUIPMENT AND THE DUCT.
4. WHERE DUCT BRANCHES OR TERMINAL DEVICES ARE REMOVED FROM EXISTING DUCTS, THE CONTRACTOR MUST PATCH THE MAIN WITH LIKE THICKNESS SHEET METAL. EXTEND PATCH TO DUCT EDGES. PATCHES MUST BE MADE WITH HEMMED EDGES. DUCT PATCH MUST BE SEALED AIRTIGHT.
5. COORDINATE DUCT ROUTING AND ELEVATION WITH LIGHTING, CEILING GRID, PIPING, CABLE TRAYS, CONDUIT, AND ALL OTHER ITEMS REQUIRED FOR THE COMPLETION OF THIS PROJECT.

HYDRONIC PIPING

1. PROVIDE AN AIR VENT AT THE HIGH POINT OF EACH DROP IN THE HYDRONIC HEATING AND CHILLED WATER PIPING SYSTEMS. ALL PIPING MUST SLOPE TO LOW POINTS. PROVIDE HOSE END DRAIN VALVES AT THE BOTTOM OF ALL RISERS AND LOW POINTS.
2. PROVIDE CHAINWHEEL OPERATORS FOR ALL EXPOSED VALVES MOUNTED GREATER THAN 7'-0" ABOVE FINISHED FLOOR LEVEL. CHAIN MUST EXTEND UNOBSTRUCTED TO 7'-0" ABOVE FLOOR LEVEL.
3. INSTALL PIPING SO THAT ALL VALVES, STRAINERS, UNIONS, TRAPS, FLANGES, AND OTHER APPURTENANCES REQUIRING ACCESS ARE ACCESSIBLE.
4. ALL ISOLATION VALVES MUST BE INSTALLED AT A LOCATION AND ELEVATION WHICH ALLOWS FOR EQUIPMENT AND BRANCH PIPING REMOVAL WHILE MAINTAINING SERVICE UPSTREAM OF THE ISOLATION VALVE.
5. ALL VALVES MUST BE ADJUSTED FOR SMOOTH AND EASY OPERATION.
6. ALL BALANCING VALVES AND ISOLATION VALVES USED TO ADJUST FLOW RATES MUST BE PROVIDED WITH POSITION INDICATORS AND MAXIMUM ADJUSTABLE STOPS (MEMORY STOPS).
7. ALL ISOLATION VALVES (EXCEPT CONTROL VALVES) AND PIPING SPECIALTIES AND STRAINERS ARE TO BE FULL LINE SIZE BEFORE REDUCING SIZE TO MAKE CONNECTIONS TO EQUIPMENT AND CONTROLS.
8. MECHANICAL JOINTS SUCH AS UNIONS, FLANGES, OR THREADED FITTINGS MUST BE INSTALLED AT EACH EQUIPMENT CONNECTION, IN BYPASSES, AT FLOOR PENETRATIONS, AT CONTROL DEVICES, AND IN LONG PIPE RUNS ([100 FEET][30 METERS] OR MORE) TO PERMIT DISASSEMBLY FOR ALTERATION AND REPAIRS.
9. MEASURE, CUT, AND INSTALL PIPE LENGTHS ACCURATELY TO PREVENT MISALIGNMENT. INSTALL ALL PIPING WITHOUT FORCING OR SPRINGING.
10. PROVIDE FLEXIBLE CONNECTIONS IN ALL PIPING SYSTEMS CONNECTED TO PUMPS AND OTHER EQUIPMENT WHICH REQUIRE VIBRATION ISOLATION (EXCEPT WATER COILS). FLEXIBLE CONNECTIONS ARE TO BE PROVIDED AS CLOSE TO THE EQUIPMENT AS POSSIBLE OR AS INDICATED ON THE DRAWINGS.
11. PROVIDE TEMPORARY CAPS ON OPEN-ENDED PIPING TO PREVENT DIRT ENTRAINMENT & FLUID LEAKAGE.

BRACING AND SUPPORT:

1. THE ENTIRE SCOPE OF SUPPORT LOCATIONS, DESIGN, FABRICATION, APPLICATION, AND INSTALLATION OF DUCTS, PIPING, AND EQUIPMENT ARE THE RESPONSIBILITY OF THE MECHANICAL CONTRACTOR. DUCT, PIPE, AND EQUIPMENT SUPPORTS MUST BE IN ACCORDANCE WITH THE LATEST SMACNA "HVAC DUCT CONSTRUCTION STANDARDS", ANSI MSS-SP-58 "PIPE HANGERS AND SUPPORTS - MATERIALS, DESIGN, MANUFACTURE, SELECTION, APPLICATION, AND INSTALLATION", APPLICABLE STANDARDS, FEDERAL CODES, STATE CODES, AND LOCAL CODES. SUBMIT COPIES OF ALL SUPPORT DESIGN ENGINEERING CALCULATIONS AND SHOP DRAWINGS REQUIRED BY THE SPECIFICATIONS FOR APPROVAL PRIOR TO FABRICATION AND INSTALLATION. CALCULATIONS MUST VERIFY THE CAPABILITY OF STRUCTURAL MEMBERS TO WHICH BRACING IS ATTACHED FOR CARRYING THE LOAD FROM THE BRACE.
2. SUPPORTS MUST BE CAPABLE OF RESISTING HORIZONTAL AND VERTICAL LOADS DUE TO WEIGHT OF PIPE, DUCT, FITTINGS, WEIGHT OF FLUID, ACCESSORIES, INSULATION, AND LOADS DUE TO THERMAL EXPANSION OR CONTRACTION.
3. INSTALL SUPPORTS TO AVOID INTERFERENCE AND OBSTRUCTIONS WITH OTHER DISCIPLINES.
4. THE MECHANICAL CONTRACTOR IS RESPONSIBLE FOR ALL SUPPLEMENTARY STEEL REQUIRED FOR SUPPORT INSTALLATION AT NO ADDITIONAL COST.
5. ALL EQUIPMENT, PIPE, AND DUCT SUPPORTS, REGARDLESS OF SIZE AND WHETHER INDICATED ON DRAWINGS OR NOT, MUST MEET SPECIFIED PERFORMANCE REQUIREMENTS. WHERE SUPPORT DETAILS ARE NOT SHOWN ON THE DRAWINGS OR APPROVED DURING PLAN REVIEW, THE FIELD INSTALLATION IS SUBJECT TO THE APPROVAL OF THE ENGINEER OF RECORD AND THE FIELD ENGINEER PRIOR TO INSTALLATION AND INSPECTION BY THE PROJECT INSPECTOR.
6. COMPONENTS OF TWO OR MORE PRE-APPROVED BRACING SYSTEMS ARE NOT TO BE MIXED. ONLY ONE MANUFACTURER'S SUPPORT SYSTEM MAY BE USED FOR A RUN OF PIPE, DUCT, OR EQUIPMENT.
7. WIND SUPPORT REQUIREMENTS: SUPPORTS ON OUTSIDE/EXTERIOR DUCTS, PIPING, AND EQUIPMENT EXPOSED TO WIND MUST BE CAPABLE TO OF WITHSTANDING 150 MPH WIND LOAD.

CONTROLS:

1. COORDINATE AUXILIARY CONTACT AND RELAY REQUIREMENTS WITH SEQUENCES OF OPERATION.
2. COORDINATE MOTOR AND MOTOR CONTROL REQUIREMENTS WITH EQUIPMENT SCHEDULES AND SEQUENCES OF OPERATION.
3. HARDWIRE ALL SAFETIES TO SHUTDOWN HVAC EQUIPMENT.
4. LOCATE ALL TEMPERATURE, PRESSURE AND FLOW MEASURING DEVICES IN ACCESSIBLE LOCATIONS WITH A STRAIGHT SECTION OF PIPE OR DUCT UPSTREAM AND DOWNSTREAM, AS RECOMMENDED BY THE MANUFACTURER FOR ACCURACY.
5. ALL CONTROL WIRE AND CONDUIT MUST COMPLY WITH THE NATIONAL ELECTRIC CODE, DIVISION 26 OF THE SPECIFICATIONS, AND ALL LOCAL CODES.
6. UNLESS OTHERWISE SHOWN, LOCATE ALL ROOM THERMOSTATS WITH CONTROLS BETWEEN 42"-48" (CENTER LINE) ABOVE FINISHED FLOOR IN ACCORDANCE WITH ADA REQUIREMENTS. NOTIFY THE OWNER OF ANY ROOMS WHERE THE LOCATION DESCRIBED ABOVE CANNOT BE MAINTAINED OR WHERE THERE IS A QUESTION ON LOCATION.

TEST AND INSPECTION:

1. THE TESTING ADJUSTING AND BALANCING (TAB) AGENCY SHALL BE A MEMBER OF THE ASSOCIATED AIR BALANCING COUNCIL (AABC), THE NATIONAL ENVIRONMENTAL BALANCING BUREAU (NEBB), OR THE TESTING, ADJUSTING AND BALANCING BUREAU (TABB). TAB FIRM MUST HAVE A MINIMUM OF 5 YEARS EXPERIENCE ON SIMILAR PROJECTS. PERFORM TAB IN ACCORDANCE WITH THE REQUIREMENTS OF THE TAB PROCEDURAL STANDARD RECOMMENDED BY THE TAB TRADE ASSOCIATION THAT APPROVED THE TAB FIRM'S QUALIFICATIONS. COMPLY WITH REQUIREMENTS OF AABC MN-1, NEBB PROCEDURAL STANDARDS, OR SMACNA HVAC TAB(TABB) AS SUPPLEMENTED AND MODIFIED BY SPECIFICATION APPLICABLE SECTIONS.

SHOP DRAWINGS

1. MICHAEL BAKER INTERNATIONAL WILL NOT ACCEPT REPLICATIONS OF THE DESIGN CONTRACT DOCUMENTS AS ANY NECESSARY PRE-CONSTRUCTION SUBMITTAL THAT IS REQUIRED TO BE REVIEWED BY THE DESIGNER OF RECORD.

MECHANICAL - HVAC REQUIRED CODES, STANDARDS, & REFERENCES

- FLORIDA BUILDING CODE, EIGHTH EDITION - 2023
- FLORIDA MECHANICAL CODE, EIGHTH EDITION - 2023
- ASHRAE 62.1-2016, VENTILATION FOR ACCEPTABLE INDOOR AIR QUALITY
- ASHRAE 90.1-2019, ENERGY STANDARD FOR BUILDINGS EXCEPT LOW-RISE RESIDENTIAL BUILDINGS
- ASHRAE HANDBOOKS: FUNDAMENTALS, REFRIGERATION, HVAC APPLICATIONS, HVAC SYSTEMS AND EQUIPMENT (CURRENT EDITIONS)
- ALL OTHER APPLICABLE ASHRAE HANDBOOKS AND GUIDELINES.
- ALL OTHER APPLICABLE NATIONAL FIRE PROTECTION ASSOCIATION (NFPA) CODES AND STANDARDS
- SMACNA HVAC DUCT CONSTRUCTION STANDARDS, METAL AND FLEXIBLE
- SMACNA, HVAC SYSTEMS – TESTING, ADJUSTING, AND BALANCING

OUTDOOR DESIGN CONDITIONS

LOCATION:		MARIANNA, FLORIDA			ELEVATION
WEATHER STATION (WMO):		747760			108 FT
WEATHER STATION ID:		-			
HIGH DRY BULB CONDITIONS					
SUMMER (0.4%)	96.3	°F DRY BULB	WINTER (99.6%)	28.2	°F DRY BULB
	76.1	°F WET BULB			
HIGH HUMIDITY RATIO CONDITIONS					
SUMMER (0.4%)	83.1	°F DRY BULB	WINTER (99.6%)	69.0	°F DRY BULB
	79.2	°F WET BULB			
	147.7	GRAINS / POUND			

NOTES:

1. **CONDITIONS BASED ON ASHRAE WEATHER DATA**

INDOOR DESIGN CONDITIONS

OCCUPIED ADMIN AND OFFICES					
SUMMER	75.0	°F DRY BULB	WINTER	69.0	°F DRY BULB
	62.5	°F WET BULB			
	55.0	°F MAX DEW POINT		30.0	% RELATIVE HUMIDITY
TELECOM / SERVER ROOMS					
SUMMER	75.0	°F DRY BULB	WINTER	70.0	°F DRY BULB
	30-60	% RELATIVE HUMIDITY		30-60	% RELATIVE HUMIDITY
MECHANICAL AND ELECTRICAL ROOMS					
SUMMER	85.0	°F DRY BULB	WINTER	55.0	°F DRY BULB
UNOCCUPIED SETBACK TEMPERATURES					
SUMMER	5 °F DRY BULB HIGHER THAN INDOOR COOLING		WINTER	10 °F DRY BULB LOWER THAN INDOOR HEATING	
	85.0	°F DRY BULB MAXIMUM		55.0	°F DRY BULB MINIMUM

NOTES:

1. **TEMPERATURES IN ACCORDANCE WITH ASHRAE 90.1-2019**

Michael Baker INTERNATIONAL
12740 GRAN BAY PKWY W
SUITE 2110
JACKSONVILLE, FL 32258

Consultant

THE OFFICIAL RECORD OF THIS SHEET IS THE ELECTRONIC FILE DIGITALLY SIGNED AND SEALED UNDER RULE 61G15-23.004, F.A.C.

SEAL

NO.	DATE	DESCRIPTION

REVISIONS

FDOT

FDOT D3 OPERATIONS CENTER
CHIPLEY, FL 32428

MECHANICAL - GENERAL NOTES

7/7/2026 11:57:46 AM

PHASE IV - FINAL DESIGN SUBMITTAL

Project Number: 4483951-52-01

Date: 07-10-2026

Scale: AS NOTED

Sheet # M-002

© Baker 2018

SPACE AIRFLOWS

SPACE	SA	RA	OA	EA / TA
110 - LACT.	55	55	25	25
116 - EOC KITCHEN	350	350	25	25
117 - EOC STOR. OVERNIGHT	180	180	20	20
118 - OFFICE	200	200	20	20
119 - OFFICE	200	200	20	20
120 - BREAK ROOM	360	360	100	90
124 - STOR. (W/HIGH DENSITY SHELVES)	75	75	20	20
128 - OFFICE	200	200	20	20
129 - OFFICE	200	200	20	20
130 - OFFICE	200	200	20	20
131 - OFFICE	65	65	20	20
132 - OFFICE	200	200	20	20
133 - OFFICE	65	65	20	20
134 - OFFICE	200	200	20	20
135 - DEPT. HEAD	400	400	25	20
136 - DEPUTY	155	155	20	20
137 - OFFICE	65	65	20	20
138 - OFFICE	130	130	20	20
139 - OFFICE	75	75	20	20
140 - OFFICE	130	130	20	20
141 - OFFICE	65	65	20	20
143 - STORAGE/ LARGE PRINTER AREA	220	220	40	40
144 - OFFICE	65	65	20	20
145 - OFFICE	70	70	20	20

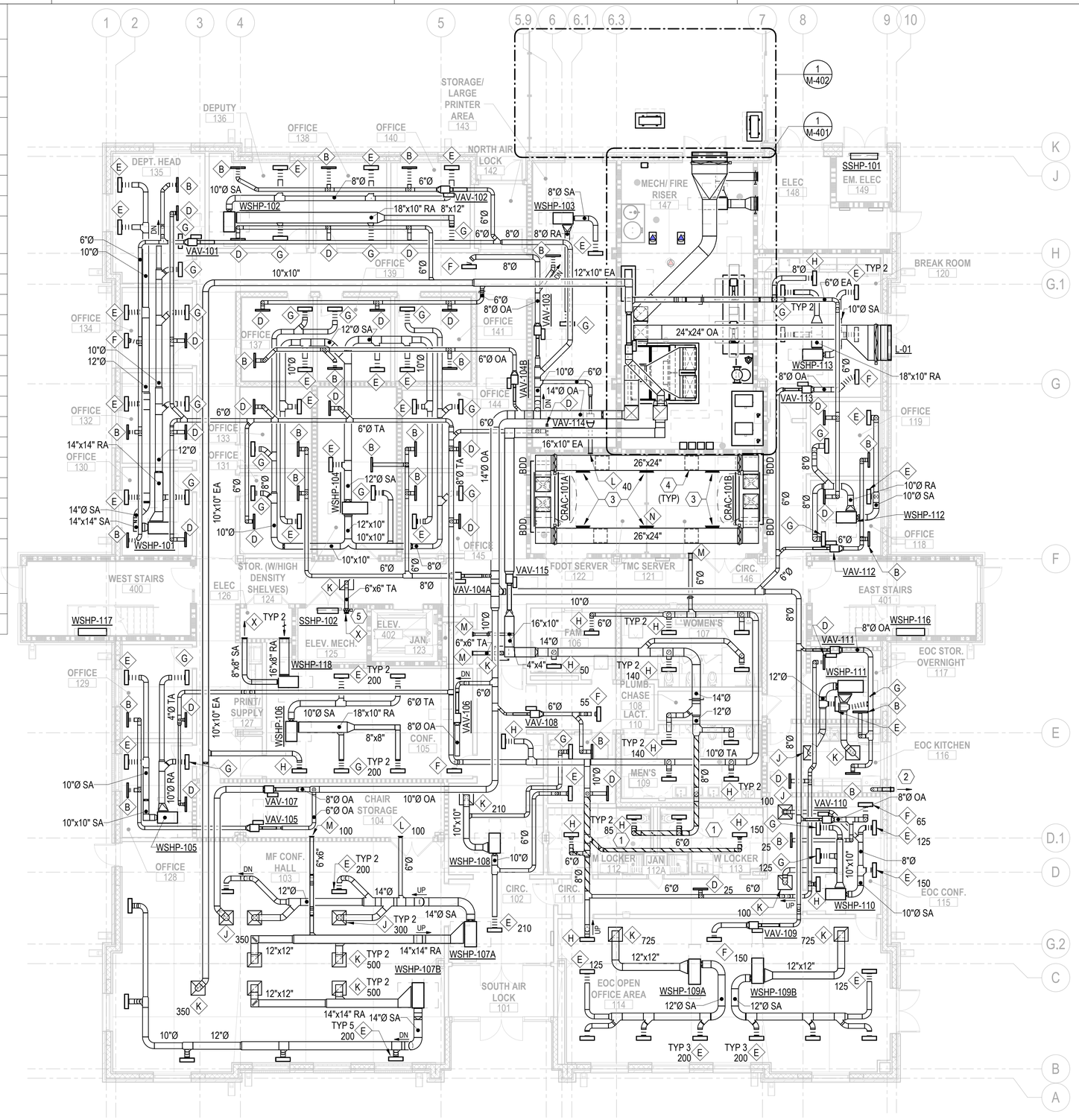

1 HVAC - 1ST FLOOR PLAN
SCALE: 1/8" = 1'-0"

GENERAL NOTES

1. SEE M-001 & M-002 FOR GENERAL NOTES, ABBREVIATIONS, SYMBOLS, AND HVAC PIPE LEGEND.
2. PROVIDE MANUAL VOLUME DAMPERS IN ALL RUN-OUTS TO DIFFUSERS, BRANCH TAKE-OFFS FROM MAIN SUPPLY DUCTS AND ALL OTHER LOCATIONS AS REQUIRED TO PROVIDE PROPER SYSTEM AIRFLOW BALANCING.
3. ALL SUPPLY AIR DUCT RUN-OUTS TO DIFFUSERS AND REGISTERS SHALL BE SIZED TO MATCH THE NECK SIZE OF THE DEVICE AS INDICATED ON THE DIFFUSER, REGISTER AND GRILLE SCHEDULE.
4. SHEET METAL FABRICATOR MAY SUBSTITUTE EQUIVALENT ROUND OR FLAT OVAL DUCTWORK FOR RECTANGULAR SIZES INDICATED. DUCTWORK BETWEEN AHU AND VAV BOXES SHALL BE SIZED TO 0.2" STATIC PRESSURE LOSS PER 100' OF DUCT RUN, DUCTWORK DOWNSTREAM OF VAV BOXES, RETURN, EXHAUST AND TRANSFER AIR DUCTS SHALL BE SIZED TO 0.08/100' OF DUCT RUN. ALL REVISIONS MUST BE COORDINATED WITH ALL OTHER TRADES AND ILLUSTRATED IN DUCTWORK SHOP DRAWINGS FOR APPROVAL.
5. REFER TO SPACE AIRFLOWS SCHEDULE FOR AIR TERMINAL TAGS WITHOUT AIRFLOWS.
6. REFER TO MP SERIES DRAWINGS FOR LOCATION OF WALL MOUNTED CONTROL SENSORS.

KEYNOTES

1. DUCTWORK ROUTED WITHIN LOCKER ROOMS AND FOR 5 LINEAR FEET OUTSIDE OF THE LOCKER ROOM MUST BE CONSTRUCTED OF G90 GALVANIZED STEEL.
2. EA FROM MICROWAVE ABOVE RANGE TO WALL DISCHARGE CAP. MAX 400 CFM. INSTALL PER MANUFACTURER'S REQUIREMENTS. PROVIDE EXHAUST FAN MANUFACTURER'S STANDARD WALL CAP DISCHARGE ACCESSORY COMPLETE WITH BACKDRAFT DAMPER AND BIRD SCREEN.
3. PROVIDE 1-WAY THROW PATTERN AT 45° DOWNWARD ANGLE.
4. PROVIDE 3-WAY THROW PATTERN.
5. MOTORIZDE DAMPER, NORMALLY CLOSED. INTERLOCKED WITH REFRIGERANT LEAK DETECTION OF SPLIT SYSTEM. DAMPER MUST OPEN IF LEAK IS DETECTED AND REMAIN OPEN UNTIL LEAK IS NO LONGER DETECTED. FINAL SIZE OF DUCT MUST BE COORDINATED WITH REQUIRED REFRIGERANT CHARGE OF FINAL SYSTEM SELECTION IN ACCORDANCE WITH ASHRAE AND UL REQUIREMENTS.

PLAN NORTH

0 4' - 0" 8' - 0" 16' - 0"
SCALE: 1/8" = 1' - 0"

Michael Baker INTERNATIONAL
12740 GRAN BAY PKWY W
SUITE 2110
JACKSONVILLE, FL 32258

Consultant

THE OFFICIAL RECORD OF THIS SHEET IS THE ELECTRONIC FILE DIGITALLY SIGNED AND SEALED UNDER RULE 61G15-23.004, F.A.C.

SEAL

NO.	DATE	DESCRIPTION

REVISIONS

FDOT

FDOT D3 OPERATIONS CENTER
CHIPLEY, FL 32428

HVAC - 1ST FLOOR PLAN

Project Number: 4483951-52-01
Date: 07-10-2026
Scale: AS NOTED
Sheet # MH110

PHASE IV - FINAL DESIGN SUBMITTAL 7/7/2026 11:57:55 AM

© Baker 2018

SPACE AIRFLOWS

SPACE	SA	RA	OA	EA / TA
201 - OFFICE	75	75	20	20
202 - OFFICE	185	185	20	20
203 - OFFICE	75	75	20	20
204 - OFFICE	185	185	20	20
205 - OFFICE	75	75	20	20
206 - DEPUTY	210	210	25	20
207 - OFFICE	75	75	20	20
208 - DEPT. HEAD	390	390	25	25
209 - OFFICE	150	150	20	20
210 - OFFICE	75	75	20	20
211 - OFFICE	150	150	20	20
212 - OFFICE	75	75	20	20
213 - OFFICE	150	150	20	20
214 - OFFICE	75	75	20	20
215 - OFFICE	150	150	20	20
216 - OFFICE	75	75	20	20
217 - OFFICE	150	140	20	20
218 - OFFICE	75	75	20	20
219 - EFB STORAGE	75	75	20	20
223 - OFFICE	75	75	20	20
224 - OFFICE	155	155	20	20
225 - OFFICE	155	155	20	20
227 - OFFICE	210	210	20	20
228 - DEPUTY	300	300	25	25
229 - OFFICE	150	150	20	20
230 - OFFICE	75	75	20	20
231 - OFFICE	150	150	20	20
232 - OFFICE	150	150	20	20
233 - OFFICE	75	75	20	20
234 - OFFICE	150	150	20	20
235 - OFFICE	75	75	20	20
236 - OFFICE	150	150	20	20
237 - OFFICE	75	75	20	20
238 - OFFICE	150	150	20	20
239 - DEPT. HEAD	300	300	25	25
240 - DEPUTY	200	200	25	20
242 - OFFICE	145	145	20	20
243 - PRINT/ SUPPLY	200	200	25	25
244 - DEPUTY	210	210	20	20
245 - OFFICE	75	75	20	20
246 - DEPUTY	210	210	25	20
247 - OFFICE	75	75	20	20
248 - OFFICE	150	150	20	20
249 - OFFICE	75	75	20	20
250 - DEPUTY	210	210	20	20
251 - OFFICE	75	75	20	20
252 - DEPUTY	400	400	25	25
253 - OFFICE	200	200	20	20
254 - OFFICE	75	75	20	20
255 - OFFICE	200	200	20	20
256 - OFFICE	200	200	20	20
257 - STOR.	25	25	20	20
259 - STOR.	60	60	20	20

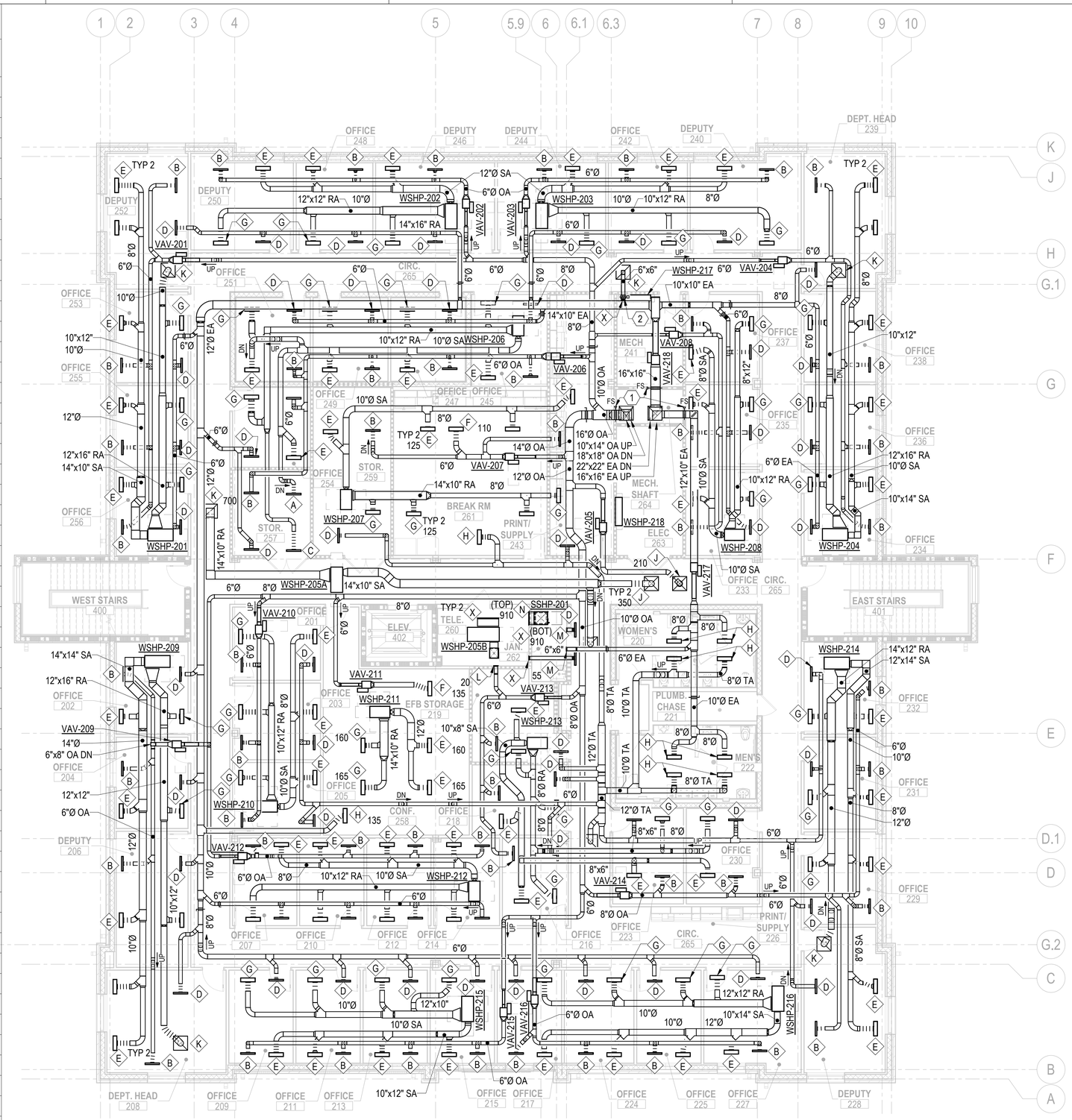

1 HVAC - 2ND FLOOR PLAN
SCALE: 1/8" = 1'-0"

GENERAL NOTES

1. SEE M-001 & M-002 FOR GENERAL NOTES, ABBREVIATIONS, SYMBOLS, AND HVAC PIPE LEGEND.
2. PROVIDE MANUAL VOLUME DAMPERS IN ALL RUN-OUTS TO DIFFUSERS, BRANCH TAKE-OFFS FROM MAIN SUPPLY DUCTS AND ALL OTHER LOCATIONS AS REQUIRED TO PROVIDE PROPER SYSTEM AIRFLOW BALANCING.
3. ALL SUPPLY AIR DUCT RUN-OUTS TO DIFFUSERS AND REGISTERS SHALL BE SIZED TO MATCH THE NECK SIZE OF THE DEVICE AS INDICATED ON THE DIFFUSER, REGISTER AND GRILLE SCHEDULE.
4. SHEET METAL FABRICATOR MAY SUBSTITUTE EQUIVALENT ROUND OR FLAT OVAL DUCTWORK FOR RECTANGULAR SIZES INDICATED. DUCTWORK BETWEEN AHU AND VAV BOXES SHALL BE SIZED TO 0.2" STATIC PRESSURE LOSS PER 100' OF DUCT RUN, DUCTWORK DOWNSTREAM OF VAV BOXES, RETURN, EXHAUST AND TRANSFER AIR DUCTS SHALL BE SIZED TO 0.08/100' OF DUCT RUN. ALL REVISIONS MUST BE COORDINATED WITH ALL OTHER TRADES AND ILLUSTRATED IN DUCTWORK SHOP DRAWINGS FOR APPROVAL.
5. REFER TO SPACE AIRFLOWS SCHEDULE FOR AIR TERMINAL TAGS WITHOUT AIRFLOWS.
6. REFER TO MP SERIES DRAWINGS FOR LOCATION OF WALL MOUNTED CONTROL SENSORS.

KEYNOTES

1. PROVIDE FIRE/SMOKE DAMPER AND DUCT SMOKE DETECTOR AT SHAFT PENETRATIONS. COORDINATE WITH FIRE ALARM CONTRACTOR.
2. MOTORIZDE DAMPER, NORMALLY CLOSED. INTERLOCKED WITH REFRIGERANT LEAK DETECTION OF SPLIT SYSTEM. DAMPER MUST OPEN IF LEAK IS DETECTED AND REMAIN OPEN UNTIL LEAK IS NO LONGER DETECTED. FINAL SIZE OF DUCT MUST BE COORDINATED WITH REQUIRED REFRIGERANT CHARGE OF FINAL SYSTEM SELECTION IN ACCORDANCE WITH ASHRAE AND UL REQUIREMENTS.

PLAN NORTH

SCALE: 1/8" = 1' - 0"

Michael Baker INTERNATIONAL
12740 GRAN BAY PKWY W
SUITE 2110
JACKSONVILLE, FL 32258

Consultant

THE OFFICIAL RECORD OF THIS SHEET IS THE ELECTRONIC FILE DIGITALLY SIGNED AND SEALED UNDER RULE 61G15-23.004, F.A.C.

SEAL

NO.	DATE	DESCRIPTION

REVISIONS

FDOT

FDOT D3 OPERATIONS CENTER
CHIPLEY, FL 32428

HVAC - 2ND FLOOR PLAN

Project Number: 4483951-52-01
Date: 07-10-2026
Scale: AS NOTED
Sheet # MH120

PHASE IV - FINAL DESIGN SUBMITTAL 7/7/2026 11:58:03 AM

© Baker 2018

SPACE AIRFLOWS

SPACE	SA	RA	OA	EA / TA
301 - OFFICE	175	175	20	20
303 - OFFICE	175	175	20	20
304 - OFFICE	175	175	20	20
305 - DEPUTY	300	300	20	20
306 - OFFICE	175	175	20	20
307 - OFFICE	75	75	20	20
308 - OFFICE	175	175	20	20
309 - OFFICE	75	75	20	20
310 - OFFICE	175	175	20	20
311 - OFFICE	75	75	20	20
312 - BREAK ROOM	230	230	75	75
316 - OFFICE	150	150	20	20
317 - OFFICE	150	150	20	20
319 - DEPUTY	270	270	20	20
320 - OFFICE	150	150	20	20
321 - STOR.	175	175	20	20
322 - OFFICE	120	120	20	20
323 - OFFICE	85	85	20	20
324 - DEPUTY	175	175	20	20
326 - DEPT. HEAD	250	250	25	20
327 - OFFICE	120	120	20	20
328 - DEPUTY	150	150	20	20
329 - OFFICE	75	75	20	20
330 - OFFICE	75	75	20	20
331 - OFFICE	120	120	20	20
332 - OFFICE	75	75	20	20
333 - OFFICE	120	120	20	20
334 - OFFICE	75	75	20	20
335 - OFFICE	120	120	20	20
336 - DEPT. HEAD	325	325	20	20
337 - OFFICE	200	200	20	20
339 - OFFICE	200	200	20	20
341 - OFFICE	75	75	20	20
342 - OFFICE	75	75	20	20
344 - OFFICE	75	75	20	20
345 - OFFICE	75	75	20	20

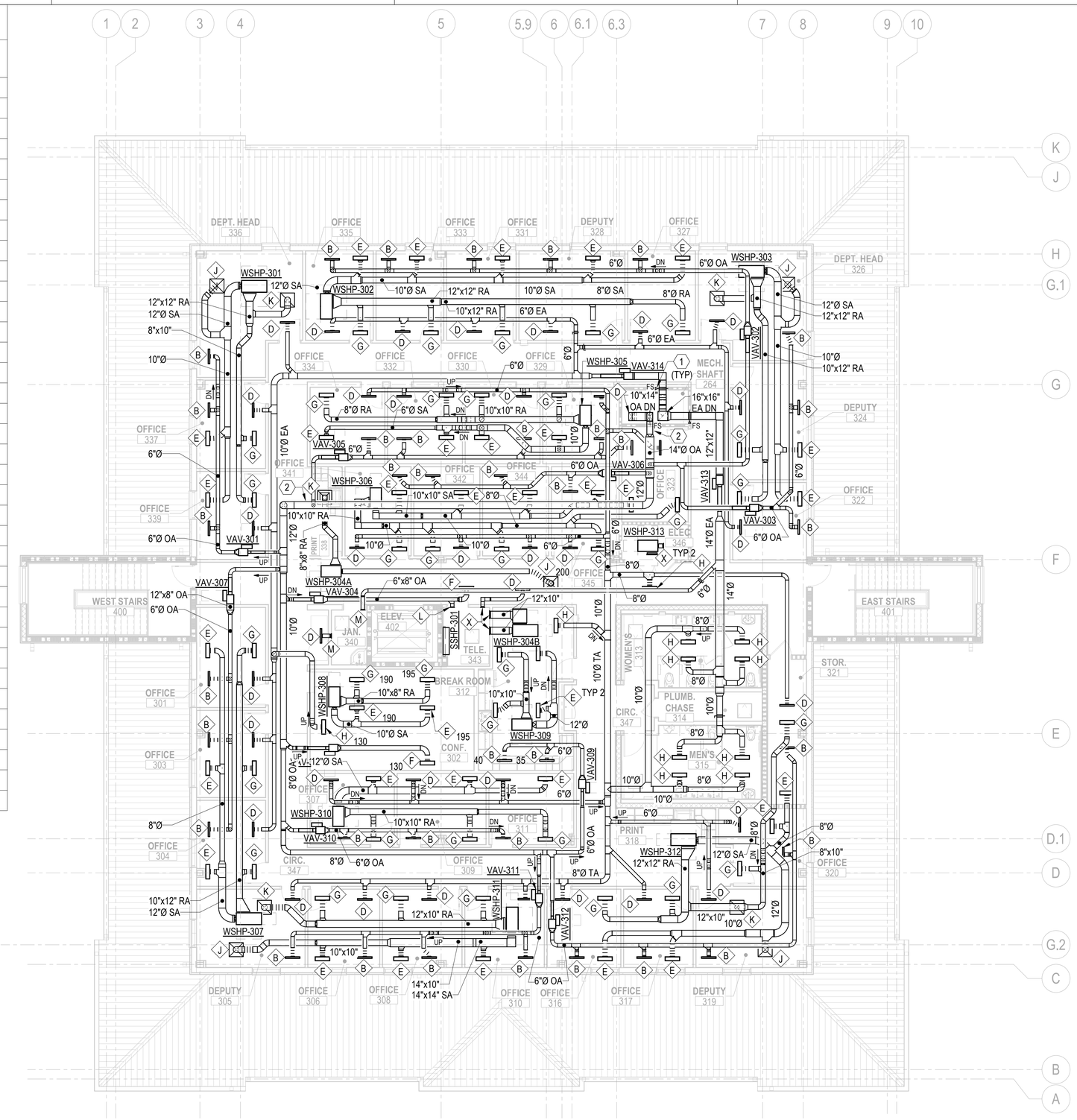

1 HVAC - 3RD FLOOR PLAN
SCALE: 1/8" = 1'-0"

GENERAL NOTES

1. SEE M-001 & M-002 FOR GENERAL NOTES, ABBREVIATIONS, SYMBOLS, AND HVAC PIPE LEGEND.
2. PROVIDE MANUAL VOLUME DAMPERS IN ALL RUN-OUTS TO DIFFUSERS, BRANCH TAKE-OFFS FROM MAIN SUPPLY DUCTS AND ALL OTHER LOCATIONS AS REQUIRED TO PROVIDE PROPER SYSTEM AIRFLOW BALANCING.
3. ALL SUPPLY AIR DUCT RUN-OUTS TO DIFFUSERS AND REGISTERS SHALL BE SIZED TO MATCH THE NECK SIZE OF THE DEVICE AS INDICATED ON THE DIFFUSER, REGISTER AND GRILLE SCHEDULE.
4. SHEET METAL FABRICATOR MAY SUBSTITUTE EQUIVALENT ROUND OR FLAT OVAL DUCTWORK FOR RECTANGULAR SIZES INDICATED. DUCTWORK BETWEEN AHU AND VAV BOXES SHALL BE SIZED TO 0.2" STATIC PRESSURE LOSS PER 100' OF DUCT RUN, DUCTWORK DOWNSTREAM OF VAV BOXES, RETURN, EXHAUST AND TRANSFER AIR DUCTS SHALL BE SIZED TO 0.08/100' OF DUCT RUN. ALL REVISIONS MUST BE COORDINATED WITH ALL OTHER TRADES AND ILLUSTRATED IN DUCTWORK SHOP DRAWINGS FOR APPROVAL.
5. REFER TO SPACE AIRFLOWS SCHEDULE FOR AIR TERMINAL TAGS WITHOUT AIRFLOWS.
6. REFER TO MP SERIES DRAWINGS FOR LOCATION OF WALL MOUNTED CONTROL SENSORS.

KEYNOTES

1. PROVIDE FIRE/SMOKE DAMPER AND DUCT SMOKE DETECTOR AT SHAFT PENETRATIONS. COORDINATE WITH FIRE ALARM CONTRACTOR.
2. ROUTE DUCT THROUGH ATTIC. COORDINATE ROUTING WITH TRUSS DESIGN.

PLAN NORTH

SCALE: 1/8" = 1' - 0"

Michael Baker INTERNATIONAL
12740 GRAN BAY PKWY W
SUITE 2110
JACKSONVILLE, FL 32258

Consultant

THE OFFICIAL RECORD OF THIS SHEET IS THE ELECTRONIC FILE DIGITALLY SIGNED AND SEALED UNDER RULE 61G15-23.004, F.A.C.

SEAL

NO.	DATE	DESCRIPTION

REVISIONS

FDOT

FDOT D3 OPERATIONS CENTER
CHIPLEY, FL 32428

HVAC - 3RD FLOOR PLAN

Project Number: 4483951-52-01
Date: 07-10-2026
Scale: AS NOTED
Sheet # MH130

PHASE IV - FINAL DESIGN SUBMITTAL 7/7/2026 11:58:10 AM

© Baker 2018

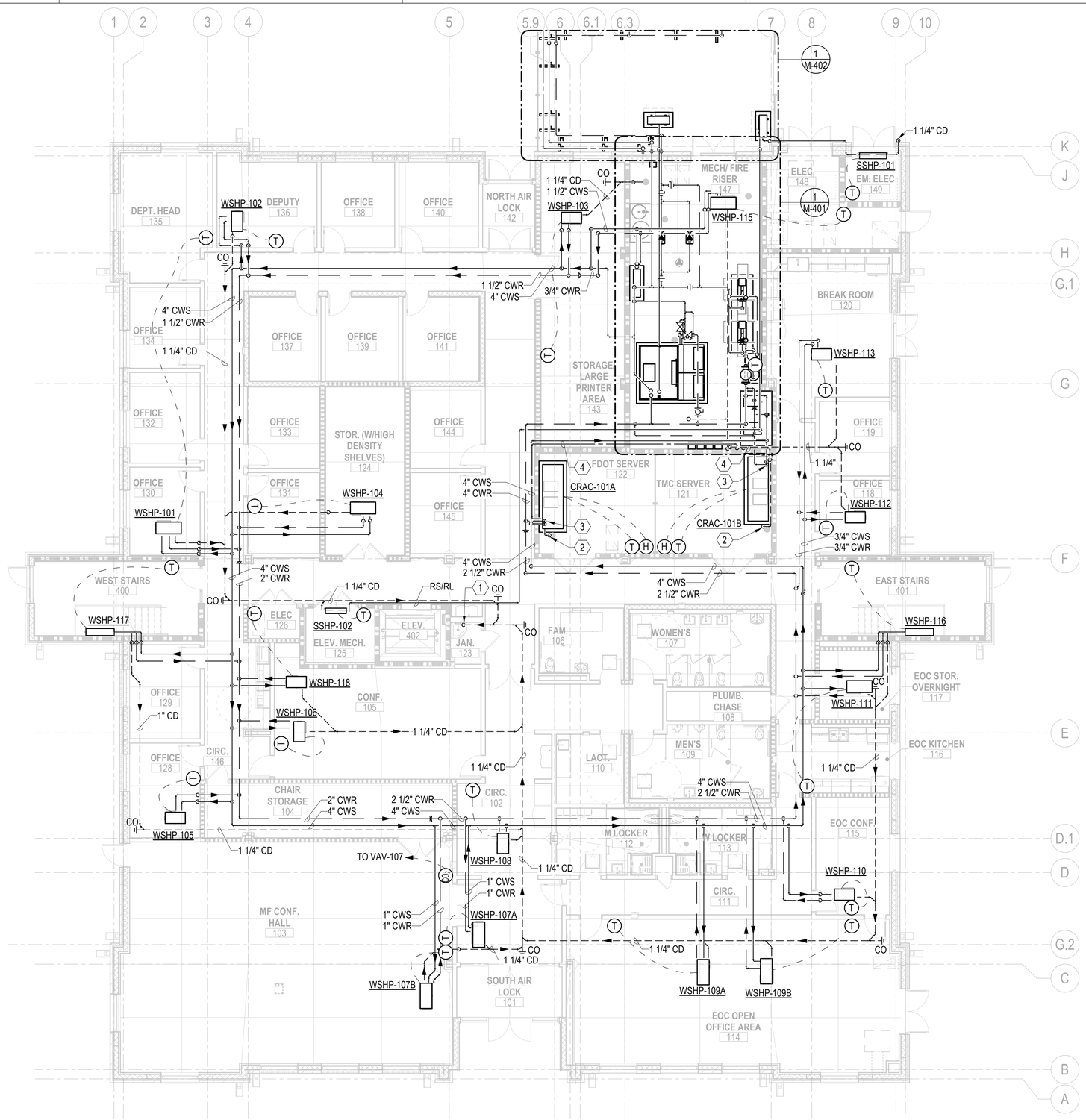

1 PIPING - 1ST FLOOR PLAN
SCALE: 1/8" = 1'-0"

PLAN NORTH

SCALE: 1/8" = 1' - 0"

GENERAL NOTES

1. SEE M-001 & M-002 FOR GENERAL NOTES, ABBREVIATIONS, SYMBOLS, AND HVAC PIPE LEGEND.
2. ALL FINAL RUN-OUTS TO EQUIPMENT SHALL 3/4" UNLESS OTHERWISE NOTED.
3. PROVIDE AN AIR VENT AT THE HIGH POINT OF EACH DROP IN THE SYSTEM, ALL PIPING SHALL GRADE TO LOW POINTS; PROVIDE HOSE END DRAIN VALVES AT THE BOTTOM OF ALL RISERS AND LOW POINTS.
4. INSTALL PIPING SO THAT ALL VALVES, STRAINERS, UNIONS, TRAPS, FLANGES AND OTHER APPURTENANCES REQUIRING ACCESS ARE EASILY ACCESSIBLE. PROVIDE ACCESS DOORS/PANELS IN HARD CEILINGS.
5. ALL VALVES FOR SHUT OFF/ISOLATION SERVICE, STRAINERS, UNIONS, TRAPS, FLANGES AND OTHER PIPING APPURTENANCES SHALL BE FULL SIZE OF PIPE BEFORE REDUCING TO MAKE CONNECTIONS TO EQUIPMENT AND CONTROLS. CONTROL VALVES AND BALANCING VALVES SHALL BE SIZED FOR PROPER OPERATION AT THE FLOW RATE OF THE DEVICES SERVED.
6. UNIONS AND/OR FLANGES SHALL BE INSTALLED AT EACH PIECE OF EQUIPMENT, IN BYPASSES, AND IN LONG PIPE RUNS (100' OR MORE) TO PERMIT DISASSEMBLY FOR ALTERATIONS AND REPAIRS.
7. INSTALL ALL PIPING WITHOUT FORCING OR SPRINGING.
8. ROUTE ALL CONDENSATE PIPING AT 1/8" PER 1'-0" SLOPE TOWARD POINT OF TERMINATION. PROVIDE CLEANOUT AT ALL CHANGES OF DIRECTION GREATER THAN 45°.

KEYNOTES

1. 1 1/4" CD DOWN TO MOP RECEPTOR. TERMINATE PIPE OPEN ENDED APPROXIMATELY 3" ABOVE RECEPTOR.
2. 1 1/4" CD TO FLOOR DRAIN. TERMINATE APPROX 1" ABOVE DRAIN COVER.
3. ROUTE 2 1/2" CWS/R AND 1/2" CW TO CRAC UNIT.
4. 1/2" CW MAKEUP FROM BACKFLOW PREVENTER TO CRAC UNIT HUMIDIFIER MAKEUP. REFER TO PLUMBING DRAWINGS FOR CONTINUATION AND FOR BACKFLOW PREVENTER INFORMATION.

Michael Baker INTERNATIONAL
12740 GRAN BAY PKWY W
SUITE 2110
JACKSONVILLE, FL 32258

Consultant

THE OFFICIAL RECORD OF THIS SHEET IS THE ELECTRONIC FILE DIGITALLY SIGNED AND SEALED UNDER RULE 61G15-23.004, F.A.C.

SEAL

NO.	DATE	DESCRIPTION

REVISIONS

FDOT

FDOT D3 OPERATIONS CENTER
CHIPLEY, FL 32428

PIPING - 1ST FLOOR PLAN

Project Number: 4483951-52-01
Date: 07-10-2026
Scale: AS NOTED
Sheet # MP110

PHASE IV - FINAL DESIGN SUBMITTAL 7/7/2026 11:58:16 AM

© Baker 2018

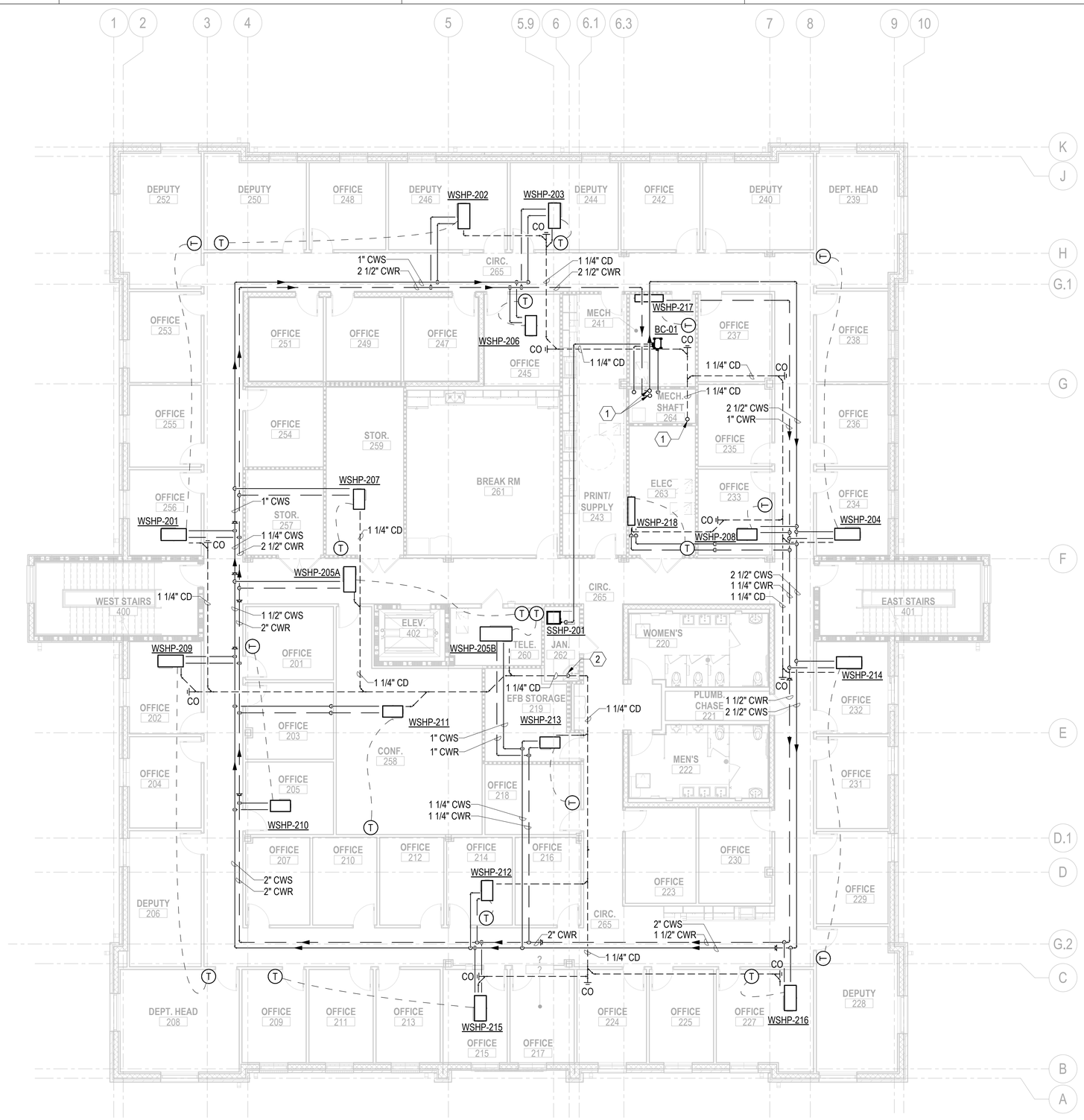

1 PIPING - 2ND FLOOR PLAN
SCALE: 1/8" = 1'-0"

GENERAL NOTES

1. SEE M-001 & M-002 FOR GENERAL NOTES, ABBREVIATIONS, SYMBOLS, AND HVAC PIPE LEGEND.
2. ALL FINAL RUN-OUTS TO EQUIPMENT SHALL 3/4" UNLESS OTHERWISE NOTED.
3. PROVIDE AN AIR VENT AT THE HIGH POINT OF EACH DROP IN THE SYSTEM, ALL PIPING SHALL GRADE TO LOW POINTS; PROVIDE HOSE END DRAIN VALVES AT THE BOTTOM OF ALL RISERS AND LOW POINTS.
4. INSTALL PIPING SO THAT ALL VALVES, STRAINERS, UNIONS, TRAPS, FLANGES AND OTHER APPURTENANCES REQUIRING ACCESS ARE EASILY ACCESSIBLE. PROVIDE ACCESS DOORS/PANELS IN HARD CEILINGS.
5. ALL VALVES FOR SHUT OFF/ISOLATION SERVICE, STRAINERS, UNIONS, TRAPS, FLANGES AND OTHER PIPING APPURTENANCES SHALL BE FULL SIZE OF PIPE BEFORE REDUCING TO MAKE CONNECTIONS TO EQUIPMENT AND CONTROLS. CONTROL VALVES AND BALANCING VALVES SHALL BE SIZED FOR PROPER OPERATION AT THE FLOW RATE OF THE DEVICES SERVED.
6. UNIONS AND/OR FLANGES SHALL BE INSTALLED AT EACH PIECE OF EQUIPMENT, IN BYPASSES, AND IN LONG PIPE RUNS (100' OR MORE) TO PERMIT DISASSEMBLY FOR ALTERATIONS AND REPAIRS.
7. INSTALL ALL PIPING WITHOUT FORCING OR SPRINGING.
8. ROUTE ALL CONDENSATE PIPING AT 1/8" PER 1'-0" SLOPE TOWARD POINT OF TERMINATION. PROVIDE CLEANOUT AT ALL CHANGES OF DIRECTION GREATER THAN 45°.

KEYNOTES

1. ALL PIPING ROUTED WITHIN MECHANICAL SHAFT AND MECHANICAL ROOM MUST BE NONCOMBUSTIBLE MATERIAL. PVC OR OTHER PLASTIC PIPING MUST NOT BE INSTALLED WITHIN THE SHAFT.
2. 1 1/4" CD DOWN TO MOP RECEPTOR. TERMINATE PIPE OPEN ENDED APPROXIMATELY 3" ABOVE RECEPTOR.

PLAN NORTH

0 4' - 0" 8' - 0" 16' - 0"
SCALE: 1/8" = 1' - 0"

Michael Baker
INTERNATIONAL
12740 GRAN BAY PKWY W
SUITE 2110
JACKSONVILLE, FL 32258

Consultant

THE OFFICIAL RECORD OF THIS SHEET IS THE ELECTRONIC FILE DIGITALLY SIGNED AND SEALED UNDER RULE 61G15-23.004, F.A.C.

SEAL

NO.	DATE	DESCRIPTION

REVISIONS

FDOT

FDOT D3 OPERATIONS CENTER
CHIPLEY, FL 32428

PIPING - 2ND FLOOR PLAN

7/7/2026 11:58:20 AM

PHASE IV - FINAL DESIGN SUBMITTAL

Project Number: 4483951-52-01
Date: 07-10-2026
Scale: AS NOTED
Sheet # MP120

© Baker 2018

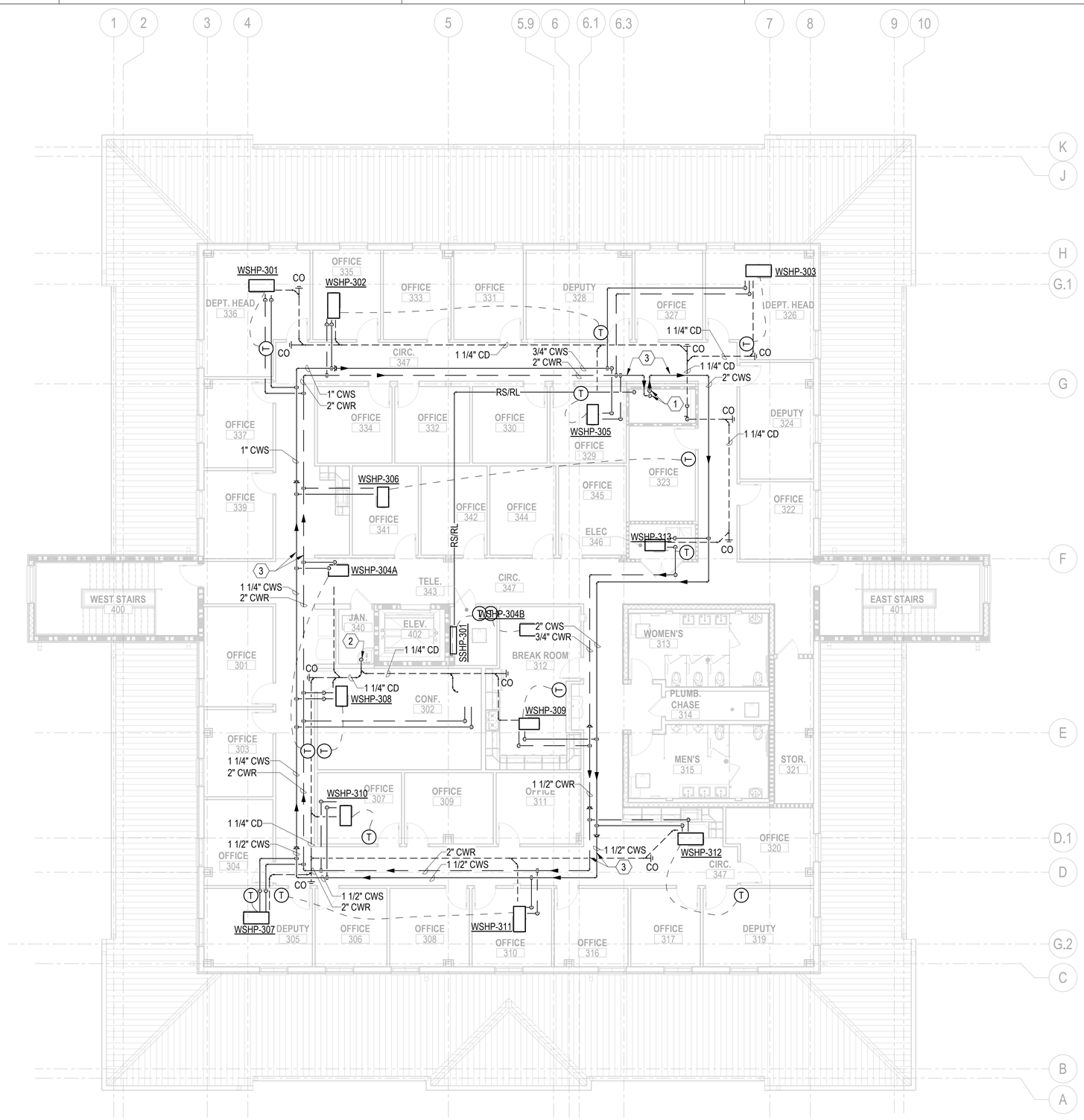

1 PIPING - 3RD FLOOR PLAN
SCALE: 1/8" = 1'-0"

GENERAL NOTES

1. SEE M-001 & M-002 FOR GENERAL NOTES, ABBREVIATIONS, SYMBOLS, AND HVAC PIPE LEGEND.
2. ALL FINAL RUN-OUTS TO EQUIPMENT SHALL 3/4" UNLESS OTHERWISE NOTED.
3. PROVIDE AN AIR VENT AT THE HIGH POINT OF EACH DROP IN THE SYSTEM, ALL PIPING SHALL GRADE TO LOW POINTS; PROVIDE HOSE END DRAIN VALVES AT THE BOTTOM OF ALL RISERS AND LOW POINTS.
4. INSTALL PIPING SO THAT ALL VALVES, STRAINERS, UNIONS, TRAPS, FLANGES AND OTHER APPURTENANCES REQUIRING ACCESS ARE EASILY ACCESSIBLE. PROVIDE ACCESS DOORS/PANELS IN HARD CEILINGS.
5. ALL VALVES FOR SHUT OFF/ISOLATION SERVICE, STRAINERS, UNIONS, TRAPS, FLANGES AND OTHER PIPING APPURTENANCES SHALL BE FULL SIZE OF PIPE BEFORE REDUCING TO MAKE CONNECTIONS TO EQUIPMENT AND CONTROLS. CONTROL VALVES AND BALANCING VALVES SHALL BE SIZED FOR PROPER OPERATION AT THE FLOW RATE OF THE DEVICES SERVED.
6. UNIONS AND/OR FLANGES SHALL BE INSTALLED AT EACH PIECE OF EQUIPMENT, IN BYPASSES, AND IN LONG PIPE RUNS (100' OR MORE) TO PERMIT DISASSEMBLY FOR ALTERATIONS AND REPAIRS.
7. INSTALL ALL PIPING WITHOUT FORCING OR SPRINGING.
8. ROUTE ALL CONDENSATE PIPING AT 1/8" PER 1'-0" SLOPE TOWARD POINT OF TERMINATION. PROVIDE CLEANOUT AT ALL CHANGES OF DIRECTION GREATER THAN 45°.

KEYNOTES

1. ALL PIPING ROUTED WITHIN MECHANICAL SHAFT AND MECHANICAL ROOM MUST BE NONCOMBUSTIBLE MATERIAL. PVC OR OTHER PLASTIC PIPING MUST NOT BE INSTALLED WITHIN THE SHAFT.
2. 1 1/4" CD DOWN TO MOP RECEPTOR. TERMINATE PIPE OPEN ENDED APPROXIMATELY 3" ABOVE RECEPTOR.
3. ROUTE CWS/R PIPING THROUGH ATTIC. COORDINATE ROUTING WITH TRUSS DESIGN.

PLAN NORTH
N

0 4' - 0" 8' - 0" 16' - 0"
SCALE: 1/8" = 1' - 0"

Michael Baker
INTERNATIONAL
12740 GRAN BAY PKWY W
SUITE 2110
JACKSONVILLE, FL 32258

Consultant

THE OFFICIAL RECORD OF THIS SHEET IS THE ELECTRONIC FILE DIGITALLY SIGNED AND SEALED UNDER RULE 61G15-23.004, F.A.C.

SEAL

NO.	DATE	DESCRIPTION

REVISIONS

FDOT

FDOT D3 OPERATIONS CENTER
CHIPLEY, FL 32428

PIPING - 3RD FLOOR PLAN

Project Number: 4483951-52-01
Date: 07-10-2026
Scale: AS NOTED
Sheet # MP130

PHASE IV - FINAL DESIGN SUBMITTAL 7/7/2026 11:58:24 AM

© Baker 2018

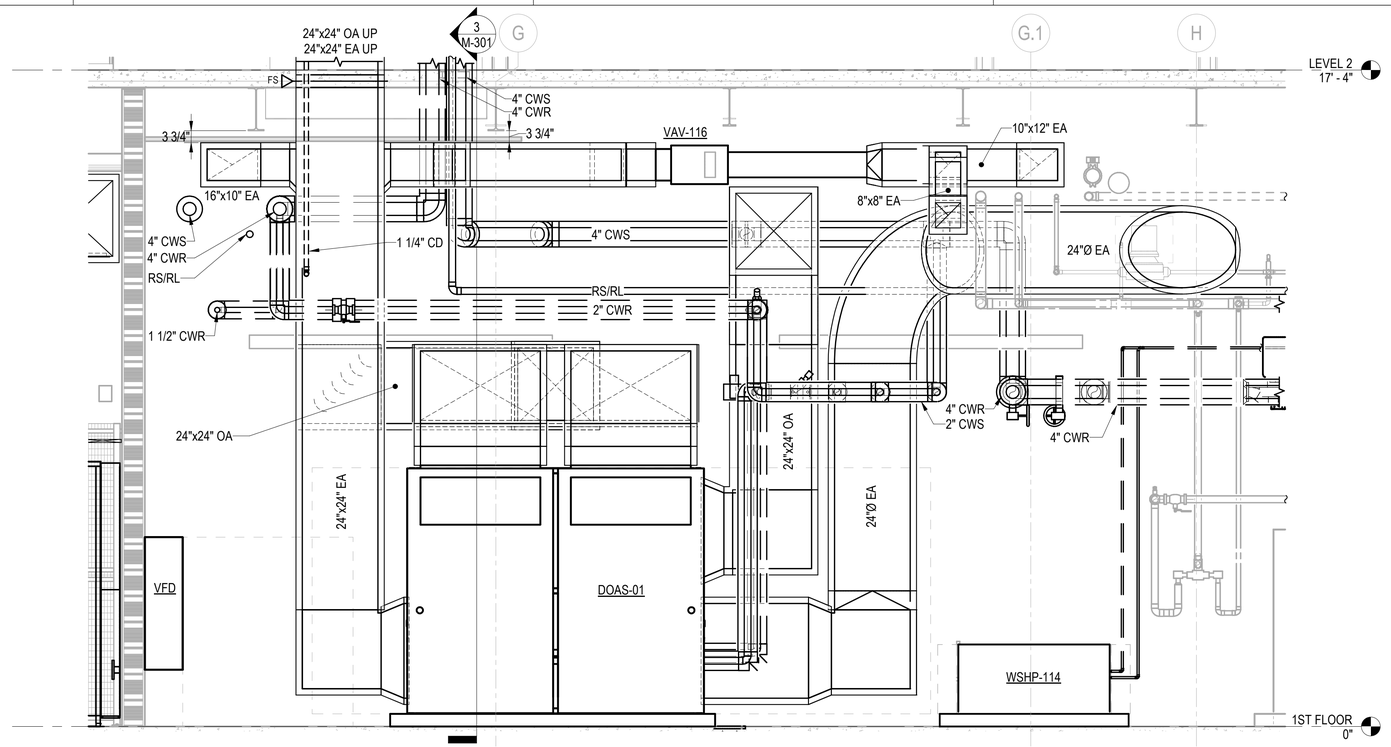

1 MECHANICAL - MECH ROOM SECTION
SCALE: 1/2" = 1'-0"

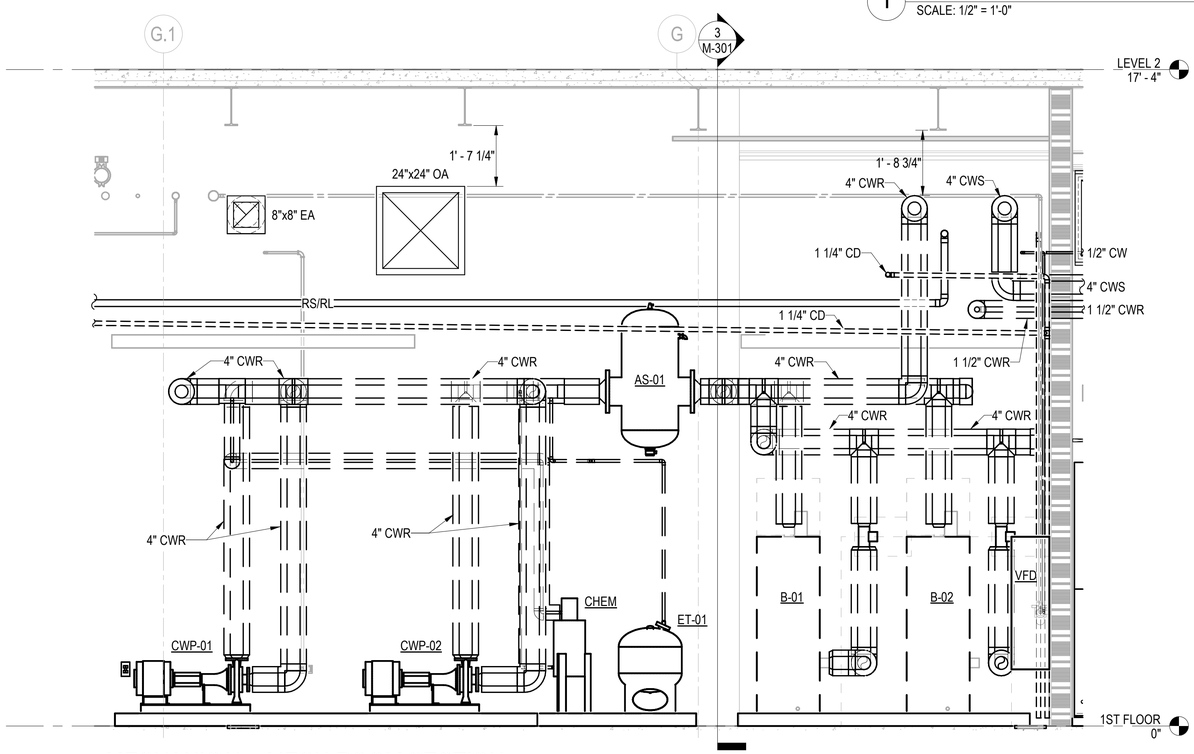

2 MECHANICAL - MECH ROOM SECTION
SCALE: 1/2" = 1'-0"

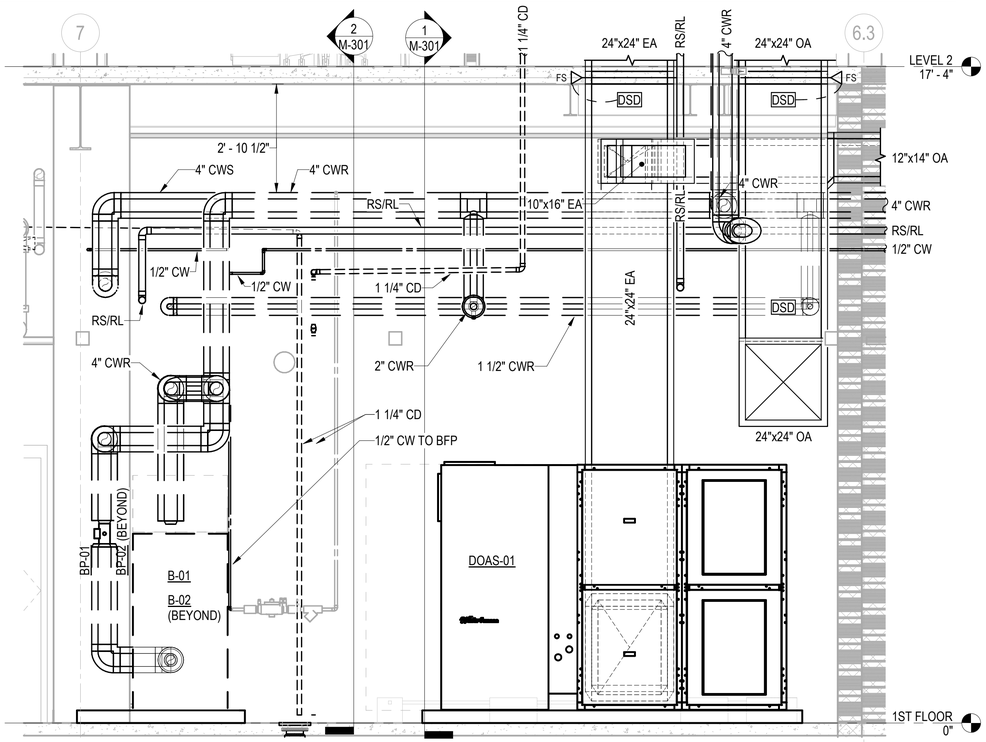

3 MECHANICAL - MECH ROOM SECTION
SCALE: 1/2" = 1'-0"

0 1' - 0" 2' - 0" 4' - 0"
SCALE: 1/2" = 1' - 0"

Michael Baker
INTERNATIONAL
12740 GRAN BAY PKWY W
SUITE 2110
JACKSONVILLE, FL 32258

Consultant

THE OFFICIAL RECORD OF THIS SHEET IS THE ELECTRONIC FILE DIGITALLY SIGNED AND SEALED UNDER RULE 61G15-23.004, F.A.C.

SEAL

NO.	DATE	DESCRIPTION

REVISIONS

FDOT

FDOT D3 OPERATIONS CENTER
CHIPLEY, FL 32428

MECHANICAL - SECTIONS

Project Number: 4483951-52-01
Date: 07-10-2026
Scale: AS NOTED
Sheet # M-301

PHASE IV - FINAL DESIGN SUBMITTAL
7/7/2026 11:58:34 AM

© Baker 2018

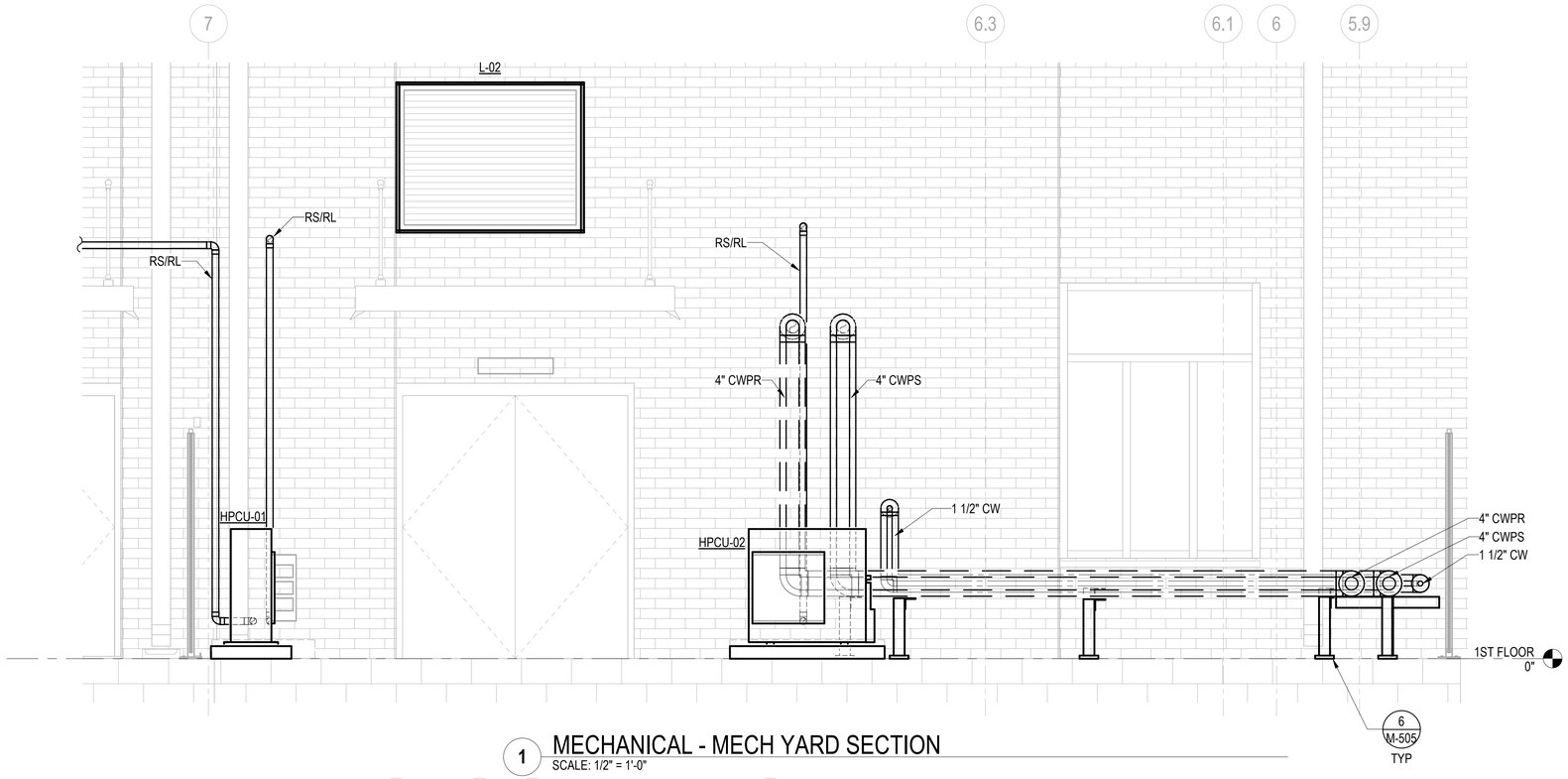

1 MECHANICAL - MECH YARD SECTION
SCALE: 1/2" = 1'-0"

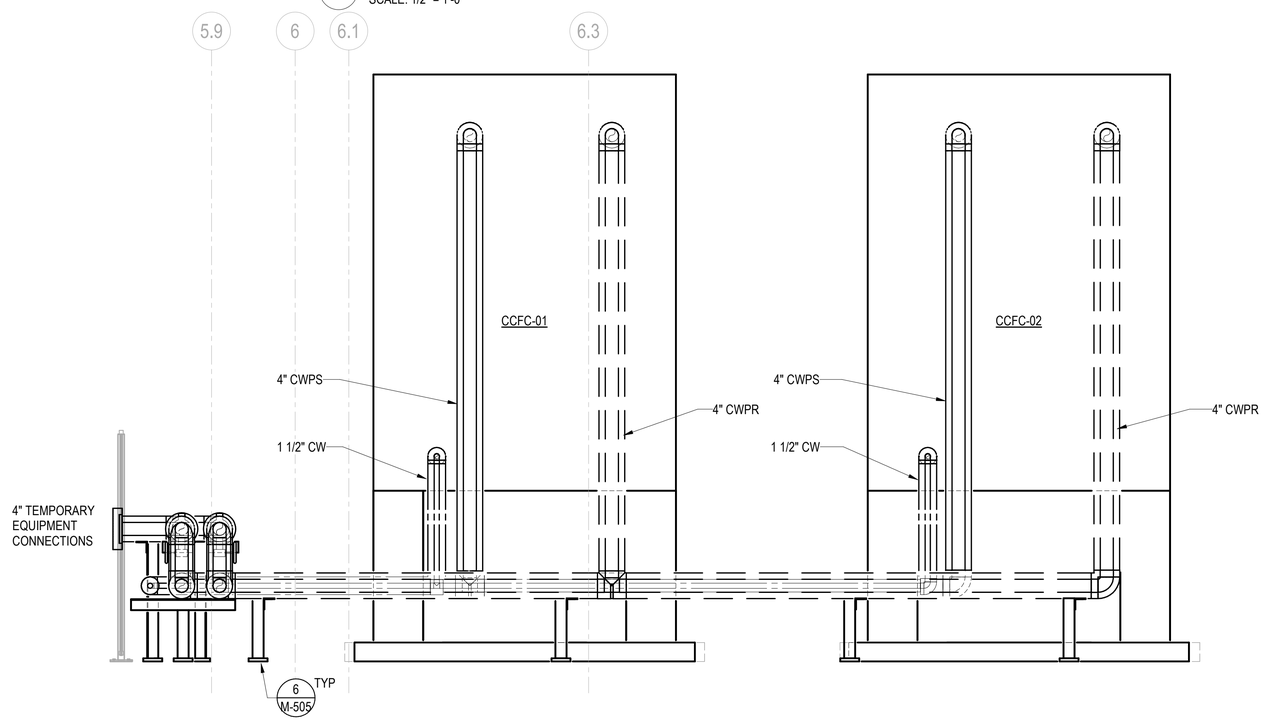

2 MECHANICAL - MECH YARD SECTION
SCALE: 1/2" = 1'-0"

0 1' - 0" 2' - 0" 4' - 0"
SCALE: 1/2" = 1' - 0"

Michael Baker
INTERNATIONAL
12740 GRAN BAY PKWY W
SUITE 2110
JACKSONVILLE, FL 32258

Consultant

THE OFFICIAL RECORD OF THIS SHEET IS THE ELECTRONIC FILE DIGITALLY SIGNED AND SEALED UNDER RULE 61G15-23.004, F.A.C.

SEAL

NO.	DATE	DESCRIPTION

REVISIONS

FDOT

FDOT D3 OPERATIONS CENTER
CHIPLEY, FL 32428

MECHANICAL - SECTIONS

Project Number: 4483951-52-01
Date: 07-10-2026
Scale: AS NOTED
Sheet # M-302

PHASE IV - FINAL DESIGN SUBMITTAL
7/7/2026 11:58:39 AM

© Baker 2018

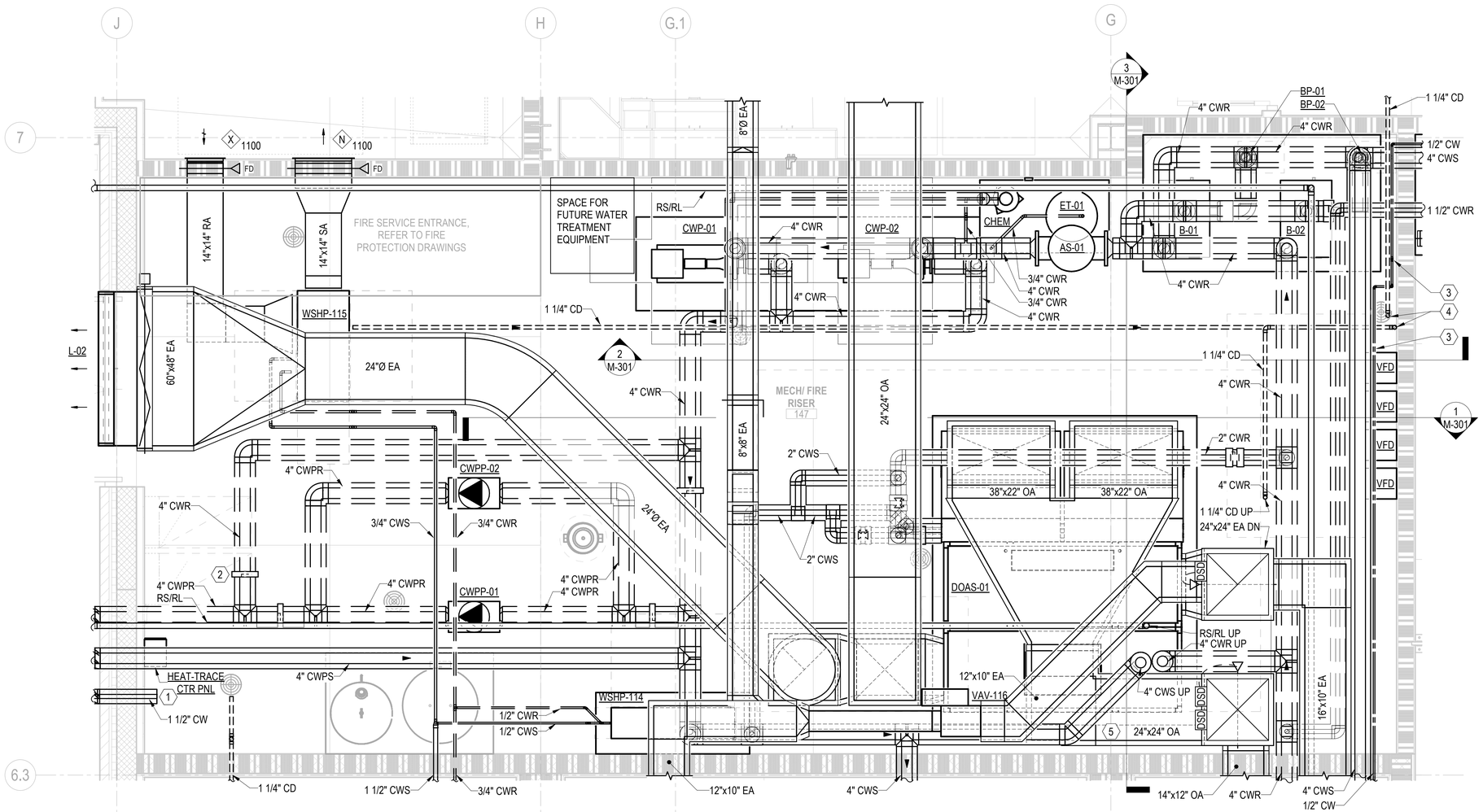

1 ENLARGED MECHANICAL ROOM PLAN
SCALE: 1/2" = 1'-0"

GENERAL NOTES

1. SEE M-001 & M-002 FOR GENERAL NOTES, ABBREVIATIONS, SYMBOLS, AND HVAC PIPE LEGEND.
2. SEE M-702 PIPING DIAGRAM FOR ADDITIONAL PIPE SIZES.

KEYNOTES

1. CW MAKEUP TO CCFCS. CONNECT TO CW PIPING FROM BACKFLOW PREVENTER, REFER TO PLUMBING DRAWINGS FOR CONTINUATION.
2. MANUAL BUTTERFLY VALVE, NORMALLY CLOSED. VALVE TO BE OPENED ONLY WHEN UTILIZING TEMPORARY HEATING/COOLING PLANT EQUIPMENT.
3. 1/2" CW MAKEUP FROM BACKFLOW PREVENTER TO CRAC UNIT HUMIDIFIER MAKEUP. REFER TO PLUMBING DRAWINGS FOR CONTINUATION AND FOR BACKFLOW PREVENTER INFORMATION.
4. 1 1/4" CD TO FLOOR DRAIN. TERMINATE APPROX 1" ABOVE DRAIN COVER.
5. PROVIDE DUCT SMOKE DETECTOR IN SUPPLY AND EXHAUST DUCTWORK TO/FROM DOAS-01. LOCATE SMOKE DETECTOR BETWEEN DOAS-01 DUCT CONNECTIONS AND THE CLOSEST CONNECTION. REFER TO FIRE ALARM CONSTRUCTION DOCUMENTS FOR ADDITIONAL INFORMATION.

PLAN NORTH N

0 1' - 0" 2' - 0" 4' - 0"
SCALE: 1/2" = 1' - 0"

Michael Baker
INTERNATIONAL
12740 GRAN BAY PKWY W
SUITE 2110
JACKSONVILLE, FL 32258

Consultant

THE OFFICIAL RECORD OF THIS SHEET IS THE ELECTRONIC FILE DIGITALLY SIGNED AND SEALED UNDER RULE 61G15-23.004, F.A.C.

SEAL

NO.	DATE	DESCRIPTION

REVISIONS

FDOT

FDOT D3 OPERATIONS CENTER
CHIPLEY, FL 32428

MECHANICAL - ENLARGED PLAN

7/7/2026 11:58:44 AM

PHASE IV - FINAL DESIGN SUBMITTAL

Project Number: 4483951-52-01
Date: 07-10-2026
Scale: AS NOTED
Sheet # M-401

© Baker 2018

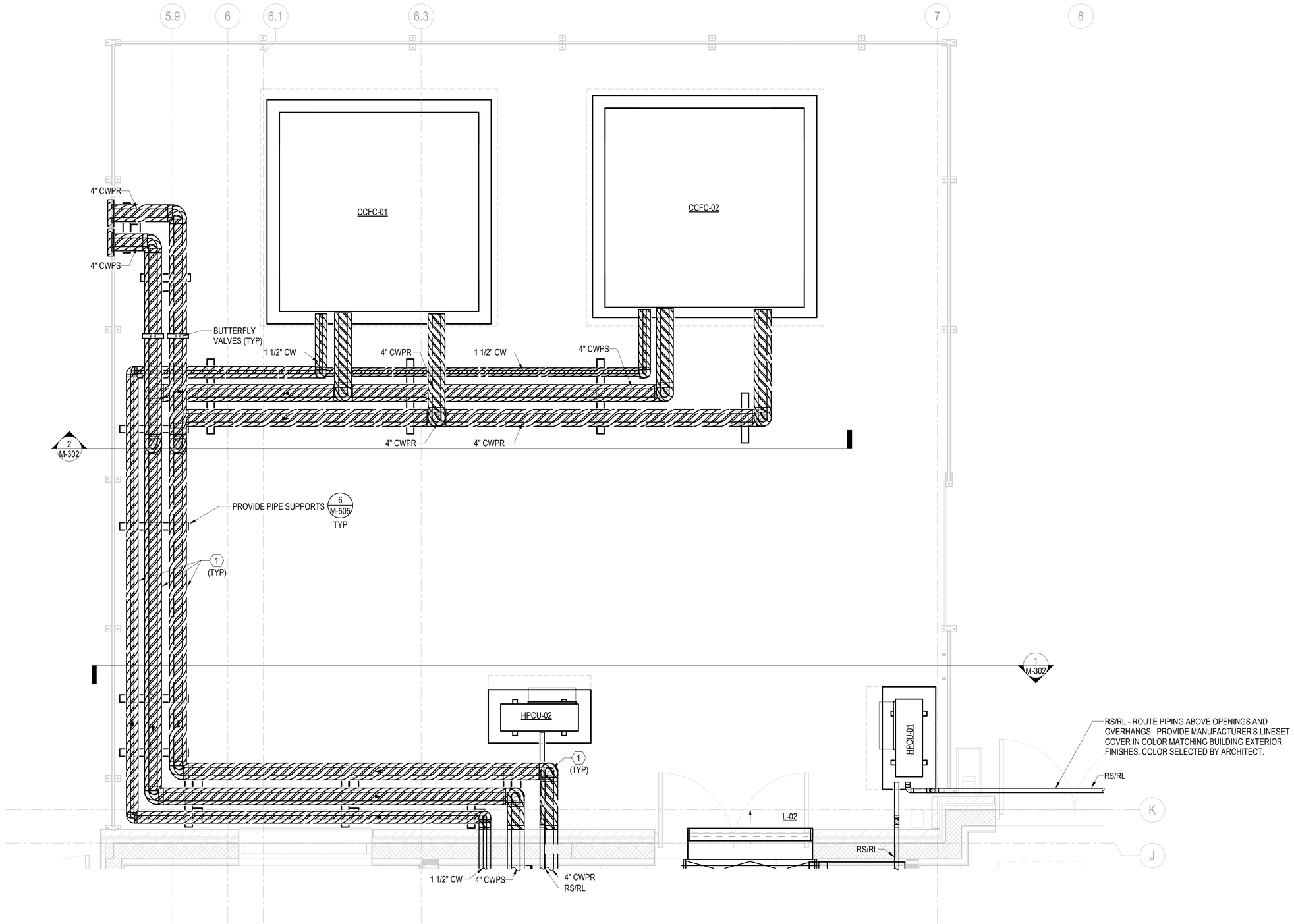

1 ENLARGED MECHANICAL YARD PLAN
SCALE: 1/2" = 1'-0"

GENERAL NOTES

1. SEE M-001 & M-002 FOR GENERAL NOTES, ABBREVIATIONS, SYMBOLS, AND HVAC PIPE LEGEND.
2. SEE M-702 PIPING DIAGRAM FOR ADDITIONAL PIPE SIZES.

KEYNOTES

1. PROVIDE HEAT TRACE ON EXTERIOR CWS, CWR, AND CW PIPING.

PLAN NORTH
N

0 1' - 0" 2' - 0" 4' - 0"
SCALE: 1/2" = 1' - 0"

Michael Baker
INTERNATIONAL
12740 GRAN BAY PKWY W
SUITE 2110
JACKSONVILLE, FL 32258

Consultant

THE OFFICIAL RECORD OF THIS SHEET IS THE ELECTRONIC FILE DIGITALLY SIGNED AND SEALED UNDER RULE 61G15-23.004, F.A.C.

SEAL

NO.	DATE	DESCRIPTION

REVISIONS

FDOT

FDOT D3 OPERATIONS CENTER
CHIPLEY, FL 32428

MECHANICAL - ENLARGED PLAN

Project Number: 4483951-52-01
Date: 07-10-2026
Scale: AS NOTED
Sheet # M-402

PHASE IV - FINAL DESIGN SUBMITTAL
7/7/2026 11:58:49 AM

© Baker 2018

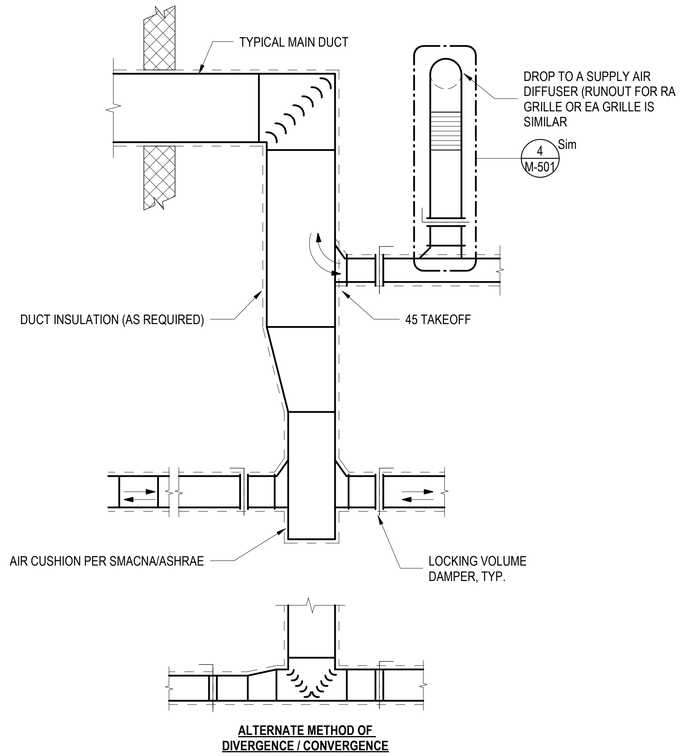

1 TYPICAL SUPPLY OR RETURN DUCT
SCALE:NTS

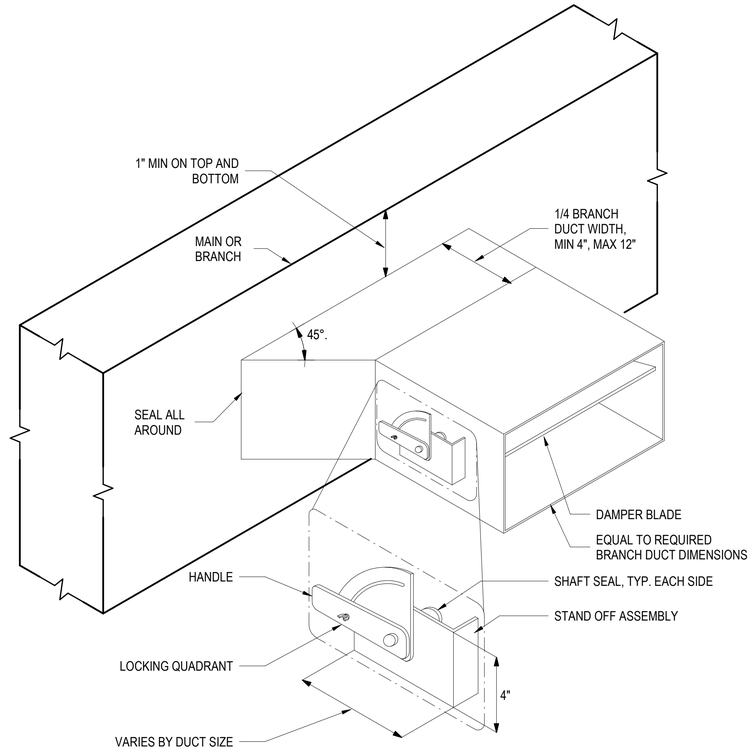

NOTES:
1. PROVIDE WITH LOCKING MANUAL BALANCING VOLUME DAMPER. COORDINATE DAMPER LOCATION WITH PLANS.
2. SINGLE BLADE DAMPER SHOWN. MULTIPLE BLADE DAMPER IS SIMILAR.
3. ROUND BRANCH TAKEOFF IS SIMILAR.

2 TYPICAL BRANCH DUCT TAKEOFF FITTING
SCALE:NTS

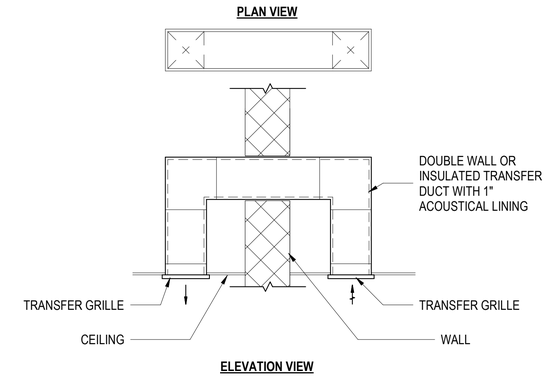

NOTES:
1. SIZE OF TRANSFER DUCT SHOWN ON PLAN INDICATES ACTUAL CLEAR INSIDE DIMENSIONS.

3 TRANSFER DUCT LINED THRU FULL HT WALL
SCALE:NTS

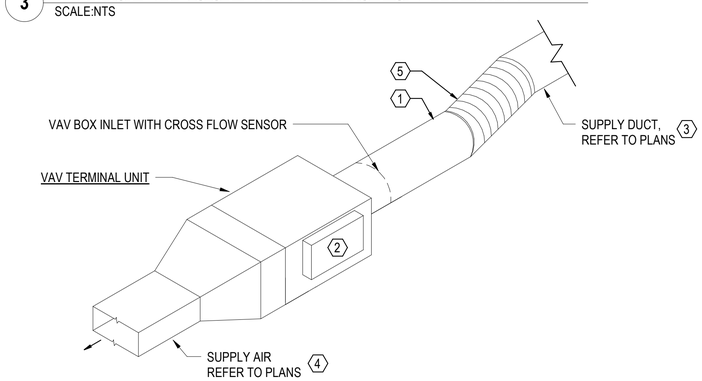

KEYNOTES:
1. PROVIDE A MINIMUM OF 6 DUCT DIAMETERS OF STRAIGHT RIGID DUCT BEFORE VAV BOX INLET CONNECTION.
2. PROVIDE A MINIMUM OF 3 FT CLEARANCE IN FRONT OF THE ELECTRICAL PANEL.
3. TRANSITION DUCTWORK SIZE INDICATED ON PLANS IF PLAN SIZE VARIES FROM VAV BOX OUTLET SIZE.
4. PROVIDE 4 FT TO FIRST BRANCH TAKEOFF.
5. MAX 6 IN FLEXIBLE CONNECTION FOR BOX POSITION.

6 VAV TERMINAL UNIT
SCALE:NTS

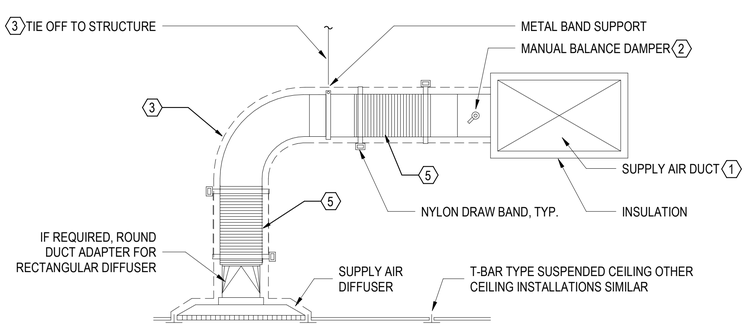

NOTES:
1. RECTANGULAR MAIN DUCT SHOWN, INSTALLATION WITH ROUND MAIN DUCT IS SIMILAR.
2. IF SPIN-IN TAKE-OFFS ARE NOT USED AND EXPANDED TAKE-OFFS ARE USED, INSTALL DAMPER AFTER TAKE-OFF PER SMACNA.
3. PROVIDE PROPER INSTALLATION AND SUPPORT PER SMACNA AND FLEX DUCT PER MFGR'S RECOMMENDATIONS FOR NO KINKING OR SIGNIFICANT AREA REDUCTION.
4. PROVIDE INSULATION ON ALL DUCT AND ON THE BACK OF ALL SUPPLY AIR DIFFUSERS.
5. MAX 5 FT LENGTH OF FLEXIBLE DUCT FULLY EXTENDED. FLEXIBLE DUCT MAY BE IN VERTICAL SEGMENT BETWEEN ELBOW AND DIFFUSER. DO NOT INSTALL FLEX DUCT IN BOTH LOCATIONS.

4 SUPPLY AIR DIFFUSER HARD ELBOW W/ FLEX
SCALE: NTS

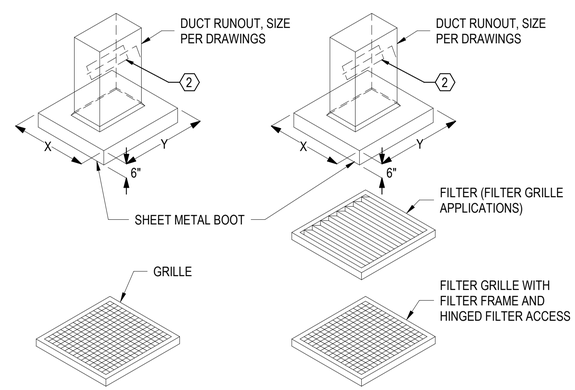

NOTES:
1. REFER TO GRILLE, REGISTER AND DIFFUSER SCHEDULE FOR X & Y DUCT NECK SIZE CONNECTION TO RETURN GRILLE.
2. WHERE CFM IS SHOWN ON PLANS, DAMPER SHALL BE PLACED IN RETURN / EXHAUST DUCTWORK LOCATION SHOWN ON PLANS.

5 DUCTED RETURN AIR CONNECTION
SCALE:NTS

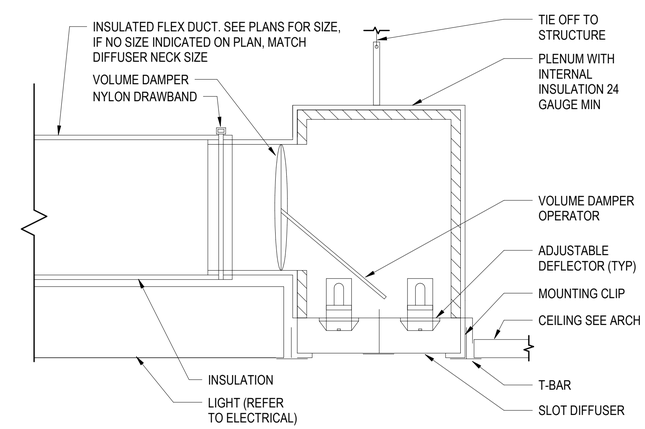

7 SUPPLY AIR DIFFUSER LINEAR SLOT
SCALE:NTS

Michael Baker INTERNATIONAL
12740 GRAN BAY PKWY W
SUITE 2110
JACKSONVILLE, FL 32258

Consultant

THE OFFICIAL RECORD OF THIS SHEET IS THE ELECTRONIC FILE DIGITALLY SIGNED AND SEALED UNDER RULE 61G15-23.004, F.A.C.

SEAL

NO.	DATE	DESCRIPTION

REVISIONS

FDOT

FDOT D3 OPERATIONS CENTER
CHIPLEY, FL 32428

MECHANICAL - DETAILS

Project Number: 4483951-52-01
Date: 07-10-2026
Scale: AS NOTED
Sheet # M-501

PHASE IV - FINAL DESIGN SUBMITTAL 7/7/2026 11:58:49 AM

© Baker 2018

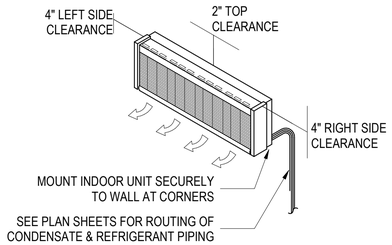

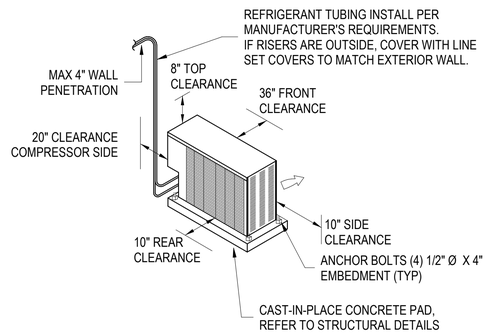

1 SPLIT SYSTEM AIR CONDITIONING UNIT (DUCTLESS)
SCALE: 3/8" = 1'-0"

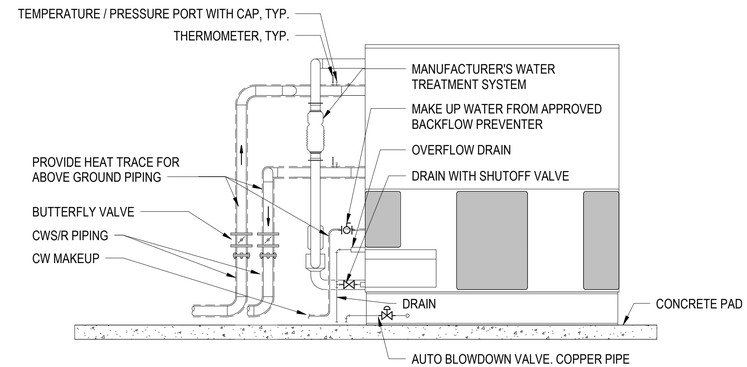

2 CLOSED CIRCUIT FLUID COOLER
SCALE:NTS

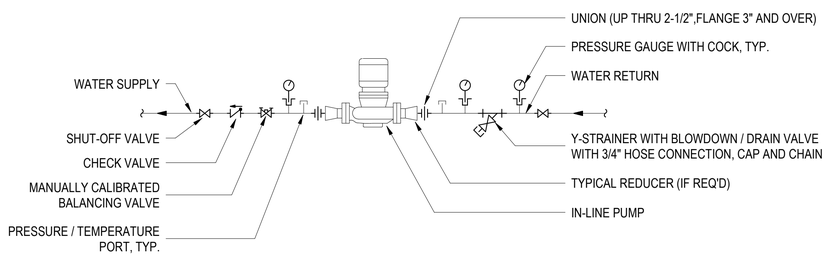

NOTES:
1. SUPPORT PUMP FROM WALL, FLOOR, OR STEEL, DO NOT PIPE SUPPORT.
2. PUMP INSTALLATION IS DIAGRAMMATIC AND INTENDED TO SHOW THE MAJOR COMPONENTS REQUIRED FOR INSTALLATION. THE INSTALLED PIPING CONFIGURATION MUST BE BASED ON THE ACTUAL PUMP PROVIDED. THE CONTRACTOR WILL SUBMIT FOR APPROVAL A COORDINATION DRAWING SHOWING PUMP, PIPING, AND ACCESSORIES AS REQUIRED BY THIS INSTALLATION DETAIL.

3 PUMP - INLINE
SCALE:NTS

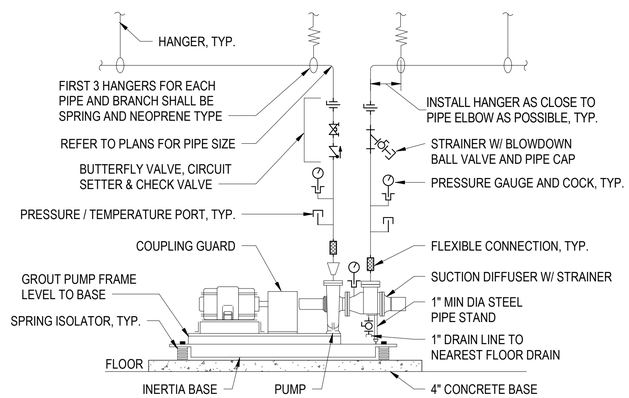

NOTES:
1. SEE SPECIFICATION SECTION "PUMPS" FOR Y STRAINER OPTION.
2. PUMP INSTALLATION IS DIAGRAMMATIC AND INTENDED TO SHOW THE MAJOR COMPONENTS REQUIRED FOR INSTALLATION. THE INSTALLED PIPING CONFIGURATION MUST BE BASED ON THE ACTUAL PUMP PROVIDED. THE CONTRACTOR WILL SUBMIT FOR APPROVAL A COORDINATION DRAWING SHOWING PUMP, PIPING, AND ACCESSORIES AS REQUIRED BY THIS INSTALLATION DETAIL.

4 PUMP - BASE MOUNTED SINGLE SUCTION
SCALE:NTS

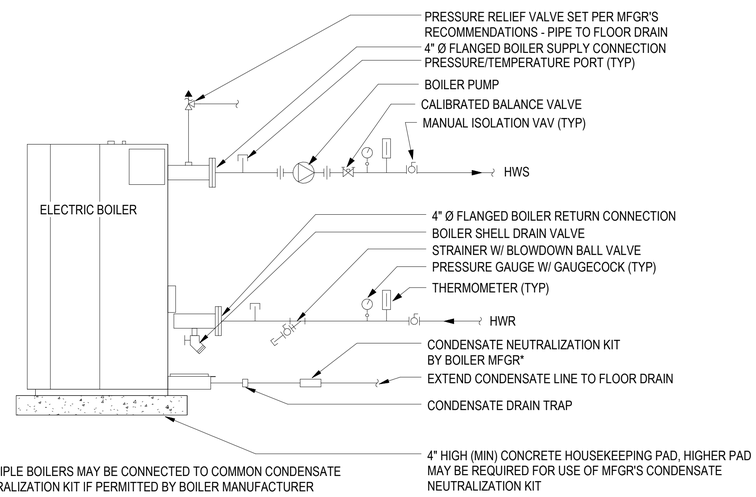

5 BOILER PIPING DETAIL
SCALE:NTS

Michael Baker INTERNATIONAL
12740 GRAN BAY PKWY W
SUITE 2110
JACKSONVILLE, FL 32258

Consultant

THE OFFICIAL RECORD OF THIS SHEET IS THE ELECTRONIC FILE DIGITALLY SIGNED AND SEALED UNDER RULE 61G15-23.004, F.A.C.

SEAL

NO.	DATE	DESCRIPTION

REVISIONS

FDOT

FDOT D3 OPERATIONS CENTER
CHIPLEY, FL 32428

MECHANICAL - DETAILS

Project Number: 4483951-52-01
Date: 07-10-2026
Scale: AS NOTED
Sheet # M-502

PHASE IV - FINAL DESIGN SUBMITTAL 7/7/2026 11:58:50 AM

© Baker 2018

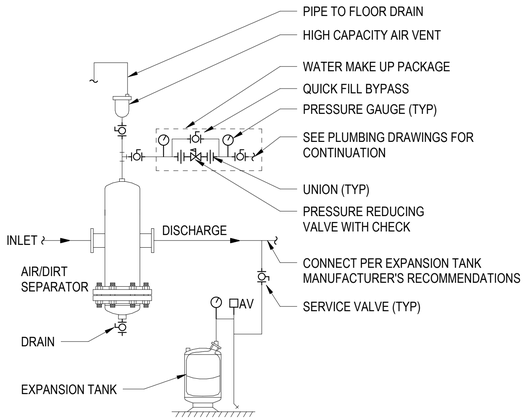

1 AIR SEPARATOR AND EXPANSION TANK
SCALE:NTS

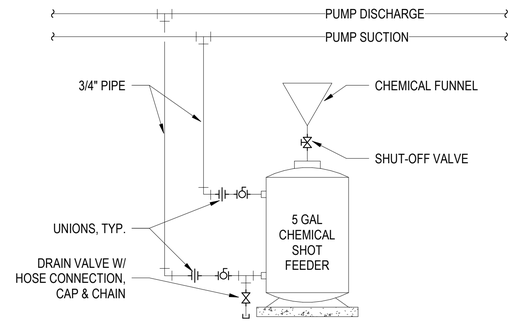

NOTES:
1. PROVIDE WITH 5 MICRON BAG FILTER.

2 CHEMICAL SHOT FEEDER
SCALE: NTS

POSITIVE PRESSURE APPLICATION (BLOW THROUGH UNIT)
"X" = TOTAL FAN SP + 2"
"Y" = 2" MINIMUM

NEGATIVE PRESSURE APPLICATION (DRAW THROUGH UNIT)
"X" = 1/2 "Y"
"Y" = TOTAL FAN SP + 2"

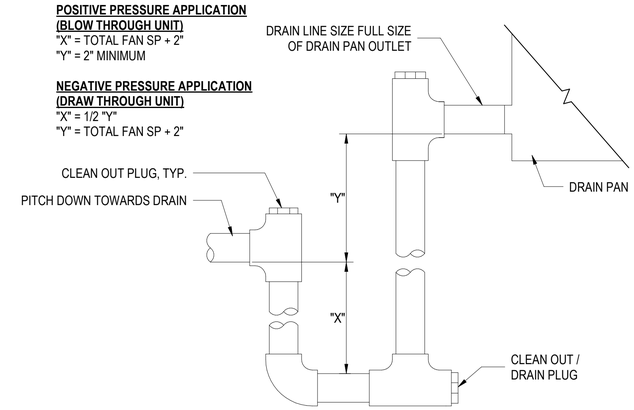

3 CONDENSATE TRAP/DRAIN
SCALE:NTS

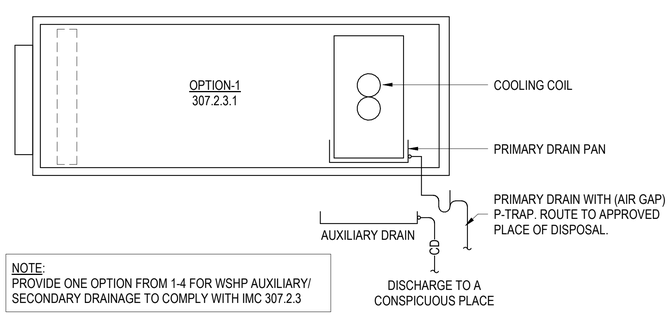

NOTE:
PROVIDE ONE OPTION FROM 1-4 FOR WSHP AUXILIARY/ SECONDARY DRAINAGE TO COMPLY WITH IMC 307.2.3

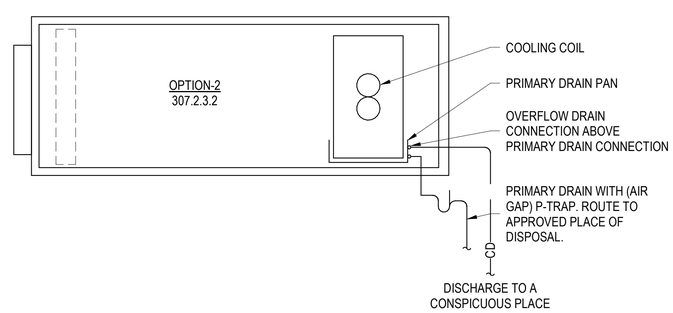

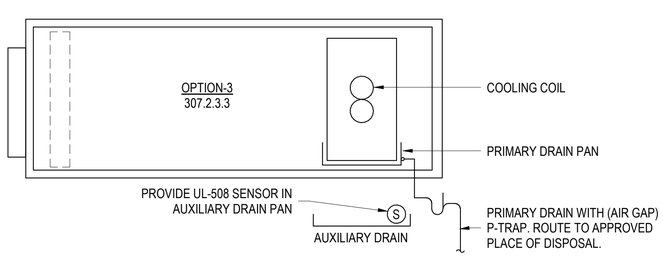

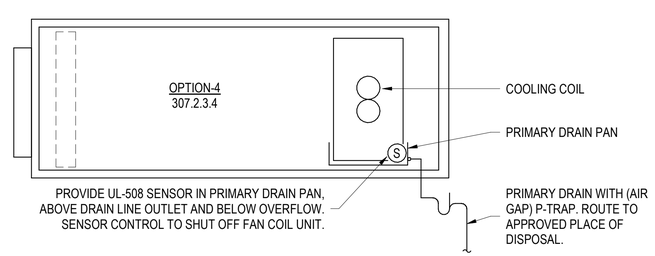

4 AUXILARY-SECONDARY DRAIN SYSTEM (FBC, MECHANICAL 8TH ED.)
SCALE:NTS

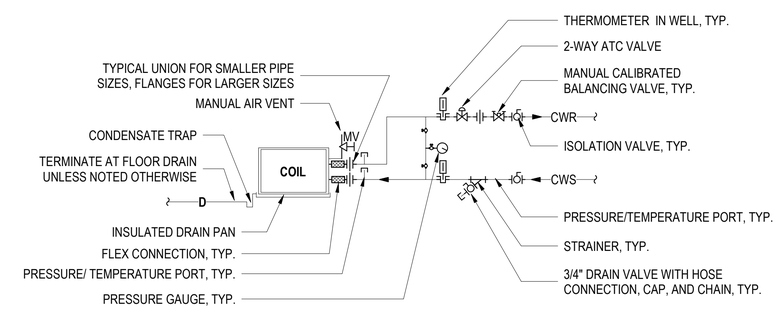

NOTES:
1. DRAIN PAN & TRAP REQUIRED ON HYDRONIC HEATING COILS UNLESS NOTED OTHERWISE.

5 COIL PIPING W/2-WAY VALVES
SCALE:NTS

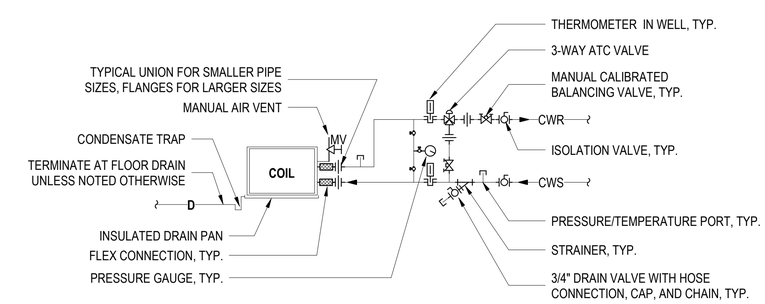

NOTES:
1. INSTALL 3-WAY VALVES AT COILS/LOADS OUT IN SYSTEMS AS REQUIRED TO ALLOW SYSTEM MINIMUM FLOWS, AND TO ALLOW PIPING SYSTEM THROUGHOUT BUILDING TO STAY AT TEMPERATURE.
2. DRAIN PAN & TRAP REQUIRED ON HYDRONIC HEATING COILS UNLESS NOTED OTHERWISE.

6 COIL PIPING W/3-WAY VALVES
SCALE: 3/4" = 1'-0"

Michael Baker INTERNATIONAL
12740 GRAN BAY PKWY W
SUITE 2110
JACKSONVILLE, FL 32258

Consultant

THE OFFICIAL RECORD OF THIS SHEET IS THE ELECTRONIC FILE DIGITALLY SIGNED AND SEALED UNDER RULE 61G15-23.004, F.A.C.

SEAL

NO.	DATE	DESCRIPTION

REVISIONS

FDOT

FDOT D3 OPERATIONS CENTER
CHIPLEY, FL 32428

MECHANICAL - DETAILS

Project Number: 4483951-52-01
Date: 07-10-2026
Scale: AS NOTED
Sheet # M-503

PHASE IV - FINAL DESIGN SUBMITTAL 7/7/2026 11:58:50 AM

© Baker 2018

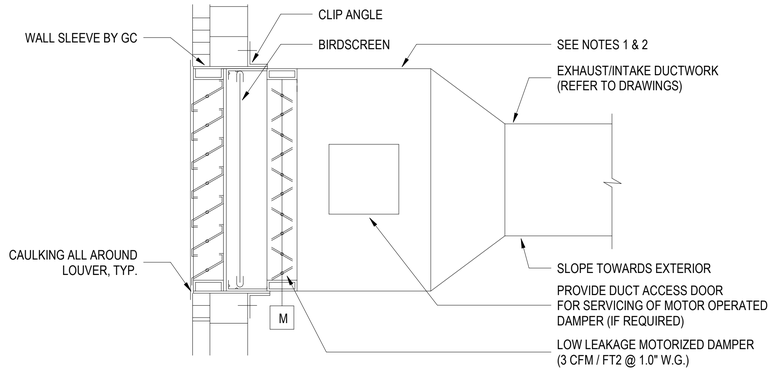

NOTES:
1. FOR UNDUCTED APPLICATIONS PROVIDE SUFFICIENT DUCTWORK TO HOUSE MOTORIZED DAMPER.
2. FOR APPLICATIONS WITHOUT MOTORIZED DAMPER CONNECT DUCT DIRECTLY TO LOUVER.

1 LOUVER W/ MOTORIZED DAMPER DUCTED
SCALE:NTS

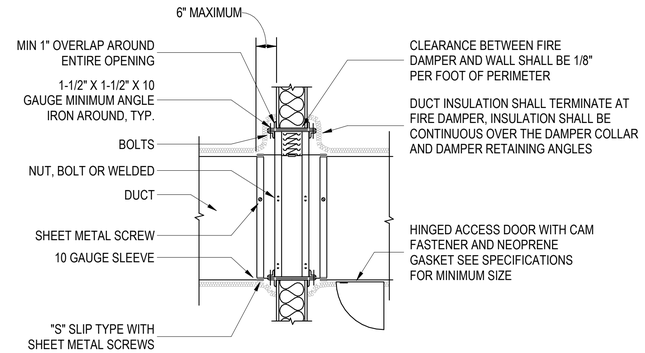

NOTES:
1. PROVIDE FIRE DAMPER FOR ROUND DUCT OR USE TRANSITION FOR ROUND TO SQUARE DUCT.

2 FIRE DAMPER
SCALE: 12" = 1'-0"

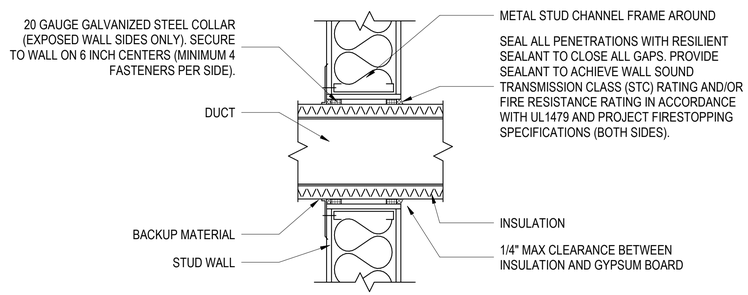

NOTES:
1. THIS DETAIL IS NOT APPLICABLE TO FIRE OR SMOKE RATED WALLS, REFER TO LIFE SAFETY DRAWINGS FOR LOCATION OF ALL FIRE/SMOKE RATED WALLS.
2. WALL PENETRATIONS REQUIRING FIRE, SMOKE, OR COMIBINATION FIRE/SMOKE DAMPERS ARE INDICATED ON THE DRAWINGS AND ARE NOT COVERED BY THIS DETAIL.
3. WALL PENETRATIONS OF RATED WALLS NOT INDICATED AS REQUIRING DAMPERS ON THE PLANS SHALL BE PROVIDED WITH FIRESTOPPING IN ACCORDANCE WITH SPECIFICATION SECTION 07 84 00 FIRESTOPPING.
4. STEEL COLLAR IS REQUIRED ONLY IN LOCATIONS WHERE THE WALL IS VISIBLE FROM THE SPACE, NOT REQUIRED WHERE PENETRATING WALLS ABOVE FINISHED CEILINGS.
5. PROVIDE HANGERS TO SUPPORT DUCT. DO NOT CARRY DUCT WEIGHT ON WALL.

3 DUCT PENETRATION THRU STUD WALL
SCALE:NTS

Michael Baker INTERNATIONAL
12740 GRAN BAY PKWY W
SUITE 2110
JACKSONVILLE, FL 32258

Consultant

THE OFFICIAL RECORD OF THIS SHEET IS THE ELECTRONIC FILE DIGITALLY SIGNED AND SEALED UNDER RULE 61G15-23.004, F.A.C.

SEAL

NO.	DATE	DESCRIPTION

REVISIONS

FDOT

FDOT D3 OPERATIONS CENTER
CHIPLEY, FL 32428

MECHANICAL - DETAILS

Project Number: 4483951-52-01
Date: 07-10-2026
Scale: AS NOTED
Sheet # M-504

PHASE IV - FINAL DESIGN SUBMITTAL 7/7/2026 11:58:51 AM

© Baker 2018

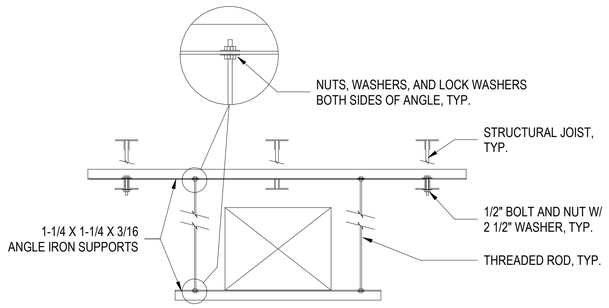

NOTES:
1. ALL DUCT SUPPORTS PER SMACNA.

1 JOIST DUCT HANGER
SCALE:NTS

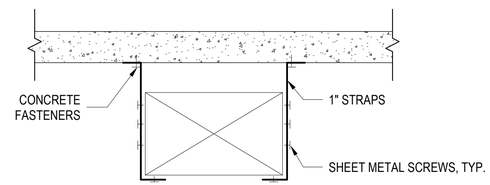

NOTES:
1. FOR MEDIUM PRESSURE DUCTWORK SUPPORT STRAPS MAY BE BOLTED THROUGH AT REINFORCING ANGLE BOLT.

2 DUCT HANGER - STRAP
SCALE:NTS

NOTES:
1. ATTACH ALL HANGERS FROM TOP CHORD OF JOISTS.

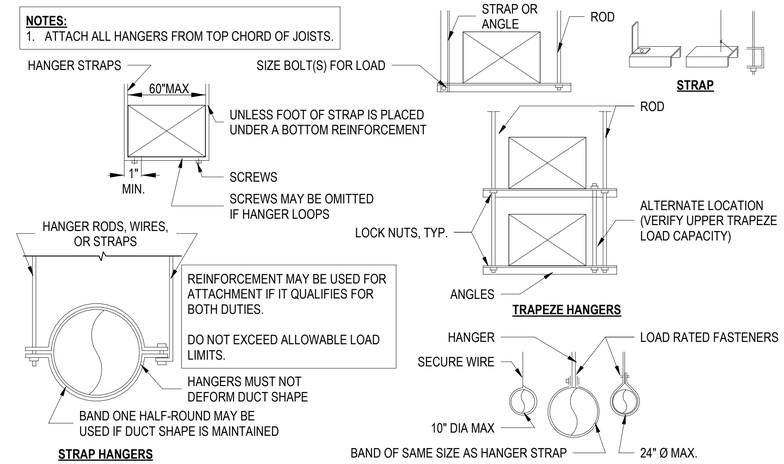

3 DUCT AND PIPE HANGERS
SCALE:NTS

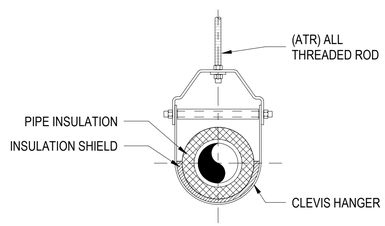

NOTES:
1. REFER TO SPECIFICATIONS FOR HANGER ROD SIZES AND SPACING. THE SPACING SHOWN IN SPECIFICATION IS MAXIMUM SPACING PIPE WILL SPAN. THE HANGER SUPPORTS AND STRUCTURAL ELEMENTS OF THE BUILDING SHOULD BE CHECKED FOR LOAD SUPPORT. SPACING MAY HAVE TO BE REDUCED TO LIGHTEN LOAD ON CERTAIN HANGER SUPPORTS. DERATE EXP. SHIELDS BY 50%.

4 INDIVIDUAL PIPE SUPPORT
SCALE:NTS

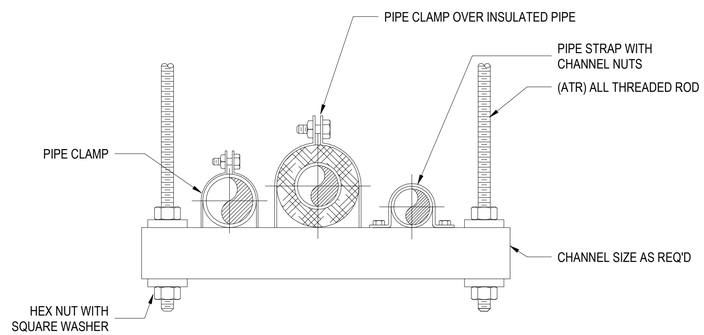

5 TRAPEZE PIPE SUPPORT
SCALE:NTS

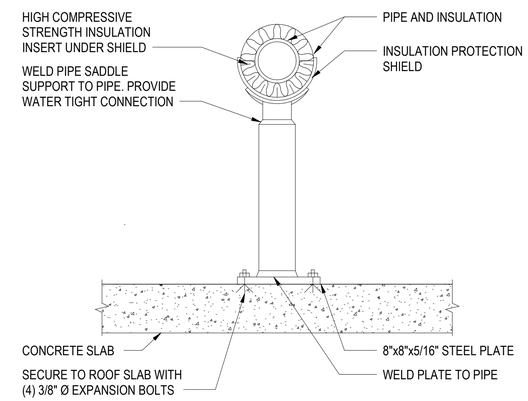

6 EXTERIOR PIPE SUPPORT
SCALE:NTS

Michael Baker
INTERNATIONAL
12740 GRAN BAY PKWY W
SUITE 2110
JACKSONVILLE, FL 32258

Consultant

THE OFFICIAL RECORD OF THIS SHEET IS THE ELECTRONIC FILE DIGITALLY SIGNED AND SEALED UNDER RULE 61G15-23.004, F.A.C.

SEAL

NO.	DATE	DESCRIPTION

REVISIONS

FDOT

FDOT D3 OPERATIONS CENTER
CHIPLEY, FL 32428

MECHANICAL - DETAILS

Project Number: 4483951-52-01
Date: 07-10-2026
Scale: AS NOTED
Sheet # M-505

PHASE IV - FINAL DESIGN SUBMITTAL 7/7/2026 11:58:51 AM

© Baker 2018

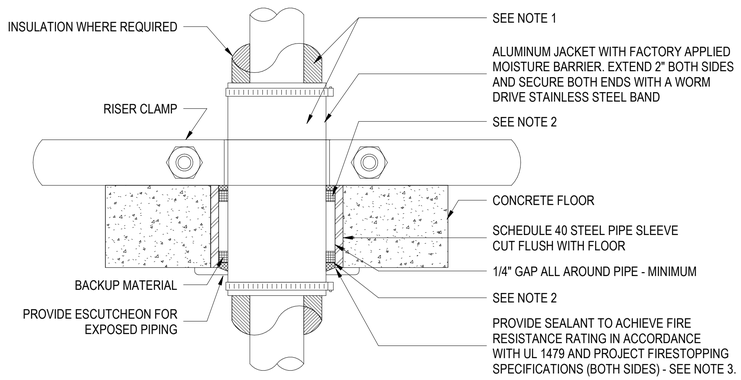

NOTES:
1. OMIT ALUMINUM JACKET IF PIPING IS UNINSULATED.
2. PROVIDE SEALANT TO ACHIEVE FIRE RESISTANCE RATING IN ACCORDANCE WITH UL 1479 AND FIRESTOPPING SPECIFICATION SECTION.
3. SEAL FLOOR IN ACCORDANCE WITH UL THROUGH-FLOOR PENETRATION DIRECTORY.

1 FLOOR PENETRATION
SCALE:NTS

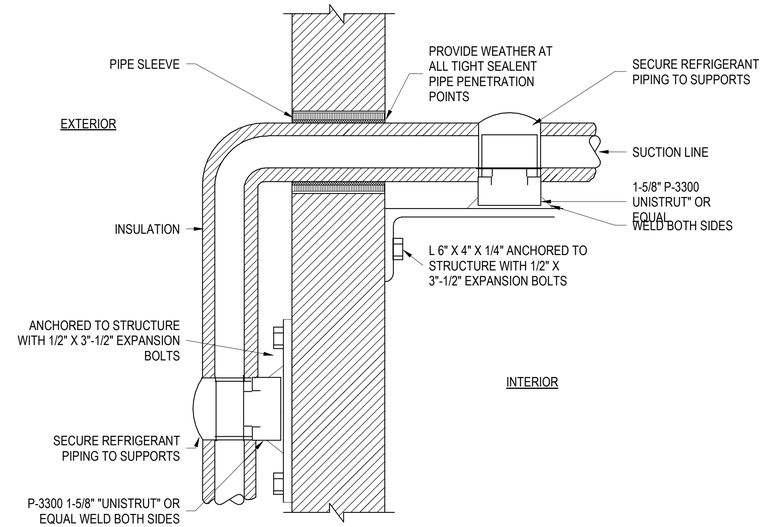

2 REFRIGERANT PIPE SUPPORT AND PENETRATION AT WALL
SCALE:NTS

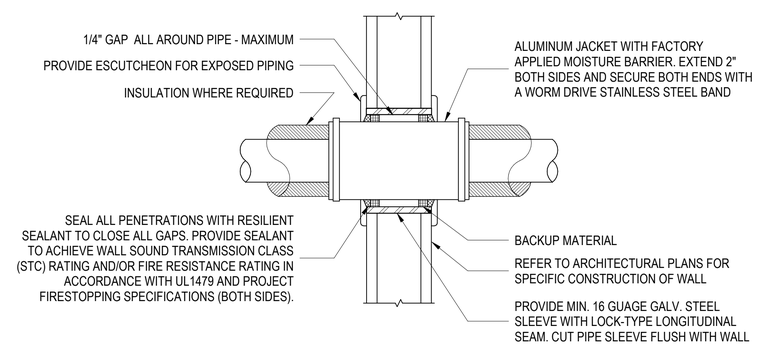

NOTES:
1. PROVIDE HANGERS TO SUPPORT PIPE. DO NOT CARRY PIPE WEIGHT ON WALL.

3 PIPE WALL PENETRATON
SCALE:NTS

Michael Baker
INTERNATIONAL
12740 GRAN BAY PKWY W
SUITE 2110
JACKSONVILLE, FL 32258

Consultant

THE OFFICIAL RECORD OF THIS SHEET IS THE ELECTRONIC FILE DIGITALLY SIGNED AND SEALED UNDER RULE 61G15-23.004, F.A.C.

SEAL

NO.	DATE	DESCRIPTION

REVISIONS

FDOT

FDOT D3 OPERATIONS CENTER
CHIPLEY, FL 32428

MECHANICAL - DETAILS

Project Number: **4483951-52-01**
Date: **07-10-2026**
Scale: **AS NOTED**
Sheet # M-506

PHASE IV - FINAL DESIGN SUBMITTAL **7/7/2026 11:58:51 AM**

© Baker 2018

DEDICATED WSHP TYPE OUTDOOR AIR SYSTEM (DOAS) SCHEDULE

TAG	OA FAN AIR FLOW (CFM) MAX	OA FAN AIR FLOW (CFM) MIN	OA FAN EXT STATIC PRESS (IN WG)	OA FAN MOTOR HP	EXHAUST FAN AIR FLOW (CFM) MAX	EXHAUST FAN AIR FLOW (CFM) MIN	EXHAUST FAN EXT STATIC PRESS (IN WG)	EXHAUST FAN MOTOR HP	COMPRESSOR QUANTITY	COMPRESSOR TYPE	REFRIGERANT TYPE	ENERGY WHEEL PERFORMANCE COOLING / SUMMER CONDITIONS (TOP ROW) WINTER / HEATING CONDITIONS (BOTTOM ROW) OA (°F) DB	OA (°F) WB	RA (°F) DB	RA (°F) WB	SA (°F) DB	SA (°F) WB	WHEEL CAPACITY SPACE LOAD REDUCTION (MBH)	WHEEL CAPACITY EFFECTIVENESS % TOTAL / SENS	ELECTRICAL DATA VOLTS / PHASE / HERTZ	MCA	MOP	INTEGRAL WSHP DATA CONDENSER WATER FLOW (GPM)	PRESSURE DROP (FT)	EWT (COOLING TOP / HTG BOTTOM)	LWT (COOLING TOP / HTG BOTTOM)	COOLING AND HOT GAS REHEAT COIL PERFORMANCE COOLING EAT (°F) DB	EAT (°F) WB	LAT (°F) DB	LAT (°F) WB	TOT/SENS CAP (MBH)	HGRH LAT DB (°F)	HGRH CAPACITY (MBH)	HEATING COIL PERFORMANCE HEATING EAT DB (°F)	HEATING LAT DB (°F)	HEATING CAPACITY (MBH)	ELECTRICAL DATA (EACH HEAT PUMP MODULE) VOLTS / PHASE / HERTZ	MCA	MOP	DIMENSIONS L x W x H (IN)	WEIGHT (LBS)	BASIS OF DESIGN MANUF	MODEL	NOTES
DOAS-01	4395	2115	1.75	14.4	4070	2035	1	14.4	2	SCROLL	R-454B	96.3	76.1	80.0	67.0	83.2	69.1	117	82 / 85	460 / 3 / 60	9.9	15	45	4	90	98.2	83.2	69.1	55.0	53.7	221 / 134	72.0	80.7	61.3	72.0	50.7	460 / 3 / 60	28.9	45	110 x 93 x 78	3369	WATER FURNACE	DAS240L2 / ERW6810	1 - 8
												28.2	26.2	70.0	57.0	61.3	51.4	228	83 / 85						60	52.6																		

NOTES:

1. PROVIDE WITH LOCAL DISCONNECT SWITCH FOR FIELD MOUNTING AND INSTALLATION. PROVIDE WITH MOTOR STARTER AND OVERCURRENT PROTECTION.
2. PROVIDE FACTORY-INSTALLED VARIABLE FREQUENCY DRIVE
3. PROVIDE WITH MERV 8 + MERV 13 FILTERS
4. FINAL EQUIPMENT SELECTION MUST INCLUDE A DIRTY FILTER ALLOWANC OF 0.5 INCHES H2O IN THE EQUIPMENT TOTAL STATIC PRESSURE.
5. PROVIDE WITH BACnet COMPATIBLE DDC INTERFACE.
6. PROVIDE WITH MANUFACTUER'S ELECTROFIN COIL COATING FOR CORROSION RESISTANCE DUE TO COASTAL ENVIRONMENT.
7. DOAS MUST BE CAPABLE OF ACHEIVEING UNIT DESIGN CRITERA AT BOTH HIGH AMBIENT (96.3 / 76.1 °F DB / WB) AND HIGH HUMIDITY OUTDOOR AIR CONDITIONS (83.1 / 79.5 °F DB / WB).
8. MISSION CRITICAL UNIT TO BE PRIORITIZED DURING EMERGENCY OPERATION MODE.

7/6/2026 9:48

COMPUTER ROOM AIR CONDITIONER (CRAC) SCHEDULE

TAG	SPACE SERVED	UNIT TYPE	ECM FAN DATA AIR FLOW (CFM)	ESP (IN WG)	FAN (HP) (EACH)	FAN QTY	COOLING CAPACITY TOTAL / SENSIBLE (MBH)	EWT /LWT (°F)	GPM	PD (FT)	EAT DB/WB (°F)	LAT DB (°F)	HEAT REJECTION	HEATING CAPACITY CAPACITY (MBH)	EWT/ LWT (°F)	HUMIDIFIER CAPACITY (LB/H)	ELECTRICAL VOLT/ PHASE/ HERTZ	MCA	FLA	MOP	BASIS OF DESIGN MANUF	MODEL	NOTES
CRAC-101A/B	262 - FDOT SERVER	UPFLOW	11000	1	3.1	2	263 / 222	90 / 97	78.9	35.0	80 / 67	75.0	353	85.3	60.0	22.0	460 / 3 / 60	74.8	61.4	80	LIEBERT	DS	1 - 5

NOTES:

1. PROVIDE WITH INTEGRAL HUMIDIFIER.
2. UNITS PROVIDED AS PRIMARY/REDUNDANT UNITS
3. BASIS OF DESIGN UNIT INCLUDES INTEGRAL CONDENSATE TRAP, CONTRACTOR MUST COORDINATE TRAP REQUIREMENTS WITH EQUIPMENT PURCHASED.
4. MISSION CRITICAL UNIT TO BE PRIORITIZED DURING EMERGENCY OPERATION MODE.
5. PROVIDE WITH MANUFACTURER'S AUTO CHANGEOVER CONTROL PANEL IF CHANGOVER CANNOT BE CONTROLLED VIA BAS.

7/6/2026 9:48

APPROVED EQUIVALENT TO BASIS OF DESIGN IS ACCEPTABLE. THE ELECTRICAL INFORMATION PRESENTED IN THESE SCHEDULES IS BASED ON MECHANICAL EQUIPMENT CATALOG DATA AND/OR SELECTIONS MADE DURING DESIGN. THE CONTRACTOR IS RESPONSIBLE FOR VERIFYING THE ELECTRICAL REQUIREMENTS OF THE ACTUAL MECHANICAL EQUIPMENT PROVIDED. THE CONTRACTOR WILL IDENTIFY ANY AND ALL DIFFERENCES AND IS RESPONSIBLE FOR PROVIDING WIRING, DEVICES, AND EQUIPMENT NEEDED DUE TO THESE DIFFERENCES AT THEIR EXPENSE. THE CONTRACTOR IS RESPONSIBLE FOR COORDINATING MECHANICAL EQUIPMENT ELECTRICAL REQUIREMENTS WITH THE ELECTRICAL TRADE.

Michael Baker INTERNATIONAL
12740 GRAN BAY PKWY W
SUITE 2110
JACKSONVILLE, FL 32258

Consultant

THE OFFICIAL RECORD OF THIS SHEET IS THE ELECTRONIC FILE DIGITALLY SIGNED AND SEALED UNDER RULE 61G15-23.004, F.A.C.

SEAL

REVISIONS

NO.	DATE	DESCRIPTION

FDOT

FDOT D3 OPERATIONS CENTER
CHIPLEY, FL 32428

MECHANICAL - SCHEDULES

Project Number: 4483951-52-01
Date: 07-10-2026
Scale: AS NOTED
Sheet # M-601

PHASE IV - FINAL DESIGN SUBMITTAL 7/7/2026 11:58:52 AM

© Baker 2018

LOUVER (L) SCHEDULE

TAG	SERVING	SERVICE	DIMENSIONS WIDTH (IN)	DIMENSIONS HEIGHT (IN)	DESIGN CFM	REQ'D FREE AREA (SQFT)	MIN FREE AREA (%)	FREE AREA VELOCITY (FPM)	MAX. PRESSURE DROP (IN WG)	BASIS OF DESIGN MANUF	BASIS OF DESIGN MODEL	NOTES
L-01	DOAS-01	INTAKE	60	48	5000	9.09	50	550	0.1	RUSKIN	HZ700MD	1 - 5
L-02	DOAS-01	EXHAUST	60	48	4500	8.18	50	550	0.1	RUSKIN	HZ700MD	1 - 5

NOTES:

1. PROVIDE COLOR TO MATCH EXTERIOR WALL FINISH. PROVIDE MANUFACTURER'S ORIGINAL COLOR CHART; SELECTION BY ARCHITECT. EXACT SIZES TO BE CONFIRMED BY CONTRACTOR.
2. PROVIDE COLOR TO MATCH EXTERIOR WALL FINISH. PROVIDE MANUFACTURER'S ORIGINAL COLOR CHART; SELECTION BY ARCHITECT. EXACT SIZES TO BE CONFIRMED BY CONTRACTOR.
3. LOUVER MUST BE ACMA LISTED TO MEET AMCA 540 (IMPACTED BY WIND BORNE DEBRIS), ACMA 550 (HIGH VELOCITY WIND DRIVEN RAIN RESISTANT), FLORIDA TAS PROTOCOLS (E.G., TAS 201 FOR IMPACT) AND MIAMI-DADE NOA (NOTICE OF ACCEPTANCE).
4. PROVIDE WITH LOW LEAKAGE MOTORIZED DAMPER(S) (3 CFM/SQFT AGAINST 1" DIFFERENTIAL PRESSURE). SEE DRAWINGS FOR LOCATION OF MOTORIZED DAMPERS.
5. PROVIDE CORROSION RESISTANT COATINGS AND MATERIALS; PROVIDE WITH ALUMINUM BIRDSCREEN.

7/6/2026 9:48

DIFFUSER, REGISTER AND GRILLE SCHEDULE

TAG	SERVICE	MAX CFM	TYPE	DIMENSIONS (INCHES) FACE	DIMENSIONS (INCHES) NECK	LINEAR SLOTS LENGTH	LINEAR SLOTS WIDTH	SLOT QTY	MAX PD (IN WG)	MAX NC	BASIS OF DESIGN MANUF	BASIS OF DESIGN MODEL	NOTES
A	SUPPLY	40	LINEAR DIFFUSER	24 x 2	6 Ø	24	1/2	1	0.1	20	GREENHECK	LSD	1 - 6
B	OUTDOOR												
C	RETURN	40	LINEAR DIFFUSER	24 x 2	6 Ø	24	1/2	1	0.1	20	GREENHECK	LSD	1 - 5
D	EXHAUST / TRANSFER												
E	SUPPLY	210	LINEAR DIFFUSER	24 x 6	8 Ø	24	1	3	0.1	20	GREENHECK	LSD	1 - 6
F	OUTDOOR												
G	RETURN	210	LINEAR DIFFUSER	24 x 6	8 Ø	24	1	3	0.1	20	GREENHECK	LSD	1 - 5
H	EXHAUST / TRANSFER												
J	SUPPLY / OUTDOOR	360	CEILING DIFFUSER	24 x 24	10 Ø	-	-	-	0.1	20	GREENHECK	CPD	
K	RETURN / EXHAUST / TRANSFER	2000	CEILING GRILLE	24 x 24	22 x 22	-	-	-	0.1	20	GREENHECK	RGCC	
L	SUPPLY / OUTDOOR	140	REGISTER	8 x 8	6 x 6	-	-	-	0.1	20	GREENHECK	SG42	
M	RETURN / EXHAUST / TRANSFER	150	GRILLE	8 x 8	6 x 6	-	-	-	0.1	20	GREENHECK	RG	
N	SUPPLY / OUTDOOR	1100	REGISTER	24 x 24	22 x 22	-	-	-	0.05	30	GREENHECK	SGCB	
X	THIS TAG "X" USED TO DESIGNATE BALANCED CFM OF OPEN ENDED DUCT TERMINATIONS.												8

NOTES:

1. REFER TO DRAWINGS FOR ACTUAL AIR BALANCE QUANTITIES IN SPECIFIC LOCATIONS.
2. CONTRACTOR TO VERIFY CEILING/WALL TYPE AND PROVIDE PROPER FRAME AND BORDER TYPE FOR MOUNTING CONFIGURATION. FACE DIMENSIONS MAY VARY WITH MOUNTING CONFIGURATION.
3. ALL DIFFUSERS, REGISTERS, GRILLES, AND ACCESSORIES ARE TO BE OF ALUMINUM CONSTRUCTION AND PROVIDED WITH MANUFACTURER'S STANDARD ENAMEL PAINT FINISH. REFER TO ARCHITECTURAL/INTERIOR DRAWINGS AND SPECIFICATION DIVISION 09 FINISHES FOR ADDITIONAL FINISH INFORMATION. FINAL COLOR/FINISH TO BE SELECTED BY ARCHITECT/INTERIOR DESIGNER FROM MANUFACTURER'S ORIGINAL COLOR SAMPLE.
4. NC LEVELS ARE BASED ON DIFFUSER BLADES SET FOR HORIZONTAL AIRFLOW.
5. PROVIDE DIFFUSER WITH MANUFACTURER'S INTEGRAL CABLE-OPERATED MANUAL VOLUME DAMPER ACCESSIBLE THROUGH DIFFUSER FACE.
6. PROVIDE WITH MANUFACTURER'S INSULATED PLENUM BOX.
7. PROVIDE WITH MANUFACTURER'S OPPOSED BLADE DAMPER.
8. PROVIDE 1/2" HARDWARE CLOTH IN REMOVEABLE "U" FRAME OVER BELMOUTH AT OPEN END OF DUCT.

7/6/2026 9:48

SPLIT DX HEAT PUMP/AIR CONDITIONING UNIT (SSHP & HPCU) SCHEDULE

TAG	SPACE SERVED	ARI COOLING CAPACITY TOTAL (MBH)	ARI COOLING CAPACITY MIN. (MBH)	HEATING CAPACITY @ AHRI 47° OUTDOOR	HEATING CAPACITY @ 17° OUTDOOR	ARI MATCHED PAIR EFFICIENCY EER2	ARI MATCHED PAIR EFFICIENCY SEER2	ARI MATCHED PAIR EFFICIENCY HSPF2	INDOOR UNIT FAN AIRFLOW MIN-MAX (CFM)	INDOOR UNIT TYPE	INDOOR UNIT ELECTRICAL VOLTS/ PHASE/ HERTZ	INDOOR UNIT ELECTRICAL MCA (AMPS)	INDOOR UNIT ELECTRICAL MOCP (AMPS)	INDOOR UNIT SIZE LENGTH X HEIGHT X DEPTH (INCHES)	INDOOR UNIT WEIGHT (LBS)	OUTDOOR UNIT TAG	OUTDOOR UNIT ELECTRICAL VOLTS/ PHASE/ HERTZ	OUTDOOR UNIT ELECTRICAL MCA (AMPS)	OUTDOOR UNIT ELECTRICAL MOCP (AMPS)	OUTDOOR UNIT SIZE LENGTH X WIDTH X HEIGHT (INCHES)	OUTDOOR UNIT WEIGHT (LBS)	BASIS OF DESIGN MANUF	BASIS OF DESIGN UNIT SERIES INDOOR	BASIS OF DESIGN UNIT SERIES OUTDOOR	NOTES
SSHP-101	149 EM ELEC	6000	5280	24000	16600	13	20	10	150-420	WALL MOUNT	POWERED BY OUTDOOR UNIT			40x 10 x 12	32	HPCU-01	208 / 1 / 60	21.7	38	34 X 13 X 28	119	MITSUBISHI	MSZ-FX06NL	MXZ-2D20NL	1 - 11
SSHP-102	125 ELEV MECH	6000	5280						150-420	WALL MOUNT				40x 10 x 12	32								MSZ-FX06NL		1 - 11
SSHP-201	260 TELECOM	33400	23046	64500	72500	10.7	18.2	10	765-910	WALL MOUNT	208 / 1 / 60	5	15	21 X 22 X 44	122	HPCU-02	208 / 1 / 60	25	31	42 X 13 X 53	283	MITSUBISHI	SVZ-AP36NL	MXZ-SM60NLHZ	1 - 13
SSHP-301	343 TELECOM	12000	10560						165-525	MULTI-POSITION	208 / 1 / 60	1	15	40x 10 x 12	32								MSZ-FX12NL		1 - 13

NOTES:

1. INDOOR UNIT POWERED BY THE OUTDOOR UNIT. POWER AND CONTROL WIRING BETWEEN INDOOR AND OUTDOOR UNITS TO BE PROVIDED
2. UNIT SIZE AND WEIGTHS ARE APPROXIMATE BASED ON BASIS OF DESIGN EQUIPMENT.
3. COOLING RATED CAPACITIES ARE BASED ON 80°F DB/67°F WB INDOOR TEMPERATURES AND 95°F DB/75°F WB OUTDOOR TEMPERATURES.
4. HEATING RATED CAPACITIES ARE BASED ON 70°F DB/60°F WB INDOOR TEMPERATURES, 47oF DB/43oF WB OUTDOOR TEMPERATURES.
5. PROVIDE WITH MANUFACTURER'S STANDARD WASHABLE AIR FILTER/FILTRATION SYSTEM.
6. PROVIDE COMPONENTS WITH INTERCONNECTING REFRIGERANT PIPING FOR FIELD INSTALLATION. FULLY CHARGE WITH REFRIGRANT. INSULATE PER SPECIFICATIONS.
7. PROVIDE INDOOR UNIT WITH CONDENSATE PUMP (POWERED BY INDOOR UNIT); EXTEND DRAIN LINE TO NEAREST FLOOR DRAIN OR SAFEWASTE DISPOSAL LOCATION.
8. PROVIDE 4" CONCRETE PAD (AT GRADE) OR EQUIPMENT RAILS (ON ROOF) FOR OUTDOOR CONDENSING UNIT. EXTERIOR REFRIGERANT PIPE INSULATION SHALL BE WRAPPED WITH ALUMINUM JACKET.
9. PROVIDE CONDENSER COIL WITH MANUFACTURERS SEACOAST AND ANTI-CORROSION PROTECTION (SHALL PASS 3,000 HOUR SALT SPRAY TEST PER ASTM B117).
10. PROVIDE UNIT/SYSTEM WITH REFRIGERANT LEAK SENSORS AND SAFETY SHUTOFF VALVES.
11. PROVIDE WITH MANUFACTURER'S CONTROLLER PANEL MOUNTED WITHIN SPACE SERVED. CONTROLLER MUST BE CAPABLE OF CONTROLLING UNITS IN RESPONSE TO REFRIGERANT LEAK SENSORS.
12. UNIT SERVED VIA BRANCH BOX BC-01. PROVIDE SEPARATE POWER CONNECTION TO BRANCH BOX AT 208 / 1 / 60
13. MISSION CRITICAL UNIT TO BE PRIORITIZED DURING EMERGENCY OPERATION MODE.

7/6/2026 9:48

APPROVED EQUIVALENT TO BASIS OF DESIGN IS ACCEPTABLE. THE ELECTRICAL INFORMATION PRESENTED IN THESE SCHEDULES IS BASED ON MECHANICAL EQUIPMENT CATALOG DATA AND/OR SELECTIONS MADE DURING DESIGN. THE CONTRACTOR IS RESPONSIBLE FOR VERIFYING THE ELECTRICAL REQUIREMENTS OF THE ACTUAL MECHANICAL EQUIPMENT PROVIDED. THE CONTRACTOR WILL IDENTIFY ANY AND ALL DIFFERENCES AND IS RESPONSIBLE FOR PROVIDING WIRING, DEVICES, AND EQUIPMENT NEEDED DUE TO THESE DIFFERENCES AT THEIR EXPENSE. THE CONTRACTOR IS RESPONSIBLE FOR COORDINATING MECHANICAL EQUIPMENT ELECTRICAL REQUIREMENTS WITH THE ELECTRICAL TRADE.

Michael Baker INTERNATIONAL
12740 GRAN BAY PKWY W
SUITE 2110
JACKSONVILLE, FL 32258

Consultant

THE OFFICIAL RECORD OF THIS SHEET IS THE ELECTRONIC FILE DIGITALLY SIGNED AND SEALED UNDER RULE 61G15-23.004, F.A.C.

SEAL

NO.	DATE	DESCRIPTION

REVISIONS

FDOT

FDOT D3 OPERATIONS CENTER
CHIPLEY, FL 32428

MECHANICAL - SCHEDULES

Project Number: 4483951-52-01
Date: 07-10-2026
Scale: AS NOTED
Sheet # M-602

PHASE IV - FINAL DESIGN SUBMITTAL 7/7/2026 11:58:52 AM

© Baker 2018

WATER SOURCE HEAT PUMP (WSHP) UNIT SCHEDULE

TAG	SPACE SERVED	UNIT SIZE	SUPPLY AIR FLOW (CFM)	CONDENSER WATER (GPM)	COOLING CAPACITY BASED ON EWT=90°F; EAT=80/67°F					HEAT PUMP CAPACITY BASED ON EWT=60°F; EAT=68°F				ELECTRICAL					BASIS OF DESIGN		NOTES
					TOTAL (MBH)	SENSIBLE (MBH)	HEAT OF REJECTION (MBH)	LWT (°F)	EER	TOTAL (MBH)	HEAT OF EXTRACTION (MBH)	LWT (°F)	COP	VOLTS/ PHASE/ HERTZ	TOTAL UNIT FLA (AMPS)	MIN CIRCUIT AMPS	MOCP	COMPRESSOR QTY / RLA / LRA	MANUF	MODEL	
WSHP-101	130 - OFFICE; 132 - OFFICE; 134 - OFFICE; 135 - DEPT HEAD	024	1000	6.0	24.9	18.8	31.1	100.4	13.4	29.4	23.4	52.2	4.6	208 / 1 / 60	15.3	18.2	25	1 / 11.4 / 64.4	CLIMATE MASTER	SC	1 - 5
WSHP-102	136 - DEPUTY; 138 - OFFICE; 140 - OFFICE	012	415	3.0	11.0	7.3	14.1	99.4	12.0	14.7	11.4	52.4	4.3	208 / 1 / 60	7.5	8.7	15	1 / 5.1 / 32.5	CLIMATE MASTER	SC	1 - 5
WSHP-103	143 - STORAGE/LARGE PRINTER AREA	006	220	1.0	5.4	4.2	7.0	104.0	11.2	7.2	5.5	48.9	4.3	208 / 1 / 60	5.7	6.6	15	1 / 3.3 / 17.7	CLIMATE MASTER	SC	1 - 5
WSHP-104	124 - STOR; 131; 133; 137; 139; 141; 144; 145 - OFFICE(S)	015	545	2..8	14.4	10.5	18.1	102.9	13.3	16.2	12.7	50.9	4.5	208 / 1 / 60	7.9	9.2	15	1 / 5.2 / 26.0	CLIMATE MASTER	SC	1 - 5
WSHP-105	128; 129 - OFFICE(S)	012	400	1.5	10.3	7.0	13.7	108.3	10.4	13.4	10.2	46.4	4.0	208 / 1 / 60	7.5	8.7	15	1 / 5.1 / 32.5	CLIMATE MASTER	SC	1 - 5
WSHP-106	105 - CONF RM	012	400	3.0	11.0	7.3	14.1	99.4	12.0	14.5	11.2	52.5	4.3	208 / 1 / 60	7.5	8.7	15	1 / 5.1 / 32.5	CLIMATE MASTER	SC	1 - 5
WSHP-107A	103 - MF CONF HALL; 104 - CHAIR STORAGE	030	1100	7.5	28.6	22.4	36.1	99.6	13.2	33.0	26.0	53.1	4.4	208 / 1 / 60	16.6	19.8	30	1 / 12.7 / 75.6	CLIMATE MASTER	SC	1 - 5
WSHP-107B	103 - MF CONF HALL	030	1000	5.6	27.7	21.2	35.3	102.6	12.4	32.0	24.9	51.1	4.3	208 / 1 / 60	16.6	19.8	30	1 / 12.7 / 75.6	CLIMATE MASTER	SC	1 - 5
WSHP-108	101 - VEST; 102 - CIRC; 110 - LACT	006	265	2.0	5.9	4.7	7.4	97.4	13.0	7.9	6.3	53.7	4.6	208 / 1 / 60	5.7	6.6	15	1 / 3.3 / 17.7	CLIMATE MASTER	SC	1 - 5
WSHP-109A	114 - EOC OPEN OFFICE AREA	018	725	4.5	19.2	14.7	23.9	100.6	13.4	21.0	16.6	52.6	4.5	208 / 1 / 60	11.9	14.2	20	1 / 9.2 / 35.0	CLIMATE MASTER	SC	1 - 6
WSHP-109B	114 - EOC OPEN OFFICE AREA	018	725	4.5	19.2	14.7	23.9	100.6	13.4	21.0	16.6	52.6	4.5	208 / 1 / 60	11.9	14.2	20	1 / 9.2 / 35.0	CLIMATE MASTER	SC	1 - 6
WSHP-110	111 - CIRC; 115 - EOC CONF	009	375	2.5	8.5	6.8	10.8	98.6	12.4	11.4	9.0	52.8	4.4	208 / 1 / 60	6.9	8	15	1 / 4.5 / 22.2	CLIMATE MASTER	SC	1 - 6
WSHP-111	116 - EOC KITCHEN; 117 - EOC STOR. OVERNIGHT	015	530	2.8	14.4	10.5	18.1	102.9	13.3	16.1	12.6	51.0	4.5	208 / 1 / 60	7.9	9.2	15	1 / 5.2 / 26.0	CLIMATE MASTER	SC	1 - 6
WSHP-112	118; 119 - OFFICE(S)	012	400	1.5	10.3	7.0	13.7	108.3	10.4	13.4	10.2	46.4	4.0	208 / 1 / 60	7.5	8.7	15	1 / 5.1 / 32.5	CLIMATE MASTER	SC	1 - 5
WSHP-113	120 - BREAK ROOM	012	360	1.5	10.1	6.7	13.5	108.0	10.4	13.2	10.0	46.6	4.0	208 / 1 / 60	7.5	8.7	15	1 / 5.1 / 32.5	CLIMATE MASTER	SC	1 - 5
WSHP-114	147 - MECH / FIRE RISER	009	375	1.1	7.8	6.3	10.3	108.7	10.9	10.4	8.2	45.1	4.4	208 / 1 / 60	6.3	7.3	15	1 / 4.0 / 22.0	CLIMATE MASTER	SD	1 - 5
WSHP-115	148 - ELEC	030	1100	7.5	28.6	22.4	36.1	99.6	13.2	33.0	26.0	53.1	4.4	208 / 1 / 60	16.6	19.8	30	1 / 12.7 / 75.6	CLIMATE MASTER	SC	1 - 6
WSHP-116	401 - EAST STAIR	018	600	5.0	15.8	13.3	20.8	98.3	12.1	20.5	15.6	53.8	4.2	208 / 1 / 60	11.5	13.8	20	1 / 9.2 / 35.0	CLIMATE MASTER	SD	1 - 5
WSHP-117	400 - WEST STAIR	018	750	4.5	15.8	13.9	23.5	99.4	12.1	21.0	16.6	53.3	4.2	208 / 1 / 60	11.5	13.8	20	1 / 9.2 / 35.0	CLIMATE MASTER	SD	1 - 5
WSHP-118	126 - ELEC	009	375	2.5	8.5	6.8	10.8	98.6	12.4	11.4	9.0	52.8	4.4	208 / 1 / 60	6.9	8	15	1 / 4.5 / 22.2	CLIMATE MASTER	SC	1 - 6
WSHP-201	252 - DEPUTY; 253; 255; 256 - OFFICE(S)	030	1000	3.8	26.6	20.7	34.8	108.3	11.1	30.8	23.8	47.5	4.2	208 / 1 / 60	16.6	19.8	30	1 / 12.7 / 75.6	CLIMATE MASTER	SC	1 - 5
WSHP-202	246 - DEPUTY; 248 - OFFICE; 250 - DEPUTY	015	570	1.9	13.9	10.5	17.8	108.8	12.0	15.5	12.2	47.1	4.3	208 / 1 / 60	7.9	9.2	15	1 / 5.2 / 26.0	CLIMATE MASTER	SC	1 - 5
WSHP-203	240 - DEPUTY; 242 - OFFICE; 244 - DEPUTY	015	555	1.9	13.9	10.5	17.8	108.8	12.0	15.5	12.1	47.2	4.3	208 / 1 / 60	7.9	9.2	15	1 / 5.2 / 26.0	CLIMATE MASTER	SC	1 - 5
WSHP-204	234; 236; 238 - OFFICE(S); 239 - DEPT HEAD	018	750	3.4	18.7	14.5	23.7	103.9	12.7	20.5	16.2	50.5	4.4	208 / 1 / 60	11.9	14.2	20	1 / 9.2 / 35.0	CLIMATE MASTER	SC	1 - 5
WSHP-205A	265 - CIRC	018	700	5.4	19.1	14.6	23.8	100.6	13.4	20.9	16.6	52.6	4.5	208 / 1 / 60	11.9	14.2	20	1 / 9.2 / 35.0	CLIMATE MASTER	SC	1 - 5
WSHP-205B	260 - TELE	036	1150	3.0	30.6	24.5	41.0	117.3	9.9	36.7	27.9	41.4	4.0	208 / 1 / 60	20.4	24.0	35	1 / 14.1 / 86.0	CLIMATE MASTER	SC	1 - 6
WSHP-206	245; 247; 249; 251; 254 - OFFICE(S); 257 STOR	006	400	1.0	8.6	7.0	10.9	111.7	11.2	7.4	5.8	48.4	4.3	208 / 1 / 60	5.7	6.6	15	1 / 3.3 / 17.7	CLIMATE MASTER	SC	1 - 5
WSHP-207	243 - PRINT/SUPPLY; 259 - STORAGE; 261 - BREAK RM	009	310	1.3	7.6	5.8	10.1	105.5	10.7	10.3	7.9	47.9	4.1	208 / 1 / 60	6.9	8	15	1 / 4.5 / 22.2	CLIMATE MASTER	SC	1 - 5
WSHP-208	233; 235; 237 - OFFICE(S)	006	225	1.0	5.4	4.2	7.0	104.0	11.2	7.2	5.5	48.9	4.3	208 / 1 / 60	5.7	6.6	15	1 / 3.3 / 17.7	CLIMATE MASTER	SC	1 - 5
WSHP-209	202; 204 - OFFICE(S); 206 -DEPUTY; 208 - DEPT HEAD	030	970	3.8	26.4	20.2	34.6	108.2	11.1	30.6	23.6	47.6	4.2	208 / 1 / 60	16.6	19.8	30	1 / 12.7 / 75.6	CLIMATE MASTER	SC	1 - 5
WSHP-210	201; 203; 205 - OFFICE(S)	006	225	1.0	5.4	4.2	7.0	104.0	11.2	7.2	5.5	48.9	4.3	208 / 1 / 60	5.7	6.6	15	1 / 3.3 / 17.7	CLIMATE MASTER	SC	1 - 5
WSHP-211	258 - CONF	009	325	2.5	8.3	6.3	10.6	98.4	12.4	11.1	8.7	53.0	4.4	208 / 1 / 60	6.9	8	15	1 / 4.5 / 22.2	CLIMATE MASTER	SC	1 - 5
WSHP-212	207; 210; 212; 214 - OFFICE(S)	006	300	2.0	5.9	4.9	7.6	97.6	13.0	8.0	6.4	53.6	4.6	208 / 1 / 60	5.7	6.6	15	1 / 3.3 / 17.7	CLIMATE MASTER	SC	1 - 5
WSHP-213	216; 218 - OFFICE(S); 219 - EFB STORAGE; 223; 230 - OFFICE(S)	006	325	1.0	5.7	4.9	7.3	104.6	11.2	7.4	5.8	48.4	4.3	208 / 1 / 60	5.7	6.6	15	1 / 3.3 / 17.7	CLIMATE MASTER	SC	1 - 5
WSHP-214	228 - DEPUTY; 229 ; 231; 232 - OFFICE(S)	018	750	4.5	19.2	14.7	23.9	100.6	13.4	21.0	16.6	52.6	4.5	208 / 1 / 60	11.9	14.2	20	1 / 9.2 / 35.0	CLIMATE MASTER	SC	1 - 5
WSHP-215	209; 211; 213; 215 - OFFICE(S)	015	600	3.8	15.0	11.3	18.6	99.8	14.1	16.7	13.3	53.0	4.6	208 / 1 / 60	7.9	9.2	15	1 / 5.2 / 26.0	CLIMATE MASTER	SC	1 - 5
WSHP-216	217; 224; 225; 227 - OFFICE(S)	018	670	2.3	17.7	13.7	23.2	110.1	11.3	19.4	15.1	46.9	4.3	208 / 1 / 60	11.9	14.2	20	1 / 9.2 / 35.0	CLIMATE MASTER	SC	1 - 5
WSHP-217	241 - MECH	009	300	1.0	8.6	6.9	10.9	109.8	12.7	10.3	8.1	45.3	4.4	208 / 1 / 60	6.3	7.3	15	1 / 4.0 / 22.0	CLIMATE MASTER	SD	1 - 5
WSHP-218	263 - ELEC	006	275	1.0	5.6	4.6	7.2	104.4	11.2	7.3	5.7	48.6	4.3	208 / 1 / 60	5.7	6.6	15	1 / 3.3 / 17.7	CLIMATE MASTER	SC	1 - 6
				-																	
WSHP-301	336 - DEPT HEAD; 337; 339 - OFFICE(S)	018	725	2.3	17.9	14.2	23.4	110.3	11.3	19.5	15.3	46.7	4.3	208 / 1 / 60	11.9	14.2	20	1 / 9.2 / 35.0	CLIMATE MASTER	SC	1 - 5
WSHP-302	328 - DEPUTY; 327; 331; 333; 335 - OFFICE(S)	018	630	2.3	17.6	13.4	23.0	110.0	11.3	19.3	15.0	47.0	4.3	208 / 1 / 60	11.9	14.2	20	1 / 9.2 / 35.0	CLIMATE MASTER	SC	1 - 5
WSHP-303	322 - OFFICE; 324 - DEPUTY; 326 - DEPT HEAD	015	545	1.9	13.8	10.3	17.7	108.6	12.0	15.4	12.0	47.3	4.3	208 / 1 / 60	7.9	9.2	15	1 / 5.2 / 26.0	CLIMATE MASTER	SC	1 - 5
WSHP-304A	318 - PRINT; 321 - STOR; 347 - CIRC	009	375	2.5	8.5	6.8	10.8	98.6	12.4	11.3	8.9	52.8	4.4	208 / 1 / 60	6.9	8	15	1 / 4.5 / 22.2	CLIMATE MASTER	SC	1 - 5
WSHP-304B	343 - TELE	015	525	1.9	13.8	10.3	17.7	108.6	12.0	15.4	12.0	47.3	4.3	208 / 1 / 60	7.9	9.2	15	1 / 5.2 / 26.0	CLIMATE MASTER	SC	1 - 6
WSHP-305	329; 330; 332; 334 - OFFICE(S)	009	300	1.3	7.6	5.8	10.1	105.5	10.7	10.3	7.9	47.9	4.1	208 / 1 / 60	6.9	8	15	1 / 4.5 / 22.2	CLIMATE MASTER	SC	1 - 5
WSHP-306	323; 341; 342; 344; 345 - OFFICE(S)	009	385	2.5	8.5	6.9	10.8	98.7	12.4	11.4	9.0	52.8	4.4	208 / 1 / 60	6.9	8	15	1 / 4.5 / 22.2	CLIMATE MASTER	SC	1 - 5
WSHP-307	301; 303; 304 - OFFICE(S)	015	525	1.9	13.8	10.3	17.7	108.6	12.0	15.4	12.0	47.3	4.3	208 / 1 / 60	7.9	9.2	15	1 / 5.2 / 26.0	CLIMATE MASTER	SC	1 - 5
WSHP-308	302 - CONF	012	385	3.0	10.9	7.1	14.0	99.3	12.0	14.4	11.1	52.6	4.3	208 / 1 / 60	7.5	8.7	15	1 / 5.1 / 32.5	CLIMATE MASTER	SC	1 - 5
WSHP-309	312 - BREAK ROOM	006	230	2.0	5.7	4.3	7.3	97.3	13.0	7.8	6.1	53.9	4.6	208 / 1 / 60	5.7	6.6	15	1 / 3.3 / 17.7	CLIMATE MASTER	SC	1 - 5
WSHP-310	307; 309; 311 - OFFICE(S)	006	225	2.0	5.7	4.3	7.3	97.3	13.0	7.8	6.1	53.9	4.6	208 / 1 / 60	5.7	6.6	15	1 / 3.3 / 17.7	CLIMATE MASTER	SC	1 - 5
WSHP-311	305 - DEPUTY; 306; 308; 310 - OFFICE (S)	024	825	3.0	23.0	17.0	30.0	110.0	11.2	26.9	2.7	58.2	4.3	208 / 1 / 60	15.3	18.2	25	1 / 11.4 / 64.4	CLIMATE MASTER	SC	1 - 5
WSHP-312	316; 317; 320 - OFFICE(S); 319 - DEPUTY	018	720	2.3	17.9	14.2	23.4	110.3	11.3	19.5	15.3	46.7	4.3	208 / 1 / 60	11.9	14.2	20	1 / 9.2 / 35.0	CLIMATE MASTER	SC	1 - 5
WSHP-313	346 - ELEC	006	275	1.0	5.9	4.8	7.5	105.0	11.2	7.9	6.3	47.4	4.3	208 / 1 / 60	5.7	6.6	15	1 / 3.3 / 17.7	CLIMATE MASTER	SC	1 - 6

NOTES:

1. PROVIDE FULLY CHARGED WITH REFRIGERANT.
2. PROVIDE DDC CONTROL SYSTEM MICROPROCESSOR BASED CONTROLLER
3. PROVIDE WITH FACTORY SUPPLIED/MOUNTED FUSED SERVICE DISCONNECT
4. PROVIDED WITH AUXILARY DRAIN PAN WITH SOLID STATE ELECTRONIC OVERFLOW CONDENSATE PROTECTION AND CONDENSATE OVERFLOW SENSORS/SWITCHES; PROVIDE WITH CONDENSATE PUMP WHERE REQURIED TO MAINTAIN REQUIRED SLOPE.
5. PROVIDE WITH MANUFACTURER'S INTEGRAL AUTOFLOW BALANCE VALVE OR MANUFACTURER'S RECOMMENDED AUTOFLOW BALANCE VALVE.
6. MISSION CRITICAL UNIT TO BE PRIORITIZED DURING EMERGENCY OPERATION MODE.

7/6/2026 9:48

APPROVED EQUIVALENT TO BASIS OF DESIGN IS ACCEPTABLE. THE ELECTRICAL INFORMATION PRESENTED IN THESE SCHEDULES IS BASED ON MECHANICAL EQUIPMENT CATALOG DATA AND/OR SELECTIONS MADE DURING DESIGN. THE CONTRACTOR IS RESPONSIBLE FOR VERIFYING THE ELECTRICAL REQUIREMENTS OF THE ACTUAL MECHANICAL EQUIPMENT PROVIDED. THE CONTRACTOR WILL IDENTIFY ANY AND ALL DIFFERENCES AND IS RESPONSIBLE FOR PROVIDING WIRING, DEVICES, AND EQUIPMENT NEEDED DUE TO THESE DIFFERENCES AT THEIR EXPENSE. THE CONTRACTOR IS RESPONSIBLE FOR COORDINATING MECHANICAL EQUIPMENT ELECTRICAL REQUIREMENTS WITH THE ELECTRICAL TRADE.

Michael Baker
INTERNATIONAL
12740 GRAN BAY PKWY W
SUITE 2110
JACKSONVILLE, FL 32258

Consultant

THE OFFICIAL RECORD OF THIS SHEET IS THE ELECTRONIC FILE DIGITALLY SIGNED AND SEALED UNDER RULE 61G15-23.004, F.A.C.

SEAL

NO.	DATE	DESCRIPTION

REVISIONS

FDOT

FDOT D3 OPERATIONS CENTER
CHIPLEY, FL 32428

MECHANICAL - SCHEDULES

Project Number: 4483951-52-01
Date: 07-10-2026
Scale: AS NOTED
Sheet # M-603

PHASE IV - FINAL DESIGN SUBMITTAL 7/7/2026 11:58:52 AM

© Baker 2018

VARIABLE AIR VOLUME (VAV) BOX SCHEDULE

TAG	SPACE SERVED	AIRFLOW (CFM)		INLET DUCT SIZE (DIA)	BASIS OF DESIGN		NOTES
		MAX	MIN		MANUF	MODEL	
VAV-101	130 - OFFICE; 132 - OFFICE; 134 - OFFICE; 135 - DEPT. HEAD	85	85	4	TITUS	DESV	1, 2
VAV-102	136 - DEPUTY; 138 - OFFICE; 140 - OFFICE	60	30	4	TITUS	DESV	1, 2
VAV-103	143 - STORAGE / LARGE PRINTER AREA; 146 - CIRC.	190	190	5	TITUS	DESV	1
VAV-104A	124 - STOR; 131 - OFFICE; 133 - OFFICE; 144 - OFFICE; 145 - OFFICE	100	100	5	TITUS	DESV	1
VAV-104B	137 - OFFICE; 139 - OFFICE; 141 - OFFICE	60	30	4	TITUS	DESV	1, 2
VAV-105	128 - OFFICE; 129 - OFFICE	40	40	4	TITUS	DESV	1
VAV-106	105 - CONF.	115	30	5	TITUS	DESV	1, 2
VAV-107	103 - MF CONF. HALL; 104 - CHAIR STORAGE	360	105	6	TITUS	DESV	1, 2, 3
VAV-108	102 - CIRCC; 110 - LACT.; 127 - PRINT/SUPPLY	80	80	4	TITUS	DESV	1
VAV-109	114 - EOC OPEN OFFICE AREA	150	150	5	TITUS	DESV	1, 4
VAV-110	111 - CIRC.; 115 - EOC CONF.	90	90	4	TITUS	DESV	1, 4
VAV-111	116 - EOC KKITCHEN; 117 - EOC STOR. OVERNIGHT	45	45	4	TITUS	DESV	1, 4
VAV-112	118 - OFFICE; 119 - OFFICE	40	30	4	TITUS	DESV	1, 2
VAV-113	120 - BREAK ROOM	100	45	4	TITUS	DESV	1, 2
VAV-114	121 - TMC SERVER; 122 - FDOT SERVER	50	50	4	TITUS	DESV	1, 4
VAV-115	CONSTANT EXHAUST	805	805	8	TITUS	DESV	1, 4
VAV-116	VARIABLE EXHAUST	715	270	8	TITUS	DESV	1, 4
VAV-201	252 - DEPUTY; 253 - OFFICE; 255 - OFFICE; 256 - OFFICE	85	40	4	TITUS	DESV	1, 2
VAV-202	246 - DEPUTY; 248 - OFFICE; 250 - DEPUTY	65	35	4	TITUS	DESV	1, 2
VAV-203	240 - DEPUTY; 242 - OFFICE; 244 - DEPUTY	65	30	4	TITUS	DESV	1, 2
VAV-204	234 - OFFICE; 236 - OFFICE; 238 - OFFICE; 239 - DEPT. HEAD	85	40	4	TITUS	DESV	1, 2
VAV-205	226 - PRINT/SUPPLY; 265 - CIRC.	220	220	6	TITUS	DESV	1, 4
VAV-206	245 - OFFICE; 247 - OFFICE; 249 - OFFICE; 251 - OFFICE; 254 - OFFICE; 257 - STOR.	120	50	5	TITUS	DESV	1, 2
VAV-207	243 - PRINT/SUPPLY; 259 - STOR.; 261 - BREAK RM	155	155	5	TITUS	DESV	1
VAV-208	233 - OFFICE; 235 - OFFICE; 237 - OFFICE	60	25	4	TITUS	DESV	1, 2
VAV-209	202 - OFFICE; 204 - OFFICE; 206 - OFFICE; 208 - DEPT. HEAD	90	45	4	TITUS	DESV	1, 2
VAV-210	201 - OFFICE; 203 - OFFICE; 205 - OFFICE	60	60	4	TITUS	DESV	1
VAV-211	258 - CONF.	135	35	5	TITUS	DESV	1, 2
VAV-212	207 - OFFICE; 210 - OFFICE; 212 OFFICE; 214- OFFICE	80	30	4	TITUS	DESV	1, 2
VAV-213	216 - OFFICE; 218 - OFFICE; 219 - EFB STORAGE; 260 - TELE	80	80	4	TITUS	DESV	1
VAV-214	223 - OFFICE; 228 - DEPUTY; 229 - OFFICE; 230 - OFFICE; 231 - OFFICE; 232 - OFFICE	125	125	4	TITUS	DESV	1
VAV-215	209 - OFFICE; 211 - OFFICE; 213 - OFFICE; 215 - OFFICE	80	30	4	TITUS	DESV	1, 2
VAV-216	217 - OFFICE; 224 - OFFICE; 225 - OFFICE; 227 - OFFICE	80	35	4	TITUS	DESV	1, 2
VAV-217	CONSTANT EXHAUST	615	615	7	TITUS	DESV	1, 4
VAV-218	VARIABLE EXHAUST	930	365	9	TITUS	DESV	1
VAV-301	336 - DEPT. HEAD; 337 - OFFICE; 339 - OFFICE	60	30	4	TITUS	DESV	1, 2
VAV-302	327 - OFFICE; 328 - DEPUTY; 331 - OFFICE; 333 - OFFICE; 335 - OFFICE	100	45	4	TITUS	DESV	1, 2
VAV-303	322 - OFFICE; 324 - DEPUTY; 326 - DEPT. HEAD	65	30	4	TITUS	DESV	1, 2
VAV-304	318 - PRINT; 338 - PRINT - 343; TELE.; 346 - CIRC.	150	150	5	TITUS	DESV	1, 4
VAV-305	323 - OFFICE; 329 - OFFICE; 330 - OFFICE; 332 - OFFICE; 334 - OFFICE	100	100	4	TITUS	DESV	1
VAV-306	341 - OFFICE; 342 - OFFICE; 344 - OFFICE; 345 - OFFICE	80	80	4	TITUS	DESV	1
VAV-307	301 - OFFICE; 303 - OFFICE; 304 - OFFICE	60	25	4	TITUS	DESV	1, 2
VAV-308	302 - CONF.	130	25	5	TITUS	DESV	1, 2
VAV-309	312 - BREAK ROOM	75	75	4	TITUS	DESV	1
VAV-310	307 - OFFICE; 309 - OFFICE; 311 - OFFICE	60	60	4	TITUS	DESV	1
VAV-311	305 - DEPUTY; 306 - OFFICE; 308 - OFFICE; 310 - OFFICE	80	80	4	TITUS	DESV	1
VAV-312	316 - OFFICE; 317 - OFFICE; 319 - DEPUTY; 320 - OFFICE; 321 - STOR.	100	100	4	TITUS	DESV	1
VAV-313	CONSTANT EXHAUST	615	615	7	TITUS	DESV	1, 4
VAV-314	VARIABLE EXHAUST	410	155	6	TITUS	DESV	1

NOTES:

1. VAV / VAV BOXES ARE BEING USED TO PROVIDE VARIABLE VENTILATION/EXHAUST AIRFLOW AS PART OF A DEMAND CONTROLLED VENTILATION STRATEGY FOR ENERGY SAVINGS; BOXES ARE NOT THERMOSTATICALLY CONTROLLED.
2. VAV BOX CONTROLLED VIA OCCUPANCY SENSOR, SEE CONTROLS SEQUENCE OF OPERATION AND ELECTRICAL DRAWINGS.
3. VAV BOX CONTROLLED VIA CO2 SENSOR, SEE CONTROLS SEQUENCE OF OPERATION.
4. MISSION CRITICAL UNIT TO BE PRIORITIZED DURING EMERGENCY OPERATION MODE.

7/6/2026 9:48

CLOSED CIRCUIT FLUID COOLER (CCFC) SCHEDULE

TAG	FLUID TYPE	CAPACITY (MBH)	FLOW (GPM)	PRESS DROP (PSIG)	EWT (°F)	LWT (°F)	AMBIENT WB (°F)	FAN		PUMP		BASIN HEATER (KW)	ELECTRICAL DATA			BASIS OF DESIGN		NOTES
								HP	AIRFLOW (CFM)	SPRAY WATER (GPM)	HP		VOLTS / PHASE / HERTZ	FLA	MOP	MFG.	MODEL	
CCFC-01	WATER	550	100	0.763	98	87	79.5	7.5	46,860	500	5	6	460 / 3 / 60	21	30	TOWER TECH	TTCC	1, 2, 3
CCFC-02	WATER	550	100	0.763	98	87	79.5	7.5	46,860	500	5	6	460 / 3 / 60	21	30	TOWER TECH	TTCC	1, 2, 3

NOTES:

1. PROVIDE FACTORY SUPPLIED POWER CONTROL PANEL FOR SINGLE POINT POWER CONNECTION (460V/3PH/60HZ).
2. PROVIDE MANUFACTURER'S RECOMMENDED STRUCTURAL SUPPORT.
3. PROVIDE UNIT RATED FOR 5000 HOUR SALT SPRAY TESTING IN ACCORDANCE WITH ASME B-117

7/6/2026 9:48

PUMP (P) SCHEDULE

TAG	LOCATION	PUMP TYPE	SERVICE	FLUID TYPE	FLUID TEMP (°F)	GPM	HEAD (FT H2O)	NSPH REQD (FT)	IMPELLER DIAMETER (IN)	MIN EFF. (%)	ELECTRICAL DATA			BASIS OF DESIGN		NOTES
											MTR HP	NOMINAL MOTOR RPM	VOLTS/ PHASE/ HERTZ	MANUF	MODEL	
CWP-01	149 - MECH / FIRE RISER	BASE MTD END SUCTION	CONDENSER WATER SECONDARY LOOP	WATER	103	375	38	5.1	7	83	5	1760	480 / 3 / 60	TACO	FI3007D	1-4
CWP-02	149 - MECH / FIRE RISER	BASE MTD END SUCTION	CONDENSER WATER SECONDARY LOOP	WATER	103	375	38	5.1	7	83	5	1760	480 / 3 / 60	TACO	FI3007D	1-4
CWPP-01	149 - MECH / FIRE RISER	INLINE	CONDENSER WATER PRIMARY LOOP	WATER	87	200	28	4.1	6	81	5	1413	480 / 3 / 60	TACO	SKV3007D	1-4
CWPP-02	149 - MECH / FIRE RISER	INLINE	CONDENSER WATER PRIMARY LOOP	WATER	87	200	28	4.1	6	81	5	1413	480 / 3 / 60	TACO	SKV3007D	1-4
BP-01	149 - MECH / FIRE RISER	INLINE	HOT WATER CIRCULATION - B-01	WATER	53	15	15	-	3	-	0.17	3250	115 / 1 / 60	TACO	IL0011	1-3, 5
BP-02	149 - MECH / FIRE RISER	INLINE	HOT WATER CIRCULATION - B-01	WATER	53	15	15	-	3	-	0.17	3250	115 / 1 / 60	TACO	IL0011	1-3, 5

NOTES:

1. MOTORS SHALL BE PREMIUM EFFICIENCY TYPE.
2. EFFICIENCY LISTED IS BASED ON DESIGN PHASE PUMP SELECTION; SUBMITTED PUMP SHALL HAVE SIMILAR EFFICIENCY OR BETTER.
3. IMPELLER DIAMETER LISTED ON SCHEDULE IS CUT DIAMETER BASED ON DESIGN PHASE PUMP SELECTION.
4. UNIT SHALL BE PROVIDE WITH VARIABLE SPEED DRIVE.
5. BOILER CIRCULATION PUMP TO BE MOUNTED INLINE ON PIPE; CONTROL IN CONJUNCTION WITH BOILER OPERATION.

7/6/2026 9:48

EXPANSION TANK (ET) SCHEDULE

TAG	LOCATION	SERVICE	TYPE	SIZE DIA X H (IN)	CONN. SIZE (IN)	VOLUME (GALLON)		CHARGING PRESSURE (PSI)	BASIS OF DESIGN		NOTES
						TANK	REQUIRED ACCEPTANCE		MANUF	MODEL	
ET-01	149 - MECH/ FIRE RISER	CONDENSER WATER LOOP	BLADDER	20 X 29	1"	23	23	25	TACO	CA90	1

NOTES:

1. HEAVY DUTY BUTYL RUBBER DIAPHRAGM TYPE; 125 PSI RATED DESIGN PRESSURE. TANK TO BE ASME RATED.

7/6/2026 9:48

ELECTRIC BOILER (B) SCHEDULE

TAG	TYPE	MAX OUTPUT (KW)	WATER DATA			BASIS OF DESIGN		ELECTRICAL DATA			BASIS OF DESIGN		NOTES
			EWT (°F)	LWT (°F)	GPM	MANUF	MODEL	VOLT/ PHASE/ HERTZ	FLA	MCA	MANUF	MODEL	
B-01	ELECTRIC	72	58	93	15	CEMLINE	VB30ETB	480 / 3 / 60	87	125	CEMLINE	VB30ETB	1
B-02	ELECTRIC	72	58	93	15	CEMLINE	VB30ETB	480 / 3 / 60	87	125	CEMLINE	VB30ETB	1

NOTES:

1. PROVIDE WITH MULTIPLE BOILER CONTROLLER WITH CAPABILITY TO INTERFACE TO BUILDING DDC SYSTEM.

7/6/2026 9:48

AIR SEPARATION & SEDIMENT REMOVAL TANK (AS) SCHEDULE

TAG	LOCATION	SERVICE	TYPE	GPM	CONNECTION SIZE	INSTALLED WEIGHT (LBS)	BASIS OF DESIGN		NOTES
							MANUF	MODEL	
AS-01	149 - MECH/ FIRE RISER	CONDENSER WATER LOOP	COALSESCING	375	8	325	TACO	4908	1

NOTES:

1. PROVIDE WITH BLOW DOWN CONNECTION AND MANUAL BLOW DOWN VALVE, STRAINER, AND AUTOMATIC AIR VENT.

7/6/2026 9:48

APPROVED EQUIVALENT TO BASIS OF DESIGN IS ACCEPTABLE. THE ELECTRICAL INFORMATION PRESENTED IN THESE SCHEDULES IS BASED ON MECHANICAL EQUIPMENT CATALOG DATA AND/OR SELECTIONS MADE DURING DESIGN. THE CONTRACTOR IS RESPONSIBLE FOR VERIFYING THE ELECTRICAL REQUIREMENTS OF THE ACTUAL MECHANICAL EQUIPMENT PROVIDED. THE CONTRACTOR WILL IDENTIFY ANY AND ALL DIFFERENCES AND IS RESPONSIBLE FOR PROVIDING WIRING, DEVICES, AND EQUIPMENT NEEDED DUE TO THESE DIFFERENCES AT THEIR EXPENSE. THE CONTRACTOR IS RESPONSIBLE FOR COORDINATING MECHANICAL EQUIPMENT ELECTRICAL REQUIREMENTS WITH THE ELECTRICAL TRADE.

Michael Baker INTERNATIONAL
12740 GRAN BAY PKWY W
SUITE 2110
JACKSONVILLE, FL 32258

Consultant

THE OFFICIAL RECORD OF THIS SHEET IS THE ELECTRONIC FILE DIGITALLY SIGNED AND SEALED UNDER RULE 61G15-23.004, F.A.C.

SEAL

NO.	DATE	DESCRIPTION

REVISIONS

FDOT

FDOT D3 OPERATIONS CENTER
CHIPLEY, FL 32428

MECHANICAL - SCHEDULES

Project Number: 4483951-52-01
Date: 07-10-2026
Scale: AS NOTED
Sheet # M-604

PHASE IV - FINAL DESIGN SUBMITTAL 7/7/2026 11:58:53 AM

© Baker 2018

VENTILATION SCHEDULE

ROOM INFORMATION						OUTSIDE AIR (OA)								EXHAUST AIR (EA)							NOTES
						REQ'D AIRFLOW		CALCULATED REQ'D AIRFLOW				DESIGN AIRFLOW (CFM)		REQ'D AIRFLOW		CALC REQ'D AIRFLOW		DESIGN AIRFLOW (CFM)			
NUMBER	NAME	VENTILATION CRITERIA / CLASSIFICATION	SERVED BY	AREA (FT2)	OCCUPANCY (# PEOPLE)	MIN CFM/SF	MIN CFM/ PERSON	CFM/SF	CFM/ PERSON	EZ	TOTAL (CFM)	CONSTANT OA	VARIABLE OA	CFM/SF	FIXTURE COUNT	CFM/ FIXTURE	TOTAL EA REQ'D (CFM)	CONSTANT EA	VARIABLE EA	TRANSFER/ MAKEUP	
101	VEST.	NO REQUIREMENT	-	111																	
102	CIRC.	ASHRAE 62.1 2019 CORRIDORS	VAV-108	608	0	0.06	0	36	0	1.0	36	50								50	
103	MF CONF. HALL	ASHRAE 62.1 2019 MULTIPURPOSE ASSEMBLY	VAV-107	1,489	50	0.06	5	89	250	1.0	339		350						350		
104	CHAIR STORAGE	ASHRAE 62.1 2019 OCCUPIABLE STORAGE (DRY MATERIALS)	VAV-107	265		0.06	5	16	0	1.0	16		10						10		
105	CONF.	ASHRAE 62.1 2019 CONFERENCE / MEETING	VAV-106	479	15	0.06	5	29	75	1.0	104		115						105		
106	FAM.	ASHRAE 62.1 2019 TOILETS - PRIVATE	TRANSFER	115											1	50	50	50			
107	WOMEN'S	ASHRAE 62.1 2019 TOILETS - PUBLIC	TRANSFER	203											4	70	280	280			
108	PLUMB. CHASE	NO REQUIREMENT	-	60																	
109	MEN'S	ASHRAE 62.1 2019 TOILETS PUBLIC	TRANSFER	201											4	70	280	280			
110	LACT.	ASHRAE 62.1 2019 OFFICE SPACE	VAV-108	92	1	0.06	5	6	5	1.0	11	25								25	
111	CIRC.	ASHRAE 62.1 2019 CORRIDORS	VAV-110	245	1	0.06	5	15	5	1.0	20	25								25	
112	M LOCKER	ASHRAE 62.1 2019 LOCKER ROOM	TRANSFER	124										0.25	1	50	81	85			
113	W LOCKER	ASHRAE 62.1 2019 LOCKER ROOM	TRANSFER	123										0.25	1	50	81	85			
114	EOC OPEN OFFICE AREA	ASHRAE 62.1 2019 CONFERENCE / MEETING	VAV-109	974	10	0.06	5	58	50	1.0	108	150								140	
115	EOC CONF.	ASHRAE 62.1 2019 CONFERENCE / MEETING	VAV-110	175	7	0.06	5	11	35	1.0	46	65								65	
116	EOC KITCHEN	ASHRAE 62.1 2019 BREAKROOMS	VAV-111	151	0	0.12	5	18	0	1.0	18	25								25	1
117	EOC STOR. OVERNIGHT	ASHRAE 62.1 2019 OCCUPIABLE STORAGE (DRY MATERIALS)	VAV-111	85	0	0.06	5	5	0	1.0	5	20								20	
118	OFFICE	ASHRAE 62.1 2019 OFFICE SPACE	VAV-112	107	1	0.06	5	6	5	1.0	11		20						20		
119	OFFICE	ASHRAE 62.1 2019 OFFICE SPACE	VAV-112	107	1	0.06	5	6	5	1.0	11		20						20		
120	BREAK ROOM	ASHRAE 62.1 2019 BREAKROOMS	VAV-113	361	8	0.12	5	43	40	1.0	83		100						90		
121	TMC SERVER	ASHRAE 62.1 2019 COMPUTER (NOT PRINTING)	VAV-114	240	0	0.06	5	14	0	1.0	14	25								20	
122	FDOT SERVER	ASHRAE 62.1 2019 COMPUTER (NOT PRINTING)	VAV-114	240	0	0.06	5	14	0	1.8	8	25								20	
123	JAN.	ASHRAE 62.1 2019 JANITOR CLOSETS	TRANSFER	25										1			25	25			
124	STOR. (W/HIGH DENSITY SHELVES)	ASHRAE 62.1 2019 OCCUPIABLE STORAGE (DRY MATERIALS)	VAV-104A	265	0	0.06	5	16	0	1.0	16	20								20	
125	ELEV. MECH.	NO REQUIREMENT	-	76																	
126	ELEC	NO REQUIREMENT	-	32																	
127	PRINT/SUPPLY	ASHRAE 62.1 2019 CORRIDORS	VAV-108	47	0	0.06	5	3	0	1.0	3	5								5	
128	OFFICE	ASHRAE 62.1 2019 OFFICE SPACE	VAV-105	132	1	0.06	5	8	5	1.0	13	20								20	
129	OFFICE	ASHRAE 62.1 2019 OFFICE SPACE	VAV-105	113	1	0.06	5	7	5	1.0	12	20								20	
130	OFFICE	ASHRAE 62.1 2019 OFFICE SPACE	VAV-101	126	1	0.06	5	8	5	1.0	13	20								20	
131	OFFICE	ASHRAE 62.1 2019 OFFICE SPACE	VAV-104A	118	1	0.06	5	7	5	1.0	12	20								20	
132	OFFICE	ASHRAE 62.1 2019 OFFICE SPACE	VAV-101	129	1	0.06	5	8	5	1.0	13	20								20	
133	OFFICE	ASHRAE 62.1 2019 OFFICE SPACE	VAV-104A	115	1	0.06	5	7	5	1.0	12	20								20	
134	OFFICE	ASHRAE 62.1 2019 OFFICE SPACE	VAV-101	116	1	0.06	5	7	5	1.0	12	20								20	
135	DEPT. HEAD	ASHRAE 62.1 2019 OFFICE SPACE	VAV-101	235	1	0.06	5	14	5	1.0	19	25								20	
136	DEPUTY	ASHRAE 62.1 2019 OFFICE SPACE	VAV-102	178	1	0.06	5	11	5	1.0	16		20						20		
137	OFFICE	ASHRAE 62.1 2019 OFFICE SPACE	VAV-104B	119	1	0.06	5	7	5	1.0	12		20						20		
138	OFFICE	ASHRAE 62.1 2019 OFFICE SPACE	VAV-102	128	1	0.06	5	8	5	1.0	13		20						20		
139	OFFICE	ASHRAE 62.1 2019 OFFICE SPACE	VAV-104B	123	1	0.06	5	7	5	1.0	12		20						20		
140	OFFICE	ASHRAE 62.1 2019 OFFICE SPACE	VAV-102	138	1	0.06	5	8	5	1.0	13		20						20		
141	OFFICE	ASHRAE 62.1 2019 OFFICE SPACE	VAV-104B	127	1	0.06	5	8	5	1.0	13		20						20		
142	VESTIBULE	NO REQUIREMENT	-																		
143	STORAGE/LARGE PRINTER AREA	ASHRAE 62.1 2019 OCCUPIABLE STORAGE (DRY MATERIALS)	VAV-103	480	0	0.06	5	29	0	1.0	29	40								40	
144	OFFICE	ASHRAE 62.1 2019 OFFICE SPACE	VAV-104A	115	1	0.06	5	7	5	1.0	12	20								20	
145	OFFICE	ASHRAE 62.1 2019 OFFICE SPACE	VAV-104A	118	1	0.06	5	7	5	1.0	12	20								20	
146	CIRC.	ASHRAE 62.1 2019 CORRIDORS	VAV-103	1,680	0	0.06	0	101	0	1.0	101	150								150	
147	MECH/ FIRE RISER	NO REQUIREMENT	-	774																	
148	ELEC	NO REQUIREMENT	-	182																	
149	EM. ELEC	NO REQUIREMENT	-	61																	
400	STAIR A	NO REQUIREMENT	-	260																	
401	STAIR B	NO REQUIREMENT	-	261																	
402	ELEV	NO REQUIREMENT	-	64																	
											LEVEL 01 Σ ASHRAE AREA + OCCUPANCY CALCULATION:	1,188	830	735				805	715	805	
											LEVEL 01 Σ CONSTANT + VARIABLE DESIGN OA:		1,565			LEVEL 01 Σ CONST + VAR DESIGN EA:		1,520			
											LEVEL 01 PRESSURIZATION:		3%	3%							

NOTES: 1. SPACE PROVIDED WITH EXHAUST VIA USER OPERATED MICROWAVE/HOOD EXHAUST.
2. VENTILATION AIRFLOW INCLUDED WITH CORRIDOR

Michael Baker INTERNATIONAL
12740 GRAN BAY PKWY W
SUITE 2110
JACKSONVILLE, FL 32258

Consultant

THE OFFICIAL RECORD OF THIS SHEET IS THE ELECTRONIC FILE DIGITALLY SIGNED AND SEALED UNDER RULE 61G15-23.004, F.A.C.

SEAL

REVISIONS

NO.	DATE	DESCRIPTION

FDOT

FDOT D3 OPERATIONS CENTER
CHIPLEY, FL 32428

MECHANICAL - SCHEDULES

Project Number: 4483951-52-01
Date: 07-10-2026
Scale: AS NOTED
Sheet # M-605

PHASE IV - FINAL DESIGN SUBMITTAL 7/7/2026 11:58:54 AM

© Baker 2018

VENTILATION SCHEDULE

ROOM INFORMATION						OUTSIDE AIR (OA)								EXHAUST AIR (EA)							NOTES
						REQ'D AIRFLOW		CALCULATED REQ'D AIRFLOW				DESIGN AIRFLOW (CFM)		REQ'D AIRFLOW		CALC REQ'D AIRFLOW		DESIGN AIRFLOW (CFM)			
NUMBER	NAME	VENTILATION CRITERIA / CLASSIFICATION	SERVED BY	AREA (FT2)	OCCUPANCY (# PEOPLE)	MIN CFM/SF	MIN CFM/ PERSON	CFM/SF	CFM/ PERSON	EZ	TOTAL (CFM)	CONSTANT OA	VARIABLE OA	CFM/SF	FIXTURE COUNT	CFM/ FIXTURE	TOTAL EA REQ'D (CFM)	CONSTANT EA	VARIABLE EA	TRANSFER/ MAKEUP	
201	OFFICE	ASHRAE 62.1 2019 OFFICE SPACE	VAV-210	125	1	0.06	5	8	5	1.0	13	20								20	
202	OFFICE	ASHRAE 62.1 2019 OFFICE SPACE	VAV-209	118	1	0.06	5	7	5	1.0	12		20						20		
203	OFFICE	ASHRAE 62.1 2019 OFFICE SPACE	VAV-210	123	1	0.06	5	7	5	1.0	12	20								20	
204	OFFICE	ASHRAE 62.1 2019 OFFICE SPACE	VAV-209	122	1	0.06	5	7	5	1.0	12		20						20		
205	OFFICE	ASHRAE 62.1 2019 OFFICE SPACE	VAV-210	133	1	0.06	5	8	5	1.0	13	20								20	
206	DEPUTY	ASHRAE 62.1 2019 OFFICE SPACE	VAV-209	198	1	0.06	5	12	5	1.0	17		25						20		
207	OFFICE	ASHRAE 62.1 2019 OFFICE SPACE	VAV-212	112	1	0.06	5	7	5	1.0	12		20						20		
208	DEPT. HEAD	ASHRAE 62.1 2019 OFFICE SPACE	VAV-209	251	1	0.06	5	15	5	1.0	20		25						25		
209	OFFICE	ASHRAE 62.1 2019 OFFICE SPACE	VAV-215	121	1	0.06	5	7	5	1.0	12		20						20		
210	OFFICE	ASHRAE 62.1 2019 OFFICE SPACE	VAV-212	112	1	0.06	5	7	5	1.0	12		20						20		
211	OFFICE	ASHRAE 62.1 2019 OFFICE SPACE	VAV-215	121	1	0.06	5	7	5	1.0	12		20						20		
212	OFFICE	ASHRAE 62.1 2019 OFFICE SPACE	VAV-212	111	1	0.06	5	7	5	1.0	12		20						20		
213	OFFICE	ASHRAE 62.1 2019 OFFICE SPACE	VAV-215	121	1	0.06	5	7	5	1.0	12		20						20		
214	OFFICE	ASHRAE 62.1 2019 OFFICE SPACE	VAV-212	112	1	0.06	5	7	5	1.0	12		20						20		
215	OFFICE	ASHRAE 62.1 2019 OFFICE SPACE	VAV-215	121	1	0.06	5	7	5	1.0	12		20						20		
216	OFFICE	ASHRAE 62.1 2019 OFFICE SPACE	VAV-213	114	1	0.06	5	7	5	1.0	12	20								20	
217	OFFICE	ASHRAE 62.1 2019 OFFICE SPACE	VAV-216	121	1	0.06	5	7	5	1.0	12		20						20		
218	OFFICE	ASHRAE 62.1 2019 OFFICE SPACE	VAV-213	136	1	0.06	5	8	5	1.0	13	20								20	
219	EFB STORAGE	ASHRAE 62.1 2019 OCCUPIABLE STORAGE (DRY MATERIALS)	VAV-213	156	0	0.06	5	9	0	1.0	9	20								20	
220	WOMEN'S	ASHRAE 62.1 2019: TOILETS (PUBLIC)	TRANSFER	203											4	70	280	280			
221	PLUMB. CHASE	NO REQUIREMENT	-	60																	
222	MEN'S	ASHRAE 62.1 2019: TOILETS (PUBLIC)	TRANSFER	201											4	70	280	280			
223	OFFICE	ASHRAE 62.1 2019 OFFICE SPACE	VAV-214	135	1	0.06	5	8	5	1.0	13	20								20	
224	OFFICE	ASHRAE 62.1 2019 OFFICE SPACE	VAV-216	131	1	0.06	5	8	5	1.0	13		20						20		
225	OFFICE	ASHRAE 62.1 2019 OFFICE SPACE	VAV-216	131	1	0.06	5	8	5	1.0	13		20						20		
226	PRINT/SUPPLY	ASHRAE 62.1 2019 CORRIDORS	VAV-205	66	0	0.06	5	4	0	1.0	4	10								10	
227	OFFICE	ASHRAE 62.1 2019 OFFICE SPACE	VAV-216	179	1	0.06	5	11	5	1.0	16		20						20		
228	DEPUTY	ASHRAE 62.1 2019 OCCUPIABLE STORAGE (DRY MATERIALS)	VAV-214	236	1	0.06	5	14	5	1.0	19	25								25	
229	OFFICE	ASHRAE 62.1 2019 OFFICE SPACE	VAV-214	135	1	0.06	5	8	5	1.0	13	20								20	
230	OFFICE	ASHRAE 62.1 2019 OFFICE SPACE	VAV-214	135	1	0.06	5	8	5	1.0	13	20								20	
231	OFFICE	ASHRAE 62.1 2019 OFFICE SPACE	VAV-214	123	1	0.06	5	7	5	1.0	12	20								20	
232	OFFICE	ASHRAE 62.1 2019 OFFICE SPACE	VAV-214	118	1	0.06	5	7	5	1.0	12	20								20	
233	OFFICE	ASHRAE 62.1 2019 OFFICE SPACE	VAV-208	124	1	0.06	5	7	5	1.0	12		20						20		
234	OFFICE	ASHRAE 62.1 2019 OFFICE SPACE	VAV-204	125	1	0.06	5	8	5	1.0	13		20						20		
235	OFFICE	ASHRAE 62.1 2019 OFFICE SPACE	VAV-208	118	1	0.06	5	7	5	1.0	12		20						20		
236	OFFICE	ASHRAE 62.1 2019 OFFICE SPACE	VAV-204	119	1	0.06	5	7	5	1.0	12		20						20		
237	OFFICE	ASHRAE 62.1 2019 OFFICE SPACE	VAV-208	124	1	0.06	5	7	5	1.0	12		20						20		
238	OFFICE	ASHRAE 62.1 2019 OFFICE SPACE	VAV-204	132	1	0.06	5	8	5	1.0	13		20						20		
239	DEPT. HEAD	ASHRAE 62.1 2019 OFFICE SPACE	VAV-204	221	1	0.06	5	13	5	1.0	18		25						25		
240	DEPUTY	ASHRAE 62.1 2019 OFFICE SPACE	VAV-203	203	1	0.06	5	12	5	1.0	17		25						20		
241	MECH	NO REQUIREMENT	-	119																	
242	OFFICE	ASHRAE 62.1 2019 OFFICE SPACE	VAV-203	139	1	0.06	5	8	5	1.0	13		20						20		
243	PRINT/SUPPLY	ASHRAE 62.1 2019 OCCUPIABLE STORAGE (DRY MATERIALS)	VAV-207	325	0	0.06	5	20	0	1.0	20	25								25	
244	DEPUTY	ASHRAE 62.1 2019 OFFICE SPACE	VAV-203	191	1	0.06	5	7	5	1.0	15		20						20		
245	OFFICE	ASHRAE 62.1 2019 OFFICE SPACE	VAV-206	139	1	0.06	5	8	5	1.0	13		20						20		
246	DEPUTY	ASHRAE 62.1 2019 OFFICE SPACE	VAV-202	210	1	0.06	5	13	5	1.0	18		25						20		
247	OFFICE	ASHRAE 62.1 2019 OFFICE SPACE	VAV-206	124	1	0.06	5	7	5	1.0	12		20						20		
248	OFFICE	ASHRAE 62.1 2019 OFFICE SPACE	VAV-202	135	1	0.06	5	8	5	1.0	13		20						20		
249	OFFICE	ASHRAE 62.1 2019 OFFICE SPACE	VAV-206	125	1	0.06	5	8	5	1.0	13		20						20		
250	DEPUTY	ASHRAE 62.1 2019 OFFICE SPACE	VAV-202	188	1	0.06	5	11	5	1.0	16		20						20		
251	OFFICE	ASHRAE 62.1 2019 OFFICE SPACE	VAV-206	125	1	0.06	5	8	5	1.0	13		20						20		
252	DEPUTY	ASHRAE 62.1 2019 OFFICE SPACE	VAV-201	222	1	0.06	5	13	5	1.0	18		25						25		
253	OFFICE	ASHRAE 62.1 2019 OFFICE SPACE	VAV-201	132	1	0.06	5	8	5	1.0	13		20						20		
254	OFFICE	ASHRAE 62.1 2019 OFFICE SPACE	VAV-206	120	1	0.06	5	7	5	1.0	12		20						20		
255	OFFICE	ASHRAE 62.1 2019 OFFICE SPACE	VAV-201	119	1	0.06	5	7	5	1.0	12		20						20		
256	OFFICE	ASHRAE 62.1 2019 OFFICE SPACE	VAV-201	125	1	0.06	5	8	5	1.0	13		20						20		
257	STOR.	ASHRAE 62.1 2019 OCCUPIABLE STORAGE (DRY MATERIALS)	VAV-206	130	0	0.06	5	8	0	1.0	8		20						20		
258	CONF.	ASHRAE 62.1 2019 CONFERENCE / MEETING	VAV-211	537	15	0.06	5	32	75	1.0	107		135						135		
259	STOR.	ASHRAE 62.1 2019 OCCUPIABLE STORAGE (DRY MATERIALS)	VAV-207	263	0	0.06	5	16	0	1.0	16	20								20	
260	TELE.	ASHRAE 62.1 2019 COMPUTER (NOT PRINTING)	VAV-213A	103	0	0.06	5	6	0	1.0	6	20								20	
261	BREAK RM	ASHRAE 62.1 2019 BREAKROOMS	VAV-207	511	5	0.12	5	61	25	1.0	86	110								110	
262	JAN.	ASHRAE 62.1 2019: JANITOR CLOSET	TRANSFER	52										1			52	55			
263	ELEC	NO REQUIREMENT	-	174																20	
264	MECH. SHAFT	NO REQUIREMENT	-	51																	
265	CIRC.	ASHRAE 62.1 2019 CORRIDORS	VAV-205	2,691	0	0.06		161	0	1.0	161	210								210	
										LEVEL 02 Σ ASHRAE AREA + OCCUPANCY CALCULATION:	883	640	945					615	930	660	
											LEVEL 02 Σ CONSTANT + VARIABLE DESIGN OA:	1,585				LEVEL 02 Σ CONST + VAR DESIGN EA:	1,545			
											LEVEL 02 PRESSURIZATION:	4%	3%								

NOTES: 1. SPACE PROVIDED WITH EXHAUST VIA USER OPERATED MICROWAVE/HOOD EXHAUST.
2. VENTILATION AIRFLOW INCLUDED WITH CORRIDOR

Michael Baker INTERNATIONAL
12740 GRAN BAY PKWY W
SUITE 2110
JACKSONVILLE, FL 32258

Consultant

THE OFFICIAL RECORD OF THIS SHEET IS THE ELECTRONIC FILE DIGITALLY SIGNED AND SEALED UNDER RULE 61G15-23.004, F.A.C.

SEAL

REVISIONS

NO.	DATE	DESCRIPTION

FDOT

FDOT D3 OPERATIONS CENTER
CHIPLEY, FL 32428

MECHANICAL - SCHEDULES

Project Number: 4483951-52-01
Date: 07-10-2026
Scale: AS NOTED
Sheet # M-606

PHASE IV - FINAL DESIGN SUBMITTAL 7/7/2026 11:58:54 AM

© Baker 2018

VENTILATION SCHEDULE

ROOM INFORMATION						OUTSIDE AIR (OA)								EXHAUST AIR (EA)							NOTES
						REQ'D AIRFLOW		CALCULATED REQ'D AIRFLOW				DESIGN AIRFLOW (CFM)		REQ'D AIRFLOW		CALC REQ'D AIRFLOW		DESIGN AIRFLOW (CFM)			
NUMBER	NAME	VENTILATION CRITERIA / CLASSIFICATION	SERVED BY	AREA (FT2)	OCCUPANCY (# PEOPLE)	MIN CFM/SF	MIN CFM/ PERSON	CFM/SF	CFM/ PERSON	EZ	TOTAL (CFM)	CONSTANT OA	VARIABLE OA	CFM/SF	FIXTURE COUNT	CFM/ FIXTURE	TOTAL EA REQ'D (CFM)	CONSTANT EA	VARIABLE EA	TRANSFER/ MAKEUP	
301	OFFICE	ASHRAE 62.1 2019 OFFICE SPACE	VAV-307	139	1	0.06	5	8	5	1.0	13		20						20		
302	CONF.	ASHRAE 62.1 2019 CONFERENCE / MEETING	VAV-308	342	20	0.06	5	21	100	1.0	121		130						130		
303	OFFICE	ASHRAE 62.1 2019 OFFICE SPACE	VAV-307	119	1	0.06	5	7	5	1.0	12		20						20		
304	OFFICE	ASHRAE 62.1 2019 OFFICE SPACE	VAV-307	118	1	0.06	5	7	5	1.0	12		20						20		
305	DEPUTY	ASHRAE 62.1 2019 OFFICE SPACE	VAV-311	169	1	0.06	5	10	5	1.0	15	20								20	
306	OFFICE	ASHRAE 62.1 2019 OFFICE SPACE	VAV-311	113	1	0.06	5	7	5	1.0	12	20								20	
307	OFFICE	ASHRAE 62.1 2019 OFFICE SPACE	VAV-310	120	1	0.06	5	7	5	1.0	12	20								20	
308	OFFICE	ASHRAE 62.1 2019 OFFICE SPACE	VAV-311	124	1	0.06	5	7	5	1.0	12	20								20	
309	OFFICE	ASHRAE 62.1 2019 OFFICE SPACE	VAV-310	125	1	0.06	5	8	5	1.0	13	20								20	
310	OFFICE	ASHRAE 62.1 2019 OFFICE SPACE	VAV-311	125	1	0.06	5	8	5	1.0	13	20								20	
311	OFFICE	ASHRAE 62.1 2019 OFFICE SPACE	VAV-310	120	1	0.06	5	7	5	1.0	12	20								20	
312	BREAK ROOM	ASHRAE 62.1 2019 BREAKROOMS	VAV-309	280	8	0.12	5	34	40	1.0	74	75								75	
313	WOMEN'S	ASHRAE 62.1-2019: TOILETS (PUBLIC)	TRANSFER	203											4	70	280	280			
314	PLUMB. CHASE	NO REQIREMENT	-	60																	
315	MEN'S	ASHRAE 62.1-2019: TOILETS (PUBLIC)	TRANSFER	201											4	70	280	280			
316	OFFICE	ASHRAE 62.1 2019 OFFICE SPACE	VAV-312	114	1	0.06	5	7	5	1.0	12	20								20	
317	OFFICE	ASHRAE 62.1 2019 OFFICE SPACE	VAV-312	109	1	0.06	5	7	5	1.0	12	20								20	
318	PRINT	ASHRAE 62.1 2019 CORRIDORS	VAV-304	78	0	0.06	5	5	0	1.0	5	5								5	
319	DEPUTY	ASHRAE 62.1 2019 OFFICE SPACE	VAV-312	172	1	0.06	5	10	5	1.0	15	20								20	
320	OFFICE	ASHRAE 62.1 2019 OFFICE SPACE	VAV-312	123	1	0.06	5	7	5	1.0	12	20								20	
321	STOR.	ASHRAE 62.1 2019 OCCUPIABLE STORAGE (DRY MATERIALS)	VAV-312	112	0	0.12	5	13	0	1.0	13	20								20	
322	OFFICE	ASHRAE 62.1 2019 OFFICE SPACE	VAV-303	109	1	0.06	5	7	5	1.0	12		20						20		
323	OFFICE	ASHRAE 62.1 2019 OFFICE SPACE	VAV-305	127	1	0.06	5	8	5	1.0	13	20								20	
324	DEPUTY	ASHRAE 62.1 2019 OFFICE SPACE	VAV-303	172	1	0.06	5	10	5	1.0	15		20						20		
326	DEPT. HEAD	ASHRAE 62.1 2019 OFFICE SPACE	VAV-303	222	1	0.06	5	13	5	1.0	18		25						20		
327	OFFICE	ASHRAE 62.1 2019 OFFICE SPACE	VAV-302	121	1	0.06	5	7	5	1.0	12		20						20		
328	DEPUTY	ASHRAE 62.1 2019 OFFICE SPACE	VAV-302	188	1	0.06	5	11	5	1.0	16		20						20		
329	OFFICE	ASHRAE 62.1 2019 OFFICE SPACE	VAV-305	114	1	0.06	5	7	5	1.0	12	20								20	
330	OFFICE	ASHRAE 62.1 2019 OFFICE SPACE	VAV-305	115	1	0.06	5	7	5	1.0	12	20								20	
331	OFFICE	ASHRAE 62.1 2019 OFFICE SPACE	VAV-302	125	1	0.06	5	8	5	1.0	13		20						20		
332	OFFICE	ASHRAE 62.1 2019 OFFICE SPACE	VAV-305	115	1	0.06	5	7	5	1.0	12	20								20	
333	OFFICE	ASHRAE 62.1 2019 OFFICE SPACE	VAV-302	120	1	0.06	5	7	5	1.0	12		20						20		
334	OFFICE	ASHRAE 62.1 2019 OFFICE SPACE	VAV-305	115	1	0.06	5	7	5	1.0	12	20								20	
335	OFFICE	ASHRAE 62.1 2019 OFFICE SPACE	VAV-302	121	1	0.06	5	7	5	1.0	12		20						20		
336	DEPT. HEAD	ASHRAE 62.1 2019 OFFICE SPACE	VAV-301	240	1	0.06	5	14	5	1.0	19		20						20		
337	OFFICE	ASHRAE 62.1 2019 OFFICE SPACE	VAV-301	121	1	0.06	5	7	5	1.0	12		20						20		
338	PRINT	ASHRAE 62.1 2019 CORRIDORS	VAV-304	63	0	0.06	5	4	0	1.0	4	5								5	
339	OFFICE	ASHRAE 62.1 2019 OFFICE SPACE	VAV-301	118	1	0.06	5	7	5	1.0	12		20						20		
340	JAN.	ASHRAE 62.1 2019: JANITOR CLOSET	TRANSFER	38										1			38	55			
341	OFFICE	ASHRAE 62.1 2019 OFFICE SPACE	VAV-306	119	1	0.06	5	7	5	1.0	12	20								20	
342	OFFICE	ASHRAE 62.1 2019 OFFICE SPACE	VAV-306	119	1	0.06	5	7	5	1.0	12	20								20	
343	TELE.	ASHRAE 62.1 2019 COMPUTER (NOT PRINTING)	VAV-304	52	0	0.06	5	3	0	1.0	3	20								20	
344	OFFICE	ASHRAE 62.1 2019 OFFICE SPACE	VAV-306	119	1	0.06	5	7	5	1.0	12	20								20	
345	OFFICE	ASHRAE 62.1 2019 OFFICE SPACE	VAV-306	119	1	0.06	5	7	5	1.0	12	20								20	
346	ELEC.	NO REQUIREMENT	-	44																	
347	CIRC.	ASHRAE 62.1 2019 CORRIDORS	VAV-304	2,005	0	0.06	0	120	0	1.0	120	120								120	
										LEVEL 03 Σ ASHRAE AREA + OCCUPANCY CALCULATION:	780	645	415					615	410	645	
										LEVEL 03 Σ CONSTANT + VARIABLE DESIGN OA:		1,060			LEVEL 03 Σ CONST + VAR DESIGN EA:			1,025			
										LEVEL 03 PRESSURIZATION (DESIGN OA / DESIGN EA REQ'D):		5%	3%								
										DOAS-01 Σ DESIGN OA:		2,115	2,095			DOAS-01 Σ DESIGN EA:		2,035	2,055		
										DOAS-01 Σ CONSTANT + VARIABLE DESIGN OA:		4,210				DOAS-01 Σ CONST + VAR DESIGN EA:		4,090			
										AIR LEAKAGE ALLOWANCE:	5%	220									
										DOAS-01 DESIGN OA:		**4,430**				**DOAS-01 DESIGN EA:**		**4,090**			

NOTES: 1. **SPACE PROVIDED WITH EXHAUST VIA USER OPERATED MICROWAVE/HOOD EXHAUST.**
2. **VENTILATION AIRFLOW INCLUDED WITH CORRIDOR**

Michael Baker
INTERNATIONAL
12740 GRAN BAY PKWY W
SUITE 2110
JACKSONVILLE, FL 32258

Consultant

THE OFFICIAL RECORD OF THIS SHEET IS THE ELECTRONIC FILE DIGITALLY SIGNED AND SEALED UNDER RULE 61G15-23.004, F.A.C.

SEAL

REVISIONS

NO.	DATE	DESCRIPTION

FDOT

FDOT D3 OPERATIONS CENTER
CHIPLEY, FL 32428

MECHANICAL - SCHEDULES

Project Number: **4483951-52-01**
Date: **07-10-2026**
Scale: **AS NOTED**
Sheet # M-607

PHASE IV - FINAL DESIGN SUBMITTAL **7/7/2026 11:58:54 AM**

© Baker 2018

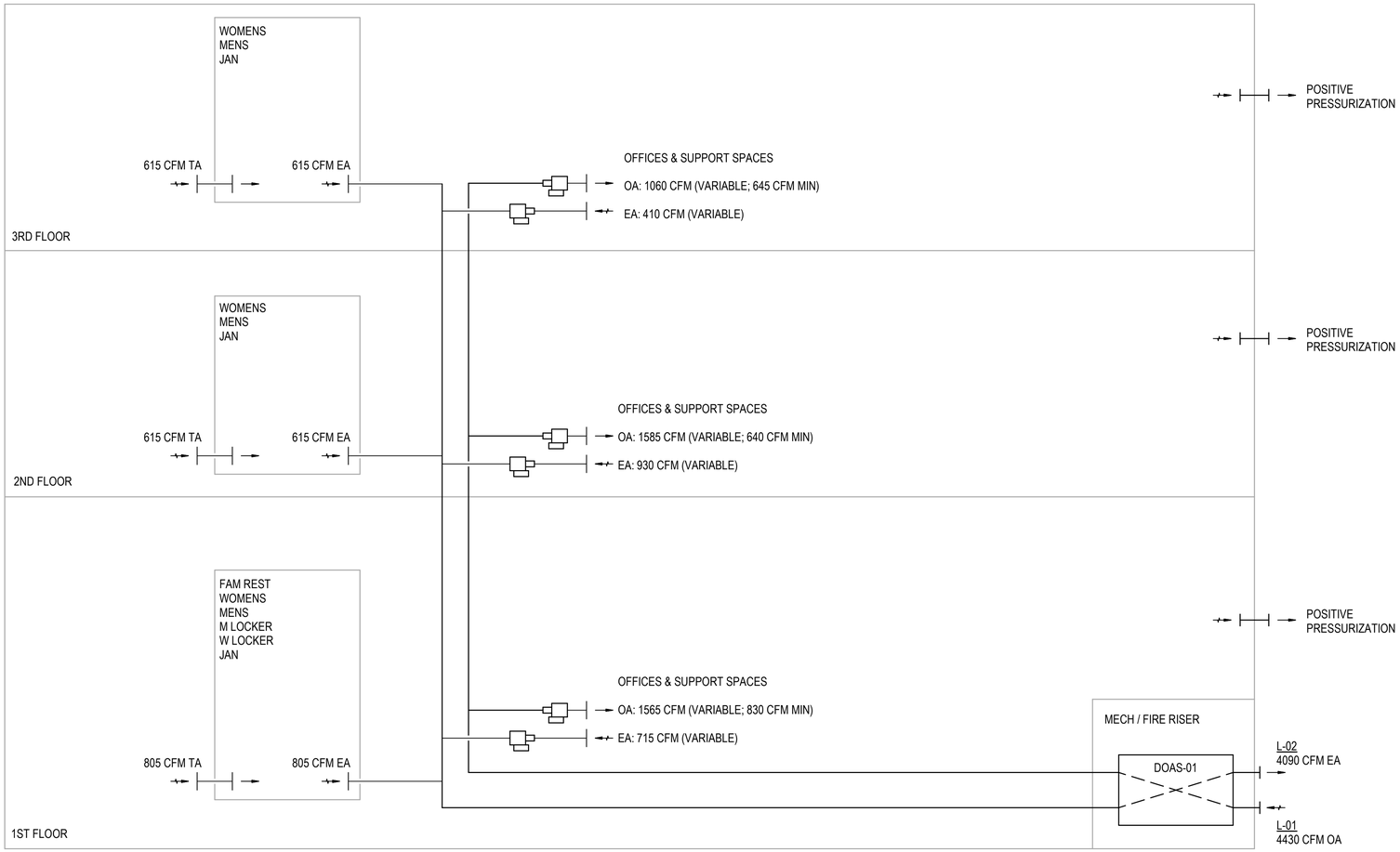

FACILITY AIR BALANCE	DESIGN AIRFLOW (CFM)	
	CONSTANT	VARIABLE
LEVEL 03 Σ DESIGN OA:	645	415
LEVEL 03 Σ CONSTANT + VARIABLE DESIGN OA:	1,060	
LEVEL 03 Σ DESIGN EA:	615	410
LEVEL 03 Σ CONSTANT + VARIABLE DESIGN EA:	1,025	
LEVEL 03 PRESSURIZATION (%):	5%	3%
LEVEL 03 PRESSURIZATION:	30	5
LEVEL 02 Σ DESIGN OA:	640	945
LEVEL 02 Σ CONSTANT + VARIABLE DESIGN OA:	1,585	
LEVEL 02 Σ DESIGN EA:	615	930
LEVEL 02 Σ CONSTANT + VARIABLE DESIGN EA:	1,545	
LEVEL 02 PRESSURIZATION (%):	4%	3%
LEVEL 02 PRESSURIZATION:	25	15
LEVEL 01 Σ DESIGN OA:	830	735
LEVEL 01 Σ CONSTANT + VARIABLE DESIGN OA:	1,565	
LEVEL 01 Σ DESIGN EA:	805	715
LEVEL 01 Σ CONSTANT + VARIABLE DESIGN EA:	1,520	
LEVEL 01 PRESSURIZATION (%):	3%	3%
LEVEL 01 PRESSURIZATION:	25	20

NOTE:
SEE VENTILATION SCHEDULE FOR INDIVIDUAL SPACE AIRFLOWS

1 AIR BALANCE DIAGRAM
SCALE: NTS

Michael Baker
INTERNATIONAL
12740 GRAN BAY PKWY W
SUITE 2110
JACKSONVILLE, FL 32258

Consultant

THE OFFICIAL RECORD OF THIS SHEET IS THE ELECTRONIC FILE DIGITALLY SIGNED AND SEALED UNDER RULE 61G15-23.004, F.A.C.

SEAL

NO.	DATE	DESCRIPTION

REVISIONS

FDOT

FDOT D3 OPERATIONS CENTER
CHIPLEY, FL 32428

MECHANICAL - DIAGRAMS

Project Number: 4483951-52-01
Date: 07-10-2026
Scale: AS NOTED
Sheet # M-701

© Baker 2018

PHASE IV - FINAL DESIGN SUBMITTAL 7/7/2026 11:58:54 AM

KEYNOTES

1. NORMALLY OPEN MANUAL SHUTOFF VALVE FOR USE ONLY WHEN UTILIZING TEMPORARY / EMERGENCY MECHANICAL EQUIPMENT AT THE REMOTE CONNECTION POINTS.
2. NORMALLY CLOSED MANUAL SHUTOFF VALVE FOR USE ONLY WHEN UTILIZING TEMPORARY / EMERGENCY MECHANICAL EQUIPMENT AT THE REMOTE CONNECTION POINTS.

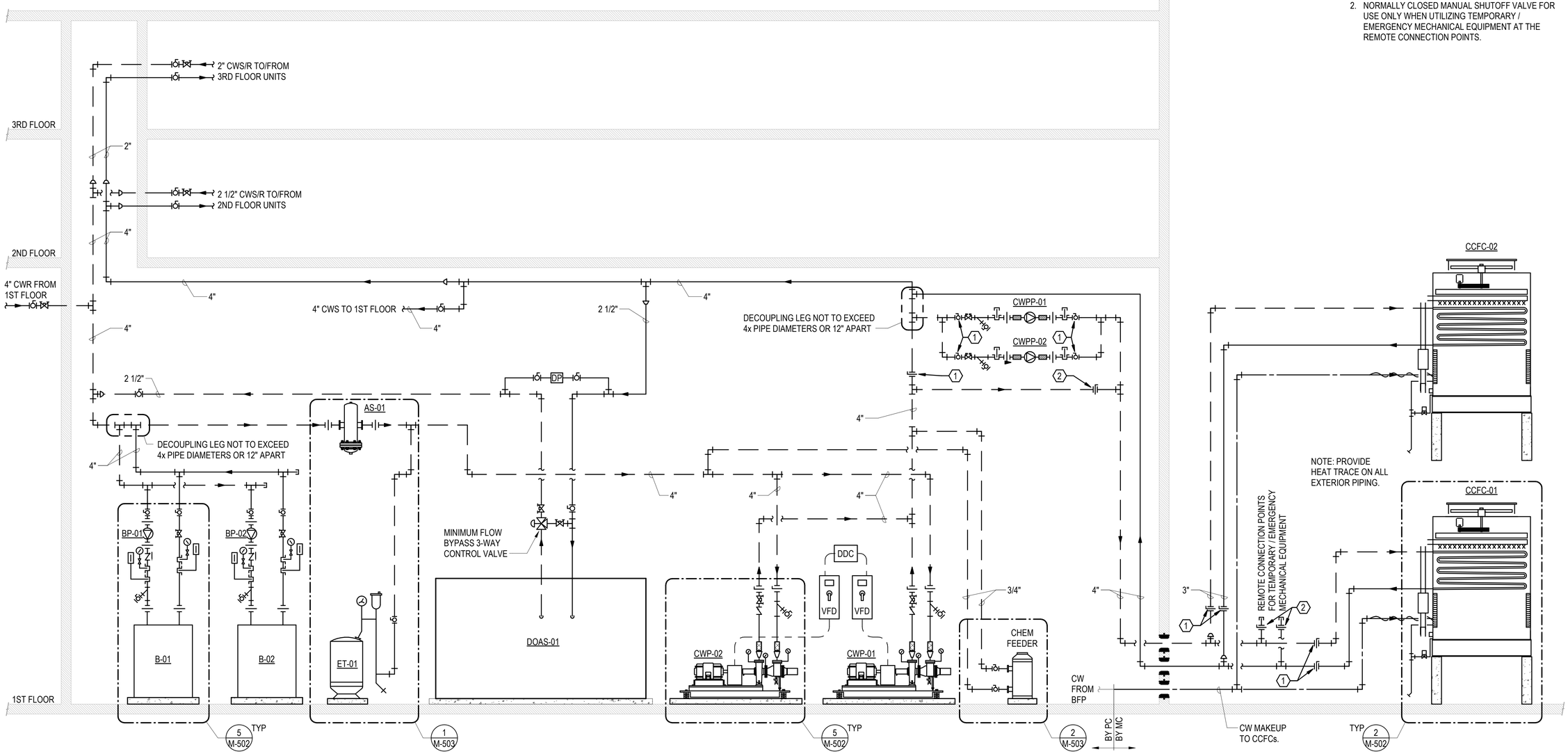

1 MECHANICAL PIPING DIAGRAM
SCALE: NTS

Michael Baker
INTERNATIONAL
12740 GRAN BAY PKWY W
SUITE 2110
JACKSONVILLE, FL 32258

Consultant

THE OFFICIAL RECORD OF THIS SHEET IS THE ELECTRONIC FILE DIGITALLY SIGNED AND SEALED UNDER RULE 61G15-23.004, F.A.C.

SEAL

NO.	DATE	DESCRIPTION

REVISIONS

FDOT

FDOT D3 OPERATIONS CENTER
CHIPLEY, FL 32428

MECHANICAL - DIAGRAMS

Project Number: 4483951-52-01
Date: 07-10-2026
Scale: AS NOTED
Sheet # M-702

© Baker 2018

PHASE IV - FINAL DESIGN SUBMITTAL 7/7/2026 11:58:54 AM

CONTROLS - GENERAL NOTES

DIAGRAMMATIC INTENT OF CONTROLS DIAGRAMS AND POINTS LIST
CONTROL POINTS, SENSORS AND DEVICES INDICATED ON THE CONTROL DRAWINGS ARE DIAGRAMMATIC IN NATURE WITH INTENT TO FULLY ILLUSTRATE THE CONTROL SYSTEM FUNCTIONALITY AND DO NOT NECESSARILY REPRESENT THE PROVIDED LOCATION OF DEVICES OR PHYSICAL WIRING BETWEEN DEVICES. CONTROL DEVICES AND POINTS SHOWN MAY BE INTEGRAL COMPONENTS OF A PROVIDED PIECE OF EQUIPMENT (BOILER, CHILLER, AIR HANDLING UNIT, ETC.) WHERE AVAILABLE EITHER AS A PHYSICALLY PROVIDED DEVICE OR VIA BACNET INTERFACE TO THE DEVICE. REFER TO CONTROL SHOP DRAWINGS AND EQUIPMENT SUBMITTALS FOR PHYSICAL LOCATION OF DEVICES AND FIELD/INTERNAL WIRING SCHEMATICS.

IN ADDITION TO THESE DRAWINGS, REFER TO PROJECT SPECIFICATIONS **23 09 23** *DIRECT DIGITAL CONTROL (DDC) FOR HVAC.*

TERMS USED WITHIN THE SEQUENCES OF OPERATION:

ADJ: ADJUSTABLE BY THE END USER, THROUGH THE SUPPLIED USER INTERFACE.

AI: ANALOG INPUT. A PHYSICAL INPUT TO THE CONTROL MODULE.

AO: ANALOG OUTPUT. A PHYSICAL OUTPUT FROM THE CONTROL MODULE.

AV: ANALOG VALUE. AN INTERMEDIATE (SOFTWARE) POINT THAT MAY BE EDITABLE OR READ-ONLY. EDITABLE AV POINTS ARE TYPICALLY USED TO ALLOW THE USER TO SET A FIXED CONTROL PARAMETER, SUCH AS A SETPOINT. READ ONLY AV POINTS ARE TYPICALLY USED TO DISPLAY THE STATUS OF A CONTROL OPERATION.

BI: BINARY INPUT. A PHYSICAL INPUT TO THE CONTROL MODULE.

BO: BINARY OUTPUT. A PHYSICAL OUTPUT FROM THE CONTROL MODULE.

BV: BINARY VALUE. AN INTERMEDIATE (SOFTWARE) POINT THAT MAY BE EDITABLE OR READ-ONLY. EDITABLE BV POINTS ARE TYPICALLY USED TO ALLOW THE USER TO SET A FIXED CONTROL PARAMETER, SUCH AS A SETPOINT. READ ONLY BV POINTS ARE TYPICALLY USED TO DISPLAY THE STATUS OF A CONTROL OPERATION.

SCHED: SCHEDULE. THE CONTROL ALGORITHM FOR THIS EQUIPMENT SHALL INCLUDE A USER EDITABLE SCHEDULE.

TREND: THE CONTROL SYSTEM SHALL BE CONFIGURED TO COLLECT AND DISPLAY A TREND LOG OF THIS OBJECT. THE TRENDING INTERVAL SHALL BE NO LESS THAN ONE SAMPLE EVERY 5 MINUTES (CHANGE OF VALUE TRENDING, WHERE A SAMPLE IS TAKEN EVERY TIME THE VALUE CHANGES BY MORE THAN A USER-DEFINED MINIMUM, IS AN ACCEPTABLE ALTERNATIVE). THE CONTROL SYSTEM SHALL BE CONFIGURED TO GENERATE AN ALARM WHEN THIS OBJECT EXCEEDS USER DEFINABLE LIMITS, AS DESCRIBED IN THE SEQUENCE OF CONTROLS.

NOTE: PROVIDE ALL OF THE ABOVE AS BACNET OBJECTS.

OCCUPANT OVERRIDE SWITCH, OR TIMED LOCAL OVERRIDE:
A CONTROL OPTION THAT ALLOWS BUILDING OCCUPANTS TO OVERRIDE THE PROGRAMMED HVAC SCHEDULE FOR A LIMITED PERIOD OF TIME.

WHEN THE OVERRIDE TIME EXPIRES, THE ZONE RETURNS TO ITS UNOCCUPIED STATE.

OCCUPANT SETPOINT ADJUSTMENT:
A CONTROL OPTION THAT ALLOWS BUILDING OCCUPANTS TO ADJUST THE HEATING AND COOLING SETPOINTS OF SELECTED ZONES, WITHIN LIMITS SET BY THE HVAC CONTROL SYSTEM. TYPICALLY THE USER INTERFACE FOR THIS FUNCTION IS BUILT INTO THE ZONE SENSOR.

OPTIMAL START-UP:
A CONTROL STRATEGY THAT AUTOMATICALLY STARTS AN HVAC SYSTEM AT THE LATEST POSSIBLE TIME YET ENSURES COMFORT CONDITIONS BY THE TIME THE BUILDING BECOMES OCCUPIED.

IN A TYPICAL IMPLEMENTATION, A CONTROLLER MEASURES THE TEMPERATURE OF THE ZONE AND THE OUTSIDE AIR. THEN, USING DESIGN HEATING OR COOLING CAPACITY AT THE DESIGN OUTSIDE AIR TEMPERATURE, THE SYSTEM COMPUTES HOW LONG A UNIT MUST RUN AT MAXIMUM CAPACITY TO BRING THE ZONE TEMPERATURE TO ITS OCCUPIED SETPOINT.

THE OPTIMAL START ALGORITHM OFTEN INCLUDES A SELF-LEARNING FEATURE TO ADJUST FOR VARIATIONS FROM DESIGN CAPACITY.

A DISTRIBUTED SYSTEM MUST USE RUN ON REQUEST WITH OPTIMAL START. (SEE BELOW.)

REQUESTED, OR RUN ON REQUEST:
A CONTROL STRATEGY THAT OPTIMIZES THE RUNTIME OF A SOURCE PIECE OF EQUIPMENT THAT SUPPLIES ONE OR MORE RECEIVING UNITS; E.G. AN AIR HANDLER UNIT SUPPLYING ZONE TERMINAL UNITS WITH HEATING, COOLING, VENTILATION, OR SIMILAR SERVICE. SOURCE EQUIPMENT RUNS ONLY WHEN NEEDED, NOT ON A FIXED SCHEDULE.

THE SOURCE EQUIPMENT RUNS WHEN ONE OR MORE RECEIVING UNITS REQUEST ITS SERVICES. AN OPERATOR DETERMINES HOW MANY REQUESTS ARE REQUIRED TO START THE SOURCE EQUIPMENT.

EXAMPLE: IF ALL THE ZONES IN A BUILDING ARE UNOCCUPIED AND THE ZONE TERMINAL UNITS DO NOT NEED HEATING OR COOLING, THE AHU WILL SHUT DOWN. HOWEVER, IF A ZONE BECOMES OCCUPIED OR NEEDS COOLING, THE TERMINAL UNIT WILL SEND A RUN REQUEST TO THE AHU TO INITIATE THE START-UP SEQUENCE. IF THIS AHU DEPENDS ON A CENTRAL CHILLER, IT CAN SEND A RUN REQUEST TO THE CHILLER.

THE RUN ON REQUEST ALGORITHM ALSO ALLOWS AN OPERATOR TO SCHEDULE OCCUPANCY FOR INDIVIDUAL ZONES BASED ON THE NEEDS OF THE OCCUPANTS WITHOUT HAVING TO ADJUST THE SCHEDULES OF RELATED AHUS AND CHILLERS.

TRIM AND RESPOND, OR SETPOINT OPTIMIZATION:
A CONTROL STRATEGY THAT OPTIMIZES THE SETPOINT OF A SOURCE PIECE OF EQUIPMENT THAT SUPPLIES ONE OR MORE RECEIVING UNITS; E.G. AN AIR HANDLER UNIT SUPPLYING ZONE TERMINAL UNITS WITH HEATING, COOLING, VENTILATION, OR SIMILAR SERVICE.

THE SOURCE UNIT COMMUNICATES WITH RECEIVING UNITS TO DETERMINE HEATING, COOLING, AND OTHER REQUIREMENTS, AND THEN ADJUSTS ITS SETPOINT.

EXAMPLE: IF ALL ZONES ARE COMFORTABLE AND DO NOT REQUEST COOLING, THE AHU WILL GRADUALLY INCREASE (TRIM) ITS SUPPLY AIR SETPOINT. WHEN A ZONE REQUESTS COOLING, THE AHU RESPONDS BY DROPPING ITS SETPOINT. THE MORE ZONES THAT REQUEST COOLING, THE MORE IT DROPS THE SETPOINT. THE AHU REPEATS THIS PROCESS THROUGHOUT THE DAY TO KEEP ZONES COOL, BUT WITH A SUPPLY AIR SETPOINT THAT IS NO COOLER THAN NECESSARY.

INTERFACE
THE PHYSICAL DEVICE REQUIRED TO PROVIDE INTEGRATION CAPABILITIES FROM AN EQUIPMENT VENDOR'S PRODUCT TO THE CONTROL SYSTEM. THE EQUIPMENT VENDOR MOST NORMALLY FURNISHES THE INTERFACE DEVICE. AN EXAMPLE OF AN INTERFACE IS THE CHILLED WATER TEMPERATURE RESET INTERFACE CARD PROVIDED BY THE CHILLER MANUFACTURER IN ORDER TO ALLOW THE CONTROL SYSTEM TO INTEGRATE THE CHILLED WATER TEMPERATURE RESET FUNCTION INTO THE CONTROL SYSTEM.

INTEGRATE
THE PHYSICAL CONNECTIONS FROM A CONTROL SYSTEM TO ALL SPECIFIED EQUIPMENT THROUGH AN INTERFACE AS REQUIRED TO ALLOW THE SPECIFIED CONTROL AND MONITORING FUNCTIONS OF THE EQUIPMENT TO BE PERFORMED VIA THE CONTROL SYSTEM.

OCCUPANCY
THE BUILDING OCCUPANCY SCHEDULE AS PROGRAMMED INTO THE DDC SYSTEM SHALL BE COORDINATED WITH THE USER. BUILDING OCCUPANCY TIMES SHALL BE ADJUSTABLE.

TYPICAL OPERATION: THE BUILDING IS EXPECTED TO BE OCCUPIED 8 HOURS PER DAY, 5 DAYS PER WEEK.

EMERGENCY OPERATION: THE BUILDING IS EXPECTED TO BE OCCUPIED 24 HOURS PER DAY FOR A PERIOD OF UP TO 72 HOURS.

EMERGENCY OPERATIONS MODE SEQUENCE OF OPERATIONS OVERRIDES
UPON FAILURE OF A SINGLE CCFC OR BOILER, THE REMAINDER OF THE SYSTEM COMPONENTS WILL CONTINUE NORMAL OPERATION UNTIL CONDENSER WATER LOOP TEMPERATURES CANNOT BE MAINTAINED.

UPON CONDENSER WATER LOOP HIGH TEMPERATURE OR LOW TEMPERATURE ALARM BEING GENERATED FOR 2 MINUTES (ADJ), THROUGH THE DDC SYSTEM FRONT END OR LOCAL WORKSTATION, OR UPON INPUT FROM THE USERS IN THE EOC SPACE, THE BAS WILL ENTER EMERGENCY OPERATIONS MODE.

DURING EMERGENCY OPERATIONS MODE THE DDC SYSTEM WILL PRIORITIZE EQUIPMENT SERVING THE EOC AREAS AND OTHER MISSION CRITICAL EQUIPMENT. IF THE MISSION CRITICAL EQUIPMENT CANNOT ACHIEVE DESIGN OPERATION (I.E. CANNOT MEET SPACE SETPOINT), NON-ESSENTIAL EQUIPMENT WILL BE DE-ENERGIZED, STARTING WITH THE EQUIPMENT WITH THE LEAST RUNTIME IN THE PAST 30 DAYS (ADJ), UNTIL LOOP TEMPERATURE IS MAINTAINED FOR 5 MINUTES (ADJ).

THE SYSTEM WILL CONTINUE TO OPERATE IN "EMERGENCY OPERATIONS MODE" UNTIL MANUALLY RESET WITHIN THE CONTROLS FRONT END.

REFER TO EQUIPMENT SEQUENCES OF OPERATION FOR "EMERGENCY OPERATIONS MODE" CONTROL OF EQUIPMENT TYPES. REFER TO EQUIPMENT SCHEDULES FOR EQUIPMENT IDENTIFIED AS MISSION CRITICAL.

EMERGENCY OPERATIONS MODE MUST NOT BE UTILIZED FOR ANY MAINTENANCE ACTIVITY OR FOR CONVENIENCE PURPOSES.

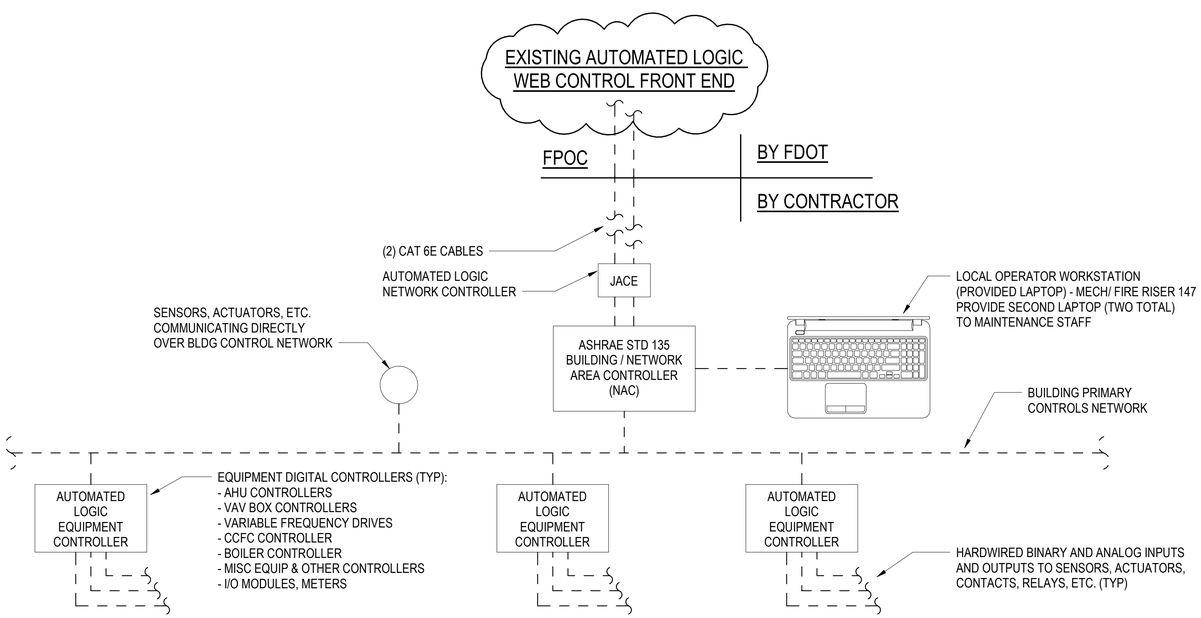

CONTROLS - SUGGESTED SYSTEM ARCHITECTURE DIAGRAM

CONTROLS INDEX

M-801
GENERAL NOTES AND SYSTEM ARCHITECTURE
M-802
ELECTRIC METER CONTROL DIAGRAM
WATER FLOW METER CONTROL DIAGRAM
HEAT TRACE CONTROL DIAGRAM
M-803
OUTSIDE AIR CONDITIONS CONTROL DIAGRAM
VARIABLE FREQUENCY DRIVE (VFD)
FIRE ALARM SYSTEM CONTROL DIAGRAMS
M-804
CONDENSER WATER LOOP, BOILER, AND CLOSED CIRCUIT FLUID COOLER CONTROL DIAGRAM
M-805
CONDENSER WATER LOOP, BOILER, AND CLOSED CIRCUIT FLUID COOLER SEQUENCE OF OPERATIONS AND POINTS LIST
M-806
VARIABLE AIR VOLUME (VAV) TERMINAL BOX CONTROL DIAGRAM
SPLIT DX AIR CONDITIONER/HEAT PUMP - CONTROL DIAGRAM
WATER SOURCE HEAT PUMP CONTROL DIAGRAM
M-807
CRAC-01 CONTROL DIAGRAM
M-808
DOAS-01 CONTROL DIAGRAM
M-809
DOAS-01 SEQUENCE OF OPERATION AND POINTS LIST

CONTROL DIAGRAM SYMBOLS

M	MOTOR
CT CS	CURRENT TRANSMITTER (CT=AI) / CURRENT SENSOR (CS=BI)
STR	MOTOR STARTER
VFD	VARIABLE FREQUENCY DRIVE
SCR	SILICON CONTROLLED RECTIFIER
	[E]XHAUST FAN; [R]ETURN FAN; [S]UPPLY FAN; [T]RANSFER FAN, ETC.
	AIRFLOW MEASUREMENT STATION
	AIR FILTER
H L	DIFFERENTIAL PRESSURE SENSOR WITH HIGH AND LOW
M M NC NO	MOTORIZED DAMPER W/ACTUATOR NC=NORMALLY CLOSED NO=NORMALLY OPEN
	DAMPER STATUS SWITCH
M	VAV / TERMINAL BOX DAMPER
BDD	BACKDRAFT DAMPER
T	DUCT FREEZE STAT
H	DUCT HUMIDITY SENSOR
T	DUCT TEMPERATURE SENSOR
S	DUCT SMOKE DETECTOR
P-##	PUMP
	WATER FLOW DIRECTION (PIPING)
	WATER FLOW SENSOR (PIPING)
	WATER FLOW METER (PIPING)
T	WATER TEMPERATURE SENSOR (PIPING)
	CONTROL VALVE WITH MOTORIZED OPERATOR - 2 WAY
	CONTROL VALVE WITH MOTORIZED OPERATOR - 3 WAY
H	ROOM HUMIDITY SENSOR
TS	ROOM TEMPERATURE SENSOR
T	ROOM THERMOSTAT
OAT	OUTDOOR AIR TEMP SENSOR

Michael Baker INTERNATIONAL
12740 GRAN BAY PKWY W
SUITE 2110
JACKSONVILLE, FL 32258

Consultant

THE OFFICIAL RECORD OF THIS SHEET IS THE ELECTRONIC FILE DIGITALLY SIGNED AND SEALED UNDER RULE 61G15-23.004, F.A.C.

SEAL

NO.	DATE	DESCRIPTION

REVISIONS

FDOT

FDOT D3 OPERATIONS CENTER
CHIPLEY, FL 32428

MECHANICAL - CONTROLS

Project Number: 4483951-52-01
Date: 07-10-2026
Scale: AS NOTED
Sheet # M-801

PHASE IV - FINAL DESIGN SUBMITTAL 7/7/2026 11:58:55 AM

© Baker 2018

ELECTRIC METER SEQUENCE OF OPERATION:

THE CONTROLLER SHALL MONITOR THE ELECTRIC METER FOR ELECTRIC CONSUMPTION ON A CONTINUAL BASIS. THESE VALUES SHALL BE MADE AVAILABLE TO THE SYSTEM AT ALL TIMES.

ALARM SHALL BE GENERATED AS FOLLOWS:
- METER FAILURE: SENSOR READING INDICATES A LOSS OF PULSE OUTPUT FROM THE ELECTRIC METER.

PEAK DEMAND HISTORY:
THE CONTROLLER SHALL MONITOR AND RECORD THE PEAK (HIGH AND LOW) DEMAND READINGS FROM THE ELECTRIC METER. PEAK READINGS SHALL BE RECORDED ON A DAILY, MONTH-TO-DATE, AND YEAR-TO-DATE BASIS.

USAGE HISTORY:
THE CONTROLLER SHALL MONITOR AND RECORD ELECTRIC METER READINGS SO AS TO PROVIDE A POWER CONSUMPTION HISTORY. USAGE READINGS SHALL BE RECORDED ON A DAILY, MONTH-TO-DATE, AND YEAR-TO-DATE BASIS.

NOTE: THIS METER IS SEPARATE AND DISTINCT FROM THE METER INDICATED ON THE ELECTRICAL DRAWINGS. ATC SUB-CONTRACTOR TO PROVIDE. OMIT THIS METER IF THE UTILITY-PROVIDED ELECTRIC METER CAN PROVIDE SIGNAL TO THE DDC SYSTEM.

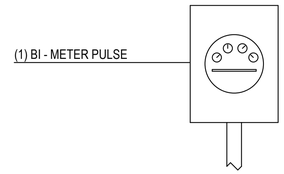

1 ELECTRIC METER CONTROL DIAGRAM
SCALE: NTS

ELECTRIC METER - SYSTEM POINT LIST

POINT NUMBER	SYSTEM POINT DESCRIPTION: ELECTRIC METER	SHOW ON DISPLAY	HARDWARE POINTS – ANALOG – INPUT (AI)	ANALOG – OUTPUT (AO)	DIGITAL (BINARY) – INPUT (BI): PULSE	DIGITAL (BINARY) – OUTPUT (BO)	SYSTEM FEATURES /SOFTWARE POINTS – PROGRAMS: (AV) ANALOG VALUE	PROGRAMS: (BV) BINARY VALUE	PROGRAMS: TREND	ALARMS: COMM. FAIL	ALARMS: LEVEL EXCEEDED	NOTES
	DDC CONTROL PANEL									●		
1	PULSE INPUT	●			●							
2	CURRENT DEMAND LEVEL	●					●		●			
3	kW DEMAND	●							●			
4	kW PEAK MONTH-TO-DATE	●							●			
5	kW PEAK TODAY	●							●			
6	kW PEAK YEAR-TO-DATE	●							●			
7	kWh TODAY	●							●			
8	MWh MONTH-TO-DATE	●							●			
9	MWh YEAR-TO-DATE	●							●			
10	DEMAND LEVEL 1	●									●	
11	DEMAND LEVEL 2	●									●	
12	DEMAND LEVEL 3	●									●	
13	METER FAILURE	●								●		
14	RESERVED FOR FUTURE											
15	RESERVED FOR FUTURE											

WATER FLOW METER SEQUENCE OF OPERATION:

WATER METER:
THE CONTROLLER SHALL MONITOR THE WATER METER FOR WATER CONSUMPTION ON A CONTINUAL BASIS. THESE VALUES SHALL BE MADE AVAILABLE TO THE SYSTEM AT ALL TIMES.

ALARM SHALL BE GENERATED AS FOLLOWS:
- METER FAILURE: SENSOR READING INDICATES A LOSS OF PULSE OUTPUT FROM THE WATER METER.

PEAK DEMAND HISTORY:
THE CONTROLLER SHALL MONITOR AND RECORD THE PEAK (HIGH AND LOW) DEMAND READINGS FROM THE WATER METER. THESE READINGS SHALL BE RECORDED ON A DAILY, MONTH-TO-DATE, AND YEAR-TO-DATE BASIS.

USAGE HISTORY:
THE CONTROLLER SHALL MONITOR AND RECORD WATER METER READINGS SO AS TO PROVIDE A WATER CONSUMPTION HISTORY. USAGE READINGS SHALL BE RECORDED ON A DAILY, MONTH-TO-DATE, AND YEAR-TO-DATE BASIS.

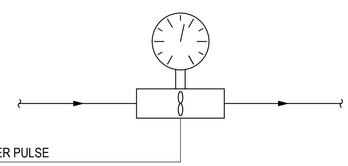

2 WATER FLOW METER CONTROL DIAGRAM
SCALE: NTS

WATER METER - SYSTEM POINT LIST

POINT NUMBER	SYSTEM POINT DESCRIPTION: WATER METER	SHOW ON DISPLAY	HARDWARE POINTS – ANALOG – INPUT (AI)	ANALOG – OUTPUT (AO)	DIGITAL (BINARY) – INPUT (BI): PULSE	DIGITAL (BINARY) – OUTPUT (BO)	SYSTEM FEATURES /SOFTWARE POINTS – PROGRAMS: (AV) ANALOG VALUE	PROGRAMS: (BV) BINARY VALUE	PROGRAMS: TREND	ALARMS: COMM. FAIL	NOTES
	DDC CONTROL PANEL								●	●	
1	PULSE INPUT	●			●						
2	CURRENT DEMAND LEVEL	●					●		●		
3	DEMAND	●							●		
4	PEAK MONTH-TO-DATE	●							●		
5	PEAK TODAY	●							●		
6	PEAK YEAR-TO-DATE	●							●		
7	USAGE TODAY	●							●		
8	USAGE MONTH-TO-DATE	●							●		
9	USAGE YEAR-TO-DATE	●							●		
10	METER FAILURE	●								●	
11	RESERVED FOR FUTURE										
12	RESERVED FOR FUTURE										

HEAT TRACE - SEQUENCE OF OPERATION
- UPON DROP IN PIPE SURFACE TEMPERATURE TO 35°F (ADJ), HEAT TRACE TO ACTIVATE. UPON RISE IN PIPE SURFACE TEMPERATURE ABOVE 38°F (ADJ), HEAT TRACE TO DEACTIVE. HEAT TRACE CABLE TO BE SELF-REGULATING TYPE, MODULATING OUTPUT TO KEEP PIPE SURFACE TEMPERATURE ABOVE 35°F (ADJ).
-
- HEAT TRACE CONTROLLER TO MONITOR SYSTEM STATUS AND SEND TO DDC SYSTEM. UPON LOSS OF POWER TO HEAT TRACE CABLE, ALARM TO BE SENT TO HEAT TRACE CONTROLLER AND DDC SYSTEM.

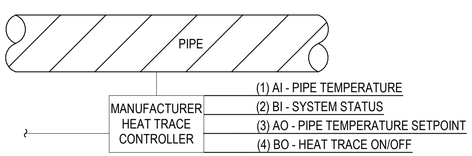

3 HEAT TRACE CONTROL DIAGRAM
SCALE: NTS

HEAT TRACE SYSTEM POINT LIST

POINT NUMBER	SYSTEM POINT DESCRIPTION: HEAT TRACE	SHOW ON DISPLAY	ANALOG – INPUT (AI): TEMPERATURE	ANALOG – OUTPUT(AO): TEMPERATURE	DIGITAL (BINARY) – INPUT (BI): STATUS	DIGITAL (BINARY) – OUTPUT (BO): ON / OFF	SYSTEM FEATURES – ALARMS: FAILURE	PROGRAMS: TREND	NOTES
01	PIPE TEMPERATURE	●	●					●	
02	SYSTEM STATUS	●			●		●	●	
03	PIPE TEMPERATURE SETPOINT	●		●				●	
04	HEAT TRACE ON / OFF	●				●			
##	RESERVED FOR FUTURE								

Michael Baker INTERNATIONAL
12740 GRAN BAY PKWY W
SUITE 2110
JACKSONVILLE, FL 32258

Consultant

THE OFFICIAL RECORD OF THIS SHEET IS THE ELECTRONIC FILE DIGITALLY SIGNED AND SEALED UNDER RULE 61G15-23.004, F.A.C.

SEAL

REVISIONS

NO.	DATE	DESCRIPTION

FDOT

FDOT D3 OPERATIONS CENTER
CHIPLEY, FL 32428

MECHANICAL - CONTROLS

PHASE IV - FINAL DESIGN SUBMITTAL 7/7/2026 11:58:56 AM

Project Number: 4483951-52-01
Date: 07-10-2026
Scale: AS NOTED
Sheet # M-802

© Baker 2018

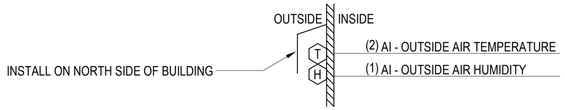

OUTDOOR AIR CONDITIONS SEQUENCE OF OPERATION:

THE CONTROLLER SHALL MONITOR THE OUTSIDE AIR TEMPERATURE AND HUMIDITY AND CALCULATE THE OUTSIDE AIR ENTHALPY ON A CONTINUAL BASIS. THESE VALUES SHALL BE MADE AVAILABLE TO THE SYSTEM AT ALL TIMES.

ALARM SHALL BE GENERATED AS FOLLOWS:

- SENSOR FAILURE: SENSOR READING INDICATES SHORTENED OR DISCONNECTED SENSOR. IN THE EVENT OF A SENSOR FAILURE, AN ALTERNATE OUTSIDE AIR CONDITIONS SENSOR (SUCH AS AHU OA SENSOR) SHALL BE MADE AVAILABLE TO THE SYSTEM WITHOUT INTERRUPTION IN SENSOR READINGS.

IF NO OA TEMP SENSOR CAN BE READ, A DEFAULT VALUE OF 65°F WILL BE USED.

IF NO OA HUMIDITY SENSOR CAN BE READ, A DEFAULT VALUE OF 50% WILL BE USED.

OUTSIDE AIR TEMPERATURE HISTORY:
THE CONTROLLER SHALL MONITOR AND RECORD THE HIGH AND LOW TEMPERATURE READINGS FOR THE OUTSIDE AIR. THESE READINGS SHALL BE RECORDED ON A DAILY, MONTH-TO-DATE, AND YEAR-TO-DATE BASIS.

OUTDOOR AIR CONDITIONS POINT LIST

POINT NUMBER	SYSTEM POINT DESCRIPTION	SHOW ON DISPLAY	HARDWARE POINTS																SYSTEM FEATURES /SOFTWARE POINTS							NOTES
			ANALOG								DIGITAL (BINARY)								PROGRAMS				ALARMS			
			INPUT (AI)				OUTPUT (AO)				INPUT (BI)				OUTPUT (BO)											
	OUTDOOR AIR CONDITIONS																		(AV) ANALOG VALUE	(BV) BINARY VALUE	TREND		FAILURE			
01	OUTSIDE AIR HUMIDITY	●	●																		●					
02	OUTSIDE AIR TEMP	●	●																		●					
03	OUTSIDE AIR ENTHALPY	●																	●		●					
04	SENSOR FAILURE																						●			
-	-																									
##	RESERVED FOR FUTURE																									

1 OUTSIDE AIR CONDITIONS CONTROL DIAGRAM

SCALE: NTS

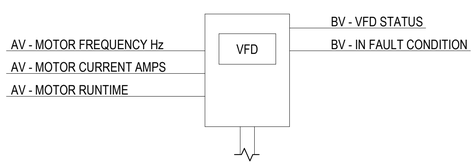

VARIABLE FREQUENCY DRIVE INTERFACE

VARIABLE FREQUENCY DRIVE (VFD) INTERFACE MONITOR:
CURRENT VFD STATUS AND OPERATING CONDITIONS SHALL BE MONITORED THROUGH ITS COMMUNICATIONS INTERFACE PORT. THE INTERFACE SHALL MONITOR AND TREND THE POINTS AS SHOWN ON THE POINTS LIST.

VARIABLE FREQUENCY DRIVE POINTS LIST

POINT NUMBER	SYSTEM POINT DESCRIPTION	SHOW ON DISPLAY	HARDWARE POINTS																SYSTEM FEATURES /SOFTWARE POINTS							NOTES
			ANALOG								DIGITAL (BINARY)								PROGRAMS				ALARMS			
			INPUT (AI)				OUTPUT (AO)				INPUT (BI)				OUTPUT (BO)											
	VARIABLE FREQUENCY DRIVE																		(AV) ANALOG VALUE	(BV) BINARY VALUE	TREND		GENERAL/STATUS			
01	MOTOR CURRENT AMPS	●																	●		●					
02	MOTOR FREQUENCY HERTZ	●																	●		●					
03	MOTOR RUNTIME	●																	●							
04	IN FAULT CONDITION	●																		●	●		●			
05	VFD STATUS	●																		●	●		●			
-	-																									
##	RESERVED FOR FUTURE																									

2 VARIABLE FREQUENCY DRIVE (VFD)

SCALE: NTS

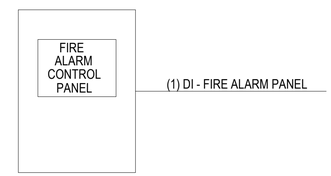

FIRE ALARM SEQUENCE OF OPERATION:

THE CONTROLLER SHALL MONITOR FIRE ALARM. CONNECT TO RELAY MODULE.

UPON ACTIVATION OF FIRE ALARM SYSTEM THE FOLLOWING SHALL OCCUR WITHIN 30 SECONDS:

- ALL FANS SHALL SHUTDOWN
- ALL OUTDOOR AIR DAMPERS SHALL CLOSE
- ALL EXHAUST DAMPERS SHALL CLOSE
- AN ALARM SHALL BE GENERATED

SYSTEM SHALL SHUTDOWN AND DAMPERS SHALL CLOSE REGARDLESS OF THE POSITION OF HAND-OFF-AUTO SWITCHES.

FIRE ALARM SYSTEM

POINT NUMBER	SYSTEM POINT DESCRIPTION	SHOW ON DISPLAY	HARDWARE POINTS																SYSTEM FEATURES /SOFTWARE POINTS							NOTES
			ANALOG								DIGITAL (BINARY)								PROGRAMS				ALARMS			
			INPUT (AI)				OUTPUT (AO)				INPUT (BI)				OUTPUT (BO)											
	FIRE ALARM SYSTEM										STATUS ON/OFF								(AV) ANALOG VALUE	(BV) BINARY VALUE	TREND		ACTIVATION			
01	FIRE ALARM PANEL	●									●												●			
-	-																									
##	RESERVED FOR FUTURE																									

3 FIRE ALARM SYSTEM CONTROL DIAGRAMS

SCALE: NTS

Michael Baker
INTERNATIONAL
12740 GRAN BAY PKWY W
SUITE 2110
JACKSONVILLE, FL 32258

Consultant

THE OFFICIAL RECORD OF THIS SHEET IS THE ELECTRONIC FILE DIGITALLY SIGNED AND SEALED UNDER RULE 61G15-23.004, F.A.C.

SEAL

NO.	DATE	DESCRIPTION

REVISIONS

FDOT

FDOT D3 OPERATIONS CENTER
CHIPLEY, FL 32428

MECHANICAL - CONTROLS

Project Number: 4483951-52-01

Date: 07-10-2026

Scale: AS NOTED

Sheet # M-803

© Baker 2018

PHASE IV - FINAL DESIGN SUBMITTAL 7/7/2026 11:58:56 AM

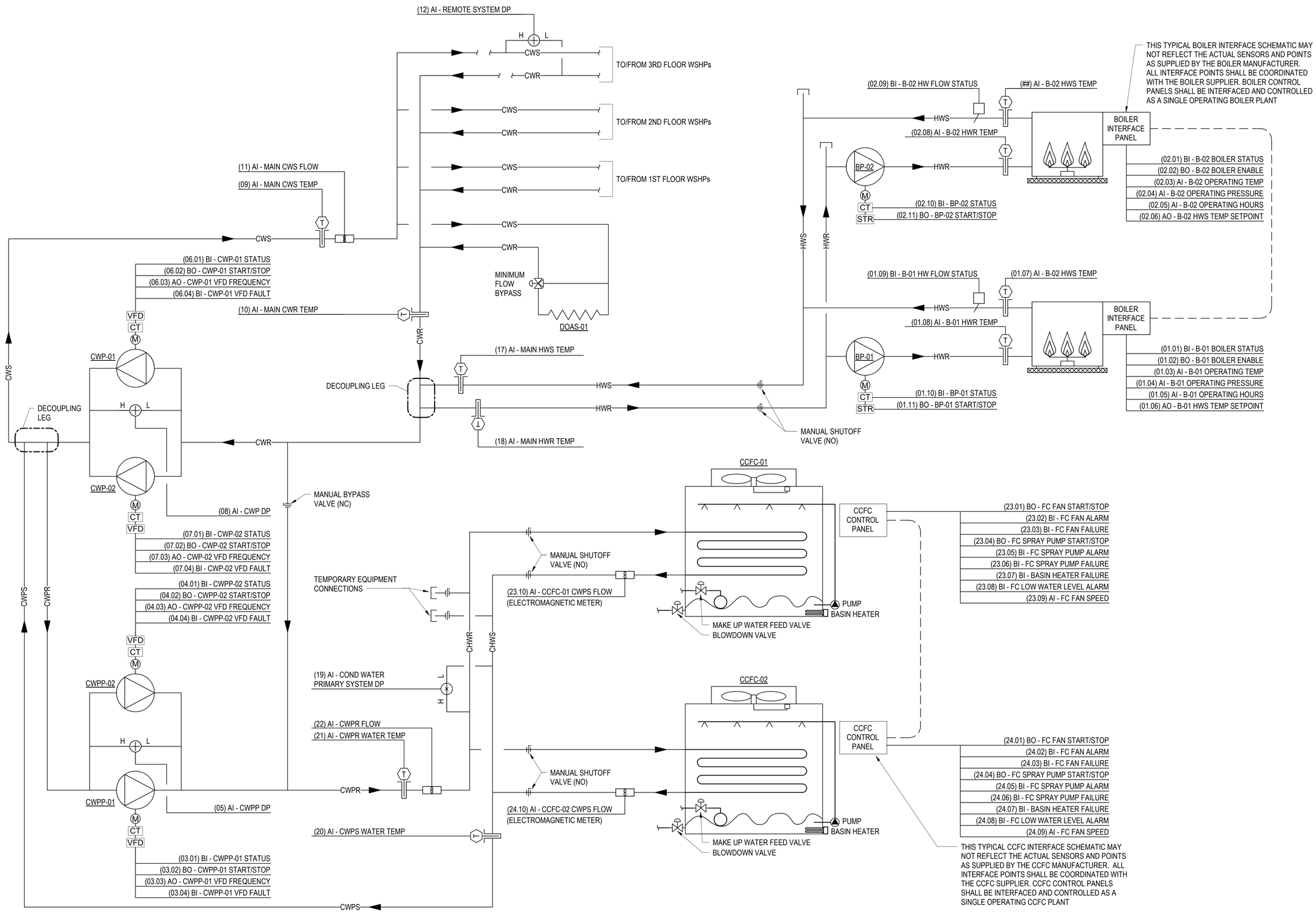

1 CONDENSER WATER LOOP, BOILER, AND CLOSED CIRCUIT FLUID COOLER CONTROL DIAGRAM

SCALE: 12" = 1'-0"

Michael Baker INTERNATIONAL
12740 GRAN BAY PKWY W
SUITE 2110
JACKSONVILLE, FL 32258

Consultant

THE OFFICIAL RECORD OF THIS SHEET IS THE ELECTRONIC FILE DIGITALLY SIGNED AND SEALED UNDER RULE 61G15-23.004, F.A.C.

SEAL

REVISIONS

NO.	DATE	DESCRIPTION

FDOT

FDOT D3 OPERATIONS CENTER
CHIPLEY, FL 32428

MECHANICAL - CONTROLS

Project Number: 4483951-52-01

Date: 07-10-2026

Scale: AS NOTED

Sheet # M-804

PHASE IV - FINAL DESIGN SUBMITTAL

7/7/2026 11:58:57 AM

© Baker 2018

CONDENSER WATER LOOP SYSTEM - SEQUENCE OF OPERATIONS:

CONDENSER WATER LOOP AND SECONDARY PUMPS
CLOSED CIRCUIT FLUID COOLER AND CHILLED WATER PRIMARY PUMPS
BOILER AND HEATING HOT WATER PRIMARY PUMPS

CONDENSER WATER LOOP AND SECONDARY PUMPS:

- THE BUILDING MANAGEMENT SYSTEM WILL ENERGIZE THE CLOSED CIRCUIT FLUID COOLERS (CCFC) AND BOILERS TO MAINTAIN THE CONDENSER WATER LOOP BETWEEN 60-90 °F (ADJ) AS DESCRIBED BELOW.
- THE OPERATING (DUTY) SECONDARY PUMP VFD SHALL MODULATE THE PUMP SPEED TO MAINTAIN THE DIFFERENTIAL PRESSURE (DP) AS MEASURED AT THE REMOTE SYSTEM DP SENSOR. DP SETPOINT WILL BE AS DETERMINED / RECOMMENDED BY TAB AGENT TO ACHIEVE SYSTEM BALANCING.
- MINIMUM SYSTEM FLOW SHALL BE BASED UPON MINIMUM PERMISSIBLE VFD SPEED AS INDICATED BY THE VFD MANUFACTURER'S IOM. MINIMUM FLOW PROVISIONS SHALL BE ACHIEVED BY THE 3-WAY VALVE INSTALLED IN THE SECONDARY PIPING SYSTEM.
- EMERGENCY OPERATIONS MODE:
  - UPON FAILURE OF A SINGLE CCFC OR BOILER, CWP-01/02 WILL CONTINUE NORMAL OPERATION.
  - WHEN TEMPORARY EQUIPMENT IS CONNECTED TO THE HYDRONIC SYSTEM, CWP-01/02 WILL OPERATE NORMALLY TO DELIVER CONDENSER WATER TO THE HYDRONIC EQUIPMENT.

CLOSED CIRCUIT FLUID COOLER AND CONDENSER WATER PRIMARY PUMPS:

- UPON A RISE IN LOOP TEMPERATURE ABOVE 87 °F (ADJ), THE CCFCs WILL OPERATE IN A LEAD/LAG ARRANGEMENT AS DEEMED MOST EFFICIENT BY THE BAS AND/OR UNIT MANUFACTURER'S CONTROLS.
- PROVIDE CONTROLLER FROM CCFC MANUFACTURER TO CONTROL CCFC-01 AND CCFC-02 AND ASSOCIATED CONDENSER WATER PRIMARY PUMPS (CWPP-01 AND CWPP-02); PROVIDE COMPLETE ALARM AND COMMUNICATION FUNCTIONS TO DDC SYSTEM.
- CCFCs MANUFACTURER'S CONTROLS MUST INITIATE FC FAN START/STOP AND FC SPRAY PUMP START/STOP TO MAINTAIN A MAXIMUM TEMPERATURE OF 90 °F (ADJ) IN THE CONDENSER SUPPLY WATER LEAVING THE MECHANICAL ROOM AND BEING PROVIDED TO THE HYDRONIC EQUIPMENT.
- THE OPERATING (DUTY) PRIMARY PUMP VFD SHALL MODULATE THE PUMP SPEED TO MAINTAIN THE DIFFERENTIAL PRESSURE (DP) AS MEASURED AT THE PRIMARY LOOP DP SENSOR. DP SETPOINT WILL BE AS DETERMINED / RECOMMENDED BY TAB AGENT TO ACHIEVE SYSTEM BALANCING. ONCE THE DUTY PUMP REACHES FULL SPEED, THE LAG PUMP MUST BE ENABLED AND WILL MODULATE TO MAINTAIN DIFFERENTIAL PRESSURE (DP) AS MEASURED AT THE PRIMARY LOOP DP SENSOR.
- EMERGENCY OPERATIONS MODE:
  - UPON FAILURE OF A SINGLE CCFC, THE REMAINING OPERATIONAL CCFC AND CONDENSER WATER PRIMARY PUMPS WILL CONTINUE NORMAL OPERATION.
  - WHEN TEMPORARY EQUIPMENT IS CONNECTED TO THE HYDRONIC SYSTEM, CCFC-01/02 AND CWPP-01/02 MUST BE DEENERGIZED, THE MANUAL SHUTOFF VALVES AT THE PUMPS MUST BE CLOSED, AND THE MANUAL BYPASS VALVE MUST BE OPENED.

BOILER AND HEATING HOT WATER PRIMARY PUMPS:

- UPON A FALL IN LOOP TEMPERATURE BELOW 63°F (ADJ), THE THE BOILERS AND CIRCULTION PUMPS WILL OPERATE IN A LEAD/LAG ARRANGEMENT AS DEEMED MOST EFFICIENT BY THE BAS AND/OR UNIT MANUFACTURER'S CONTROLS.
- PROVIDE BOILER CONTROLLER FROM BOILER MANUFACTURER TO CONTROL BOILERS B-01 AND B-02 AND ASSOCIATED BOILER CIRCULATION PUMPS (BP-01 AND BP-02); PROVIDE COMPLETE ALARM AND COMMUNICATION FUNCTIONS TO DDC SYSTEM.
- BOILERS SHALL STAGE/MODULATE BY BOILER CONTROLLER AS REQUIRED TO MAINTAIN A MINIMUM TEMPERATURE OF 60 °F (ADJ) IN THE CONDENSER SUPPLY WATER LEAVING THE MECHANICAL ROOM AND BEING PROVIDED TO THE HYDRONIC EQUIPMENT.
- EMERGENCY OPERATIONS MODE:
  - UPON FAILURE OF A SINGLE BOILER, THE REMAINING OPERTAIONAL BOILER AND PUMP WILL CONTINUE NORMAL OPERATION
  - WHEN TEMPORARY EQUIPMENT IS CONNECTED TO THE HYDRONIC SYSTEM, B-01/02 AND BP-01/02 MUST BE DEENERGIZED, THE MANUAL SHUTOFF VALVES IN THE HWS/R HEADERS MUST BE CLOSED. IF ONLY TEMPORARY HEAT REJECTION EQUIPMENT (I.E. TEMPORARY COOLING TOWERS OR CHILLERS), B-01/02 AND BP-01/02 MUST CONTINUE NORMAL OPERATION.

ALARMS AND SYSTEM MONITORING:

- PROVIDE ALARMS FOR ALL PUMPS AS INDICATED ON THE POINTS LIST AND AS FOLLOWS:
  - PUMP FAILURE: COMMANDED ON, BUT STATUS IS OFF.
  - PUMP RUNNING IN HAND; COMMANDED OFF, BUT STATUS IS ON.
  - PUMP RUNTIME EXCEEDED; STATUS RUNTIME EXCEEDS 168 HOURS (ADJ)
  - HIGH SYSTEM PRESSURE IF REMOTE DP SENSOR IS 25% (ADJ) ABOVE SETPOINT.
  - LOW SYSTEM PRESSURE IF REMOTE DP SENSOR IS 25% (ADJ) BELOW SETPOINT.
- HOT WATER:
  - SUPPLY TEMP GREATER THAN 160°F (ADJ).
  - RETURN TEMP LESS THAN 100° OR 15° BELOW SUPPLY WATER TEMPERATURE (WHICHEVER IS LOWER TO ACCOUNT FOR HW RESET) (ADJ)
- CONDENSER WATER PRIMARY LOOP:
  - SUPPLY TEMP LESS THAN 50°F (ADJ).
  - RETURN TEMP GREATER THAN 95° OR 15° ABOVE SUPPLY WATER TEMPERATURE (WHICHEVER IS LOWER TO ACCOUNT FOR CWP RESET) (ADJ)
- CONDENSER WATER:
  - SUPPLY TEMP LESS THAN 60°F (ADJ).
  - RETURN TEMP GREATER THAN 95° OR 15° ABOVE SUPPLY WATER TEMPERATURE (ADJ)
- SYSTEM MONITORING POINTS SHALL BE AS INDICATED ON THE POINTS LIST, INCLUDING BUT NOT LIMITED TO THE FOLLOWING:
  - SECONDARY CWS FLOWRATE
  - SECONDARY CWS/R TEMPERATURES
  - DIFFERENTIAL PRESSURE ACROSS SECONDARY PUMPS
  - BOILER AND CCFC FAILURE ALARMS NOT OTHERWISE INDICATED BUT PROVIDED WITH EQUIPMENT CONTROLLER / BACNET INTERFACE.

WATER LOOP POINTS LIST

POINT NUMBER	SYSTEM POINT DESCRIPTION	SHOW ON DISPLAY	HARDWARE POINTS (SEE NOTE 4)														SYSTEM FEATURES /SOFTWARE POINTS										NOTES
			ANALOG								DIGITAL (BINARY)																
			INPUT (AI)				OUTPUT (AO)				INPUT (BI)				OUTPUT (BO)		PROGRAMS					ALARMS					
			TEMPERATURE	PRESSURE	FREQUENCY	FLOWRATE (GPM)	INFO	SETPOINT ADJ	% OPEN/CLOSE	FREQUENCY	TEMPERATURE	STATUS ON/OFF	FLOW STATUS	STATUS (FAULT)	LOW LEVEL	OFF/ON (ENABLE)	START / STOP		TREND	(AV) ANALOG VALUE	TIME SCHEDULING	ALARM INSTRUCT	RUN TIME	HIGH ANALOG	LOW ANALOG	SENSOR FAIL	FLOW FAIL	COMM. FAIL	
	DDC CONTROL PANEL																				●	●	●						
01.01	B-01, BOILER STATUS	●									●								●										3
01.02	B-01, BOILER ENABLE														●				●										3
01.03	B-01, OPERATING TEMP		●																●					●	●				3
01.04	B-01, OPERATING PRESSURE			●															●					●					3
01.05	B-01, OPERATING HOURS						●												●										3
01.06	B-01. HWS TEMP SETPOINT							●											●										3
01.07	B-01, HWS (LEAVING) TEMP		●																●					●	●				3
01.08	B-01, HWR (ENTERING) TEMP		●																●					●	●				3
01.09	B-01, HW FLOW STATUS												●						●								●		3
01.10	BP-01, STATUS											●							●				●						3
01.11	BP-01, START/STOP (ENABLE)															●			●										3
02.01	B-02, BOILER STATUS	●										●							●										3
02.02	B-02, BOILER ENABLE															●			●										3
02.03	B-02, OPERATING TEMP		●																●					●	●				3
02.04	B-02, OPERATING PRESSURE			●															●					●					3
02.05	B-02, OPERATING HOURS						●												●										3
02.06	B-02. HWS TEMP SETPOINT							●											●										3
02.07	B-02, HWS (LEAVING) TEMP		●																●					●	●				3
02.08	B-02, HWR (ENTERING) TEMP		●																●					●	●				3
02.09	B-02, HW FLOW STATUS												●						●								●		3
02.10	BP-02, STATUS											●							●				●						3
02.11	BP-02, START/STOP (ENABLE)															●			●										3
03.01	CWPP-01, STATUS	●										●							●				●			●			
03.02	CWPP-01, START/STOP																●		●										
03.03	CWPP-01, VFD FREQUENCY	●								●									●										
03.04	CWPP-01, VFD FAULT													●					●										
04.01	CWPP-02, STATUS	●										●							●				●			●			
04.02	CWPP-02, START/STOP																●		●										
04.03	CWPP-02, VFD FREQUENCY	●								●									●										
04.04	CWPP-02, VFD FAULT													●					●										
05	CWPP DP	●		●															●					●	●	●			
06.01	CWP-01, STATUS	●										●							●				●			●			
06.02	CWP-01, START/STOP																●		●										
06.03	CWP-01, VFD FREQUENCY	●								●									●										
06.04	CWP-01, VFD FAULT													●					●										
07.01	CWP-02, STATUS	●										●							●				●			●			
07.02	CWP-02, START/STOP																●		●										
07.03	CWP-02, VFD FREQUENCY	●								●									●										
07.04	CWP-02, VFD FAULT													●					●										
08	CWP DP	●		●															●					●	●	●			
09	MAIN CWS TEMP	●	●																●										
10	MAIN CWR TEMP	●	●																●										
11	MAIN CWS FLOW	●				●													●										
12	REMOTE SYSTEM DP	●		●															●										
13	BOILER EMERGENCY STOP										●								●										
14	OUTSIDE AIR TEMPERATURE									●									●										1, 2
15	HW SUPPLY TEMP	●								●									●										2
16	BTU'S DELIVERED	●																	●	●									4
17	MAIN HWS TEMP	●	●																●										
18	MAIN HWR TEMP	●	●																●										
19	COND WATER PRIMARY SYSTEM DP	●		●															●					●	●	●			
20	CHWS TEMP	●	●																●										
21	CHWR TEMP	●	●																●										
22	CHWR FLOW	●				●													●										
23.01	FC FAN START/STOP	●															●		●										
23.02	FC FAN ALARM	●												●					●										
23.03	FC FAN FAILURE	●												●															
23.04	FC SPRAY PUMP START/STOP	●															●		●										
23.05	FC SPRAY PUMP ALARM	●												●					●										
23.06	FC SPRAY PUMP FAILURE	●												●															
23.07	BASIN HEATER FAILURE	●												●					●						●				
23.08	FC LOW WATER LEVEL ALARM	●													●				●						●				
23.09	FC FAN SPEED	●			●																								
23.10	CCFC-01 CWPS FLOW	●				●													●										
24.01	FC FAN START/STOP	●															●		●										
24.02	FC FAN ALARM	●												●					●										
24.03	FC FAN FAILURE	●												●															
24.04	FC SPRAY PUMP START/STOP	●															●		●										
24.05	FC SPRAY PUMP ALARM	●												●					●										
24.06	FC SPRAY PUMP FAILURE	●												●															
24.07	BASIN HEATER FAILURE	●												●					●						●				
24.08	FC LOW WATER LEVEL ALARM	●													●				●						●				
24.09	FC FAN SPEED	●			●																								
24.10	CCFC-02 CWPS FLOW	●				●													●										
##	RESERVED FOR FUTURE																												

NOTES:

1. OUTSIDE AIR TEMPERATURE TO BE PROVIDED TO DDC SYSTEM FROM COMMON OAT TEMPERATURE SENSOR (GENERAL CONTROL DIAGRAMS PAGE)
2. THESE POINTS MAY BE PROVIDED BY THE BOILER MANUFACTUER AND DIRECTLY INTEGRATED TO THE BOILER CONTROLLER, IF DONE THIS WAY, BOILER CONTROLLER SHALL SEND THESE POINTS AS ANALOG INPUTS (AI) TO THE DDC SYSTEM FOR REMOTE OBSERVATION & TROUBLESHOOTING PURPOSES.
3. HARDWARE POINTS MAY BE INTEGRAL TO THE PROVIDED BOILER AND AVAIALBLE FROM BOILER BACNET INTERFACE.
4. BTU'S DELIVERED SHALL BE CALCULATED BY THE DDC SYSTEM BASED ON CONDENSER WATER SUPPLY/RETURN WATER TEMPERATURES AND SYSTEM FLOW.

1 CONDENSER WATER LOOP, BOILER, AND CLOSED CIRCUIT FLUID COOLER SEQUENCE OF OPERATIONS AND POINTS LIST
SCALE: NTS

Michael Baker INTERNATIONAL
12740 GRAN BAY PKWY W
SUITE 2110
JACKSONVILLE, FL 32258

Consultant

THE OFFICIAL RECORD OF THIS SHEET IS THE ELECTRONIC FILE DIGITALLY SIGNED AND SEALED UNDER RULE 61G15-23.004, F.A.C.

SEAL

NO.	DATE	DESCRIPTION

REVISIONS

FDOT

FDOT D3 OPERATIONS CENTER
CHIPLEY, FL 32428

MECHANICAL - CONTROLS

Project Number: 4483951-52-01
Date: 07-10-2026
Scale: AS NOTED
Sheet # M-805

PHASE IV - FINAL DESIGN SUBMITTAL
7/7/2026 11:58:57 AM

© Baker 2018

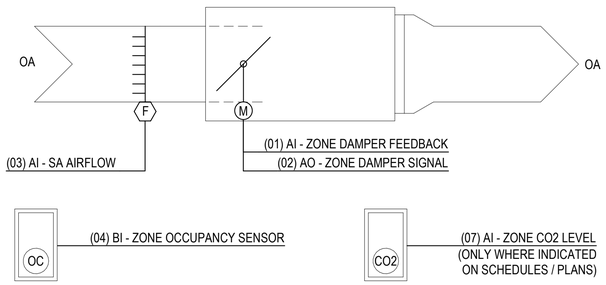

VARIABLE VOLUME (VAV) TERMINAL BOXES - SEQUENCE OF OPERATION:

VAV BOXES ARE FOR THE DELIVERY OF OUTSIDE AIR INDIVIDUAL SPACES ONLY, BOXES DO NOT OPERATE AS TEMPERATURE CONTROL. BOXES SHALL MODULATE THEIR SUPPLY AIR FROM MINIMUM CONTROL SET POINT TO MAXIMUM CONTROL SET POINT IN RESPONSE AS DESCRIBED BELOW.

DURING OCCUPIED HOURS AND MORNING STARTUP:
- VAV BOXES WILL MODULATE BETWEEN SCHEDULED MINIMUM AND MAXIMUM AIRFLOW OR UPON OCCUPANCY SENSORS/OVERRIDES OF THE SPACE.

DURING UNOCCUPIED HOURS:
- ALL BOXES WILL MODULATE TO THE FULLY CLOSED POSITION.

VAV BOX (CO_2 CONTROL) SEQUENCE OF OPERATION:
- REFER TO VAV SCHEDULE FOR BOXES IDENTIFIED AS UTILIZING CO_2 CONTROL.
- VAV BOX MUST UTILIZE CO_2-BASED DEMAND CONTROLLER VENTILATION COMPLIANT WITH ANSI/ASHRAE STANDARD 62.1.
- VAV BOX AIRFLOW MODULATION FROM MINIMUM (VAV MIN) TO MAXIMUM (VAV MAX) AIRFLOW MUST BE LINEAR AND PROPORTIONAL TO THE DIFFERENTIAL BETWEEN THE SPACE MEASURED CO_2 LEVEL AND OUTDOOR MEASURED CO_2 LEVEL (DCO2) OVER THE RANGE OF 150 (ADJ) TO 600 (ADJ) PPM POSITION:
  - DCO_2 = OUTDOOR MEASURED CO_2 - SPACE MEASURED CO_2
  - $DCO_2 \leq 150$ PPM; VAV BOX AIRFLOW = VAV MIN
  - $150 < DCO_2 \leq 600$ PPM; VAV BOX AIRFLOW = VAV MIN + ((DCO_2 / 450)*(VAV MAX - VAV MIN))
  - $DCO_2 > 600$ PPM; VAV BOX AIRFLOW = VAV MAX
  - GENERATE ALARM UPON RISE IN SPACE CO_2 10% (ADJ) ABV ALLOWABLE SETPOINT (660 PPM ABOVE OA PPM)

EMERGENCY OPERATION MODE (ALL BOXES):
- VAVs INDICATED IN THE VAV SCHEDULE AS MISSION CIRITCAL MUST OPERATE AS NORMAL. ALL OTHER VAV BOXES WILL MODULATE TO MINIMUM AIRFLOW POSITION

VARIABLE AIR VOLUME BOX POINTS LIST

POINT NUMBER	SYSTEM POINT DESCRIPTION	SHOW ON DISPLAY	HARDWARE POINTS: ANALOG: INPUT (AI)				HARDWARE POINTS: ANALOG: OUTPUT (AO)				HARDWARE POINTS: DIGITAL (BINARY): INPUT (BI)				HARDWARE POINTS: DIGITAL (BINARY): OUTPUT (BO)				SYSTEM FEATURES /SOFTWARE POINTS: PROGRAMS		SYSTEM FEATURES /SOFTWARE POINTS: ALARMS			NOTES
																			(AV) ANALOG VALUE	TREND	GENERAL/STATUS			
01	ZONE DAMPER FEEDBACK	●	●																	●				
02	ZONE DAMPER SIGNAL	●					●													●				
03	AIRFLOW	●	●																	●				
04	ZONE OCCUPANCY SENSOR	●									●									●				
05	AIRFLOW SETPOINT	●																	●	●				
06	ZONE DAMPER FAILURE																				●			
07	ZONE CO2 LEVEL	●	●																	●				1
08	HIGH CO2 LEVEL ALARM																				●			1
-	-																							
##	RESERVED FOR FUTURE																							

NOTES:
1. PROVIDE FOR VAV BOXES ONLY.

1 VARIABLE AIR VOLUME (VAV) TERMINAL BOX CONTROL DIAGRAM
SCALE: NTS

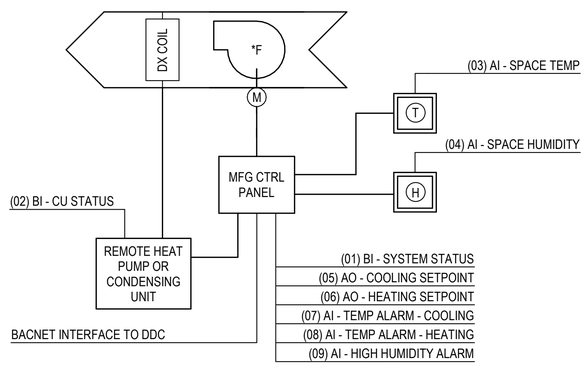

SPLIT DX HEAT PUMP - SEQUENCE OF OPERATION

- REMOTE CONTROL PANEL BY UNIT/SYSTEM MANUFACTURER SHALL BE WALL MOUNTED AND CONTROL COOLING AND HEATING MODES OF OPERATION. TEMPERATURE AND HUMIDITY SENSORS SHALL BE INTEGRAL TO THE CONTROL PANEL (IF AVAILABLE FROM MANUFACTURER) OR MOUNTED SEPARATELY ADJACENT TO THE CONTROL PANEL BY THE CONTROLS CONTRACTOR.
- MANUFACTUER'S CONTROL PANEL SHALL INCLUDE AUTOMATIC UNIT SWITCHING OPERATIONS (HEATING / COOLING) AND DISPLAY NORMAL FUNCTIONS, MALFUNCTIONS AND SERVICE DIAGNOSTICS ON AN INTEGRAL LCD DISPLAY. BACNET INTERFACE MODULE SHALL BE PROVIDED (IF AVAILABLE FROM MANUFACTURER) TO INTEGRATE INTO BUILDING DDC SYSTEM.
- ALARM CONDITIONS, IN ADDITION TO BEING DISPLAYED ON THE LOCAL LCD CONTROL PANEL SHALL BE RELAYED TO THE DDC SYSTEM. IF BACNET INTERFACE IS AVAILABLE, ALARM SPECIFICS SHALL BE SENT TO THE DDC SYSTEM, OTHERWISE A BASIC ALARM RELAY SHALL BE PROVIDED TO SIGNAL AN ALARM CONDITION TO THE DDC TO ALERT BUILDING OPERATOR OF CONDITION.
- THE UNIT SHALL OPERATE CONTINUOUSLY. THE HEATING TEMPERATURE SETPOINT (HEAT PUMPS) IS 69° F DB (ADJ). THE COOLING TEMPERATURE SETPOINT IS 75°F DB (ADJ). ALARMS SHALL BE PROVIDED WHEN SPACE TEMPERATURE CONDITIONS FALL OUTSIDE OF SETPOINTS BY 5°F OR WHEN SPACE HUMIDITY EXCEEDS 65%. ALL ALARM POINTS SHALL BE ADJUSTABLE.
- CONTROL CONTRACTOR SHALL PROVIDE ALL INTERCONNECTING WIRING, RELAYS AND CONNECTIONS BETWEEN MANUFACTURER'S CONTROL PANEL, INDOOR UNIT AND OUTDOOR CONDENSING UNIT AND INTERFACE TO BUILDING DDC SYSTEM.

EMERGENCY OPERATIONS MODE:
- SPLIT DX HEAT PUMPS MUST OPERATE NORMALLY TO PROVIDE PRIMARY AND/OR REDUNDANT CONDITIONING TO SPACES SERVED.

DUCTLESS MINI-SPLIT COOLING/ HEAT PUMP SYSTEMS (SSCU & SSHP) POINT LIST

POINT NUMBER	SYSTEM POINT DESCRIPTION	SHOW ON DISPLAY	HARDWARE POINTS: ANALOG: INPUT (AI): TEMPERATURE	HARDWARE POINTS: ANALOG: INPUT (AI): RELATIVE HUMIDITY			HARDWARE POINTS: ANALOG: OUTPUT (AO): TEMPERATURE				HARDWARE POINTS: DIGITAL (BINARY): INPUT (BI): UNIT STATUS				HARDWARE POINTS: DIGITAL (BINARY): OUTPUT (BO)				SYSTEM FEATURES /SOFTWARE POINTS: PROGRAMS: TREND			SYSTEM FEATURES /SOFTWARE POINTS: ALARMS: HIGH ANALOG	SYSTEM FEATURES /SOFTWARE POINTS: ALARMS: LOW ANALOG			NOTES
	DDC SYSTEM BACNET INTERFACE	●																								
01	SYSTEM STATUS	●									●								●							1
02	CONDENSING UNIT STATUS	●									●								●							1
03	SPACE TEMPERATURE	●	●																●							
04	SPACE HUMIDITY	●		●															●							
05	COOLING SETPOINT	●					●												●							
06	HEATING SETPOINT	●					●												●							
07	ZONE TEMP ALARM - COOLING																					●				
08	ZONE TEMP ALARM - HEATING																						●			
09	ZONE HIGH HUMIDITY ALARM																					●				
-	-																									
##	RESERVED FOR FUTURE																									

NOTES:
1. POINT MAY BE ACQUIRED THROUGH SYSTEM BACNET INTERFACE.

2 SPLIT DX AIR CONDITIONER/HEAT PUMP - CONTROL DIAGRAM
SCALE: NTS

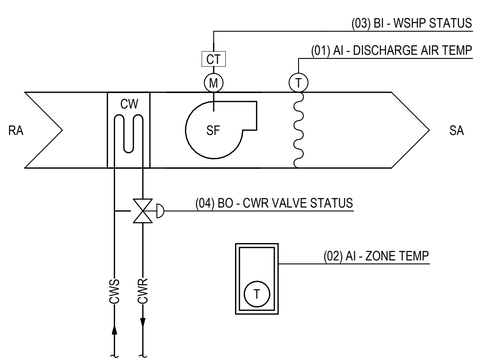

WATER SOURCE HEAT PUMP (WSHP) - SEQUENCE OF OPERATION:

- CONTROL PANEL BY UNIT/SYSTEM MANUFACTURER SHALL BE WALL MOUNTED AND CONTROL COOLING AND HEATING MODES OF OPERATION.
- MANUFACTUER'S CONTROL PANEL SHALL INCLUDE AUTOMATIC UNIT SWITCHING OPERATIONS (HEATING / COOLING) AND DISPLAY NORMAL FUNCTIONS, MALFUNCTIONS AND SERVICE DIAGNOSTICS ON AN INTEGRAL LCD DISPLAY.
- ALARM CONDITIONS, IN ADDITION TO BEING DISPLAYED ON THE LOCAL LCD CONTROL PANEL SHALL BE RELAYED TO THE DDC SYSTEM.
- UNIT WILL OPERATE IN HEATING OR COOLING MODE AS REQUIRED TO MAINTAIN SPACE THERMOSTAT SET POINTS.
- CONDENSER WATER VALVE WILL OPEN WHEN SPACE CALLS FOR EITHER HEATING OR COOLING OPERATION; CONDENSER WATER VALVE WILL REMAIN CLOSED WHEN WSHP IS NOT IN HEATING OR COOLING MODE.
- UNIT WILL BE PROVIDED WITH DISCHARGE AIR TEMPERATURE SENSOR FOR DDC MONITORING.

EMERGENCY OPERATIONS MODE:
- WSHP CONDENSER WILL CONTINUE NORMAL OPERATION UNLESS THE CONDENSER WATER LOOP TEMPERATURE CANNOT BE MAINTAINED.
- WHEN CONDENSER WATER LOOP TEMPERATURE CANNOT BE MAINTAINED, THE DDC SYSTEM WILL MODULATE THE POSITION OF CONTROL VALVES OF NON-MISSION CRITICAL UNITS CLOSED AND THE UNIT MUST DE-ENERGIZE.
- NON-ESSENTIAL WSHPS WILL BE DE-ENERGIZED, STARTING WITH THE UNITS WITH THE LEAST RUNTIME IN THE PAST 30 DAYS (ADJ), UNTIL LOOP TEMPERATURE IS MAINTAINED FOR 5 MINUTES (ADJ).
- WHEN CONDENSER WATER LOOP TEMPERATURE HAS BEEN MAINTAINED FOR 5 MINUTES (ADJ), WSHPS WILL BE ENERGIZED IN THE REVERSE ORDER OF WHICH THEY WERE DE-ENERGIZED. CONTROL VALVE OPERATION WILL RETURN TO NORMAL.

WATER SOURCE HEAT PUMP (WSHP) POINTS LIST

POINT NUMBER	SYSTEM POINT DESCRIPTION	SHOW ON DISPLAY	HARDWARE POINTS: ANALOG: INPUT (AI)				HARDWARE POINTS: ANALOG: OUTPUT (AO)				HARDWARE POINTS: DIGITAL (BINARY): INPUT (BI)				HARDWARE POINTS: DIGITAL (BINARY): OUTPUT (BO)				SYSTEM FEATURES /SOFTWARE POINTS: PROGRAMS		SYSTEM FEATURES /SOFTWARE POINTS: ALARMS			NOTES
																			(AV) ANALOG VALUE	TREND	GENERAL/STATUS			
01	DISCHARGE AIR TEMP	●	●																	●				
02	ZONE TEMPERATURE	●	●																	●				
03	WSHP STATUS	●									●									●				
04	CWR VALVE STATUS	●													●					●				
05	HIGH SPACE TEMPERATURE																				●			
06	WSHP FAILURE																				●			
-	-																							
##	RESERVED FOR FUTURE																							

NOTES:

3 WATER SOURCE HEAT PUMP CONTROL DIAGRAM
SCALE: NTS

Michael Baker
INTERNATIONAL
12740 GRAN BAY PKWY W
SUITE 2110
JACKSONVILLE, FL 32258

Consultant

THE OFFICIAL RECORD OF THIS SHEET IS THE ELECTRONIC FILE DIGITALLY SIGNED AND SEALED UNDER RULE 61G15-23.004, F.A.C.

SEAL

NO.	DATE	DESCRIPTION

REVISIONS

FDOT

FDOT D3 OPERATIONS CENTER
CHIPLEY, FL 32428

MECHANICAL - CONTROLS

7/7/2026 11:58:58 AM

PHASE IV - FINAL DESIGN SUBMITTAL

Project Number: 4483951-52-01

Date: 07-10-2026

Scale: AS NOTED

Sheet # M-806

© Baker 2018

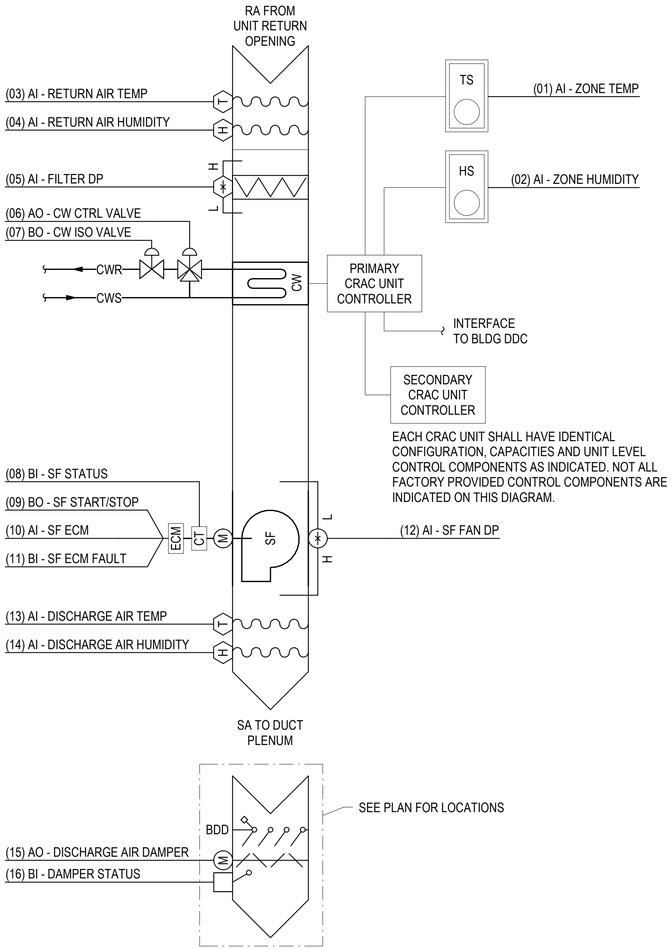

1 CRAC-01 CONTROL DIAGRAM
SCALE: NTS

COMPUTER ROOM AIR CONDITIONER (CRAC) SYSTEM - SEQUENCE OF OPERATION

- GENERAL:
  - MANUFACTURER'S CONTROLS SHALL ROTATE ACTIVE / STANDBY UNIT STATUS ON A WEEKLY (ADJ) BASIS TO MAINTAIN EQUAL RUNTIMES. MOTORIZED DAMPERS IN EACH DUCT PLENUM WILL FULLY OPEN WHEN THEIR ASSOCIATED CRAC UNIT IS OPERATING AND FULLY CLOSE WHEN IT IS NOT.

- RUN CONDITIONS:
  - THE CRAC SYSTEM SHALL OPERATE CONTINUOUSLY AND MUST MAINTAIN THE SPACE AS INDICATED ON M-002.
  - PROVIDE ALARMS AS FOLLOWS:
    - HIGH ZONE TEMPERATURE: IF THE ZONE TEMPERATURE IS GREATER THAN THE SPACE SETPOINT BY 5°F (ADJ)
    - LOW ZONE TEMPERATURE: IF THE ZONE TEMPERATURE IS LESS THAN 65° (ADJ)
    - HIGH ZONE HUMIDITY: IF THE ZONE DEWPOINT EXCEEDS 59°F
    - LOW ZONE HUMIDITY: IF THE ZONE DEWPOINT FALLS BELOW 42°F
    - HIGH UNIT DISCHARGE AIR TEMPERATURE: IF THE DISCHARGE AIR TEMPERATURE EXCEEDS 120°F (ADJ)
    - LOW UNIT DISCHARGE AIR TEMPERATURE: IF THE DISCHARGE AIR TEMPERATURE IS LESS THAN 40°F (ADJ)
  - THE ACTIVE CRAC UNIT WILL OPERATE TO MAINTAIN SETPOINTS. IF THE ACTIVE CRAC UNIT CANNOT MAINTAIN SETPOINTS, OR IS OTHERWISE NOT OPERATIONAL, THE BAS OR THE AUTO CHANGEOVER CONTROL PANEL MUST CHANGE THE POSITION OF THE MOTORIZED DAMPERS AND ENERGIZE THE STANDBY UNIT. PROVIDE COUNTERBALANCE BACKDRAFT DAMPERS AS REDUNDANCY IN THE EVENT MOTORIZED DAMPERS CANNOT CLOSE.

- SMOKE DETECTION CONDITION SHUTDOWN:
  - CRAC UNITS SERVING INFORMATION TECHNOLOGY AND COMMUNICATIONS EQUIPMENT SHALL CONTINUE TO OPERATE UPON A BUILDING WIDE FIRE ALARM OR DURING EMERGENCY OPERATION MODE.

- FAN / FAN STATUS:
  - THE ACTIVE CRAC UNIT FANS SHALL OPERATE CONTINUOUSLY WHEN THE UNIT IS COMMANDED TO RUN AND THE ISOLATION DAMPERS ARE PROVEN OPEN, UNLESS SHUTDOWN ON INTERNAL SAFETIES.
  - THE UNIT CONTROLLER SHALL MONITOR THE FAN STATUS AND PROVIDE ALARMS AS FOLLOWS:
    - FAN FAILURE: COMMANDED ON, BUT THE STATUS IS OFF
    - FAN IN HAND: COMMANDED OFF, BUT THE FAN IS ON
    - FAN RUNTIME EXCEEDED: FAN STATUS RUNTIME EXCEEDS A USER DEFINABLE LIMIT (ADJ)

- FILTER DIFFERENTIAL PRESSURE MONITOR:
  - THE CRAC UNIT CONTROLLER SHALL MONITOR THE DIFFERENTIAL PRESSURE ACROSS THE FILTER; THIS INFORMATION SHALL BE AVAILABLE ON THE UNIT CONTROLLER INTERFACE AND PROVIDED TO THE DDC SYSTEM.

- HUMIDITY CONTROL:
  - THE CRAC UNIT'S INTERNAL MICROPROCESSOR/CONTROLLER SHALL DETERMINE THE MOISUTRE CONTENT OF THE ROOM AIR AND PREVENT UNNESSARY HUMIDIFICATION AND DEHUMIDIFICATION CYCLES BY RESPONDING TO CHANGES IN DEWPOINT TEMPERATURE. ON A RISE IN SPACE HUMIDITY ABOVE UPPER LIMIT SETPOINT OF 55°F DEWPOINT (ADJ) THE DEHUMIDIFCATION CYCLE SHALL BE ENABLED, UPOIN A FALL IN SPACE HUMIDITY BELOW 55° DEWPOINT (ADJ) THE DEHUMDIFICATION CYCLE SHALL BE DISABLED. ON A FALL IN SPACE HUMIDITY BELOW LOWER LIMIT SETPOINT OF 42°F DEWPOINT (ADJ), THE HUMIDIFICATION CYCLE SHALL BE ENABLED UNTIL SPACE REACHES SETPOINT.

- DEHUMIDIFICATION CYCLE:
  - EACH CRAC UNIT SHALL BE PROVIDED WITH A DEHUMIDIFICATION CYCLE TO CONDENSE EXCESS MOISTURE ON THE COIL TO DISCHARGE THROUGH THE CONDENSATE DRAIN, WITH HOT GAS REHEATING PROVIDED TO OFFSET EXCESS SENSIBLE COOLING INCURRED DURING THE DEHUMDIFICATION CYCLE TO PREVENT SUBCOOLING OF THE SPACE BEYOND 5°F (ADJUSTABLE) BELOW THE ROOM TEMPERATURE SETPOINT. CRAC SYSTEM CONTROLLER SHALL ENABLE/MODULATE DEHUMIDIFICATION CYCLE AS REQUIRED TO MAINTAIN SPACE HUMIDITY LEVELS AT OR BELOW 55°F DEWPOINT.

- HUMIDIFICATION CYCLE:
  - EACH CRAC UNIT SHALL BE PROVIDED WITH A FACTORY INSTALLED SELF-CONTAINED ATMOSPHERIC STEAM GENERATOR UTILIZING BUILDING POTABLE WATER. CRAC SYSTEM CONTROLLER SHALL ENABLE/MODULATE STEAM SUPPLY TO MAINTAIN SPACE HUMIDITY LEVELS ABOVE 42°F DEWPOINT PER TIA-569.

- EMERGENCY OPERATIONS MODE:
  - CRAC UNITS MUST CONTINUE NORMAL OPERATION DURING
  - CRAC UNITS ARE FULLY REDUNDANT. UPON FAILURE OF A SINGLE CRAC UNIT THE REMAINING CRAC UNIT WILL IMMEDIATELY BEGIN NORMAL OPERATION.

CRAC (COMPUTER ROOM AIR CONDITIONER) - POINT LIST

POINT NUMBER	SYSTEM POINT DESCRIPTION	COLOR GRAPHIC	ANALOG INPUT (AI)			ANALOG OUTPUT (AO)			DIGITAL (BINARY) INPUT (BI)			DIGITAL (BINARY) OUTPUT (BO)			SYSTEM FEATURES PROGRAMS			SYSTEM FEATURES ALARMS			NOTES
			TEMPERATURE	RELATIVE HUMIDITY	PRESSURE	% OPEN/CLOSE	% OPEN/CLOSE	FAN % MODULATION (ECM)	STATUS ON/OFF	OPEN/CLOSE		OFF/ON (ENABLE)	OPEN/CLOSE	START/STOP	TREND	TIME SCHEDULING	ALARM INSTRUCT	AUTOMATIC RESTART	SENSOR FAIL	COMM. FAIL	
	CRAC UNIT CONTROLLER(S)	●														●	●	●	●	●	1
	SYSTEM GRAPHIC	●																			
01	ZONE TEMPERATURE		●												●				●		
02	ZONE HUMIDITY			●											●				●		
03	RETURN AIR TEMPERATURE		●												●						
04	RETURN AIR HUMIDITY			●											●						
05	FILTER DIFFERENTIAL PRESSURE				●										●						
06	CW COOLING VALVE (3-WAY)						●														
07	CW ISOLATION VALVE (2-WAY)											●									
08	SUPPLY FAN STATUS								●						●						
09	SUPPLY FAN START/STOP													●	●						
10	SUPPLY FAN ECM SETPOINT					●									●						
11	SUPPLY FAN ECM FAULT								●						●						
12	SUPPY FAN PRESSSURE				●										●						
13	DISCHARGE AIR TEMPERATURE		●												●						
14	DISCHARGE AIR HUMIDITY			●											●						
15	DISCHARGE AIR DAMPER												●								2
16	DAMPER STATUS									●											2
##	RESERVED FOR FUTURE																				

1. NOT ALL FACTORY PROVIDED CONTROL POINTS INDICATED - REFER TO CRAC UNIT IOM AND PROJECT SPECIFICATIONS FOR COMPLETE INTERNAL UNIT CONTROL DEVICES AND SEQUENCES INCLUDING INTEGRAL HUMIDIFIER CONTROL; SUBFLOOR WATER DETECTION, ETC.
2. PROVIDE POINT FOR EACH LOCATION INDICATED, TOTAL OF 4 LOCATIONS.

Michael Baker INTERNATIONAL
12740 GRAN BAY PKWY W
SUITE 2110
JACKSONVILLE, FL 32258

Consultant

THE OFFICIAL RECORD OF THIS SHEET IS THE ELECTRONIC FILE DIGITALLY SIGNED AND SEALED UNDER RULE 61G15-23.004, F.A.C.

SEAL

NO.	DATE	DESCRIPTION

REVISIONS

FDOT

FDOT D3 OPERATIONS CENTER
CHIPLEY, FL 32428

MECHANICAL - CONTROLS

Project Number: 4483951-52-01
Date: 07-10-2026
Scale: AS NOTED
Sheet # M-807

PHASE IV - FINAL DESIGN SUBMITTAL 7/7/2026 11:58:59 AM

© Baker 2018

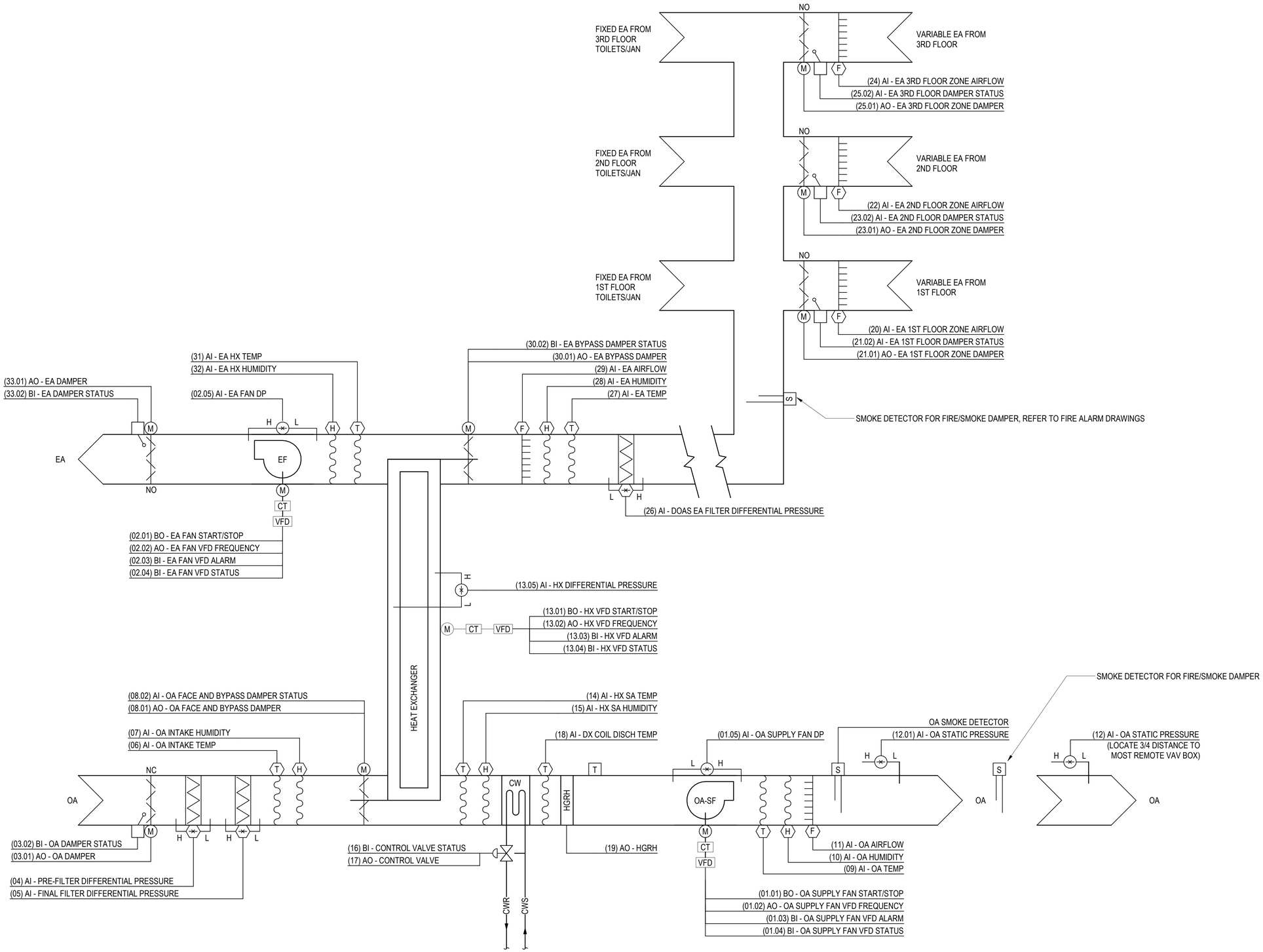

1 DOAS-01 CONTROL DIAGRAM
SCALE: NTS

Michael Baker INTERNATIONAL
12740 GRAN BAY PKWY W
SUITE 2110
JACKSONVILLE, FL 32258

Consultant

THE OFFICIAL RECORD OF THIS SHEET IS THE ELECTRONIC FILE DIGITALLY SIGNED AND SEALED UNDER RULE 61G15-23.004, F.A.C.

SEAL

REVISIONS

NO.	DATE	DESCRIPTION

FDOT

FDOT D3 OPERATIONS CENTER
CHIPLEY, FL 32428

MECHANICAL - CONTROLS

7/7/2026 11:58:59 AM

PHASE IV - FINAL DESIGN SUBMITTAL

Project Number: 4483951-52-01
Date: 07-10-2026
Scale: AS NOTED
Sheet # M-808

© Baker 2018

DOAS-01 SYSTEM POINT LIST

POINT NUMBER	SYSTEM POINT DESCRIPTION	SHOW ON DISPLAY	HARDWARE POINTS – ANALOG – INPUT (AI)				HARDWARE POINTS – ANALOG – OUTPUT (AO)			HARDWARE POINTS – DIGITAL (BINARY) – INPUT (BI)			HARDWARE POINTS – DIGITAL (BINARY) – OUTPUT (BO)			SYSTEM FEATURES / SOFTWARE POINTS – PROGRAMS							SYSTEM FEATURES / SOFTWARE POINTS – ALARMS						NOTES
			TEMPERATURE	RELATIVE HUMIDITY	AIRFLOW	PRESSURE	% OPEN / FREQUENCY	% OPEN / CLOSE	% OPEN / FREQUENCY	STATUS ON / OFF	ALARM / FAULT	OPEN / CLOSE	START / STOP			TREND	TIME SCHEDULING	OPT. START/STOP	EVENT	ALARM INSTRUCT	RUN TIME	AUTO RESTART	HIGH ANALOG	LOW ANALOG	SENSOR FAIL	FLOW FAIL	COMM. FAIL	SMOKE DETECTOR	
	DDC CONTROL PANEL																●	●	●	●	●	●					●		
01.01	OA SUPPLY FAN START/STOP	●											●			●													1
01.02	OA SUPPLY FAN VFD FREQUENCY	●							●							●													1
01.03	OA SUPPLY FAN VFD ALARM	●									●					●													
01.04	OA SUPPLY FAN VFD STATUS	●								●						●													
01.05	OA SUPPLY FAN DP	●				●										●													
02.01	EA FAN START/STOP	●											●			●													
02.02	EA FAN VFD FREQUENCY	●							●							●													
02.03	EA FAN VFD ALARM	●									●					●													
02.04	EA FAN VFD STATUS	●								●						●													
02.05	EA FAN DP	●				●										●													
03.01	OA DAMPER	●						●								●													
03.02	OA DAMPER STATUS	●										●																	
04	PRE-FILTER DIFFERENTIAL PRESSURE	●				●										●													
05	FINAL FILTER DIFFERENTIAL PRESSURE	●				●										●													
06	OA INTAKE TEMP	●	●													●													
07	OA INTAKE HUMIDITY	●		●												●													
08.01	OA FACE AND BYPASS DAMPER	●						●								●													
08.02	OA FACE AND BYPASS DAMPER STATUS	●										●																	
09	OA TEMP	●	●													●													
10	OA HUMIDITY	●		●												●													
11	OA AIRFLOW	●			●											●													
12.01	OA STATIC PRESSURE	●				●										●													
12.02	OA STATIC PRESSURE	●				●										●													
13.01	HX VFD START/STOP												●			●													
13.02	HX VFD FREQUENCY								●							●													
13.03	HX VFD ALARM										●					●													
13.04	HX VFD STATUS									●						●													
13.05	HX DIFFERENTIAL PRESSURE					●										●													
14	HX SA TEMP		●													●													
15	HX SA HUMIDITY			●												●													
16	CONTROL VALVE STATUS											●				●													
17	CONTROL VALVE							●								●													
18	DX COIL DISCH TEMP		●													●													
18.1	HGRH							●								●													
19	EA 1ST FLOOR ZONE AIRFLOW				●											●													
20	EA 1ST FLOOR ZONE DAMPER							●								●													
	EA 1ST FLOOR DAMPER STATUS																												
21	EA 2ND FLOOR ZONE AIRFLOW				●											●													
22	EA 2ND FLOOR ZONE DAMPER							●								●													
	EA 2ND FLOOR DAMPER STATUS																												
23	EA 3RD FLOOR ZONE AIRFLOW				●											●													
24	EA 3RD FLOOR ZONE DAMPER							●								●													
	EA 3RD FLOOR DAMPER STATUS																												
25	DOAS EA FILTER DIFFERENTIAL PRESSURE					●										●													
26	EA TEMP		●													●													
27	EA HUMIDITY			●												●													
28	EA AIRFLOW				●											●													
29.01	EA BYPASS DAMPER							●								●													
29.02	EA BYPASS DAMPER STATUS											●																	
30	EA HX TEMP		●													●													
31	EA HX HUMIDITY			●												●													
32.01	EA DAMPER							●								●													
32.02	EA DAMPER STATUS											●				●													

NOTES:

1. SUPPLY AND EXHAUST FAN & VFD'S AS INDICATED ON THESE DRAWINGS MAY REFER TO FAN-WALL ARRAYS CONSISTING OF MULTIPLE FANS AND VFD'S; FAN WALL SHALL MODULATE PER MANUFACTURER'S PROVIDED CONTROLS FOR OPTIMUM PERFORMANCE AND EFFICIENCY BASED ON COMMON ANALOG OUTPUT SIGNAL.

DEDICATED OUTDOOR AIR SYSTEM - SEQUENCE OF OPERATION:

- DOAS UNIT WILL OPERATE DURING THE BUILDING OCCUPIED HOURS PROGRAMMED INTO DDC TIMECLOCK, UPON CO_2 DETECTOR, OR LOCAL WSHP THERMOSTAT OCCUPANCY OVERRIDE.

- UPON STARTUP, THE UNIT OUTSIDE AIR INTAKE DAMPER AND EXHAUST AIR DAMPER WILL OPEN, ONCE DAMPER END SWITCHES ARE PROVEN OPEN, OUTDOOR AIR AND EXHAUST FANS WILL ENERGIZE AND RAMP UP TO THEIR DESIGN AIRFLOW SET POINTS AS MEASURED BY THE AIRFLOW MEASUREMENT STATIONS IN THE SUPPLY AND EXHAUST AIRSTREAMS. THE DOAS SUPPLY FAN WILL PROVIDE VARIABLE AIRFLOW IN RESPONSE TO THE VAV BOX DEMANDS.
  - THE SUPPLY AIR FAN WILL NOT PROVIDE AIRFLOW LESS THAN THE SUM OF MINIMUM AIRFLOW OF THE VAV BOXES. EXHAUST FAN WILL VARY WITH THE SUPPLY FAN AIRFLOW MAINTAINING AIRFLOW OF 3-5% (ADJ) LESS THAN SUPPLY AIRFLOW DOWN TO THE MINIMUM EA AIRFLOW SCHEDULED (Σ FIXED EA AIRFLOWS).
  - THE DDC SYSTEM WILL SUM THE FLOW OF THE VAV BOXES ON EACH FLOOR. EA VAV BOXES VAV-116, -218, -314 WILL MODULATE TO MAINTAIN VARIABLE EXHAUST AIRFLOW OF 3-5% (ADJ) LESS THAN THE SUM OF SUPPLY AIR PROVIDED TO THE RESPECTIVE FLOOR (FIXED OA AIRFLOWS + SUM OF VAV BOX AIRFLOWS). EA VAV BOXES VAV-115, -217, -313 WILL MAINTAIN A CONSTANT AIRFLOW AS SCHEDULED.

- DOAS UNIT WILL OPERATE TO FULLY CONDITION AND DEHUMIDIFY OUTDOOR AIRSTREAMS AND DELIVER AIR AT ROOM NEUTRAL TEMPERATURES UTILIZING ENERGY RECOVERY, ECONOMIZER, DX COOLING AND HOT GAS REHEAT TO MEET THE BUILDING REQUIREMENTS IN THE MOST ENERGY EFFICIENT MANNER AS DETERMINED BY THE DOAS UNIT'S INTERNAL CONTROLS. SEE M-002 FOR INDOOR DESIGN SETPOINTS. THE DEHUMIDIFICATION MODE OF OPERATION IN THE COOLING SEASON MUST ONLY UTILIZE NON-ENERGY CONSUMING HOT GAS REHEAT. REHEAT MUST BE LIMITED TO 69° F (ADJ) TO REDUCE LOADS AND ASSOCIATED ENERGY CONSUMPTION OF SPACE SENSIBLE CONDITIONING EQUIPMENT.

  BASED ON THESE OBJECTIVES, THE OPERATIONAL MODES FOR MAXIMUM ENERGY EFFICIENCY ARE AS OUTLINED BELOW BASED ON THE OUTDOOR AIR TEMPERATURE AND DEW POINT AS DETERMINED BY THE TEMPERATURE AND HUMIDITY SENSORS IN THE UNIT'S OUTDOOR AIRSTREAM:

  A. <u>OUTSIDE AIR TEMPERATURE ≤ THAN 55° F:</u>
     - ENERGY WHEEL BYPASS DAMPER WILL BE CLOSED; ENERGY RECOVERY WILL OPERATE TO RECOVER HEAT FROM EXHAUST AIRSTREAM.
     - DOAS WSHP WILL OPERATE IN HEATING MODE TO DELIVER SUPPLY AIR AT A MINIMUM OF 69° F DB (ADJ)

  B. <u>OUTSIDE AIR TEMPERATURE 55° TO 69° F: OUTSIDE AIR DEW POINT ≤ 55° F:</u>
     a. RETURN AIR TEMPERATURE EXCEEDS OUTSIDE AIR TEMPERATURE:
        ENERGY RECOVERY WHEEL BYPASS DAMPERS MUST BE CLOSED AND ENERGY RECOVERY MUST OPERATE TO RECOVER HEAT FROM EXHAUST AIRSTREAM.
     b. RETURN AIR TEMPERATURE IS EQUAL OR LESS THAN OUTSIDE AIR TEMPERATURE:
        ENERGY WHEEL BYPASS DAMPER MUST BE OPEN AND ENERGY WHEEL MUST NOT OPERATE.
     c. WSHP MUST OPERATE IN HEATING MODE TO DELIVER SUPPLY AIR AT A MINIMUM OF 68° F DB.

  C. <u>OUTSIDE AIR TEMPERATURE 55° TO 69° F: OUTSIDE AIR DEW POINT > 55° F:</u>
     - ENERGY WHEEL BYPASS DAMPERS MUST BE OPEN AND ENERGY RECOVERY WHEEL MUST NOT OPERATE
     - DOAS WSHP MUST OPERATE IN COOLING MODE TO MAINTAIN COOLING COIL DISCHARGE BELOW 55° F WB.
     - DOAS WSHP MUST MODULATE HGRH COIL TO DELIVER SUPPLY AIR AT A MINIMUM OF 68° F DB.

  D. <u>OUTSIDE AIR TEMPERATURE 69° F TO 75° F: OUTSIDE AIR DEW POINT ≤ 55° F:</u>
     - ENERGY WHEEL BYPASS DAMPERS MUST BE OPEN; ENERGY RECOVERY WHEEL MUST NOT OPERATE.
     - DOAS WSHP NOT OPERATE IN HEATING OR COOLING MODE.

  E. <u>OUTSIDE AIR TEMPERATURE 69° F TO 75° F: OUTSIDE AIR DEW POINT > 55° F:</u>
     - OUTSIDE AIR DEW POINT > RETURN AIR DEW POINT:
       ENERGY WHEEL BYPASS DAMPERS SHALL CLOSE AND ENERGY WHEEL SHALL OPERATE TO PROVIDE FIRST STAGE DEHUMIDIFICATION
     - OUTSIDE AIR DEW POINT < RETURN AIR DEW POINT:
       BYPASS DAMPERS SHALL OPEN AND ENERGY WHEEL SHALL NOT OPERATE.
     - DOAS WSHP SHALL OPERATE IN COOLING MODE TO MAINTAIN DISCHARGE OFF OF COILING COIL BELOW 55°WB.
     - DOAS WSHP SHALL MODULATE HGRH COIL TO DELIVER SUPPLY AIR AT A MINIMUM OF 68°DB.

  F. <u>OUTSIDE AIR TEMPERATURE > 75° F: OUTSIDE AIR DEW POINT ≤ 55° F:</u>
     - RETURN AIR TEMPERATURE ≤ 75° F AND RETURN AIR DEW-POINT ≤ 55° F:
       ENERGY WHEEL BYPASS DAMPERS SHALL CLOSE AND ENERGY WHEEL SHALL OPERATE TO PRE-COOL AND DEHUMIDIFY OUTDOOR AIRSTREAM.
     - RETURN AIR TEMPERATURE > 75° F AND RETURN AIR DEW-POINT > 55° F:
       ENERGY WHEEL BYPASS DAMPERS SHALL OPEN AND ENERGY WHEEL SHALL NOT OPERATE.
     - WSHP SHALL OPERATE IN COOLING MODE TO MAINTAIN DISCHARGE OFF OF COOLING COIL BELOW 78° DB.

  G. <u>OUTSIDE AIR TEMPERATURE > 75° F: OUTSIDE AIR DEWPOINT > 55° F:</u>
     - EXHAUST AIRSTREAM ENTHALPY < OUTSIDE AIR ENTHALPY:
       ENERGY WHEEL BYPASS DAMPERS SHALL CLOSE AND ENERGY WHEEL SHALL OPERATE TO PRE-COOL OUTDOOR AIRSTREAM.
     - EXHAUST AIRSTREAM ENTHALPY ≥ OUTSIDE AIR ENTHALPY:
       ENERGY WHEEL BYPASS DAMPERS SHALL BE OPEN AND ENERGY WHEEL SHALL NOT OPERATE.
     - WSHP SHALL OPERATE IN COOLING MODE TO MAINTAIN DISCHARGE OFF OF COILING COIL BELOW 55° WB.
     - WSHP SHALL MODULATE HGRH COIL TO DELIVER SUPPLY AIR AT A MINIMUM OF 69°DB.
       - DURING "EMERGENCY OPERATIONS MODE" THE HGRH COIL WILL NOT OPERATE AND OUTDOOR/SUPPLY AIR WILL BE DELIVERED AT LESS THAN ROOM NEUTRAL TEMPERATURE.

- UNIT ALARM AND EVENT CONDITIONS SHALL BE IN ACCORDANCE WITH SPECIFICATION SECTION 23 09 23.
  THE FOLLOWING ALARMS SHALL BE GENERATED IN THE BMS SYSTEM:
  - IF OUTSIDE AIR OR EXHAUST AIR DAMPERS FAIL TO OPEN.
  - IF OUTSIDE AIR/SUPPLY AIR FAN OR RETURN/EXHAUST AIR FAN FAILS TO OPERATE.
  - WHEN OUTSIDE AIR PREFILTER (MERV-8), OUTSIDE AIR PRIMARY FILTER (MERV-13), OR RETURN/EXHAUST AIR PRIMARY FILTER (MERV-8) DIFFERENTIAL PRESSURE REACHES FILTER MANUFACTUER'S LOADED FILTER PRESSURE LIMIT.
  - OUTDOOR/SUPPLY AIRFLOW MEASUREMENT READING VARIES MORE THAN 10% FROM SETPOINT.
  - RETURN/EXHAUST AIRFLOW MEASUREMENT READING VARIES MORE THAN 10% FROM SETPOINT.
  - ENERGY WHEEL STATUS SHALL BE MONITORED AND AN ALARM SHALL SIGNAL IF OPERATION IS CALLED FOR BY WHEEL FAILS TO OPERATE.

- UNIT SAFETIES AND EMERGENCY SHUTDOWN:
  - UNIT SHALL BE DISABLED BY ACTIVATION OF ASSOCIATED DUCT SMOKE DETECTORS, SUPPLY AIR HIGH PRESSURE SENSOR, OR FIRE ALARM SYSTEM SHUTDOWN SIGNAL.

- EMERGENCY OPERATIONS MODE:
  - THE DOAS UNIT WILL CONTINUE TO OPERATE NORMALLY DURING EMERGENCY OPERATION MODE EXCEPT IF MORE THAN 2/3 OF WSHP UNITS ARE IN COOLING MODE. IN THAT CONDITION, THE FOLLOWING OCCURS:
  - DOAS HOT GAS REHEAT WILL DE-ENERGIZE.
  - VAV BOXES SERVING WSHPs IN COOLING MODE WILL MODULATE TO FULL OPEN POSITION.

1 DOAS-01 SEQUENCE OF OPERATION AND POINTS LIST
SCALE: NTS

Michael Baker INTERNATIONAL
12740 GRAN BAY PKWY W
SUITE 2110
JACKSONVILLE, FL 32258

Consultant

THE OFFICIAL RECORD OF THIS SHEET IS THE ELECTRONIC FILE DIGITALLY SIGNED AND SEALED UNDER RULE 61G15-23.004, F.A.C.

SEAL

NO.	DATE	DESCRIPTION

REVISIONS

FDOT

FDOT D3 OPERATIONS CENTER
CHIPLEY, FL 32428

MECHANICAL - CONTROLS

7/7/2026 11:59:00 AM

PHASE IV - FINAL DESIGN SUBMITTAL

Project Number: 4483951-52-01
Date: 07-10-2026
Scale: AS NOTED
Sheet # M-809

© Baker 2018