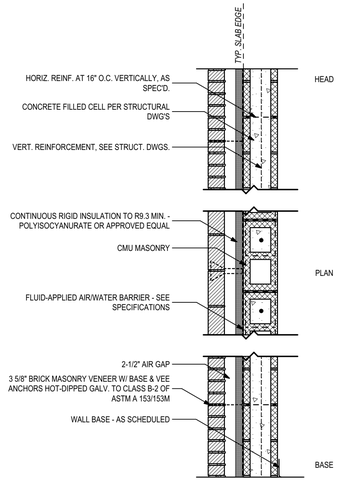

SYMBOL	CMU WIDTH	PARTITION WIDTH	FIRE RESISTANCE RATING TESTING DESIGN NO.	NOTES
M8B	7 5/8"	1'-3 1/4"	-	-
M8BF	7 5/8"	1'-3 1/4"	U905	ALL PENETRATIONS OF CMU TO BE FIRE RATED
M12B	11 5/8"	1'-7 1/4"	U905	-

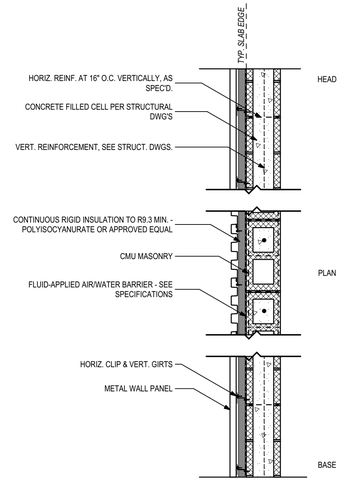

SYMBOL	CMU WIDTH	PARTITION WIDTH	FIRE RESISTANCE RATING TESTING DESIGN NO.	NOTES
M8X	7 5/8"	11 1/4"	-	-
M8XF	7 5/8"	11 1/4"	U905	ALL PENETRATIONS OF CMU TO BE FIRE RATED
M12X	11 5/8"	1'-3 1/4"	-	-

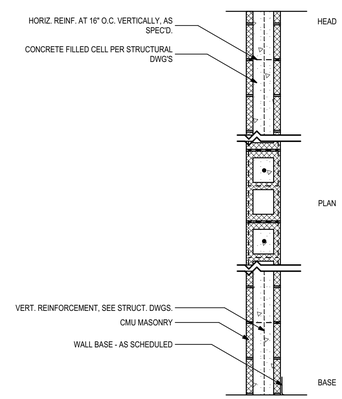

SYMBOL	CMU WIDTH	PARTITION WIDTH	FIRE RESISTANCE RATING TESTING DESIGN NO.	NOTES
M4*	3 5/8"	3 5/8"	-	36" TALL
M4+	3 5/8"	3 5/8"	-	-
M8+	7 5/8"	7 5/8"	-	-
M8+F	7 5/8"	7 5/8"	U905	ALL PENETRATIONS OF CMU TO BE FIRE RATED
M8	7 5/8"	7 5/8"	-	-
M8S	7 5/8"	7 5/8"	-	SMOKE PARTITION
M8F	7 5/8"	7 5/8"	U905	ALL PENETRATIONS OF CMU TO BE FIRE RATED
M12	11 5/8"	11 5/8"	-	-
M12S	11 5/8"	11 5/8"	-	SMOKE PARTITION

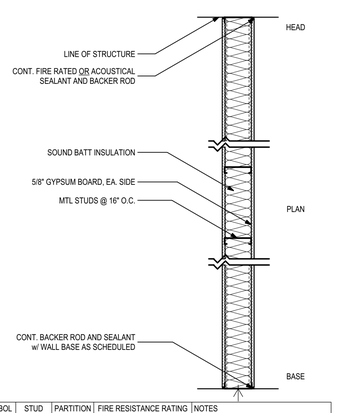

SYMBOL	STUD WIDTH	PARTITION WIDTH	FIRE RESISTANCE RATING TESTING DESIGN NO.	NOTES
S31	3 5/8"	4 1/4"	-	-
S311	3 5/8"	4 7/8"	-	-
S311S	3 5/8"	4 7/8"	-	SMOKE PARTITION

Partition Types:

INTERIOR WALL TYPE LEGEND

METAL STUD:

S411#T

WALL MATERIAL IDENTIFIER
WALL WIDTH IDENTIFER
NUMBERS OF LAYERS (GWB, CEMENT, WOOD) ON 2 SIDES
OTHER MODIFIER (IF APPLICABLE)
WALL HEIGHT INDENTIFIER (IF APPLICABLE)
NUMBERS OF LAYERS (GWB, CEMENT, WOOD) ON 2 SIDES

FURRING

F210#T

WALL MATERIAL IDENTIFIER
WALL WIDTH IDENTIFER
NUMBERS OF LAYERS (GWB, CEMENT, WOOD) ON 2 SIDES
OTHER MODIFIER (IF APPLICABLE)
WALL HEIGHT INDENTIFIER (IF APPLICABLE)
NUMBERS OF LAYERS (GWB, CEMENT, WOOD) ON 2 SIDES

C-H STUD:

H411#T

WALL MATERIAL IDENTIFIER
WALL WIDTH IDENTIFER
NUMBERS OF LAYERS (GWB, CEMENT, WOOD) ON 2 SIDES
OTHER MODIFIER (IF APPLICABLE)
WALL HEIGHT INDENTIFIER (IF APPLICABLE)
NUMBERS OF LAYERS (GWB, CEMENT, WOOD) ON 2 SIDES

CONCRETE:

C8^F

WALL MATERIAL IDENTIFIER
NUMBERS OF LAYERS (GWB, CEMENT, WOOD) ON 2 SIDES
OTHER MODIFIER (IF APPLICABLE)
NUMBERS OF LAYERS (GWB, CEMENT, WOOD) ON 2 SIDES

CMU:

M8^F

WALL MATERIAL IDENTIFIER
WALL WIDTH IDENTIFER
OTHER MODIFIER (IF APPLICABLE)
NUMBERS OF LAYERS (GWB, CEMENT, WOOD) ON 2 SIDES

WALL MATERIAL IDENTIFIER & WIDTH:

MATERIALS: S: METAL STUD F: FURRING H: C-H STUD C: CONCRETE M: CMU

SHOW AS ROUNDED VALUE FOR THE WIDTH OF THE STRUCTURE PORTION OF THE WALL

S1: 1 5/8" METAL STUD
S2: 2 1/2" METAL STUD
S3: 3 5/8" METAL STUD
S4: 4" METAL STUD
S5: 6" METAL STUD
S6: 8" METAL STUD

F0: 7/8" METAL FURRING CHANNEL
F1: 1 1/2" METAL FURRING CHANNEL
F2: 2 1/2" METAL STUD

H2: 2 1/2" C-H STUD
H4: 4" C-H STUD

M2: 2" CMU SOAP (1 5/8" ACTUAL)
M4: 4" CMU SOAP (3 5/8" ACTUAL)
M6: 6" CMU SOAP (5 5/8" ACTUAL)
M8: 8" CMU SOAP (7 5/8" ACTUAL)

C8: 6" CONCRETE
C12: 8" CONCRETE

EXTERIOR WALL FINISH MATERIAL IDENTIFIER:

MATERIALS: **B:** BRICK VENEER **X:** METAL WALL PANEL **Z:** GROUND FACE 4" CMU VENEER

INTERIOR WALL FINISH MATERIAL IDENTIFIER:

MATERIALS: **G:** 5/8" GYPSUM WALLBOARD

OF LAYERS ON SIDE 1 & 2:

SHOWS A VALUE FOR THE NUMBER OF LAYERS OF GYP BD / CEMENT BOARD / WOOD ON EACH SIDE OF THE STUD. A '0' INDICATES ZERO LAYERS OF MATERIAL. WHERE A WALL ONLY HAS GYP BD ON ONE SIDE, IT IS ALWAYS ON THE EXPOSED SIDE. SEE DETAIL FOR MATERIAL TYPE AND WIDTH. FOR S, F, H MATERIAL TYPES ONLY.

WALL HEIGHT IDENTIFIER:

NO SYMBOL: EXTEND TOTAL PARTITION TO STRUCTURE
^: STUDS TO STRUCTURE, GYP BOARD TO 4" ABOVE HIGHEST ADJACENT CEILING
+: EXTEND TOTAL PARTITION TO 4" ABOVE CEILING OR ONE FULL COURSE ABOVE CEILING (CMU)(BRACING AS REQUIRED)
#: EXTEND TOTAL PARTION TO CEILING (BRACE AS REQUIRED)
*****: PARTIAL HEIGHT (SEE PLANS/ ELEVATIONS FOR WALL HEIGHT)

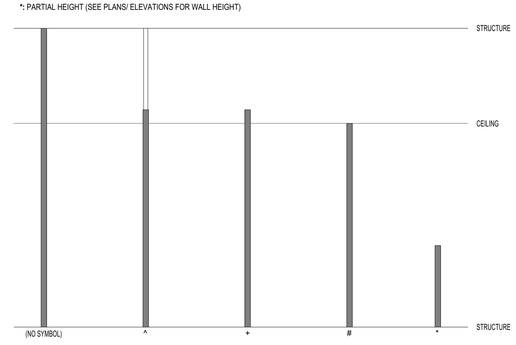

OTHER MODIFIERS:

F: FIRE RATED WALL (COORDINATE WITH LIFE SAFETY PLAN FOR RATING)
S: SMOKE RATED PARTITION
T: OMIT SOUND ATTENUATION BLANKET IN WALL (FOR S, F, H TYPES ONLY)

GENERAL NOTES:

1. ALL INTERIOR WALLS ARE DIMENSIONED TO FINISH FACE OF STUD OR CMU.
3. REFER TO LIFE SAFETY PLANS FOR FIRE RATED SEPARATIONS.
4. ALL METAL STUD & FURRED PARTITIONS TO RECEIVE SOUND ATTENUATION BLANKET FULL WIDTH OF STUD AND FULL HEIGHT OF WALL TO UNDERSIDE OF STRUCTURE/DECK, U.N.O. FIRE BLANKET.
5. SEE PLANS AND DETAIL PLANS FOR CHASE DIMENSIONS.
6. REFER TO DETAIL DRAWINGS AND SPECIFICATION FOR LOCATIONS AND INFORMATION ON THE VARIOUS TYPES OF GYPSUM BOARD.
7. REFER TO DETAIL PLANS AND SECTIONS FOR FURTHER DESCRIPTION OF INTERIOR PARTITIONS.
8. REFER TO FINISH DRAWINGS, SCHEDULES AND SPECIFICATIONS FOR WALL MATERIALS, FINISHES AND WALL PREP REQUIREMENTS.

Index of Drawings:

ID	Name	Current Issue
G1.0	Cover Sheet, Standard Abbreviations and General Notes	100% CDs
G1.1	Index of Drawings, Partition Types and UL Assemblies	Addendum #1
G1.2	UL Assemblies, Partition Type Details and Signage Details	100% CDs
C000	Cover Sheet	100% CDs
C100	General Notes	100% CDs
C200	Existing Conditions And Demolition Plan	Addendum #1
C300	Site Plan	Addendum #1
C301	Flammable Storage Building Plan	Addendum #1
C302	Circulation Plan	100% CDs
C400	Grading And Drainage Plan	Addendum #1
C401	Grading And Drainage Plan	100% CDs
C500	Utility Plan	Addendum #1
C600	Erosion Control Plan	100% CDs
C601	Erosion Control Details	100% CDs
C700	Construction Details	100% CDs
LS1.0	Code Summary and Fire Systems	100% CDs
LS1.1	Gymnasium Life Safety Plan	100% CDs
D1.0	Demolition Site Plan	100% CDs
A1.0	Architectural Site Plan	100% CDs
A1.01	Architectural Site Details	Addendum #1
A1.02	Architectural Site Details	100% CDs
A1.03	Architectural Site Details	100% CDs
A1.1	New Gymnasium First Floor Plan	Addendum #1
A1.1a	New Gymnasium First Floor Dimension Plan	100% CDs
A1.2	New Gymnasium Mech. Mezzanine Floor Plan	Addendum #1
A1.2a	New Gymnasium Mech. Mezzanine Dimension Plan	100% CDs
A1.3	New Gymnasium Roof Plan	100% CDs
A2.1	Exterior Building Elevations	Addendum #1
A2.2	Exterior Building Elevations	Addendum #1
A3.1	Building Sections	100% CDs
A3.2	Building Sections	Addendum #1
A3.3	Foundation & Section Details	Addendum #1
A3.4	Roof Section Details	100% CDs
A3.5	Roof Section Details	100% CDs
A3.6	Roof Section Details	Addendum #1
A4.1	Enlarged Plans	100% CDs
A4.2	Enlarged Plans	100% CDs
A4.3	Enlarged Plans	100% CDs
A5.1	Interior Elevations	100% CDs
A5.2	Interior Elevations	100% CDs
A5.3	Interior Elevations	100% CDs
A5.4	Interior Elevations	100% CDs
A5.5	Interior Elevations	100% CDs
A5.6	Interior Elevations	100% CDs
A5.7	Interior Casework Details	Addendum #1
A6.1	Door Schedules and Elevations	Addendum #1
A6.2	Door & Window Details - Interior	100% CDs
A6.3	Door & Window Details - Exterior	100% CDs
A7.1	New Gymnasium First Floor Reflected Ceiling Plan	Addendum #1
A7.2	New Gymnasium Mech. Mezzanine Reflected Ceiling Plan	100% CDs
A7.3	Ceiling Section Details	100% CDs
A8.0	Finish Schedules	Addendum #1
A8.1	New Gymnasium First Floor Finish Plan	Addendum #1
A8.2	New Gymnasium Court Striping Plan	100% CDs
A10.1	Alternates	100% CDs
S0.0	Cover Sheet	Addendum #1
S0.1	Abbreviations & Symbols	100% CDs
S0.2	Structural Notes	Addendum #1
S0.3	Structural Notes	100% CDs
S0.4	Structural Notes	100% CDs
S0.6	Structural Inspection Plan	100% CDs
S0.7	Structural Inspection Plan	100% CDs
S0.11	Roof Wind Diagram	100% CDs
S0.12	Wall Wind Diagrams	100% CDs
S1.1	Foundation & First Floor Plan	Addendum #1
S1.2	Mech. Mezzanine / Low Roof Framing Plan	Addendum #1
S1.3	High Roof Framing Plan	Addendum #1
S3.1	Building / Wall Sections	Addendum #1
S3.2	Building / Wall Sections	Addendum #1
S3.3	Building / Wall Sections	Addendum #1
S3.4	Wall Sections	100% CDs
S3.5	Building / Wall Sections	100% CDs
S3.6	Building / Wall Sections	Addendum #1
S4.1	Typical Schedules	100% CDs
S4.2	Typical Schedules	100% CDs
S4.3	Typical Schedules	Addendum #1
S5.1	Typical Foundation Details	100% CDs
S5.2	Typical Foundation Details	Addendum #1
S5.11	Typical Slab On Grade Details	100% CDs
S5.21	Typical Masonry Details	100% CDs
S5.22	Typical Masonry Details	100% CDs
S5.23	Typical Masonry Details	100% CDs
S6.1	Typical Steel Details	100% CDs
S6.2	Typical Steel Details	100% CDs
S6.3	Steel Details	Addendum #1
S6.21	Typical Steel Roof Details	100% CDs
S6.22	Typical Steel Roof Details	100% CDs
S6.23	Typical Steel Roof Details	Addendum #1
S6.24	Typical Steel Roof Details	Addendum #1
S6.25	Typical Roof Top Unit Details	Addendum #1
M1.0	Mechanical General Notes	100% CDs
M1.1	Mechanical Notes & Legend	100% CDs
M1.2	Mechanical Schedules	Addendum #1
M1.3	Mechanical Schedules	100% CDs
M1.4	Mechanical Details	100% CDs
M1.5	Mechanical Details	100% CDs
M2.0	Mechanical Demo Site Plan	100% CDs
M3.0	New Gymnasium First Floor Plan Mechanical	100% CDs
M3.1	New Gymnasium First Floor Plan Mechanical Piping	100% CDs
M3.2	New Gymnasium Mech. Mezzanine Mechanical Plan	100% CDs
M3.3	New Gymnasium Enlarged Plans Mech. Mezzanine	100% CDs
M3.4	New Gymnasium Enlarged Plans & Sections	100% CDs
M3.5	New Gymnasium Sections	100% CDs
M4.0	Controls General & Chiller	100% CDs
M4.1	Controls Heating Hot Water	100% CDs
M4.2	Controls Air Handler & Energy Recovery	100% CDs
M4.3	Controls Air Handler	100% CDs
PD1.0	New Gymnasium Plumbing Demolition Site Plan	100% CDs
P1.0	Plumbing Notes And Legend	100% CDs
P1.1	Plumbing Schedules	Addendum #1
P1.2	Plumbing Schedules	100% CDs
P1.3	Plumbing Details	100% CDs
P1.4	Plumbing Details	100% CDs
P1.5	Plumbing Details	100% CDs
P2.0	Temporary Site Plan - Plumbing	100% CDs
P2.1	New Work Site Plan - Plumbing	100% CDs
P3.0	New Gymnasium Plumbing First Floor Plan	Addendum #1
P3.1	New Gymnasium Plumbing Roof Plan	Addendum #1
P4.0	Plumbing Enlarged Plans	Addendum #1
P4.1	Plumbing Enlarged Plans	Addendum #1
P4.2	Plumbing Enlarged Plan	Addendum #1
P5.0	Plumbing Riser - Sanitary	100% CDs
P5.1	Plumbing Riser - Sanitary	Addendum #1
P5.2	Plumbing Riser - Domestic Water	100% CDs
P5.3	Plumbing Riser - Domestic Water	Addendum #1
P5.4	Plumbing Riser - Natural Gas	100% CDs
FP1.0	New Gymnasium Fire Protection Notes And Legend	100% CDs
FP1.1	Fire Protection Details	100% CDs
FP1.2	Fire Protection Details	100% CDs
FP2.0	New Work Site Plan - Fire Protection	100% CDs
FP3.0	New Gymnasium Fire Protection First Floor Plan	100% CDs
FP3.1	New Gymnasium Fire Protection Mezzanine Floor Plan	100% CDs
E1.0	Electrical General Notes	100% CDs
E1.1	Electrical Legend	100% CDs
E1.2	Electrical Details	100% CDs
E1.3	Electrical Details	100% CDs
E1.4	Electrical Details	100% CDs
E1.5	Electrical Details	100% CDs
E1.6	Fire Alarm Notes And One Line Diagram	100% CDs
ED2.0	Demolition Site Plan	100% CDs
E2.0	New Work Site Plan	100% CDs
ED3.0	Demolition Bldg. 9 Lighting Plan	100% CDs
ED3.1	Demolition Bldg. 9 Power/Systems Plan	100% CDs
ED3.2	Demolition Bldg. 10 Lighting Plan	100% CDs
ED3.3	Demolition Bldg. 10 Power/Systems Plan	100% CDs
ED3.4	Demolition Bldg. 15 First Floor Fire Alarm Plan	100% CDs
ED3.5	Demolition Bldg. 15 Second Floor Fire Alarm Plan	100% CDs
E3.0	Electrical Gym Lighting Plan	Addendum #1
E3.1	Electrical Gym Power Plan	Addendum #1
E3.2	Electrical Gym Systems Plan	Addendum #1
E3.3	Electrical Gym Mezzanine Plan	100% CDs
E3.4	New Work Bldg. 15 First Floor Fire Alarm Plan	100% CDs
E3.5	New Work Bldg. 15 Second Floor Fire Alarm Plan	100% CDs
ED4.0	Electrical Demolition One Line Diagram	100% CDs
E4.0	Electrical New Work One Line Diagram	100% CDs
E4.1	One Line Diagram Notes And Feeder Schedule	100% CDs
E5.0	Panel Schedules	100% CDs
E5.1	Panel Schedules	100% CDs
E6.0	Lightning Protection Notes And Details	100% CDs
E6.1	Lightning Protection Plan	Addendum #1

PHASE:	DRAWN:	REVIEWED:	DATE:	ID:	REVISION:	DRAWN:	REVIEWED:	DATE:
CONCEPT SCHEM. DESIGN	BG / RS	C. WHITLOCK	10/18/2024	1	Addendum #1	BG	RL	06/03/2025
DESIGN DEVELOPMENT	BG/KS/RS/MS	C. WHITLOCK	12/20/2024					
EARLY DEMOLITION PACKAGE	BG/RS/MS	R. LEWIS	03/21/2025					
80% CONSTRUCTION DOCS.	BG/RS/MS	R. LEWIS	05/09/2025					
PERMIT DOCS.								
100% CONSTRUCTION DOCS.	BG/RS/MS	R. LEWIS	05/09/2025					

THESE DRAWINGS AND DESIGNS ARE INSTRUMENTS OF SERVICE. THE DRAWINGS AND ASSOCIATED COPIES THEREOF, INCLUDING ELECTRONIC MEDIA AND CADD FILES, ARE THE PROPERTY OF ARCHITECTS LEWIS + WHITLOCK, P.A. THEIR USE, REPRESENTATION OR REPRODUCTION FOR ANY PURPOSE EXCEPT BY WRITTEN AGREEMENT WITH THE ARCHITECT IS PROHIBITED. THIS COPYRIGHT NOTIFICATION SHALL BE TRUE AS IF DIRECTLY PLACED ON EACH DRAWING EXHIBIT OR RENDERING ON THIS DOCUMENT AND SHALL NOT BE REMOVED FROM THESE DOCUMENTS

Client:
Leon County Schools
3420 W. Tharpe St. Suite 100
Tallahassee, FL 32303

Job Title:
Griffin Middle School - Phase 2
800 Alabama St. Tallahassee, FL 32304

Consultant:

Project #: 23483
Phase: 100% CDs

Seal:

Architects Lewis + Whitlock
206 West Virginia St.
Tallahassee, Florida 32301
850.942.1718
www.think3d.net

Description:
Index of Drawings, Partition Types and UL Assemblies

Sheet No.:
G1.1

BIMcloud: architectslw - BIMcloud Software as a Service/23483 - BIM Griffin Middle School Phase 2

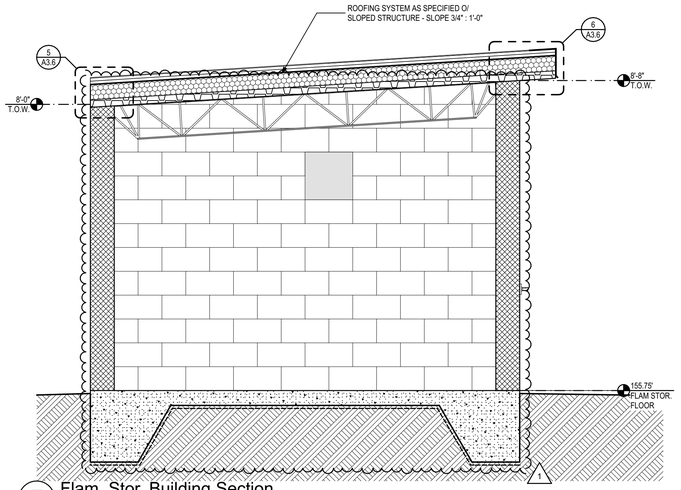

7 Flam. Stor. Building Section
1/2" = 1'-0"

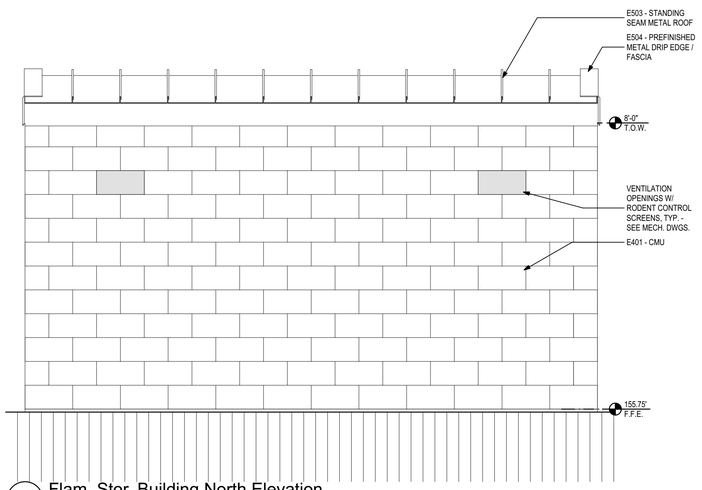

6 Flam. Stor. Building North Elevation
1/2" = 1'-0"

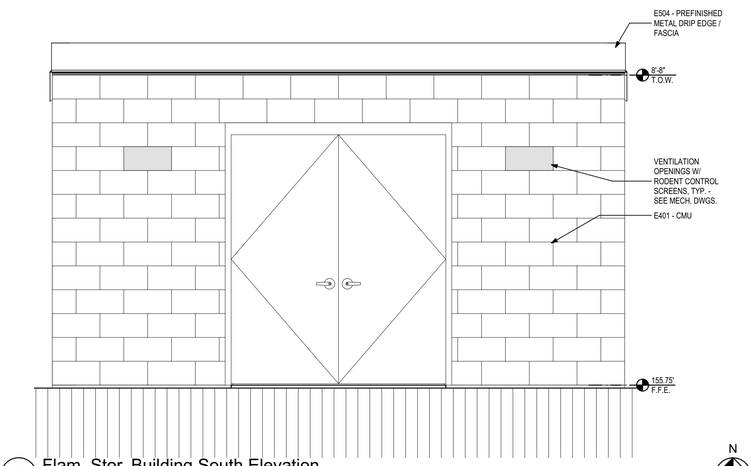

5 Flam. Stor. Building South Elevation
1/2" = 1'-0"

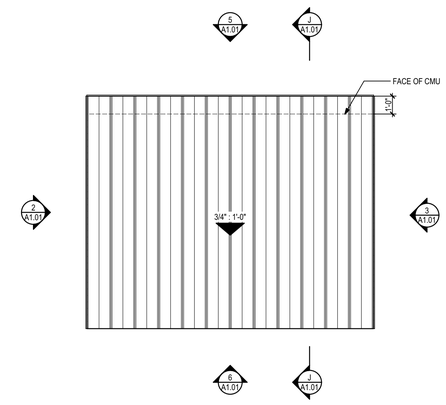

N

4 Enlarged Roof Plan - Flammable Storage Building
1/4" = 1'-0"

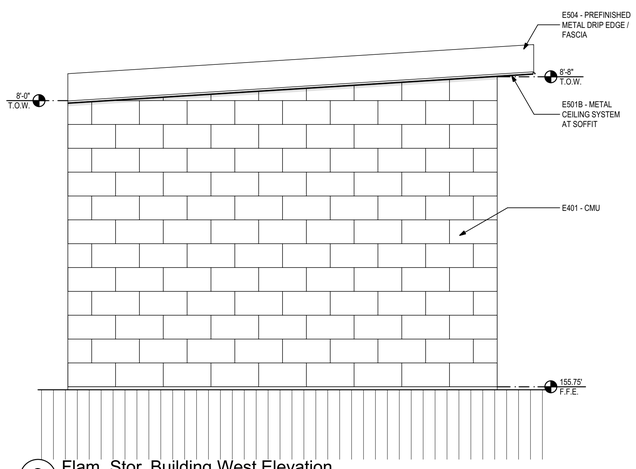

3 Flam. Stor. Building West Elevation
1/2" = 1'-0"

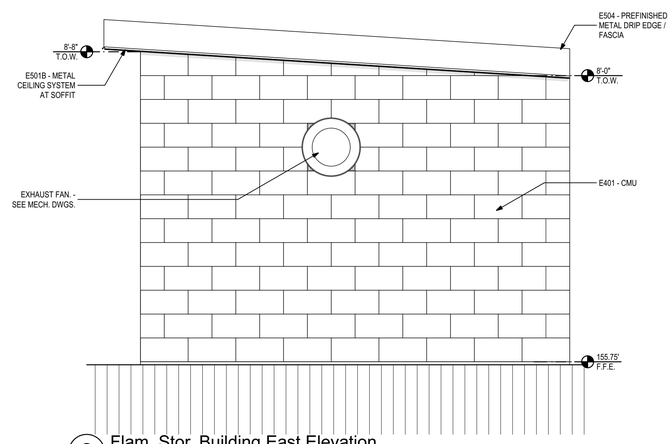

2 Flam. Stor. Building East Elevation
1/2" = 1'-0"

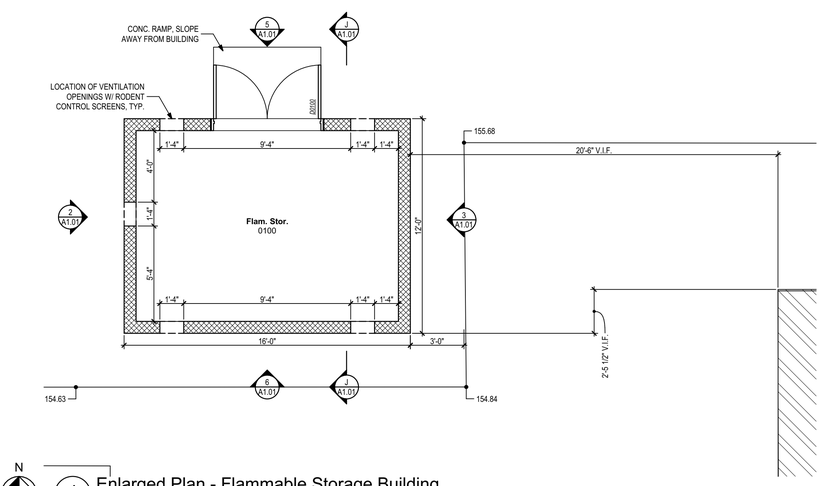

N

1 Enlarged Plan - Flammable Storage Building
1/4" = 1'-0"

PHASE:	DRAWN:	REVIEWED:	DATE:	ID:	REVISION:	DRAWN:	REVIEWED:	DATE:
CONCEPT SCHEM. DESIGN	BG / RS	C. WHITLOCK	10/18/2024	1	Addendum #1	BG	RL	06/03/2025
DESIGN DEVELOPMENT	BG/KS/RS/MS	C. WHITLOCK	12/20/2024					
EARLY DEMOLITION PACKAGE	BG/RS/MS	R. LEWIS	03/21/2025					
80% CONSTRUCTION DOCS.	BG/RS/MS	R. LEWIS	05/09/2025					
PERMIT DOCS.								
100% CONSTRUCTION DOCS.	BG/RS/MS	R. LEWIS	05/09/2025					

THESE DRAWINGS AND DESIGNS ARE INSTRUMENTS OF SERVICE. THE DRAWINGS AND ASSOCIATED COPIES THEREOF, INCLUDING ELECTRONIC MEDIA AND CADD FILES, ARE THE PROPERTY OF ARCHITECTS LEWIS + WHITLOCK, P.A.; THEIR USE, REPRESENTATION OR REPRODUCTION FOR ANY PURPOSE EXCEPT BY WRITTEN AGREEMENT WITH THE ARCHITECT IS PROHIBITED. THIS COPYRIGHT NOTIFICATION SHALL BE TRUE AS IF DIRECTLY PLACED ON EACH DRAWING EXHIBIT OR RENDERING ON THIS DOCUMENT AND SHALL NOT BE REMOVED FROM THESE DOCUMENTS

LEON COUNTY SCHOOLS

Client:
Leon County Schools
3420 W. Tharpe St. Suite 100
Tallahassee, FL 32303

Job Title:
Griffin Middle School - Phase 2
800 Alabama St. Tallahassee, FL 32304

Consultant:

Project #: 23483
Phase: 100% CDs

Seal:

ALW

Architects Lewis + Whitlock
206 West Virginia St.
Tallahassee, Florida 32301
850.942.1718
www.think3d.net

Description:
Architectural Site Details

Sheet No.:
A1.01

BIMcloud: architectslw - BIMcloud Software as a Service/23483 - BIM Griffin Middle School Phase 2

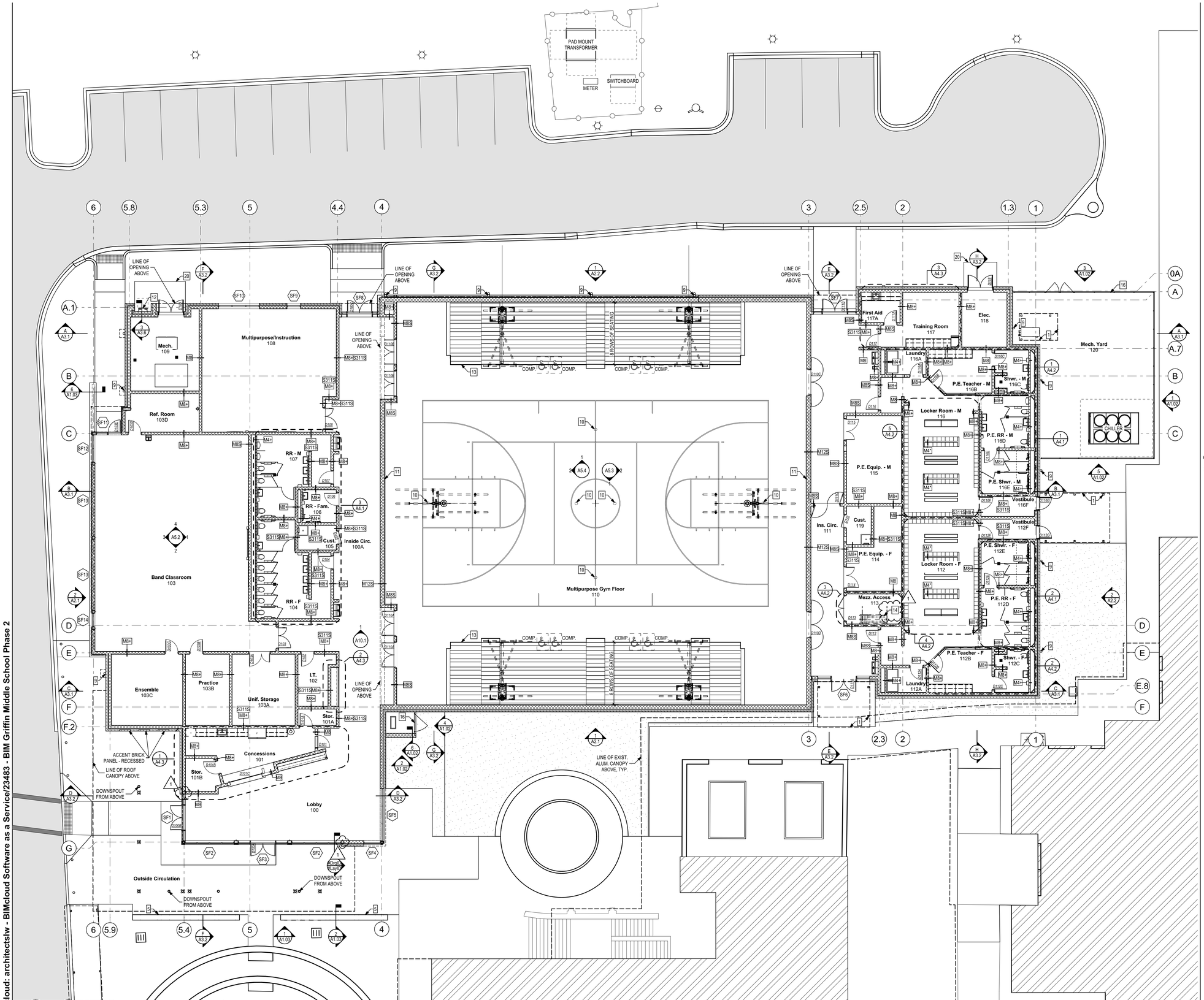

1 New Gymnasium First Floor Plan

3/32" = 1'-0"

Construction Notes

"X" REPRESENTS NOTE ON PLANS

1. NEW PRE-ENGINEERED ALUMINUM OVERHEAD CANOPY - SEE SPECIFICATIONS.
2. SINGLE POST FRONT-FOLDING CEILING HUNG BASKETBALL BACKSTOP - BASIS OF DESIGN: GARED PSS MODEL 3103 - SEE ELECTRICAL PLANS AND SPECIFICATIONS
3. INDOOR SCOREBOARD - BASIS OF DESIGN: NEVCO MODELS 2700 & 2770 - SEE ELECTRICAL PLANS AND SPECIFICATIONS
4. WALL-MOUNTED INDOOR SOUND SYSTEM, SEE ELECTRICAL PLANS AND SPECIFICATIONS
5. LOW SEATING WALL - SEE SHEET A1.03 FOR DETAILS.
6. COMBINATION ROOF DRAIN & OVERFLOW - BASIS OF DESIGN: ZURN Z163
7. STRUCTURAL COLUMN BELOW
8. CARD READER LOCATION. - SEE ELECTRICAL PLANS AND COORDINATE FOR DOOR HARDWARE.
9. 6" METAL DOWNSPOUT ASSEMBLY - SEE CIVIL DRAWINGS FOR CONTINUATION.
10. FLUSH MOUNTED FLOOR SLEEVE FOR VOLLEYBALL POST - BASIS OF DESIGN: GARED PSS 6400 W/ 6432 BRASS COVER TO USE W/ GARED 6000 SERIES VOLLEYBALL EQUIP., SEE SPECIFICATIONS
11. WALL PADDING - SEE SPECIFICATIONS
12. PROVIDE AND INSTALL OSHA COMPLIANT LADDER W/ 7'-0" TALL LOCKING STEEL LADDER SECURITY DOOR/LADDER GUARD TO ROOF - SEE SPECIFICATIONS.
13. ICC 300 COMPLIANT WALL ATTACHED POWERED TELESCOPIC BLEACHERS - BASIS OF DESIGN: MAXAM BY HUSSEY, SEE SPECIFICATIONS
14. PROVIDE AND INSTALL OSHA COMPLIANT ALUMINUM ALTERNATING TREAD STAIR TO MECH. MEZZANINE - BASIS OF DESIGN: GILMORE-KRAMER 68 DEGREE STEEP INCLINE STAIR - SEE SPECIFICATIONS.
15. NEW EXTERIOR GALVANIZED AND PAINTED GUARDRAIL/HANDRAIL - SEE SHEET FOR DETAILS.
16. NEW BLACK VINYL CHAIN-LINK FENCE - SEE SHEET A1.02 FOR DETAILS.
17. SINGLE POST REAR-FOLDING CEILING HUNG BASKETBALL BACKSTOP - BASIS OF DESIGN: GARED PSS MODEL 3105 - SEE ELECTRICAL PLANS AND SPECIFICATIONS
18. NEW PRE-FINISHED ALUM. CONDUCTOR HEAD w/ OVERFLOW.
19. NEW PRE-FINISHED ALUM. SEAMLESS GUTTER.
20. 4" REINFORCED CONCRETE WITH 8" TURN-DOWN EDGE W1.4XW1.4 WIRE REINFORCING w/BROOMED FINISH - SLOPE AS SHOWN ON DRAWING.
21. PROVIDE AND INSTALL OSHA COMPLIANT FLOOR MOUNTED REMOVABLE GUARDRAIL.
22. PROVIDE AND INSTALL GALV. STEEL COMMERCIAL ROOF ANCHOR.
23. PROVIDE AND INSTALL OSHA COMPLIANT ALUM. STAIR W SERRATED TREAD.

Key Plan

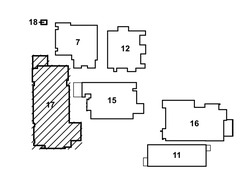

Drawing Legend

- NEW PARTITION
- EXISTING CONSTRUCTION TO REMAIN
- NEW CONSTRUCTION
- CONSTRUCTION ABOVE
- CONSTRUCTION BELOW

PHASE:	DRAWN:	REVIEWED:	DATE:	ID:	REVISION:	DRAWN:	REVIEWED:	DATE:
CONCEPT SCHEM. DESIGN	BG / RS	C. WHITLOCK	10/18/2024	1	Addendum #1	BG	RL	06/03/2025
DESIGN DEVELOPMENT	BG/KS/RS/MS	C. WHITLOCK	12/20/2024					
EARLY DEMOLITION PACKAGE	BG/RS/MS	R. LEWIS	03/21/2025					
80% CONSTRUCTION DOCS.	BG/RS/MS	R. LEWIS	05/09/2025					
PERMIT DOCS.								
100% CONSTRUCTION DOCS.	BG/RS/MS	R. LEWIS	05/09/2025					

THESE DRAWINGS AND DESIGNS ARE INSTRUMENTS OF SERVICE. THE DRAWINGS AND ASSOCIATED COPIES THEREOF, INCLUDING ELECTRONIC MEDIA AND CADD FILES, ARE THE PROPERTY OF ARCHITECTS LEWIS + WHITLOCK, P.A. THEIR USE, REPRESENTATION OR REPRODUCTION FOR ANY PURPOSE EXCEPT BY WRITTEN AGREEMENT WITH THE ARCHITECT IS PROHIBITED. THIS COPYRIGHT NOTIFICATION SHALL BE TRUE AS IF DIRECTLY PLACED ON EACH DRAWING EXHIBIT OR RENDERING ON THIS DOCUMENT AND SHALL NOT BE REMOVED FROM THESE DOCUMENTS

LEON COUNTY SCHOOLS

Client: Leon County Schools
3420 W. Tharpe St. Suite 100
Tallahassee, FL 32303

Job Title: Griffin Middle School - Phase 2
800 Alabama St. Tallahassee, FL 32304

Consultant:

Project #: 23483
Phase: 100% CDs

Seal:

ALW

Architects Lewis + Whitlock
206 West Virginia St.
Tallahassee, Florida 32301
850.942.1718
www.think3d.net

Description:
New Gymnasium First Floor Plan

Sheet No.:
A1.1

BIMcloud: architectslw - BIMcloud Software as a Service/23483 - BIM Griffin Middle School Phase 2

VERTICAL LEADER SIZING CALCULATIONS:

AREA 1:
Roof Area = 1,196 sq. ft.
Rainfall Intensity = 8 inches per hour
Total Gallons = 1,196 sq. ft. × 8 in/hr × 0.623 = 5,960.64 gallons per hour
GPM = 5,960.64 gallons per hour ÷ 60 = 99.34 GPM
Downspout Size/Capacity Provided: 6" round @ 600 GPM max.

AREA 2:
Roof Area = 1,196 sq. ft.
Rainfall Intensity = 8 inches per hour
Total Gallons = 1,196 sq. ft. × 8 in/hr × 0.623 = 5,960.64 gallons per hour
GPM = 5,960.64 gallons per hour ÷ 60 = 99.34 GPM
Downspout Size/Capacity Provided: 6" round @ 600 GPM max.

CUMULATIVE AREA 3:
Roof Area = 3,688 sq. ft.
Rainfall Intensity = 8 inches per hour
Total Gallons = 3,688 sq. ft. × 8 in/hr × 0.623 = 18,407.30 gallons per hour
GPM = 18,407.30 gallons per hour ÷ 60 = 306.79 GPM
Downspout Size/Capacity Provided: 6" round @ 600 GPM max.

CUMULATIVE AREA 4:
Roof Area = 3,300 sq. ft.
Rainfall Intensity = 8 inches per hour
Total Gallons = 3,300 sq. ft. × 8 in/hr × 0.623 = 16,451.04 gallons per hour
GPM = 16,451.04 gallons per hour ÷ 60 = 274.18 GPM
Downspout Size/Capacity Provided: 6" round @ 600 GPM max.

CUMULATIVE AREA 5:
Roof Area = 1,649 sq. ft.
Rainfall Intensity = 8 inches per hour
Total Gallons = 1,649 sq. ft. × 8 in/hr × 0.623 = 8,218.62 gallons per hour
GPM = 8,218.62 gallons per hour ÷ 60 = 136.98 GPM
Downspout Size/Capacity Provided: 4" round PVC @ 163 GPM max.

CUMULATIVE AREA 6:
Roof Area = 984 sq. ft.
Rainfall Intensity = 8 inches per hour
Total Gallons = 984 sq. ft. × 8 in/hr × 0.623 = 4,904.26 gallons per hour
GPM = 4,904.26 gallons per hour ÷ 60 = 81.74 GPM
Downspout Size/Capacity Provided: 4" round PVC @ 163 GPM max.

VERTICAL LEADER SIZING CALCULATIONS (CONT.):

AREA 9:
Roof Area = 640 sq. ft.
Rainfall Intensity = 8 inches per hour
Total Gallons = 640 sq. ft. × 8 in/hr × 0.623 = 3,185.28 gallons per hour
GPM = 3,185.28 gallons per hour ÷ 60 = 53.09 GPM
Downspout Size/Capacity Provided: 6" round PVC @ 600 GPM max.

AREA 10:
Roof Area = 726 sq. ft.
Rainfall Intensity = 8 inches per hour
Total Gallons = 726 sq. ft. × 8 in/hr × 0.623 = 3,620.90 gallons per hour
GPM = 3,620.90 gallons per hour ÷ 60 = 60.35 GPM
Downspout Size/Capacity Provided: 6" round @ 600 GPM max.

AREA 11:
Roof Area = 726 sq. ft.
Rainfall Intensity = 8 inches per hour
Total Gallons = 726 sq. ft. × 8 in/hr × 0.623 = 3,620.90 gallons per hour
GPM = 3,620.90 gallons per hour ÷ 60 = 60.35 GPM
Downspout Size/Capacity Provided: 6" round @ 600 GPM max.

AREA 12:
Roof Area = 1,071 sq. ft.
Rainfall Intensity = 8 inches per hour
Total Gallons = 1,071 sq. ft. × 8 in/hr × 0.623 = 5,334.34 gallons per hour
GPM = 5,334.34 gallons per hour ÷ 60 = 88.91 GPM
Downspout Size/Capacity Provided: 6" round @ 600 GPM max.

AREA 7:
Roof Area = 464 sq. ft.
Rainfall Intensity = 8 inches per hour
Total Gallons = 464 sq. ft. × 8 in/hr × 0.623 = 2,314.62 gallons per hour
GPM = 2,314.62 gallons per hour ÷ 60 = 38.58 GPM
Downspout Size/Capacity Provided: 4" round @ 163 GPM max.

AREA 8:
Roof Area = 688 sq. ft.
Rainfall Intensity = 8 inches per hour
Total Gallons = 688 sq. ft. × 8 in/hr × 0.623 = 3,425.44 gallons per hour
GPM = 3,425.44 gallons per hour ÷ 60 = 57.09 GPM
Downspout Size/Capacity Provided: 6" round @ 600 GPM max.

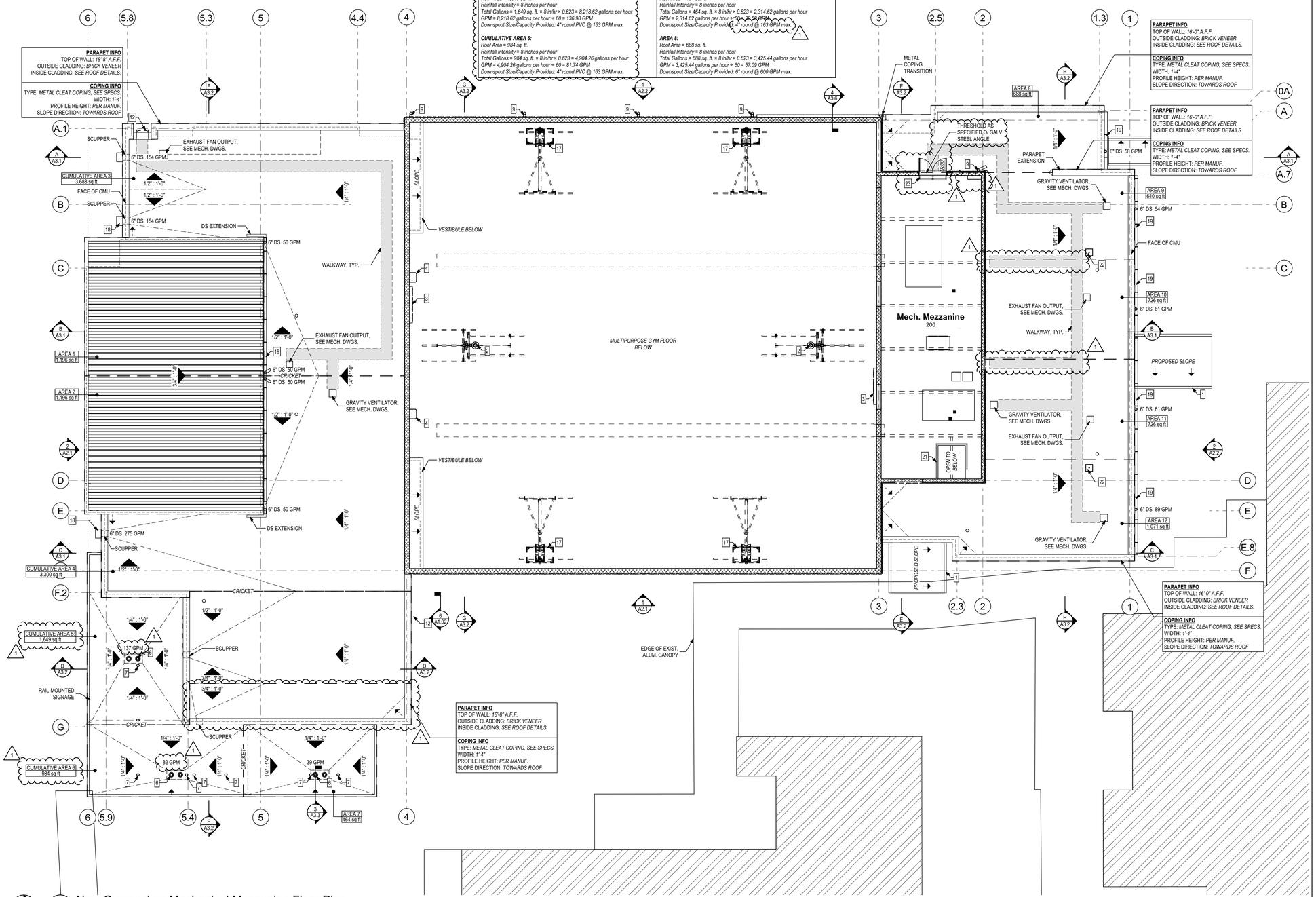

1 New Gymnasium Mechanical Mezzanine Floor Plan
3/32" = 1'-0"

Construction Notes

SEE SHEET A1.1 FOR CONSTRUCTION NOTES.

Key Plan

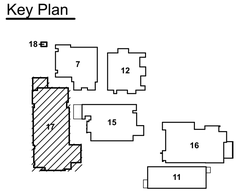

Drawing Legend

- NEW PARTITION
- EXISTING CONSTRUCTION TO REMAIN
- NEW CONSTRUCTION
- CONSTRUCTION ABOVE
- CONSTRUCTION BELOW

PHASE:	DRAWN:	REVIEWED:	DATE:	ID:	REVISION:	DRAWN:	REVIEWED:	DATE:
CONCEPT SCHEM. DESIGN	BG / RS	C. WHITLOCK	10/18/2024	1	Addendum #1	BG	RL	06/03/2025
DESIGN DEVELOPMENT	BG/KS/RS/MS	C. WHITLOCK	12/20/2024					
EARLY DEMOLITION PACKAGE	BG/RS/MS	R. LEWIS	03/21/2025					
80% CONSTRUCTION DOCS.	BG/RS/MS	R. LEWIS	05/09/2025					
PERMIT DOCS.								
100% CONSTRUCTION DOCS.	BG/RS/MS	R. LEWIS	05/09/2025					

THESE DRAWINGS AND DESIGNS ARE INSTRUMENTS OF SERVICE. THE DRAWINGS AND ASSOCIATED COPIES THEREOF, INCLUDING ELECTRONIC MEDIA AND CADD FILES, ARE THE PROPERTY OF ARCHITECTS LEWIS + WHITLOCK, P.A. THEIR USE, REPRESENTATION OR REPRODUCTION FOR ANY PURPOSE EXCEPT BY WRITTEN AGREEMENT WITH THE ARCHITECT IS PROHIBITED. THIS COPYRIGHT NOTIFICATION SHALL BE TRUE AS IF DIRECTLY PLACED ON EACH DRAWING EXHIBIT OR RENDERING ON THIS DOCUMENT AND SHALL NOT BE REMOVED FROM THESE DOCUMENTS

Client: Leon County Schools
3420 W. Tharpe St. Suite 100
Tallahassee, FL 32303

Job Title: Griffin Middle School - Phase 2
800 Alabama St. Tallahassee, FL 32304

Consultant:

Project #: 23483
Phase: 100% CDs

Seal:

Architects Lewis + Whitlock
206 West Virginia St.
Tallahassee, Florida 32301
850.942.1718
www.think3d.net

Description:
New Gymnasium Mech. Mezzanine Floor Plan

Sheet No.:
A1.2

BIMcloud: architectslw - BIMcloud Software as a Service/23483 - BIM Griffin Middle School Phase 2

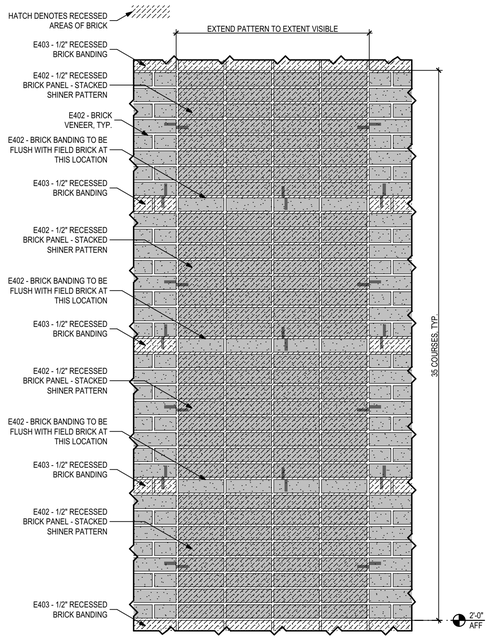

5 Typical Recessed Accent Brick Panel
1" = 1'-0"

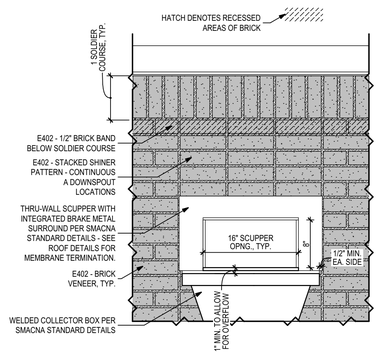

4 Typical Brick Detail at Scupper
1" = 1'-0"

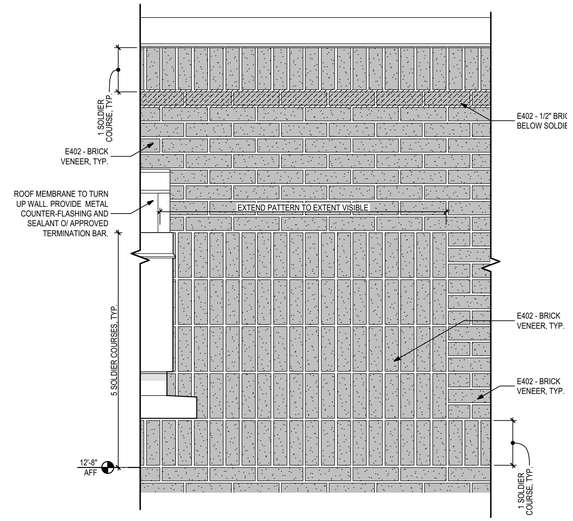

3 Typical Soldier Bond Detail At Canopy
1" = 1'-0"

EXTERIOR FINISH LEGEND

LEGEND	NAME	DESCRIPTION
	E301	**EXPOSED ARCHITECTURAL CONCRETE** *PROVIDE UNIFORM, SMOOTH CONCRETE SURFACE. MINIMUM FORM JOINT SPACING 4'-0" EA/WAY. PROVIDE UNIFORM SNAP-TIE PATTERN. SNAP-TIE HOLES ARE TO REMAIN EXPOSED AFTER FORM REMOVAL. NOTE: WALLS GREATER THAN 3' IN TOTAL HEIGHT AND LEFT EXPOSED SHALL RECEIVE 'WR MEADOWS INTRAGUARD SEALER'.*
	E401	**CMU** *COLOR: TBD, SEE SPECS FOR PAINT AND PRIMER TYPE / APPLICATION INFO. COURSING: VARYING, SEE ELEVATIONS*
	E402	**BRICK MASONRY VENEER - COLOR A** *COLOR: CHEROKEE FLASH FINISH: SMOOTH COURSING: VARYING, SEE ELEVATIONS*
	E403	**BRICK MASONRY VENEER - COLOR B** *COLOR: CHEROKEE VELOUR BUFF FINISH: SMOOTH COURSING: VARYING, SEE ELEVATIONS*
	E501A	**METAL CEILING SYSTEM** *PAC-CLAD FLUSH SOFFIT - 7"/12" COLOR: SILVER*
	E501B	**METAL WALL/CEILING SYSTEM - ACCENT COLOR** *PAC-CLAD FLUSH SOFFIT - 7"/12" COLOR: PACIFIC BLUE*
	E502	**METAL WALL PANEL - FIELD** *BASIS OF DESIGN: PAC-CLAD BOX RIB COLOR: SILVER (MATCH COLOR FOR ACCESSORIES UNLESS OTHERWISE NOTED)*
	E502A	**METAL WALL PANEL - ACCENT** *BASIS OF DESIGN: PAC-CLAD BOX RIB COLOR: ZINC*
	E502B	**METAL WALL PANEL - ACCENT** *BASIS OF DESIGN: PAC-CLAD BOX RIB COLOR: INTERSTATE BLUE*
	E503	**METAL ROOF** *BASIS OF DESIGN: PAC-CLAD TITE-LOC PLUS COLOR: SILVER*
	E504	**METAL COPING / DRIP EDGE / ASSORT BRAKE METAL** *PRE-FINISHED COLOR: SEE ELEVATION TO MATCH ADJACENT*
	E505	**HANDRAIL / GUARDRAIL** *GALVANIZED & PAINTED, COLOR TBD, SEE SPECS FOR APPLICATION INFO.*
	E801	**STOREFRONT SYSTEM** *BASIS OF DESIGN: KAWNEER COLOR/FINISH: CLEAR ANODIZED*
	E901	**ALUMINUM CANOPY SYSTEM** *COLOR/FINISH: TBD*

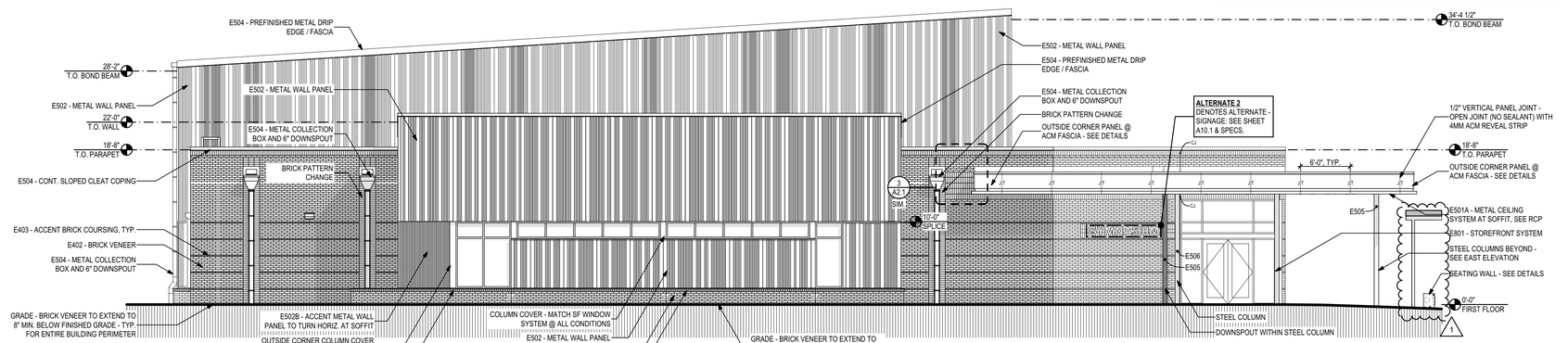

2 South Elevation
1/8" = 1'-0"

METAL WALL PANEL TYPES:
PROVIDE THE FOLLOWING APPROXIMATE PERCENTAGES OF METAL PANEL TYPES. ARCHITECT TO PROVIDE ADDITIONAL ANNOTATED BUILDING ELEVATIONS TO IDENTIFY EXACT METAL PANEL LAYOUT TO AID IN PANEL SHOP DRAWING PRODUCTION AND INSTALLATION.

BOX RIB 1 = 15%
BOX RIB 2 = 30%
BOX RIB 3 = 25%
BOX RIB 4 = 25%

QUANTITY OF DIFFERET COLORS/FINISHES AS INDICATED ON ELEVATIONS

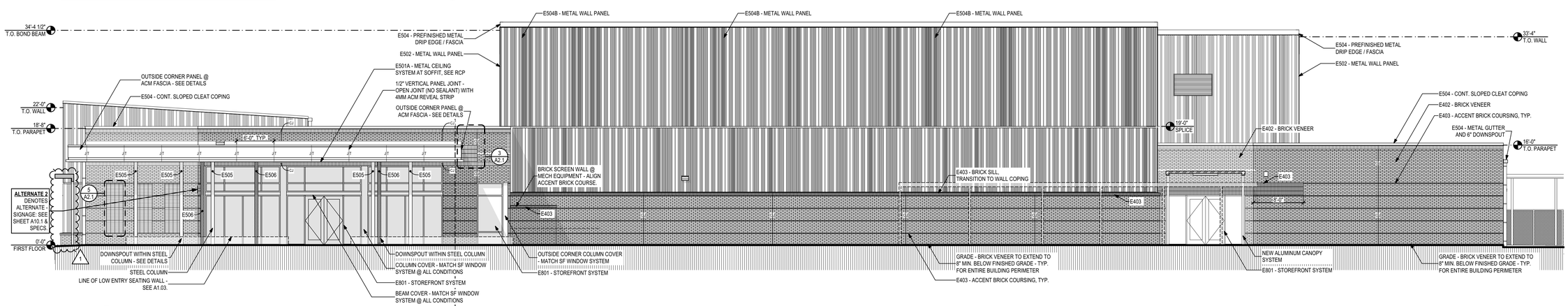

1 East Elevation
1/8" = 1'-0"

PHASE:	DRAWN:	REVIEWED:	DATE:	ID:	REVISION:	DRAWN:	REVIEWED:	DATE:
CONCEPT SCHEM. DESIGN	BG / RS	C. WHITLOCK	10/18/2024	1	Addendum #1	BG	RL	06/03/2025
DESIGN DEVELOPMENT	BG/KS/RS/MS	C. WHITLOCK	12/20/2024					
EARLY DEMOLITION PACKAGE	BG/RS/MS	R. LEWIS	03/21/2025					
80% CONSTRUCTION DOCS.	BG/RS/MS	R. LEWIS	05/09/2025					
PERMIT DOCS.								
100% CONSTRUCTION DOCS.	BG/RS/MS	R. LEWIS						

THESE DRAWINGS AND DESIGNS ARE INSTRUMENTS OF SERVICE. THE DRAWINGS AND ASSOCIATED COPIES THEREOF, INCLUDING ELECTRONIC MEDIA AND CADD FILES, ARE THE PROPERTY OF ARCHITECTS LEWIS + WHITLOCK P.A.; THEIR USE, REPRESENTATION OR REPRODUCTION FOR ANY PURPOSE EXCEPT BY WRITTEN AGREEMENT WITH THE ARCHITECT IS PROHIBITED. THIS COPYRIGHT NOTIFICATION SHALL BE TRUE AS IF DIRECTLY PLACED ON EACH DRAWING EXHIBIT OR RENDERING ON THIS DOCUMENT AND SHALL NOT BE REMOVED FROM THESE DOCUMENTS

Client:
Leon County Schools
3420 W. Tharpe St., Suite 100
Tallahassee, FL 32303

Job Title:
Griffin Middle School - Phase 2
800 Alabama St. Tallahassee, FL 32304

Consultant:

Project #: 23483
Phase: 100% CDs

Seal:

Architects Lewis + Whitlock
206 West Virginia St.
Tallahassee, Florida 32301
850.942.1718
www.think3d.net

Description:
Exterior Building Elevations

Sheet No.:
A2.1

BIMcloud: architectslw - BIMcloud Software as a Service/23483 - BIM Griffin Middle School Phase 2

EXTERIOR FINISH LEGEND

LEGEND	NAME	DESCRIPTION
	E301	**EXPOSED ARCHITECTURAL CONCRETE** *PROVIDE UNIFORM, SMOOTH CONCRETE SURFACE. MINIMUM FORM JOINT SPACING 4'-0" EA/WAY. PROVIDE UNIFORM SNAP-TIE PATTERN. SNAP-TIE HOLES ARE TO REMAIN EXPOSED AFTER FORM REMOVAL. NOTE: WALLS GREATER THAN 3' IN TOTAL HEIGHT AND LEFT EXPOSED SHALL RECEIVE 'WR MEADOWS INTRAGUARD SEALER'.*
	E401	**CMU** *COLOR: TBD, SEE SPECS FOR PAINT AND PRIMER TYPE / APPLICATION INFO. COURSING: VARYING, SEE ELEVATIONS*
	E402	**BRICK MASONRY VENEER - COLOR A** *COLOR: CHEROKEE FLASH FINISH: SMOOTH COURSING: VARYING, SEE ELEVATIONS*
	E403	**BRICK MASONRY VENEER - COLOR B** *COLOR: CHEROKEE VELOUR BUFF FINISH: SMOOTH COURSING: VARYING, SEE ELEVATIONS*
	E501A	**METAL CEILING SYSTEM** *PAC-CLAD FLUSH SOFFIT - 7"/12" COLOR: SILVER*
	E501B	**METAL WALL/CEILING SYSTEM - ACCENT COLOR** *PAC-CLAD FLUSH SOFFIT - 7"/12" COLOR: PACIFIC BLUE*
	E502	**METAL WALL PANEL - FIELD** *BASIS OF DESIGN: PAC-CLAD BOX RIB COLOR: SILVER (MATCH COLOR FOR ACCESSORIES UNLESS OTHERWISE NOTED)*
	E502A	**METAL WALL PANEL - ACCENT** *BASIS OF DESIGN: PAC-CLAD BOX RIB COLOR: ZINC*
	E502B	**METAL WALL PANEL - ACCENT** *BASIS OF DESIGN: PAC-CLAD BOX RIB COLOR: INTERSTATE BLUE*
	E503	**METAL ROOF** *BASIS OF DESIGN: PAC-CLAD TITE-LOC PLUS COLOR: SILVER*
	E504	**METAL COPING / DRIP EDGE / ASSORT BRAKE METAL** *PRE-FINISHED COLOR: SEE ELEVATION TO MATCH ADJACENT*
	E505	**HANDRAIL / GUARDRAIL** *GALVANIZED & PAINTED, COLOR TBD, SEE SPECS FOR APPLICATION INFO.*
	E801	**STOREFRONT SYSTEM** *BASIS OF DESIGN: KAWNEER COLOR/FINISH: CLEAR ANODIZED*
	E901	**ALUMINUM CANOPY SYSTEM** *COLOR/FINISH: TBD*

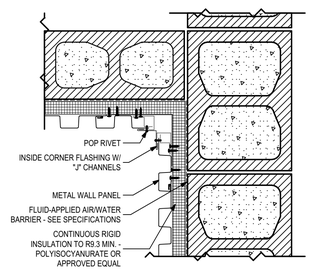

4 Inside Corner Detail
1 1/2"= 1'-0"

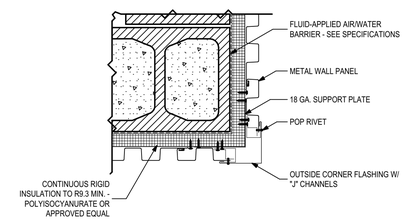

3 Outside Corner Detail
1 1/2"= 1'-0"

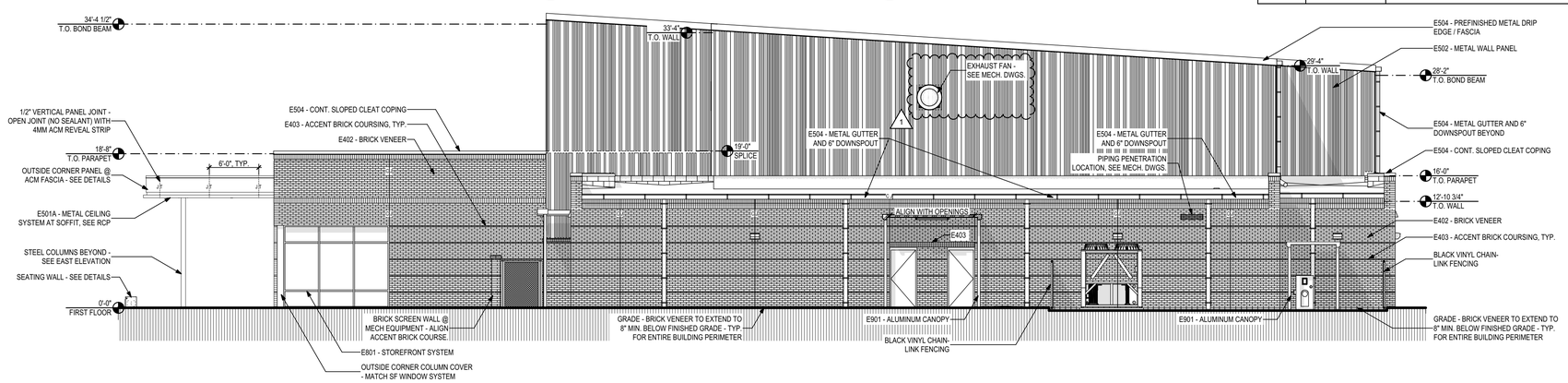

2 North Elevation
1/8" = 1'-0"

METAL WALL PANEL TYPES:

PROVIDE THE FOLLOWING APPROXIMATE PERCENTAGES OF METAL PANEL TYPES. ARCHITECT TO PROVIDE ADDITIONAL ANNOTATED BUILDING ELEVATIONS TO IDENTIFY EXACT METAL PANEL LAYOUT TO AID IN PANEL SHOP DRAWING PRODUCTION AND INSTALLATION.

BOX RIB 1 = 15%
BOX RIB 2 = 30%
BOX RIB 3 = 25%
BOX RIB 4 = 25%

QUANTITY OF DIFFERET COLORS/FINISHES AS INDICATED ON ELEVATIONS

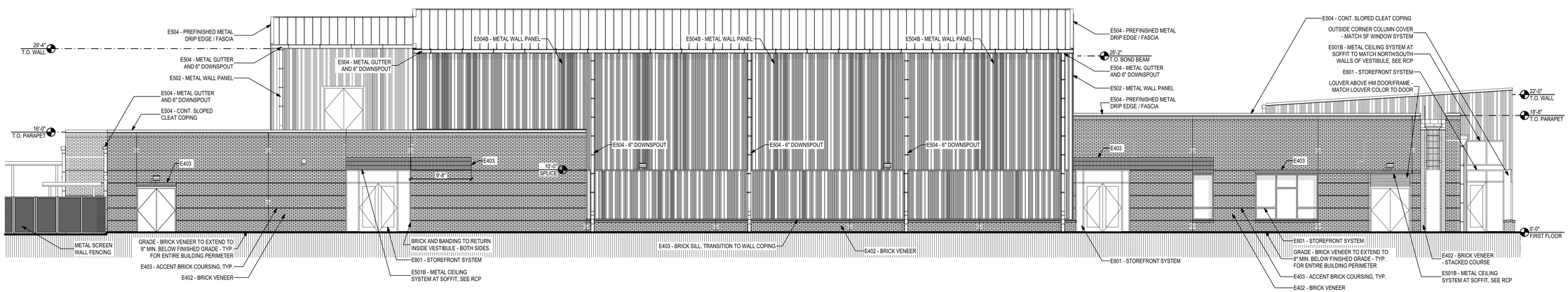

1 West Elevation
1/8" = 1'-0"

PHASE:	DRAWN:	REVIEWED:	DATE:	ID:	REVISION:	DRAWN:	REVIEWED:	DATE:
CONCEPT SCHEM. DESIGN	BG / RS	C. WHITLOCK	10/18/2024	1	Addendum #1	BG	RL	06/03/2025
DESIGN DEVELOPMENT	BG/KS/RS/MS	C. WHITLOCK	12/20/2024					
EARLY DEMOLITION PACKAGE	BG/RS/MS	R. LEWIS	03/21/2025					
80% CONSTRUCTION DOCS.	BG/RS/MS	R. LEWIS	05/09/2025					
PERMIT DOCS.								
100% CONSTRUCTION DOCS.	BG/RS/MS	R. LEWIS						

THESE DRAWINGS AND DESIGNS ARE INSTRUMENTS OF SERVICE. THE DRAWINGS AND ASSOCIATED COPIES THEREOF, INCLUDING ELECTRONIC MEDIA AND CADD FILES, ARE THE PROPERTY OF ARCHITECTS LEWIS + WHITLOCK P.A.; THEIR USE, REPRESENTATION OR REPRODUCTION FOR ANY PURPOSE EXCEPT BY WRITTEN AGREEMENT WITH THE ARCHITECT IS PROHIBITED. THIS COPYRIGHT NOTIFICATION SHALL BE TRUE AS IF DIRECTLY PLACED ON EACH DRAWING EXHIBIT OR RENDERING ON THIS DOCUMENT AND SHALL NOT BE REMOVED FROM THESE DOCUMENTS

Client: Leon County Schools
3420 W. Tharpe St., Suite 100
Tallahassee, FL 32303

Job Title: Griffin Middle School - Phase 2
800 Alabama St. Tallahassee, FL 32304

Consultant:

Project #: 23483
Phase: 100% CDs

Seal:

Architects Lewis + Whitlock
206 West Virginia St.
Tallahassee, Florida 32301
850.942.1718
www.think3d.net

Description:
Exterior Building Elevations

Sheet No.:
A2.2

BIMcloud: architectslw - BIMcloud Software as a Service/23483 - BIM Griffin Middle School Phase 2

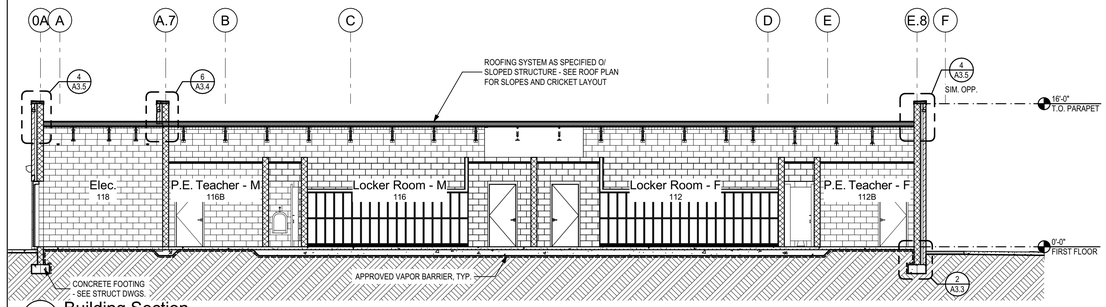

H Building Section
1/8" = 1'-0"

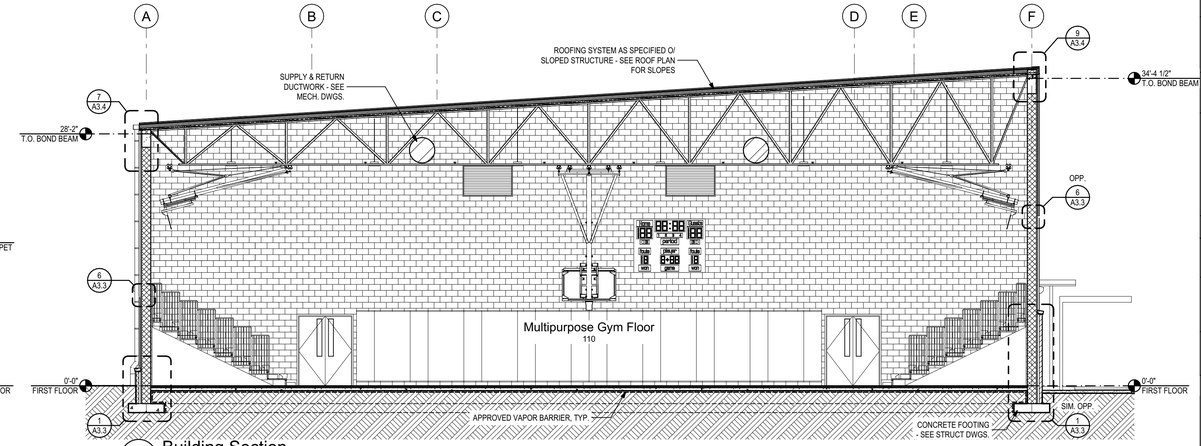

G Building Section
1/8" = 1'-0"

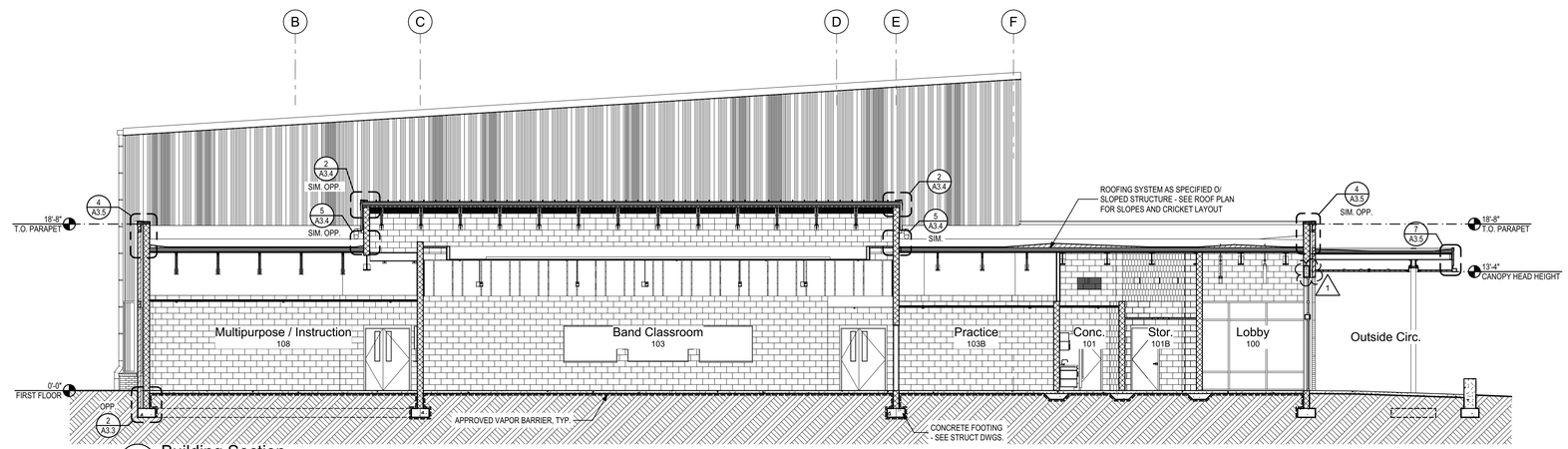

F Building Section
1/8" = 1'-0"

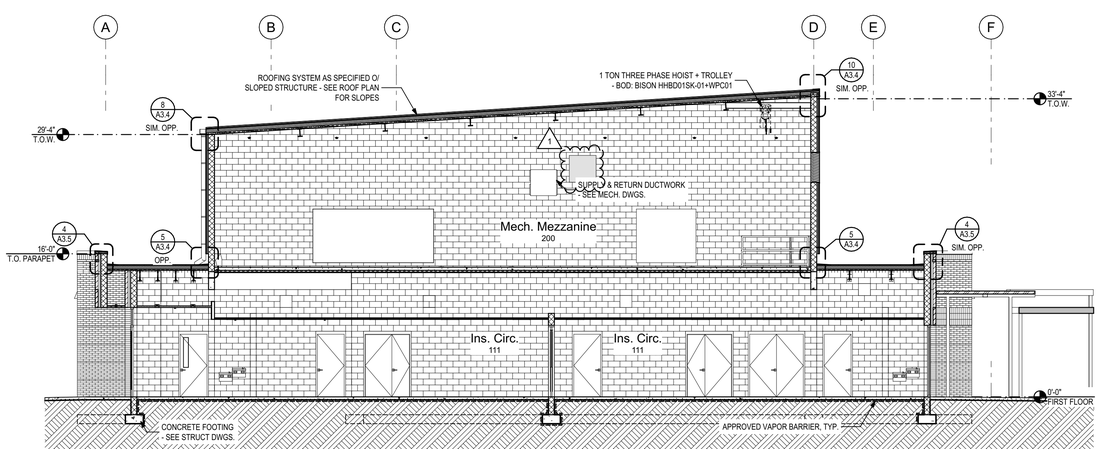

E Building Section
1/8" = 1'-0"

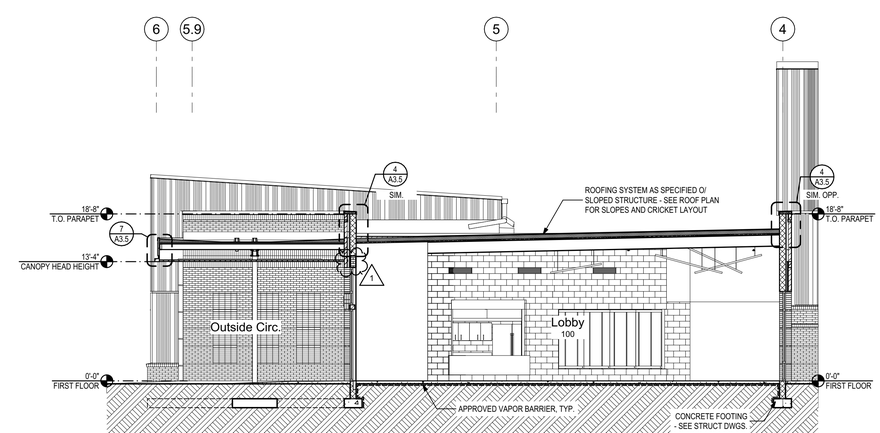

D Building Section
1/8" = 1'-0"

PHASE:	DRAWN:	REVIEWED:	DATE:	ID:	REVISION:	DRAWN:	REVIEWED:	DATE:
CONCEPT SCHEM. DESIGN	BG / RS	C. WHITLOCK	10/18/2024	1	Addendum #1	BG	RL	06/03/2025
DESIGN DEVELOPMENT	BG/KS/RS/MS	C. WHITLOCK	12/20/2024					
EARLY DEMOLITION PACKAGE	BG/RS/MS	R. LEWIS	03/21/2025					
80% CONSTRUCTION DOCS.	BG/RS/MS	R. LEWIS	05/09/2025					
PERMIT DOCS.	BG/RS/MS	R. LEWIS						
100% CONSTRUCTION DOCS.								

THESE DRAWINGS AND DESIGNS ARE INSTRUMENTS OF SERVICE. THE DRAWINGS AND ASSOCIATED COPIES THEREOF, INCLUDING ELECTRONIC MEDIA AND CADD FILES, ARE THE PROPERTY OF ARCHITECTS LEWIS + WHITLOCK P.A. THEIR USE, REPRESENTATION OR REPRODUCTION FOR ANY PURPOSE EXCEPT BY WRITTEN AGREEMENT WITH THE ARCHITECT IS PROHIBITED. THIS COPYRIGHT NOTIFICATION SHALL BE TRUE AS IF DIRECTLY PLACED ON EACH DRAWING EXHIBIT OR RENDERING ON THIS DOCUMENT AND SHALL NOT BE REMOVED FROM THESE DOCUMENTS

Client: Leon County Schools
3420 W. Tharpe St. Suite 100
Tallahassee, FL 32303

Job Title: Griffin Middle School - Phase 2
800 Alabama St. Tallahassee, FL 32304

Consultant:

Project #: 23483
Phase: 100% CDs

Seal:

Architects Lewis + Whitlock
206 West Virginia St.
Tallahassee, Florida 32301
850.942.1718
www.think3d.net

Description:
Building Sections

Sheet No.:
A3.2

BIMcloud: architectslw - BIMcloud Software as a Service/23483 - BIM Griffin Middle School Phase 2

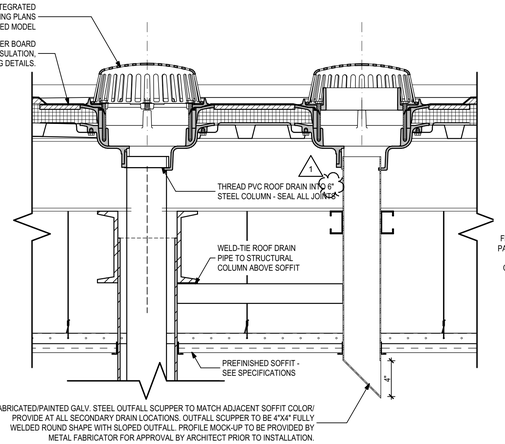

10 Detail At Downspout Column / Canopy Roof Overflow Drain
1 1/2"= 1'-0"

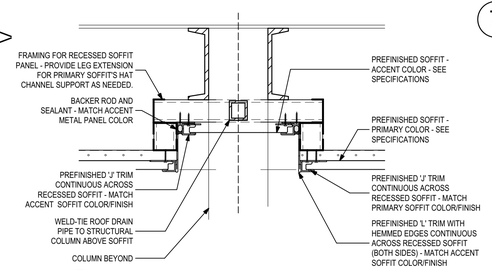

11 Detail At Recessed Soffit
1 1/2"= 1'-0"

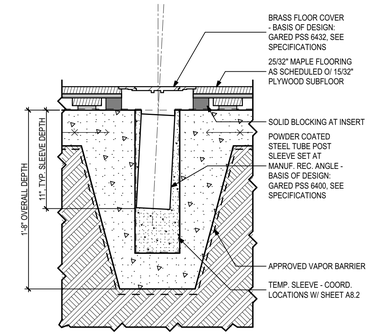

7 Gym Floor Section Detail At Inserts
1 1/2"= 1'-0"

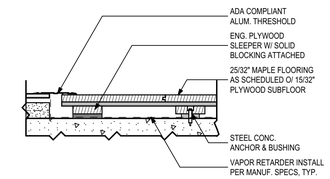

5 Gym Floor Section Detail At Tile Transition
1 1/2"= 1'-0"

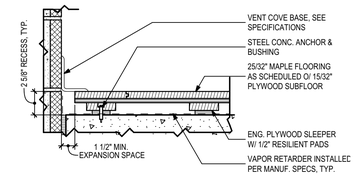

8 Gym Floor Section Detail At Wall Base
1 1/2"= 1'-0"

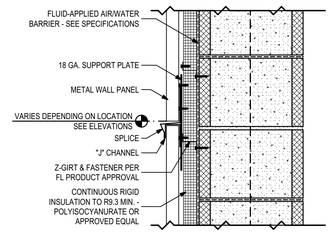

6 Typical Splice Detail
1 1/2"= 1'-0"

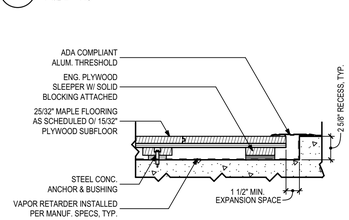

4 Gym Floor Section Detail At LVT Transition
1 1/2"= 1'-0"

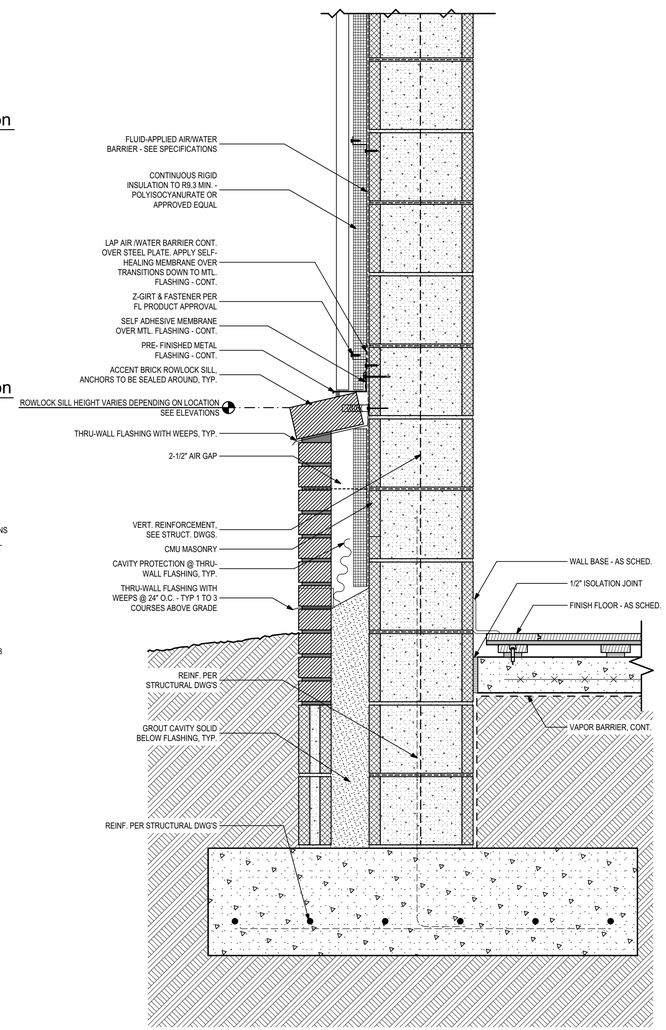

1 Typical Foundation Detail At Metal Wall Panel Transition
1 1/2"= 1'-0"

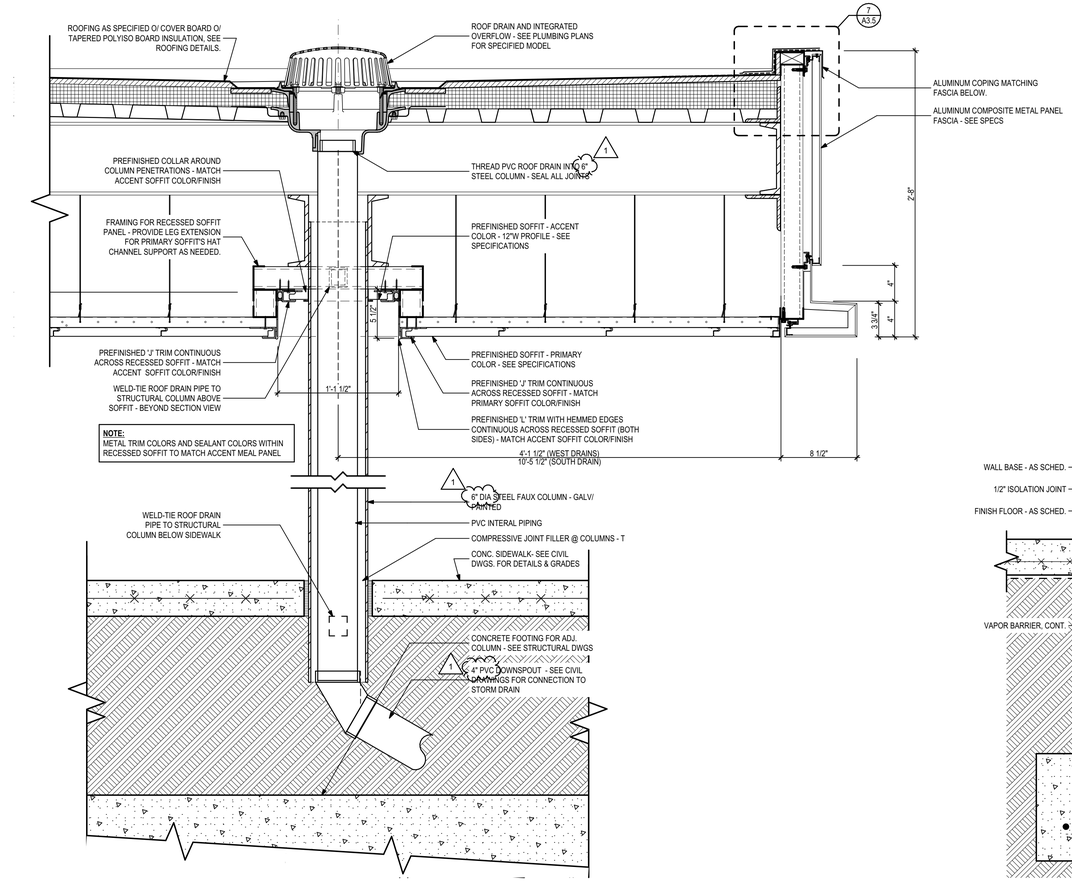

3 Section Detail At Downspout Column / Canopy Roof Drain
1 1/2"= 1'-0"

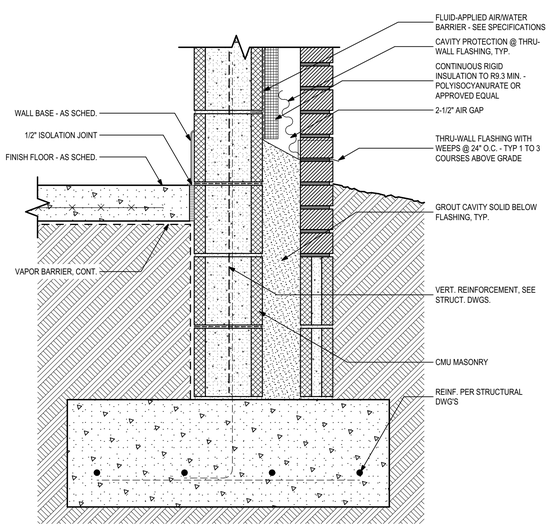

2 Typical Foundation Detail At Grade
1 1/2"= 1'-0"

PHASE:	DRAWN:	REVIEWED:	DATE:	ID:	REVISION:	DRAWN:	REVIEWED:	DATE:
CONCEPT SCHEM. DESIGN	BG / RS	C. WHITLOCK	10/18/2024	1	Addendum #1	BG	RL	06/03/2025
DESIGN DEVELOPMENT	BG/KS/RS/MS	C. WHITLOCK	12/20/2024					
EARLY DEMOLITION PACKAGE	BG/RS/MS	R. LEWIS	03/21/2025					
80% CONSTRUCTION DOCS.	BG/RS/MS	R. LEWIS	05/09/2025					
PERMIT DOCS.	BG/RS/MS	R. LEWIS	05/09/2025					
100% CONSTRUCTION DOCS.	BG/RS/MS	R. LEWIS	05/09/2025					

THESE DRAWINGS AND REDRAWINGS ARE INSTRUMENTS OF SERVICE. THE DRAWINGS AND ASSOCIATED COPIES THEREOF, INCLUDING ELECTRONIC MEDIA AND CADD FILES, ARE THE PROPERTY OF ARCHITECTS LEWIS + WHITLOCK P.A.; THEIR USE, REPRESENTATION OR REPRODUCTION FOR ANY PURPOSE EXCEPT BY WRITTEN AGREEMENT WITH THE ARCHITECT IS PROHIBITED. THIS COPYRIGHT NOTIFICATION SHALL BE TRUE AS IF DIRECTLY PLACED ON EACH DRAWING EXHIBIT OR RENDERING ON THIS DOCUMENT AND SHALL NOT BE REMOVED FROM THESE DOCUMENTS

Client: Leon County Schools
3420 W. Tharpe St., Suite 100
Tallahassee, FL 32303

Job Title: Griffin Middle School - Phase 2
800 Alabama St. Tallahassee, FL 32304

Consultant:

Project #: 23483
Phase: 100% CDs

Seal:

ALW
Architects Lewis + Whitlock
206 West Virginia St.
Tallahassee, Florida 32301
850.942.1718
www.think3d.net

Description:
Foundation & Section Details

Sheet No.:
A3.3

BIMcloud: architectslw - BIMcloud Software as a Service/23483 - BIM Griffin Middle School Phase 2

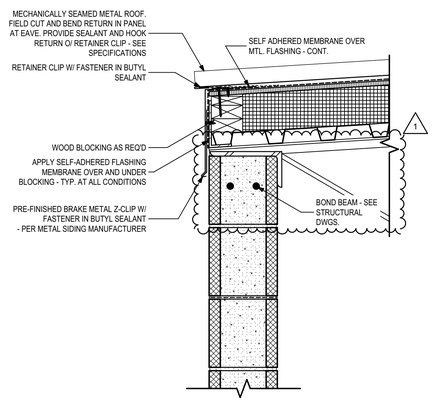

5 Low Roof Section Detail @ Flam. Stor. Building
1 1/2"= 1'-0"

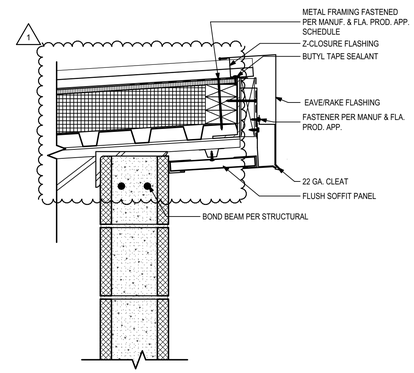

6 High Roof Section Detail @ Flam. Stor. Building
1 1/2"= 1'-0"

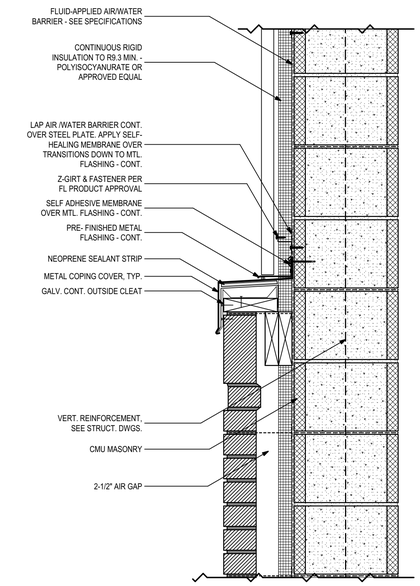

4 Roof Transition Section Detail
1 1/2"= 1'-0"

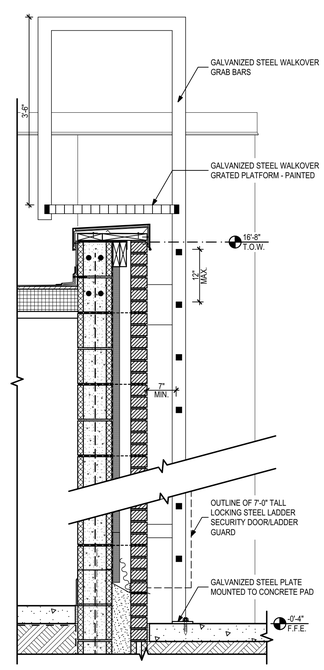

3 Roof Access Ladder Section Detail
3/4" = 1'-0"

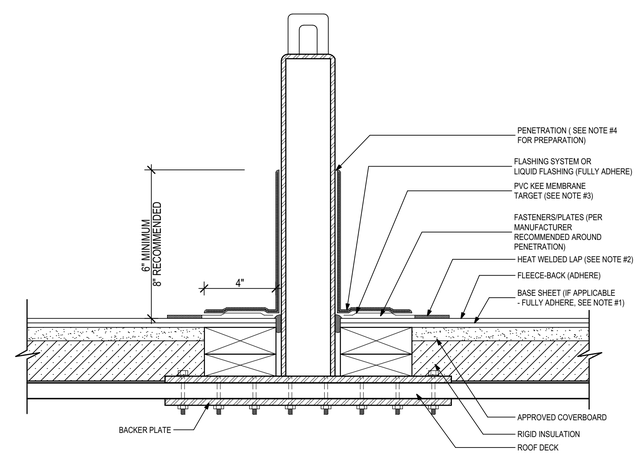

NOTES:
1. BASE SHEET SHOULD BE SEALED USING MANUFACTURER'S SEALANT FOR EXPOSED BASE IN PHASE CONSTRUCTION INSTALLATIONS.
2.FOR HEAT-WELDING LAPS USE 1.5" MIN. WELD WITH AUTOMATIC MACHINE WELDER AND 2" MIN. WELD WITH HAND WELDER.
3.FLASHING MEMBRANE IS REQUIRED AT LOCATIONS TO RECEIVE LIQUID FLASHING SYSTEMS.
4.REFER TO MANUFACTURER PREPARATION GUIDELINES FOR PROPER SURFACE TREATMENT OF ALL MATERIALS PRIOR TO APPLICATION OF LIQUID FLASHING MATERIALS.
5.THE CARPENTRY AND METAL WORK SHOWN DEPICT SHOP FABRICATION AND JOB-SITE ASSEMBLY. THESE COMPONENTS SHOULD BE DESIGNED/ FABRICATED/INSTALLED ACCORDING TO GENERALLY ACCEPTED INDUSTRY PRACTICES, STANDARDS, AND APPROVALS.
6.PENETRATIONS TO RECEIVE THE RIGID FLASHING SYSTEM OR LIQUID FLASHING MUST BE SECURED TO THE STRUCTURE TO PREVENT MOVEMENT.
7.REQUIREMENTS AND RECOMMENDATIONS DETAILED IN CURRENT MANUFACTURER SPECIFICATIONS SHALL APPLY IN ADDITION TO THE ABOVE DRAWING.

CAUTION: ALL PRACTICES PERTAINING TO NRCA CERTA GUIDELINES BE FOLLOWED WHEN TORCHING METHODS ARE EMPLOYED. THIS INCLUDES PERFORMING A FIRE WATCH FOLLOWING ANY TORCH APPLICATIONS. ALWAYS HAVE APPROVED FIRE-EXTINGUISHING EQUIPMENT NEARBY.

2 Roof Anchor Penetration Detail
3" = 1'-0"

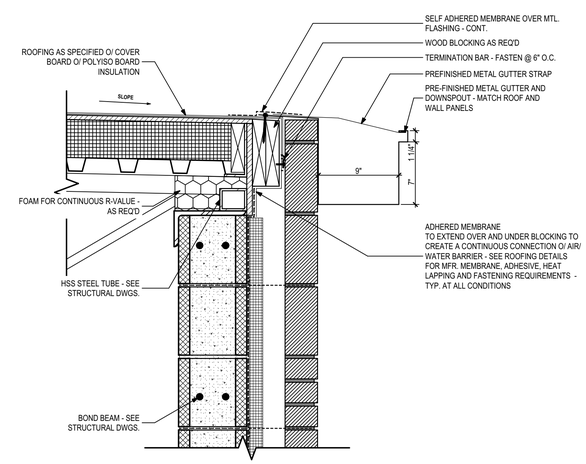

1 Typical Roof Detail @ Spillover Edge
1 1/2"= 1'-0"

PHASE:	DRAWN:	REVIEWED:	DATE:
CONCEPT SCHEM. DESIGN	BG / RS	C. WHITLOCK	10/18/2024
DESIGN DEVELOPMENT	BG/KS/RS/MS	C. WHITLOCK	12/20/2024
EARLY DEMOLITION PACKAGE			
80% CONSTRUCTION DOCS.	BG/RS/MS	R. LEWIS	03/21/2025
PERMIT DOCS.			
100% CONSTRUCTION DOCS.	BG/RS/MS	R. LEWIS	05/09/2025

ID:	REVISION:	DRAWN:	REVIEWED:	DATE:
1	Addendum #1	BG	RL	06/03/2025

THESE DRAWINGS AND DESIGNS ARE INSTRUMENTS OF SERVICE. THE DRAWINGS AND ASSOCIATED COPIES THEREOF, INCLUDING ELECTRONIC MEDIA AND CADD FILES, ARE THE PROPERTY OF ARCHITECTS LEWIS + WHITLOCK, P.A. THEIR USE, REPRESENTATION OR REPRODUCTION FOR ANY PURPOSE EXCEPT BY WRITTEN AGREEMENT WITH THE ARCHITECT IS PROHIBITED. THIS COPYRIGHT NOTIFICATION SHALL BE TRUE AS IF DIRECTLY PLACED ON EACH DRAWING EXHIBIT OR RENDERING ON THIS DOCUMENT AND SHALL NOT BE REMOVED FROM THESE DOCUMENTS

Client:
Leon County Schools
3420 W. Tharpe St. Suite 100
Tallahassee, FL 32303

Job Title:
Griffin Middle School - Phase 2
800 Alabama St. Tallahassee, FL 32304

Consultant:

Project #: 23483
Phase: 100% CDs

Seal:

ALW
Architects Lewis + Whitlock
206 West Virginia St.
Tallahassee, Florida 32301
850.942.1718
www.think3d.net

Description:
Roof Section Details

Sheet No.:
A3.6

BIMcloud: architectslw - BIMcloud Software as a Service/23483 - BIM Griffin Middle School Phase 2

Casework Sections

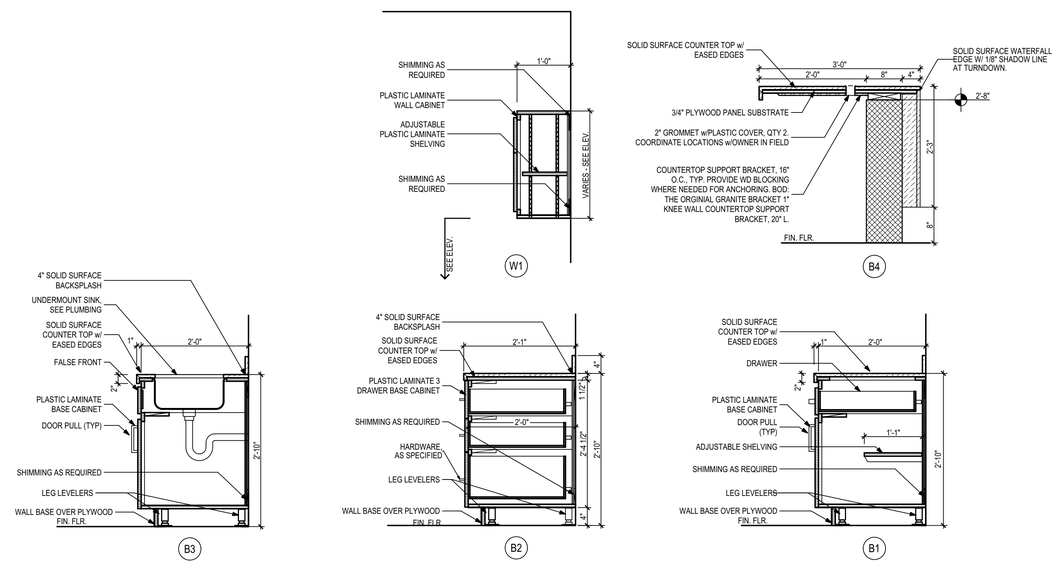

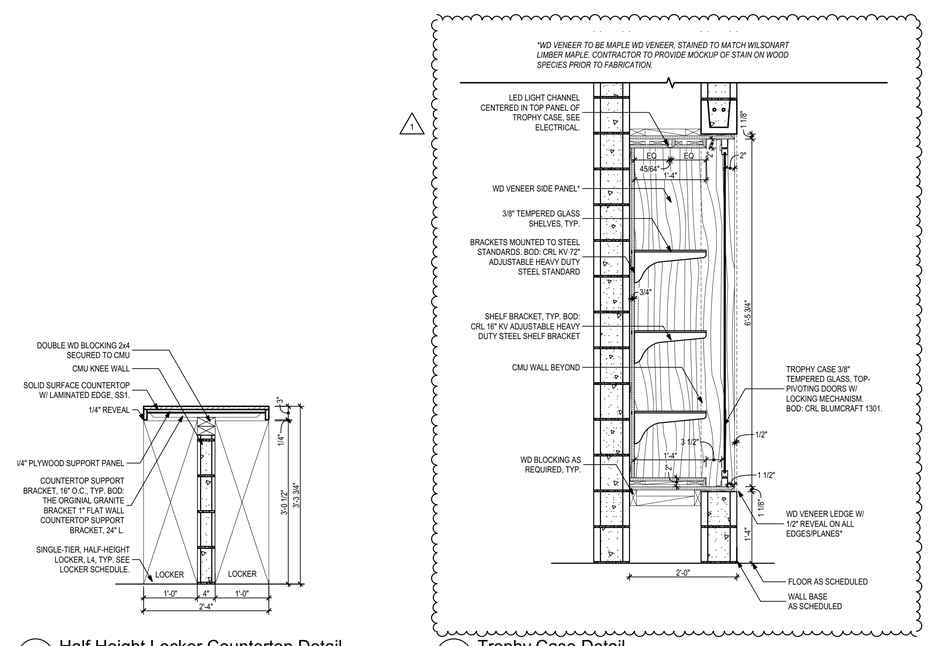

2 Half Height Locker Countertop Detail
3/4" = 1'-0"

1 Trophy Case Detail
3/4" = 1'-0"

PHASE:	DRAWN:	REVIEWED:	DATE:	ID:	REVISION:	DRAWN:	REVIEWED:	DATE:
CONCEPT SCHEM. DESIGN	BG / RS	C. WHITLOCK	10/18/2024	1	Addendum #1	MS	RL	06/03/2025
DESIGN DEVELOPMENT	BG/KS/RS/MS	C. WHITLOCK	12/20/2024					
EARLY DEMOLITION PACKAGE	BG/RS/MS	R. LEWIS	03/21/2025					
80% CONSTRUCTION DOCS.	BG/RS/MS	R. LEWIS	05/09/2025					
PERMIT DOCS.								
100% CONSTRUCTION DOCS.	BG/RS/MS	R. LEWIS	05/09/2025					

THESE DRAWINGS AND DESIGNS ARE INSTRUMENTS OF SERVICE. THE DRAWINGS AND ASSOCIATED COPIES THEREOF, INCLUDING ELECTRONIC MEDIA AND CADD FILES, ARE THE PROPERTY OF ARCHITECTS LEWIS + WHITLOCK, P.A.; THEIR USE, REPRESENTATION OR REPRODUCTION FOR ANY PURPOSE EXCEPT BY WRITTEN AGREEMENT WITH THE ARCHITECT IS PROHIBITED. THIS COPYRIGHT NOTIFICATION SHALL BE TRUE AS IF DIRECTLY PLACED ON EACH DRAWING EXHIBIT OR RENDERING ON THIS DOCUMENT AND SHALL NOT BE REMOVED FROM THESE DOCUMENTS

Client:
Leon County Schools
3420 W. Tharpe St. Suite 100
Tallahassee, FL 32303

Job Title:
Griffin Middle School - Phase 2
800 Alabama St. Tallahassee, FL 32304

Consultant:

Project #: 23483
Phase: 100% CDs

Seal:

ALW
Architects Lewis + Whitlock
206 West Virginia St.
Tallahassee, Florida 32301
850.942.1718
www.think3d.net

Description:
Interior Casework Details

Sheet No.:
A5.7

BIMcloud: architectslw - BIMcloud Software as a Service/23483 - BIM Griffin Middle School Phase 2

Door and Window Elevations

1/4" = 1'-0"

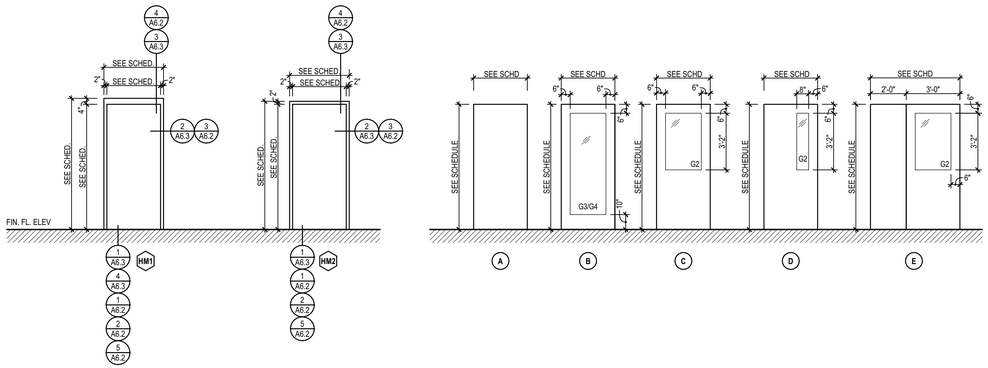

GLAZING SCHEDULE

G1	1" INSUL./TEMPERED
G2	1/4" CLASS "1" CPSC 16 CFR PART 1201 SAFETY GLAZING
G3	1/4" INSUL./ CLASS "II" CPSC 16 CFR PART 1201 SAFETY GLAZING
G4	1" INSUL./ CLASS "II" CPSC 16 CFR PART 1201 SAFETY GLAZING
G5	1/4" TEMPERED SAFETY GLAZING

NOTES:
1. ALL EXTERIOR HM FRAMES TO BE GALVANEALED STEEL
2. ALL EXTERIOR GLAZING TO BE TINTED PER SPECS (INCLUDING DOORS).
3. ALL INTERIOR GLAZING TO BE CLEAR

NOTE:

BASIS OF DESIGN PRODUCT SPECIFIED FOR EXTERIOR GLAZING PROVIDES THE FOLLOWING METRICS MEETING/EXCEEDING MIN. REQ. OF THE FBC-ENERGY CODE:

FIXED GLAZING U-FACTOR = 0.47 < 0.50 REQ.
SOLAR HEAT GAIN COEFFICIENT = 0.28 < 0.40 SEW & <0.33 N

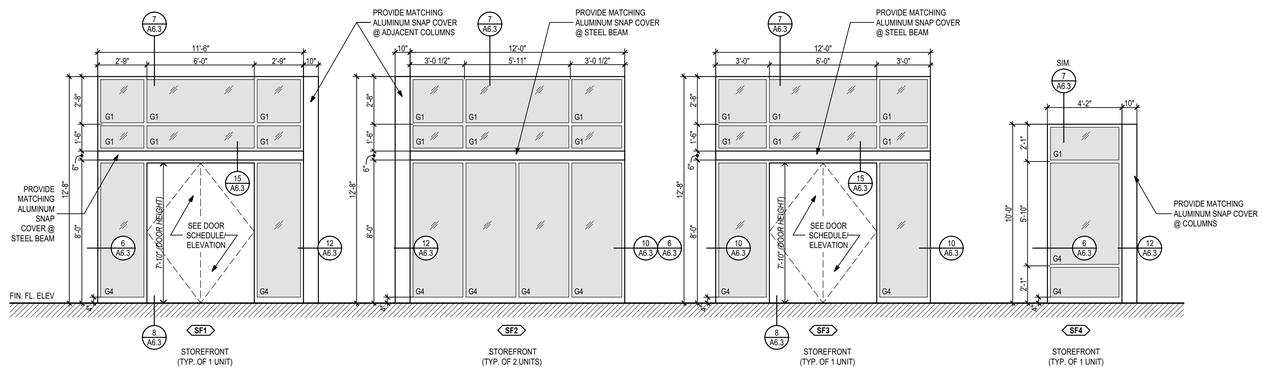

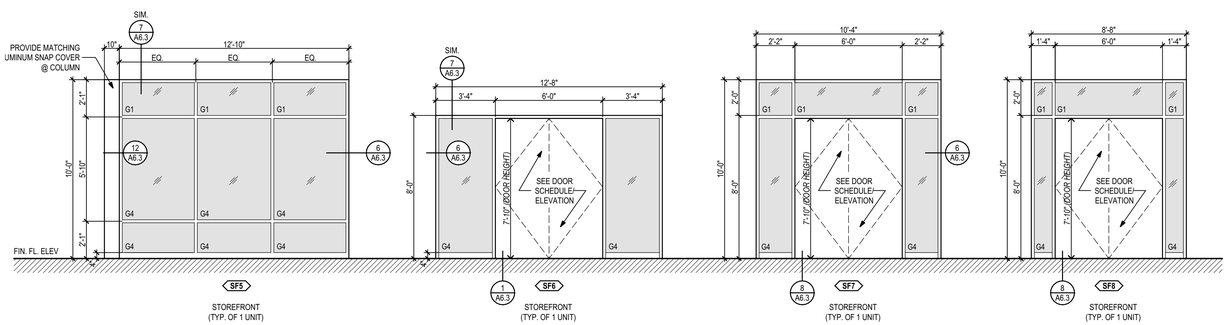

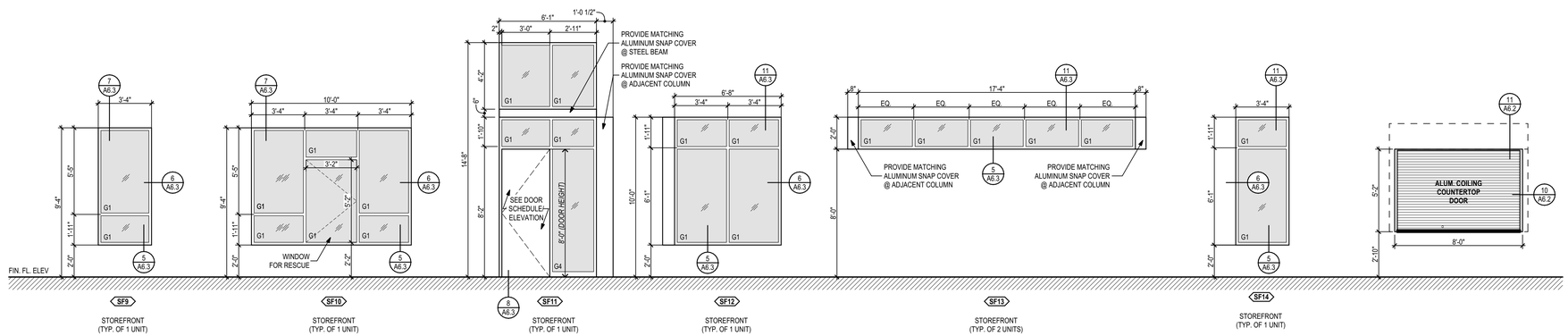

Door Schedule

DOOR NO.	ROOM NAME	LOCATION	ELEVATION	W	HT	MATERIAL	FINISH	FRAME ELEVATION	FRAME DETAIL HEAD	FRAME DETAIL JAMB	FRAME DETAIL SILL	FRAME MATERIAL	FRAME FINISH	FIRE RATING	HARDWARE	NOTES
D0100	Flam. Stor.	Exterior	A PAIR	6'-0"	7'-0"	HM	PT-3	HM1	3/A6.3 SIM.	2/A6.3 SIM.	4/A6.3 SIM.	HM	PT-3	FIRE 45 MIN.	05	
D100A	Lobby	Exterior	B PAIR	6'-0"	7'-10"	ALUM/GL	ANOD.	SF3	14/A6.3	13/A6.3	1/A6.3	ALUM	ANOD.		01	CARD READER
D100B	Lobby	Exterior	B PAIR	6'-0"	7'-10"	ALUM/GL	ANOD.	SF1	14/A6.3	13/A6.3	1/A6.3	ALUM	ANOD.		01	CARD READER
D100C	Inside Circ.	Exterior	B PAIR	6'-0"	7'-10"	ALUM/GL	ANOD.	SF8	/A6.3	13/A6.3	1/A6.3	ALUM	ANOD.		01	CARD READER
D101	Lobby	Interior	A	3'-0"	7'-0"	HM	PT-3	HM1	4/A6.2	3/A6.2	2/A6.2	HM	PT-3		20	
D101A	Stor.	Interior	A	3'-0"	7'-0"	HM	PT-5	HM1	4/A6.2	3/A6.2	2/A6.2	HM	PT-5	SMOKE	16	
D101B	Stor.	Interior	A	3'-0"	7'-0"	HM	PT-5	HM1	4/A6.2	3/A6.2	2/A6.2	HM	PT-5		17	
D101C	Concessions	Interior	OVERHEAD	8'-0"	5'-4"	HM	FACT.		11/A6.2	10/A6.2	-	HM	PT		26	
D102	I.T.	Interior	A	3'-0"	7'-0"	HM	PT-5	HM1	4/A6.2	3/A6.2	1/A6.2	HM	PT-5	SMOKE	18	CARD READER
D103	Inside Circ.	Interior	D UNEVEN PR	5'-0"	7'-0"	HM/GL	PT-5	HM1	4/A6.2	3/A6.2	1/A6.2	HM	PT-5	SMOKE	08	CARD READER
D103A	Unif. Storage	Interior	D UNEVEN PR	5'-0"	7'-0"	HM	PT-5	HM1	4/A6.2	3/A6.2	1/A6.2	HM	PT-5		13	
D103B	Band Classr...	Interior	C	3'-0"	7'-0"	HM/GL	PT-5	HM1	4/A6.2	3/A6.2	2/A6.2	HM	PT-5		25	
D103C	Band Classr...	Interior	C	3'-0"	7'-0"	HM/GL	PT-5	HM1	4/A6.2	3/A6.2	2/A6.2	HM	PT-5		25	
D103D	Ref. Room	Interior	A	3'-0"	7'-0"	HM	PT-5	HM1	4/A6.2	3/A6.2	2/A6.2	HM	PT-5		17	
D103E	Band Classr...	Exterior	B	3'-0"	8'-0"	ALUM/GL	ANOD.	SF11	14/A6.3 SIM.	13/A6.3	1/A6.3	ALUM	ANOD.		02	CARD READER
D104	RR - F	Interior	A	3'-0"	7'-0"	HM	PT-3	HM1	4/A6.2	3/A6.2	2/A6.2	HM	PT-3		24	
D105	Inside Circ.	Interior	A	3'-0"	7'-0"	HM	PT-3	HM1	4/A6.2	3/A6.2	2/A6.2	HM	PT-3	SMOKE	19	
D106	RR - Fam.	Interior	A	3'-0"	7'-0"	HM	PT-3	HM1	4/A6.2	3/A6.2	2/A6.2	HM	PT-3		23	
D107	RR - M	Interior	A	3'-0"	7'-0"	HM	PT-3	HM1	4/A6.2	3/A6.2	2/A6.2	HM	PT-3		24	
D108	Inside Circ.	Interior	D UNEVEN PR	5'-0"	7'-0"	HM/GL	PT-3	HM1	4/A6.2	3/A6.2	1/A6.2	HM	PT-3	SMOKE	08	CARD READER
D109	Mech.	Exterior	A PAIR	6'-0"	7'-0"	HM	PT-3	HM1	3/A6.3	2/A6.3	4/A6.3	HM	PT-3		03	INS., CARD READER
D110A	Inside Circ.	Interior	D PAIR	6'-0"	7'-10"	HM/GL	PT-3	HM2	4/A6.2	3/A6.2	1/A6.2	HM	PT-3	SMOKE	07	2 SETS
D110B	Inside Circ.	Interior	D PAIR	6'-0"	7'-10"	HM/GL	PT-3	HM2	4/A6.2	3/A6.2	1/A6.2	HM	PT-3	SMOKE	07	2 SETS
D110C	Ins. Circ.	Interior	D PAIR	6'-0"	7'-10"	HM/GL	PT-3	HM2	4/A6.2	3/A6.2	1/A6.2	HM	PT-3	SMOKE	07	
D110D	Ins. Circ.	Interior	D PAIR	6'-0"	7'-10"	HM/GL	PT-3	HM2	4/A6.2	3/A6.2	1/A6.2	HM	PT-3	SMOKE	07	
D111A	Ins. Circ.	Exterior	B PAIR	6'-0"	7'-10"	ALUM/GL	ANOD.	SF6	14/A6.3 SIM.	13/A6.3	1/A6.3	ALUM	ANOD.		01	CARD READER
D111B	Ins. Circ.	Exterior	B PAIR	6'-0"	7'-10"	ALUM/GL	ANOD.	SF7	14/A6.3 SIM.	13/A6.3	1/A6.3	ALUM	ANOD.		01	CARD READER
D111C	Ins. Circ.	Interior	D PAIR	6'-0"	7'-10"	HM/GL	PT-5	HM2	4/A6.2	3/A6.2	2/A6.2	HM	PT-5	SMOKE	09	
D112	Ins. Circ.	Interior	A	3'-0"	7'-0"	HM	PT-3	HM1	4/A6.2	3/A6.2	2/A6.2	HM	PT-3	SMOKE	14	
D112A	Laundry	Interior	A	3'-0"	7'-0"	HM	PT-5	HM1	4/A6.2	3/A6.2	2/A6.2	HM	PT-5		16	
D112B	P.E. Teache...	Interior	C	3'-0"	7'-0"	HM/GL	PT-5	HM1	4/A6.2	3/A6.2	2/A6.2	HM	PT-5		17	
D112C	Shwr. - F	Interior	A	3'-0"	7'-0"	HM	PT-5	HM1	4/A6.2	3/A6.2	1/A6.2	HM	PT-5		22	
D112E	P.E. Shwr. - F	Interior	A	3'-0"	7'-0"	HM	PT-5	HM1	4/A6.2	3/A6.2	1/A6.2	HM	PT-5		21	
D112F	Vestibule	Interior	A	3'-0"	7'-0"	HM	PT-5	HM1	4/A6.2	3/A6.2	2/A6.2	HM	PT-5	SMOKE	15	
D112G	Vestibule	Exterior	A	3'-0"	7'-0"	HM	PT-3	HM1	3/A6.3	2/A6.3	1/A6.3	HM	PT-3	FIRE 45 MIN.	06	INS., CARD READER
D113	Ins. Circ.	Interior	A PAIR	6'-0"	7'-0"	HM	PT-5	HM1	4/A6.2	3/A6.2	1/A6.2	HM	PT-5	SMOKE	10	CARD READER
D114	P.E. Equip. - F	Interior	A UNEVEN PR	5'-0"	7'-0"	HM	PT-5	HM1	4/A6.2	3/A6.2	2/A6.2	HM	PT-5	SMOKE	12	
D115	P.E. Equip. -...	Interior	A UNEVEN PR	5'-0"	7'-0"	HM	PT-5	HM1	4/A6.2	3/A6.2	2/A6.2	HM	PT-5	SMOKE	12	
D116	Ins. Circ.	Interior	A	3'-0"	7'-0"	HM	PT-3	HM1	4/A6.2	3/A6.2	2/A6.2	HM	PT-3	SMOKE	14	
D116A	Laundry	Interior	A	3'-0"	7'-0"	HM	PT-5	HM1	4/A6.2	3/A6.2	2/A6.2	HM	PT-5		16	
D116B	P.E. Teache...	Interior	C	3'-0"	7'-0"	HM/GL	PT-5	HM1	4/A6.2	3/A6.2	2/A6.2	HM	PT-5		17	
D116C	Shwr. - M	Interior	A	3'-0"	7'-0"	HM	PT-5	HM1	4/A6.2	3/A6.2	1/A6.2	HM	PT-5		22	
D116E	P.E. Shwr. - M	Interior	A	3'-0"	7'-0"	HM	PT-5	HM1	4/A6.2	3/A6.2	1/A6.2	HM	PT-5		21	
D116F	Vestibule	Interior	A	3'-0"	7'-0"	HM	PT-5	HM1	4/A6.2	3/A6.2	2/A6.2	HM	PT-5	SMOKE	15	
D116G	Vestibule	Exterior	A	3'-0"	7'-0"	HM	PT-3	HM1	3/A6.3	2/A6.3	1/A6.3	HM	PT-3	FIRE 45 MIN.	06	INS., CARD READER
D117	Ins. Circ.	Interior	D	3'-0"	7'-0"	HM/GL	PT-5	HM1	4/A6.2	3/A6.2	1/A6.2	HM	PT-5	SMOKE	16	
D117A	First Aid	Interior	D	3'-0"	7'-0"	HM/GL	PT-5	HM1	4/A6.2	3/A6.2	2/A6.2	HM	PT-5		17	
D118	Elec.	Exterior	A PAIR	6'-0"	7'-0"	HM	PT-3	HM1	3/A6.3	2/A6.3	4/A6.3	HM	PT-3		04	INS., CARD READER
D119	Ins. Circ.	Interior	A	3'-0"	7'-0"	HM	PT-5	HM1	4/A6.2	3/A6.2	2/A6.2	HM	PT-5	SMOKE	20	
D200	Mech. Mezz.	Exterior	A PAIR	6'-0"	7'-0"	HM	PT-5	HM1	10/A6.3	9/A6.3	-	HM	PT-5		03	INS., CARD READER

1 1

ABBREVIATION LEGEND:

HM	HOLLOW METAL (SEE FRAME ELEVATIONS OR SPECS FOR TYPE)
ALUM	ALUMINUM
SF-	STOREFRONT
ANOD	ANODIZED (SEE SPECS FOR TYPE/COLOR)
PT	PAINT (OVER FACTORY PRIME PER SPEC)

PHASE:	DRAWN:	REVIEWED:	DATE:	ID:	REVISION:	DRAWN:	REVIEWED:	DATE:
CONCEPT SCHEM. DESIGN	BG / RS	C. WHITLOCK	10/18/2024	1	Addendum #1	MS	RL	06/03/2025
DESIGN DEVELOPMENT	BG/KS/RS/MS	C. WHITLOCK	12/20/2024					
EARLY DEMOLITION PACKAGE	BG/RS/MS	R. LEWIS	03/21/2025					
80% CONSTRUCTION DOCS.	BG/RS/MS	R. LEWIS	05/09/2025					
PERMIT DOCS.	BG/RS/MS	R. LEWIS						
100% CONSTRUCTION DOCS.								

THESE DRAWINGS AND DESIGNS ARE INSTRUMENTS OF SERVICE. THE DRAWINGS AND ASSOCIATED COPIES THEREOF, INCLUDING ELECTRONIC MEDIA AND CADD FILES, ARE THE PROPERTY OF ARCHITECTS LEWIS + WHITLOCK P.A. THEIR USE, REPRESENTATION OR REPRODUCTION FOR ANY PURPOSE EXCEPT BY WRITTEN AGREEMENT WITH THE ARCHITECT IS PROHIBITED. THIS COPYRIGHT NOTIFICATION SHALL BE TRUE AS IF DIRECTLY PLACED ON EACH DRAWING EXHIBIT OR RENDERING ON THIS DOCUMENT AND SHALL NOT BE REMOVED FROM THESE DOCUMENTS

Client: LEON COUNTY SCHOOLS

Leon County Schools
3420 W. Tharpe St., Suite 100
Tallahassee, FL 32303

Consultant:

Job Title: Griffin Middle School - Phase 2
800 Alabama St. Tallahassee, FL 32304

Project #: 23483
Phase: 100% CDs

Seal:

ALW
Architects Lewis + Whitlock
206 West Virginia St.
Tallahassee, Florida 32301
850.942.1718
www.think3d.net

Description:
Door Schedules and Elevations

Sheet No.:
A6.1

BIMcloud: architectslw - BIMcloud Software as a Service/23483 - BIM Griffin Middle School Phase 2

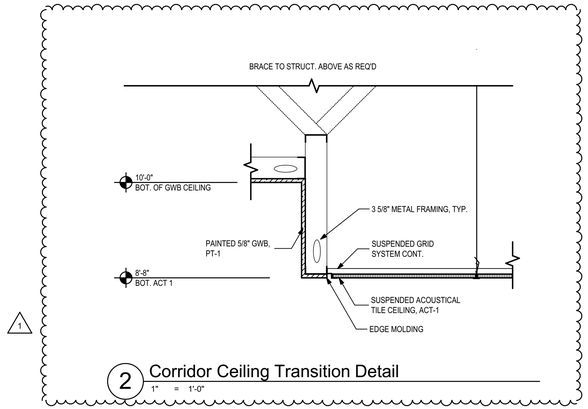

2 Corridor Ceiling Transition Detail
1" = 1'-0"

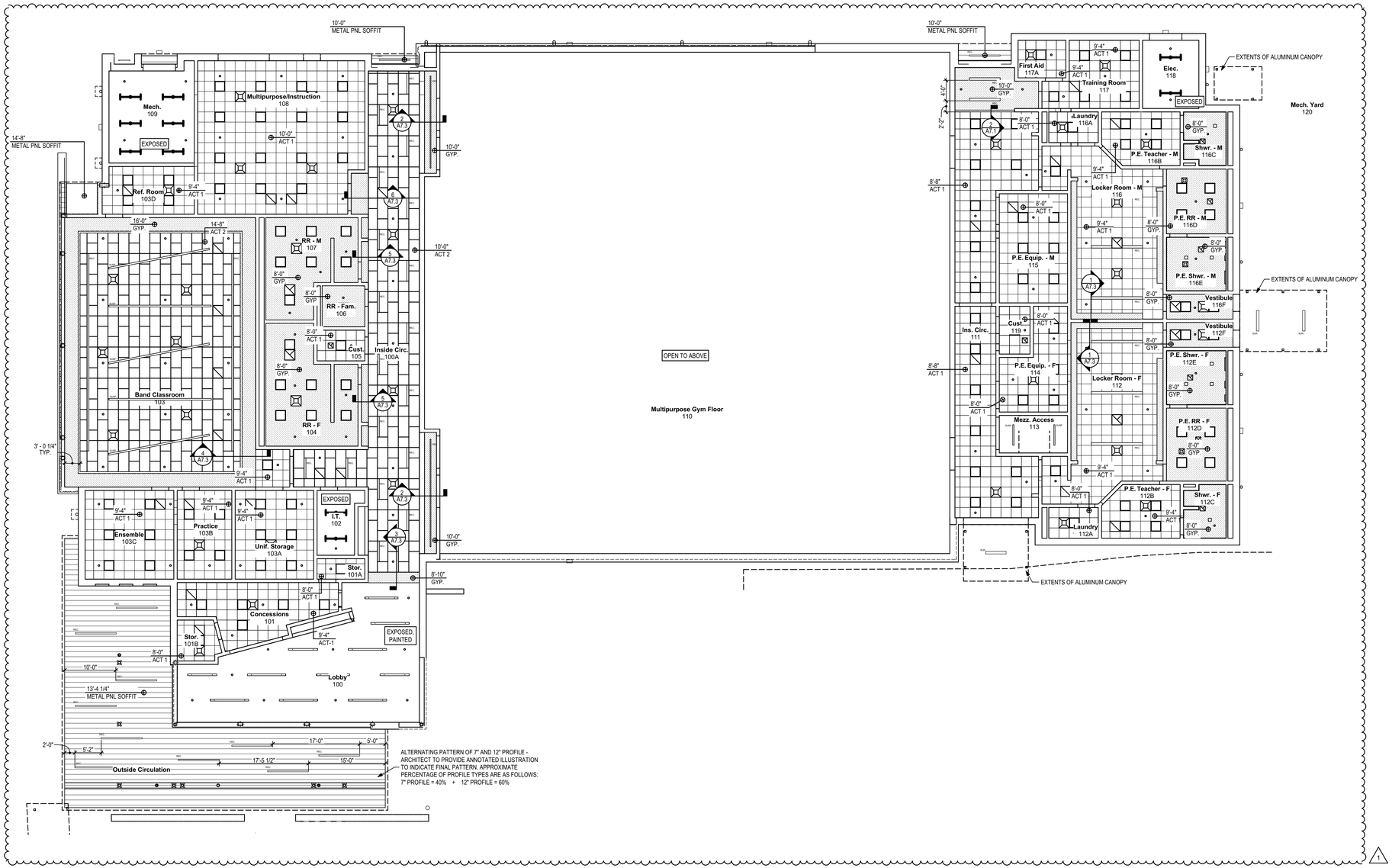

1 New Gymnasium First Floor Reflected Ceiling Plan
3/32" = 1'-0"

Ceiling Finish Legend

	GYP	GYPSUM BOARD
	ACT 1	ACOUSTICAL CEILING TILE
	ACT 2	ACOUSTICAL CEILING TILE
	EXP	EXPOSED
	METAL PNL	METAL PANEL CEILING SYSTEM

Ceiling Fixture Legend

	SUSPENDED/SURFACE MOUNTED/RECESSED LINEAR FIXTURE. SEE ELECTRICAL FOR SIZING & MOUNT STYLE.
	2' x 2' LED FLAT PANEL
	SQUARE RETURN
	SQUARE AIR DIFFUSER
	SQUARE EXHAUST FAN
	HIGH BAY LIGHT FIXTURE
	UTILITY LIGHT FIXTURE
	SPRINKLER HEAD

Key Plan

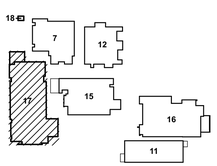

PHASE:	DRAWN:	REVIEWED:	DATE:	ID:	REVISION:	DRAWN:	REVIEWED:	DATE:
CONCEPT SCHEM. DESIGN	BG / RS	C. WHITLOCK	10/18/2024	1	Addendum #1	MS	RL	06/03/2025
DESIGN DEVELOPMENT	BG/KS/RS/MS	C. WHITLOCK	12/20/2024					
EARLY DEMOLITION PACKAGE	BG/RS/MS	R. LEWIS	03/21/2025					
80% CONSTRUCTION DOCS.	BG/RS/MS	R. LEWIS	05/09/2025					
PERMIT DOCS.								
100% CONSTRUCTION DOCS.	BG/RS/MS	R. LEWIS	05/09/2025					

THESE DRAWINGS AND REDRAWINGS ARE INSTRUMENTS OF SERVICE. THE DRAWINGS AND ASSOCIATED COPIES THEREOF, INCLUDING ELECTRONIC MEDIA AND CADD FILES, ARE THE PROPERTY OF ARCHITECTS LEWIS + WHITLOCK P.A.; THEIR USE, REPRESENTATION OR REPRODUCTION FOR ANY PURPOSE EXCEPT BY WRITTEN AGREEMENT WITH THE ARCHITECT IS PROHIBITED. THIS COPYRIGHT NOTIFICATION SHALL BE TRUE AS IF DIRECTLY PLACED ON EACH DRAWING EXHIBIT OR RENDERING ON THIS DOCUMENT AND SHALL NOT BE REMOVED FROM THESE DOCUMENTS

Client: Leon County Schools
3420 W. Tharpe St. Suite 100
Tallahassee, FL 32303

Job Title: Griffin Middle School - Phase 2
800 Alabama St. Tallahassee, FL 32304

Consultant:

Project #: 23483
Phase: 100% CDs

Seal:

ALW
Architects Lewis + Whitlock
206 West Virginia St.
Tallahassee, Florida 32301
850.942.1718
www.think3d.net

Description:
New Gymnasium First Floor Reflected Ceiling Plan

Sheet No.:
A7.1

BIMcloud: architectslw - BIMcloud Software as a Service/23483 - BIM Griffin Middle School Phase 2

Finish Summary

Mark	Description	Size	Basis of Design	Color	Notes
FLOORS					
CPT-1	Carpet Tile	12" x 48"	Shaw Contract - Convene Tile	Clear System	Install: Stagger. See finish Floor Plan for install direction.
CPT-2	Walk-off Carpet Tile	18" x 36"	Mannington Charge	Kinetic	Install: Ashlar. See Finish Floor Plan for install direction.
CT-1	Ceramic Porcelain Floor Tile - Field	12" x 24"	Crossville Tile - Shades 2.0	Thunder SHD48 UPS/PTN	75% mix unpolished, 25% mix pattern. Random mix install. See install pattern on finish floor plan.
CT-2	Ceramic Porcelain Floor Tile - Mosaic	-	Crossville Civilization Polygon Mosaic	Communique Light Cool Blend	
GR	Grout	-	Mapei	TBS by Architect from MFR full range of products.	
LVT	Luxury Vinyl Tile - Field	12" x 36"	Tarkett Create Expression	TBS by Architect from MFR full range of products.	Install: Stagger. See finish Floor Plan for install direction.
EP	Epoxy Broadcast Flooring System	-	Plexi-Chemi PlexiQuartz	Salt and Pepper	Epoxy to flash up wall for integral wall base.
-	Sealed Concrete	-	W.R. Meadow Yocamp 25 Acrylic Sealer	-	
WD-1	Wood Gym Floor		Aacer Sports Flooring - Anchored PowerSleeper	Infinity MFMA-RL Second and Better Grade Northern Hard Maple w/ approved seal and finish.	
WD-2	Wood Dance Floor		Aacer Sports Flooring - Program Dance IV Floating System	Precision MFMA-RL Second and Better Grade Northern Hard Maple w/ approved seal and finish.	
TRANSITIONS					
MT	Metal Transition	-	Schluter (profiles vary)	TBS by architect	
WALL BASE					
RB-1	Rubber Wall Base - Cove	6" (coils)	Johnsonite Baseworks	TBS by Architect from MFR full range of products.	
RB-2	Rubber Wall Base - Cove	4' Sticks	Johnsonite Vent Cove	Black	
CT-3	Ceramic Tile - Bullnose	-	Crossville Tile - Shades 2.0	Thunder SHD48 Cove Base	
CEILINGS					
ACT-1	Acoustical Panel Ceiling	24" x 24"	Armstrong Ultima Tegular	White	Use with Suprafine 9/16" Exposed Tee
ACT-2	Acoustical Panel Ceiling	24" x 24", 24" x 48"	Armstrong Ultima Tegular	White	Use with Suprafine 9/16" Exposed Tee. See RCP for layout.
GYP	Gypsum Board	-	-	Varies	See RCP & elevations for color directive.
WALLS & TRIM					
PT-1	Field Paint	-	Sherwin Williams A-100 Latex Satin	Pure White	
PT-2	Accent Paint	-	Sherwin Williams A-100 Latex Satin	TBS by Architect from MFR full range of products.	See finish floor plan and elevations for accent paint locations.
PT-3	Accent/Door Panel & Frame Paint	-	Sherwin Williams A-100 Latex Satin	Blueprint	See finish floor plan and elevations for accent paint locations.
PT-4	Accent Paint	-	Sherwin Williams A-100 Latex Satin	TBS by Architect from MFR full range of products.	See finish floor plan and elevations for accent paint locations.
PT-5	Accent/Door Panel & Frame Paint	-	Sherwin Williams A-100 Latex Satin	Online	
EPT-X	Epoxy Paint	-	Sherwin Williams Pro Industrial Water Based Catalyzed Epoxy Gloss, B73-300 Series	-	Match color designation of standard PT colors.
CT-4	Ceramic Porcelain Wall Tile	12" x 24"	Crossville Tile - Shades 2.0	Thunder SHD48 SPO	See elevations for layout.
AWP1	Fabric-Wrapped Wall Panels	Varies	Armstrong Custom Sound Soak	Guilford of Maine, Metallation - Stainless	See elevations for sizing
AWP2	Fabric-Wrapped Wall Panels	Varies	Armstrong Custom Sound Soak	Guilford of Maine, Metallation - Polished Pewter	See elevations for sizing
AWP3	Fabric-Wrapped Wall Panels	Varies	Armstrong Custom Sound Soak	Guilford of Maine, Metallation - Fired Titanium	See elevations for sizing
CASEWORK					
PL	Plastic Laminate *(Cabinets)*	-	Wilsonart High Pressure Laminate	Limber Maple	
ST	Wood Veneer Stain	-	Minwax	Stain to match Wilsonart Limber Maple	Contractor to provide mockup of stain finish on wood species prior to fabrication
SS1	Solid Surface *(Countertops)*		Corian	Domino Terrazo	
SS2	Solid Surface *(Concessions Counter)*	-	Wilsonart	Arctic Drift	

Finish Schedule

ROOM NUMBER	ROOM NAME/ DESCRIPTION	FLOOR		BASE		WALLS		CEILING		REMARKS
		FINISH	NOTES	FINISH	NOTES	FINISH	NOTES	FINISH	NOTES	
100	Lobby	CT/CPT-2		RB-1		EPT-1/EPT-3	3	EXPOSED PAINTED (PT-4)	1	
0100	Flam. Storage	-		-		-		-		
100A	Inside Circ.	CT/CPT-2		RB-1		EPT-1/EPT-3	3	ACT-2 / PT-3 OVER GYP.		
101	Concessions	CT-1		CT-3		EPT-1		ACT-1		
101A	Stor.	CT-1		CT-3		EPT-1		ACT-1		
101B	Stor.	CT-1		CT-3		EPT-1		ACT-1		
102	I.T.	SEALED CONCRETE		RB-1		PT-1		EXPOSED		
103	Band Classroom	CPT-1/LVT		RB-1		EPT-1/EPT-2	3	ACT-2 / PT-1 OVER GYP.		
103A	Unif. Storage	LVT		RB-1		EPT-1		ACT-1		
103B	Practice	CPT-1		RB-1		EPT-1		ACT-1		
103C	Ensemble	CPT-1		RB-1		EPT-1		ACT-1		
103D	Ref. Room	CPT-1		RB-1		EPT-1		ACT-1		
104	RR-F	CT-1		CT-3		EPT-1/EPT-2	3	PT-1 OVER GYP.		
105	Cust.	LVT		RB-1		EPT-1		ACT-1		
106	RR-Fam.	CT-2		CT-3		EPT-1/EPT-2		PT-1 OVER GYP.		
107	RR-M	CT-1		CT-3		EPT-1/EPT-2	3	PT-1 OVER GYP.		
108	Multipurpose/Instruction	WD-2		RB-2		EPT-1/EPT-3	3	ACT-1		
109	Mech.	SEALED CONCRETE		RB-1		PT-1		EXPOSED		
110	Multipurpose Gym Floor	WD-1		RB-2		EPT-1-EPT-3	3	EXPOSED	2	
111	Ins. Circ.	LVT/CPT-2		RB-1		EPT-1/EPT-3	3	ACT-1		
112	Locker Room - F	EP		EP		EPT-1/EPT-4	3	ACT-1		
112A	Laundry	EP		EP		EPT-1		ACT-1		
112B	P.E. Teacher-F	EP		EP		EPT-1		ACT-1		
112C	Shwr.-F	CT-2		-		EPT-1/CT-4		PT-1 OVER GYP.		
112D	P.E. RR-F	EP		EP		EPT-1/EPT-2	3	PT-1 OVER GYP.		
112E	P.E. Shwr.-F	CT-2		-		CT-4		PT-1 OVER GYP.		
112F	Vestibule	EP		EP		EPT-1		ACT-1		
113	Mezz. Access	SEALED CONCRETE		RB-1		PT-1		EXPOSED		
114	P.E. Equip.-F	LVT		RB-1		EPT-1		ACT-1		
115	P.E. Equip.-M	LVT		RB-1		EPT-1		ACT-1		
116	Locker Room - M	EP		EP		EPT-1/EPT-4	3	ACT-1		
116A	Laundry	EP		EP		EPT-1		ACT-1		
116B	P.E. Teacher-M	EP		EP		EPT-1		ACT-1		
116C	Shwr.-M	CT-2		-		EPT-1/CT-4		PT-1 OVER GYP.		
116D	P.E. RR-M	EP		EP		EPT-1/EPT-2	3	PT-1 OVER GYP.		
116E	P.E. Shwr.-M	CT-2		-		CT-4		PT-1 OVER GYP.		
116F	Vestibule	EP		EP		EPT-1		ACT-1		
117	Training Room	LVT		RB-1		EPT-1		ACT-1		
117A	First Aid	LVT		RB-1		EPT-1		ACT-1		
118	Elec.	SEALED CONCRETE		RB-1		PT-1		EXPOSED		
119	Cust.	SEALED CONCRETE		RB-1		EPT-1		ACT-1		
120	Mech. Yard	-		-		-		-		
200	Mech. Mezzanine	SEALED CONCRETE		RB-1		PT-1		EXPOSED		

General Finish Notes:

1. EXPOSED BEAMS TO BE PAINTED PT-4.
2. EXPOSED OPEN WEB TRUSSES TO BE PAINTED PT-5.
3. SEE FINISH FLOOR PLAN & ELEVATIONS FOR ACCENT WALL PAINT LOCATIONS.

PHASE:	DRAWN:	REVIEWED:	DATE:
CONCEPT SCHEM. DESIGN	BG / RS	C. WHITLOCK	10/18/2024
DESIGN DEVELOPMENT	BG/KS/RS/MS	C. WHITLOCK	12/20/2024
EARLY DEMOLITION PACKAGE	BG/RS/MS	R. LEWIS	03/21/2025
80% CONSTRUCTION DOCS.	BG/RS/MS	R. LEWIS	05/09/2025
PERMIT DOCS.			
100% CONSTRUCTION DOCS.	BG/RS/MS	R. LEWIS	05/09/2025

ID:	REVISION:	DRAWN:	REVIEWED:	DATE:
1	Addendum #1	MS	RL	06/03/2025

THESE DRAWINGS AND DESIGNS ARE INSTRUMENTS OF SERVICE. THE DRAWINGS AND ASSOCIATED COPIES THEREOF, INCLUDING ELECTRONIC MEDIA AND CADD FILES, ARE THE PROPERTY OF ARCHITECTS LEWIS + WHITLOCK P.A.; THEIR USE, REPRESENTATION OR REPRODUCTION FOR ANY PURPOSE EXCEPT BY WRITTEN AGREEMENT WITH THE ARCHITECT IS PROHIBITED. THIS COPYRIGHT NOTIFICATION SHALL BE TRUE AS IF DIRECTLY PLACED ON EACH DRAWING EXHIBIT OR RENDERING ON THIS DOCUMENT AND SHALL NOT BE REMOVED FROM THESE DOCUMENTS

Client: Leon County Schools
3420 W. Tharpe St. Suite 100
Tallahassee, FL 32303

Job Title: Griffin Middle School - Phase 2
800 Alabama St. Tallahassee, FL 32304

Consultant:

Project #: 23483
Phase: 100% CDs

Seal:

ALW
Architects Lewis + Whitlock
206 West Virginia St.
Tallahassee, Florida 32301
850.942.1718
www.think3d.net

Description:
Finish Schedules

Sheet No.:
A8.0

BIMcloud: architectslw - BIMcloud Software as a Service/23483 - BIM Griffin Middle School Phase 2

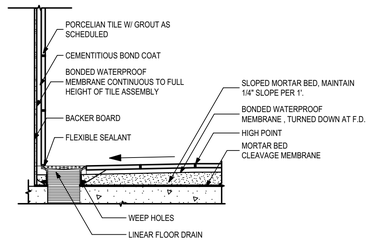

(SYSTEM TO BE COMPLIANT W/ TCNA B421C-24)

7 Shower Floor Detail - Student Showers
1 1/2"= 1'-0"

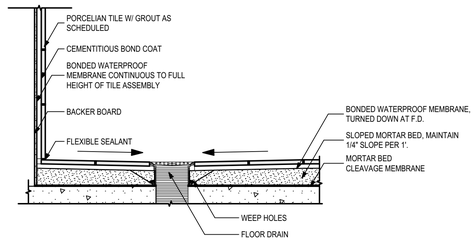

SYSTEM TO BE COMPLIANT W/ TCNA B421C-24

6 Shower Floor Detail - Coach's Offices
1 1/2"= 1'-0"

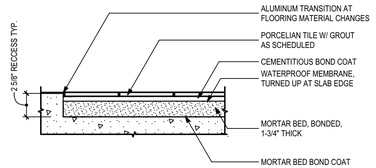

ONLY INSTALLED IN SHOWER ROOMS.

(SYSTEM TO BE COMPLIANT W/ TCNA F112-24)

5 Tile Flooring Detail - Bonded
1 1/2"= 1'-0"

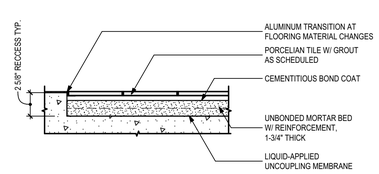

ALL AREAS EXCEPT FOR SHOWER ROOMS TO RECEIVE THIS INSTALL METHOD.

(SYSTEM TO BE COMPLIANT W/ TCNA F111-24)

4 Tile Flooring Detail - Unbonded
1 1/2"= 1'-0"

Interior Finish Legend

	CPT-1	CARPET TILE
	CPT-2	WALK-OFF CARPET TILE
	CT-1	CERAMIC PORCELAIN TILE - FIELD
	CT-2	CERAMIC PORCELAIN FLOOR TILE, POLYGON MOSAIC
	LVT	LUXURY VINYL TILE - FIELD
	WD-1	WOOD GYM FLOOR
	WD-2	WOOD DANCE FLOOR
	EP	EPOXY BROADCAST SYSTEM
	PT-X EPT-X	LOCATION OF ACCENT PAINT, WALL-TO-WALL AND FLOOR-TO-CEILING. SEE FINISH SCHEDULE FOR REMAINING WALLS

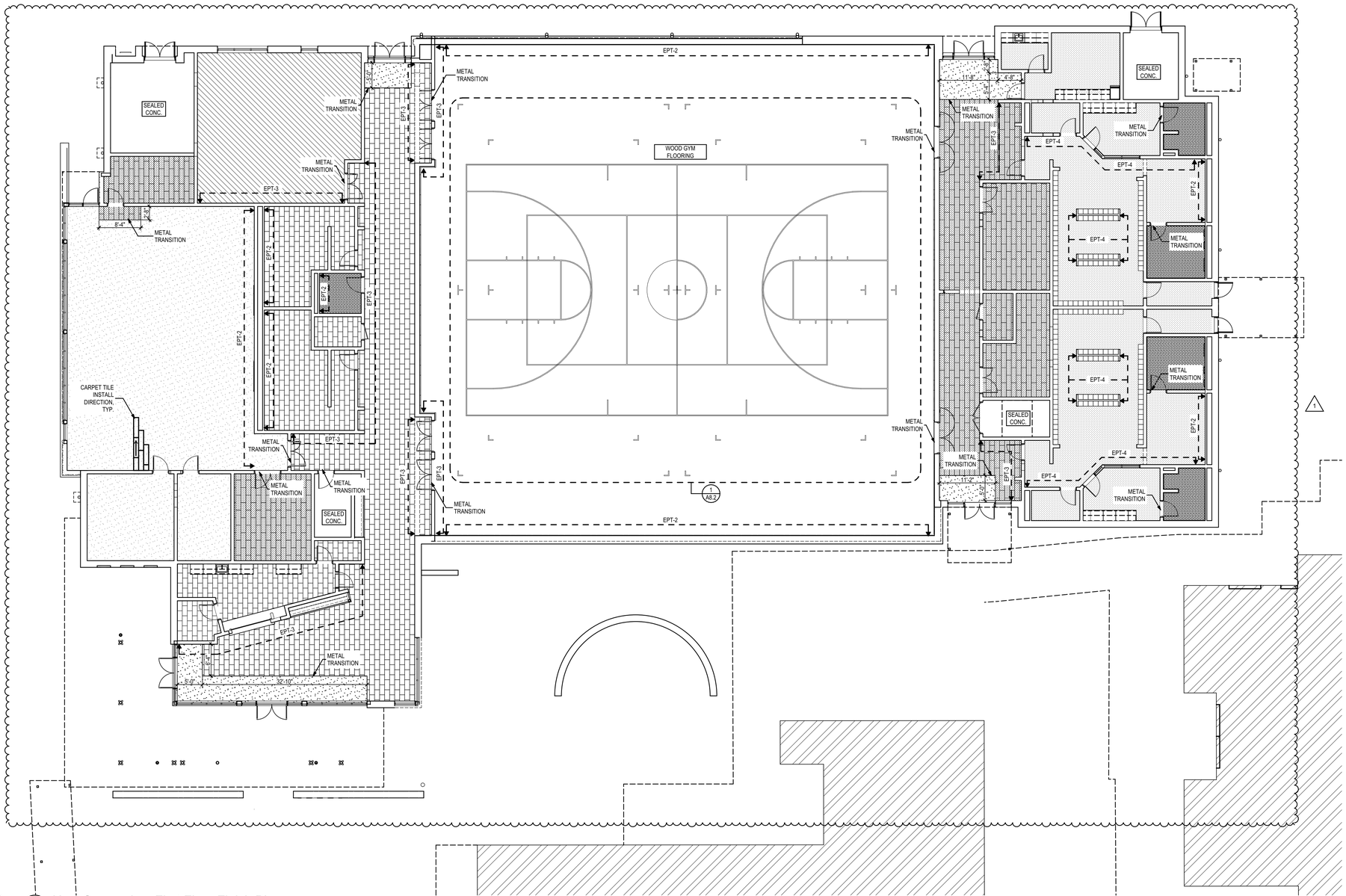

3 New Gymnasium First Floor Finish Plan
3/32" = 1'-0"

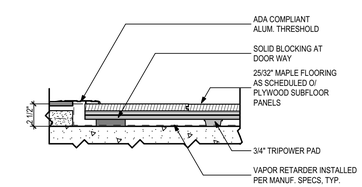

2 Dance Floor Section Detail at Tile Transition
1 1/2"= 1'-0"

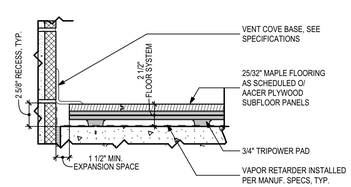

1 Dance Floor Section Detail at Wall Base
1 1/2"= 1'-0"

ID:	DATE:	REVISION:	DRAWN:	REVIEWED:	DATE:
1	10/18/2024	Addendum #1	MS	RL	06/03/2025

PHASE:	DRAWN:	REVIEWED:	DATE:
CONCEPT SCHEM. DESIGN	BG / RS	C. WHITLOCK	10/18/2024
DESIGN DEVELOPMENT	BG/KS/RS/MS	C. WHITLOCK	12/20/2024
EARLY DEMOLITION PACKAGE	BG/KS/MS	R. LEWIS	03/21/2025
80% CONSTRUCTION DOCS.	BG/RS/MS	R. LEWIS	05/09/2025
PERMIT DOCS.			
100% CONSTRUCTION DOCS.	BG/RS/MS	R. LEWIS	

THESE DRAWINGS AND DESIGNS ARE INSTRUMENTS OF SERVICE. THE DRAWINGS AND ASSOCIATED COPIES THEREOF, INCLUDING ELECTRONIC MEDIA AND CADD FILES, ARE THE PROPERTY OF ARCHITECTS LEWIS + WHITLOCK P.A.; THEIR USE, REPRESENTATION OR REPRODUCTION FOR ANY PURPOSE EXCEPT BY WRITTEN AGREEMENT WITH THE ARCHITECT IS PROHIBITED. THIS COPYRIGHT NOTIFICATION SHALL BE TRUE AS IF DIRECTLY PLACED ON EACH DRAWING EXHIBIT OR RENDERING ON THIS DOCUMENT AND SHALL NOT BE REMOVED FROM THESE DOCUMENTS

Client: Leon County Schools
3420 W. Tharpe St. Suite 100
Tallahassee, FL 32303

Job Title: Griffin Middle School - Phase 2
800 Alabama St. Tallahassee, FL 32304

Consultant:

Project #: 23483
Phase: 100% CDs

Seal:

ALW
Architects Lewis + Whitlock
206 West Virginia St.
Tallahassee, Florida 32301
850.942.1718
www.think3d.net

Description:
New Gymnasium First Floor Finish Plan

Sheet No.:
A8.1

BIMcloud: architectslw - BIMcloud Software as a Service/23483 - BIM Griffin Middle School Phase 2

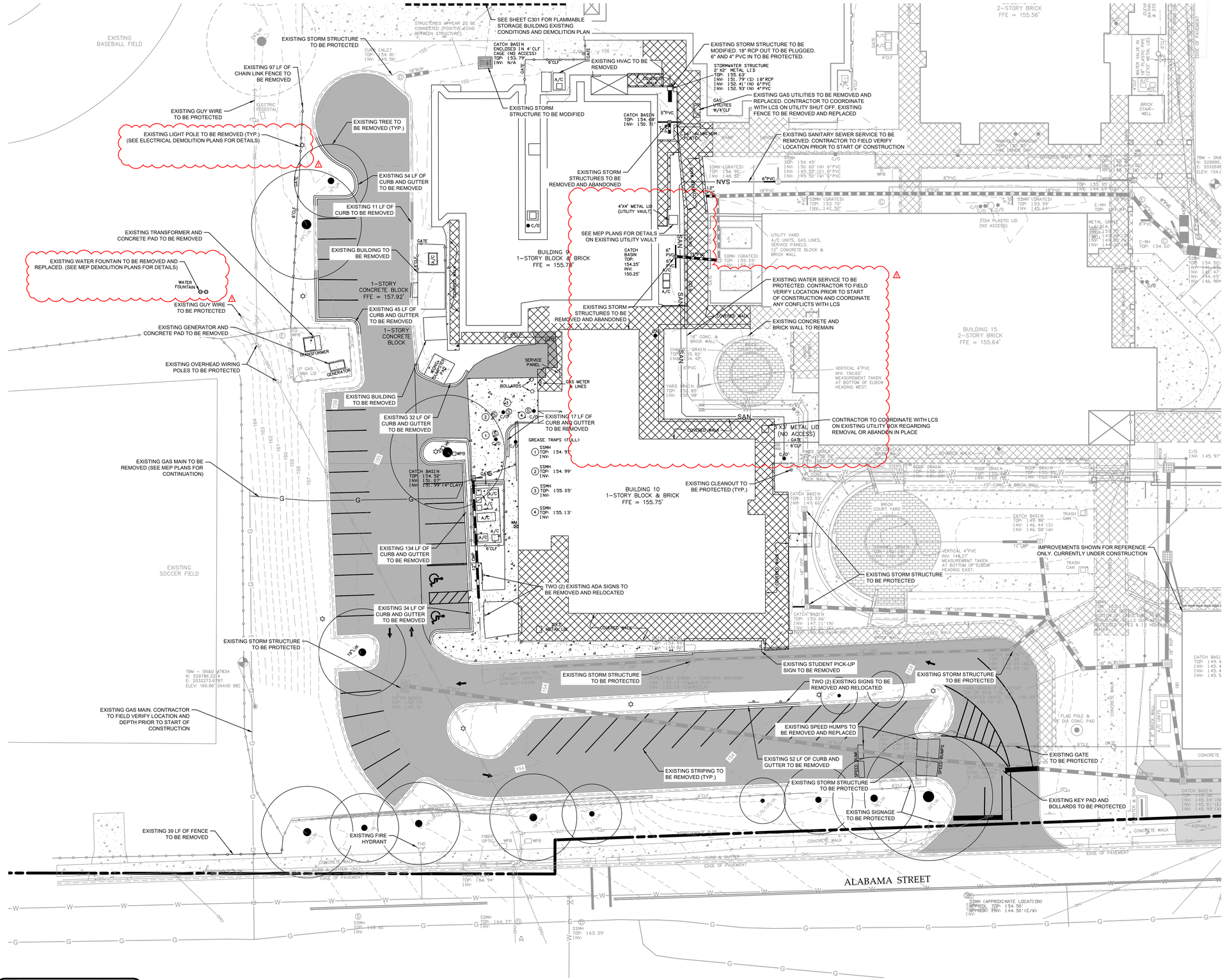

DEMOLITION NOTES:

1. THE INTENT OF THE DEMOLITION PLAN IS TO DEPICT EXISTING FEATURES THAT ENCUMBER THE PROPOSED CONSTRUCTION AREA AND ARE SCHEDULED FOR REMOVAL. SOME INCIDENTAL ITEMS MAY HAVE BEEN INADVERTENTLY OMITTED FROM THE PLAN. THE CONTRACTOR IS ENCOURAGED TO THOROUGHLY INSPECT THE SITE AS WELL AS REVIEW THE PLANS AND SPECIFICATIONS PRIOR TO SUBMITTING PRICING. THE CONTRACTOR WILL NOT RECEIVE ADDITIONAL COMPENSATION FOR INCIDENTAL ITEMS NOT SHOWN ON THIS DEMOLITION PLAN.
2. THIS DEMOLITION PLAN IS BASED ON AVAILABLE UTILITY INFORMATION AND MAY OR MAY NOT BE ALL INCLUSIVE FOR THIS SITE. ANY UTILITIES ENCOUNTERED DURING DEMOLITION THAT ARE NOT DEPICTED/ ADDRESSED ON THIS DEMOLITION PLAN SHALL BE BROUGHT TO THE ATTENTION OF THE ENGINEER IMMEDIATELY.
3. THE CONTRACTOR IS REQUIRED TO OBTAIN ALL DEMOLITION PERMITS WHICH INVOLVES COMPLETION OF A HAZARDOUS WASTE INSPECTION, AND MITIGATION OF ANY ISSUES PRIOR TO SITE WORK.
4. ALL FEATURES IDENTIFIED ON THIS PLAN WHICH ARE INDICATED TO BE DEMOLISHED ARE TO BE REMOVED FROM THE SITE. AFTER DEMOLITION IS COMPLETE THE SITE SHALL BE DELIVERED IN A CONDITION SUITABLE FOR DEVELOPMENT.
5. THE CONTRACTOR SHALL LIMIT ALL DEMOLITION ACTIVITIES TO THOSE AREAS DELINEATED ON THIS DEMOLITION PLAN UNLESS DIRECTED OTHERWISE BY THE ENGINEER, OR AS REQUIRED FOR CONSTRUCTION OF IMPROVEMENTS.
6. THE CONTRACTOR IS RESPONSIBLE FOR CONTROLLING AIRBORNE DUST AND POLLUTANTS BY USING WATER SPRINKLING OR OTHER SUITABLE MEANS OF CONTROL.
7. THE CONTRACTOR SHALL USE CARE IN HANDLING DEBRIS FROM THE SITE TO ENSURE THE SAFETY OF THE PUBLIC. THE HAUL ROUTE IS TO BE CLOSELY MONITORED FOR DEBRIS OR MATERIALS TRACKED ONTO ADJOINING ROADWAYS, SIDEWALKS ETC. ROADWAYS AND WALKWAYS TO BE CLEARED DAILY OR AS NECESSARY TO MAINTAIN PUBLIC SAFETY.
8. ALL ASPHALT TO BE REMOVED SHALL BE SAW CUT ADJACENT TO REMAINING IMPROVEMENTS.
9. EXISTING SITE FEATURES LOCATED WITHIN THE AREA OF DEMOLITION IDENTIFIED TO REMAIN SHALL BE PROTECTED DURING THE COURSE OF CONSTRUCTION. FEATURES AFFECTED BY GRADING SHALL BE ADJUSTED TO MEET DESIGN GRADES.
10. THE CONTRACTOR SHALL COORDINATE WITH ALL UTILITY OWNERS PRIOR TO REMOVAL AND/OR RELOCATION OF EXISTING UTILITIES. ALL EXISTING UTILITY CONNECTIONS ARE TO BE DISCONNECTED AND REMOVED TO SERVICE POINT OR METER UNLESS NOTED TO REMAIN. THE CONTRACTOR IS RESPONSIBLE FOR MAINTAINING AND PROTECTING UTILITIES WITHIN THE LIMITS OF CONSTRUCTION AND SHALL BE RESPONSIBLE FOR ALL DAMAGES DURING CONSTRUCTION, AND SHALL REPAIR SAID DAMAGES AT HIS/HER EXPENSE.
11. EXISTING SURVEY MONUMENTS SHALL NOT BE DISTURBED, ANY DISTURBED OR REMOVED MONUMENT SHALL BE REPLACED BY A FLORIDA REGISTERED SURVEYOR AT THE EXPENSE OF THE CONTRACTOR.

NOTES:

1. CONTRACTOR TO COORDINATE TEMPORARY SIGNAGE, FENCING, AND CLOSURES WITH LCS.

DEMOLITION LEGEND

- DEMOLISH CONCRETE
- ASPHALT TO BE MILLED AND RESURFACED
- SALVAGE ALUMINUM CANOPIES AND DEMOLISH CONCRETE SIDEWALK
- DEMOLISH LIGHT/POWER POLE
- DEMOLISH WATER MAIN
- DEMOLISH CLEANOUT/SEWER
- DEMOLISH GAS MAIN
- DEMOLISH FENCE
- DEMOLISH STORM PIPE
- DEMOLISH STORM STRUCTURE
- DEMOLISH TREE

CALL 2 WORKING DAYS BEFORE YOU DIG

IT'S THE LAW! DIAL 811

811 Know what's below. Call before you dig.

SUNSHINE STATE ONE CALL OF FLORIDA, INC.

Cameron R. Snipes, Professional Engineer, State of Florida, License No. 75465
This item has been digitally signed and sealed by Cameron R. Snipes , PE, on 06/04/2025.
Printed copies of this document are not considered signed and sealed and the signature must be verified on any electronic copies.

PHASE:	DRAWN:	REVIEWED:	DATE:	ID:	REVISION:	DRAWN:	REVIEWED:	DATE:
CONCEPT SCHEMATIC DESIGN	AT	CRS	10/18/2024	1	ADDENDUM #1	AT	CRS	06/03/2025
DESIGN DEVELOPMENT	AT	CRS	12/20/2024					
EARLY DEMOLITION PACKAGE	AT	CRS	03/21/2025					
80% CONSTRUCTION DOCS.	AT	CRS	05/09/2025					
PERMIT DOCS.								
100% CONSTRUCTION DOCS.	AT	CRS						

THESE DRAWINGS AND RENDERINGS ARE INSTRUMENTS OF SERVICE. THE DRAWINGS AND ASSOCIATED COPIES THEREOF, INCLUDING ELECTRONIC MEDIA AND CADD FILES, ARE THE PROPERTY OF ARCHITECTS: LEWIS + WHITLOCK, PLA. THEIR USE, REPRESENTATION OR REPRODUCTION FOR ANY PURPOSE OTHER THAN FOR THE PROJECT SPECIFICALLY ADDRESSED BY THESE DOCUMENTS IS PROHIBITED WITHOUT THEIR WRITTEN CONSENT. ANY SUCH USE, IF PERMITTED, SHALL BE PLACED ON EACH DRAWING EXHIBIT OR RENDERING ON THIS DOCUMENT AND SHALL NOT BE REMOVED FROM THESE DOCUMENTS

Client: Leon County Schools
3420 W. Tharpe St., Suite 100
Tallahassee, FL 32303

Job Title: Griffin Middle School - Phase 2
800 Alabama St. Tallahassee, FL 32304

Consultant: Kimley»Horn
© 2025 KIMLEY-HORN AND ASSOCIATES, INC.
2610 CENTENNIAL BLVD, SUITE 200
TALLAHASSEE, FL 32308 PH: 850-553-3000
PM: KACEY HORNE

Seal:

Project #: 23483
Phase: 100% Construction Documents

ALW
Architects Lewis + Whitlock
206 West Virginia St.
Tallahassee, Florida 32301
850.942.1718
www.think3d.net

Description: EXISTING CONDITIONS AND DEMOLITION PLAN

Sheet No.: C200

Plotted By:Thornberg, Alex Sheet Set:GRIFFIN MIDDLE SCHOOL PHASE 2 Layout:C200 EXISTING CONDITIONS AND DEMOLITION PLAN June 04, 2025 07:56:02am K:\tal_civil\424260506 - griffin ms gym ph 2\Design\CADD\plansheets\C200 EXISTING CONDITIONS AND DEMOLITION PLAN.dwg
This document, together with the concepts and designs presented herein, as an instrument of service, is intended only for the specific purpose and client for which it was prepared. Reuse of and improper reliance on this document without written authorization and adaptation by Kimley-Horn and Associates, Inc. shall be without liability to Kimley-Horn and Associates, Inc.

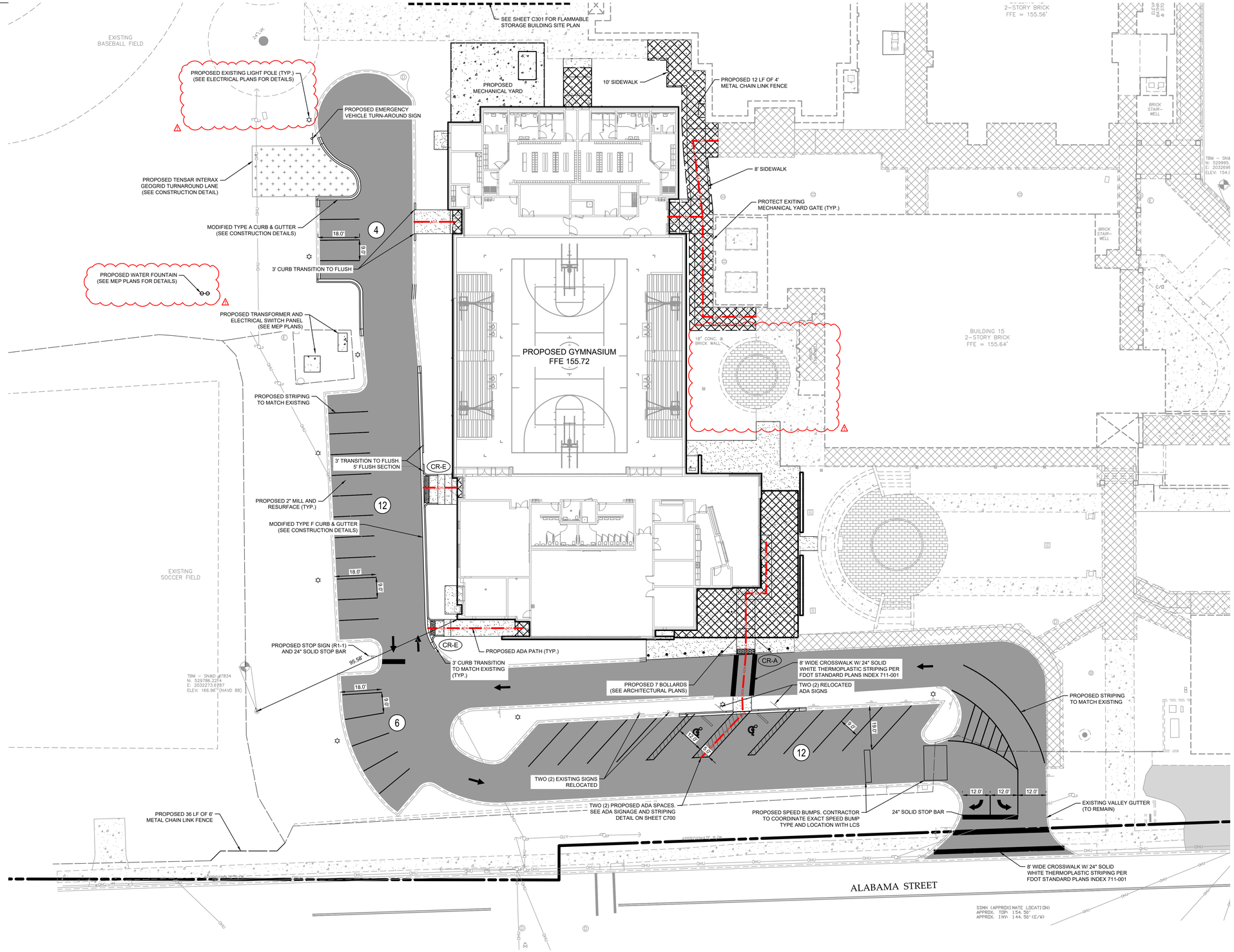

CALL 2 WORKING DAYS BEFORE YOU DIG

IT'S THE LAW! DIAL 811

811 Know what's below. Call before you dig.

SUNSHINE STATE ONE CALL OF FLORIDA, INC.

SITE PLAN NOTES:

1. ALL STRIPING SHALL BE RESTORED TO PRE-CONSTRUCTION CONDITION AND BE THERMOPLASTIC.

(CR-X) CURB RAMP - FDOT TYPE X PER STANDARD PLANS 522-002 (DETECTABLE WARNINGS SHALL BE INSTALLED PER FDOT SPECIFICATIONS)

LEGEND

- PROPOSED 2" MILL AND RESURFACE (SEE DETAIL CONSTRUCTION DETAILS SHEET C700)
- PROPOSED HEAVY DUTY CONCRETE
- PROPOSED CONCRETE SIDEWALK
- PROPOSED COVERED WALKWAY (SEE ARCH. PLANS)

Parking Spaces:		
Number of Regular Spaces	32	spaces
Relocated ADA spaces:	2	spaces
Total Number of Parking Spaces	34	spaces

PHASE:	DRAWN:	REVIEWED:	DATE:	ID:	REVISION:	DRAWN:	REVIEWED:	DATE:
CONCEPT SCHEMATIC DESIGN	AT	CRS	10/18/2024	1	ADDENDUM #1	AT	CRS	06/03/2025
DESIGN DEVELOPMENT	AT	CRS	12/20/2024					
EARLY DEMOLITION PACKAGE	AT	CRS	03/21/2025					
80% CONSTRUCTION DOCS.								
PERMIT DOCS.								
100% CONSTRUCTION DOCS.	AT	CRS	05/09/2025					

THESE DRAWINGS AND RENDERINGS ARE INSTRUMENTS OF SERVICE. THE DRAWINGS AND ASSOCIATED COPIES THEREOF, INCLUDING ELECTRONIC MEDIA AND CADD FILES, ARE THE PROPERTY OF ARCHITECTS: LEWIS + WHITLOCK, P.A. THEIR USE, REPRESENTATION OR REPRODUCTION FOR ANY PURPOSE OTHER THAN THE PROJECT SPECIFIED ABOVE IS PROHIBITED WITHOUT THE WRITTEN CONSENT OF ARCHITECTS. ELECTRONIC FILES IF DIRECTLY PLACED ON EACH DRAWING EXHIBIT OR RENDERING ON THIS DOCUMENT AND SHALL NOT BE REMOVED FROM THESE DOCUMENTS

Client: Leon County Schools
3420 W. Tharpe St., Suite 100
Tallahassee, FL 32303

Job Title: Griffin Middle School - Phase 2
800 Alabama St. Tallahassee, FL 32304

Consultant: Kimley»Horn
© 2025 KIMLEY-HORN AND ASSOCIATES, INC.
2019 CENTENNIAL BLVD, SUITE 200
TALLAHASSEE, FL 32308 PH: 850-383-3000
WWW.KIMLEY-HORN.COM

Seal:

Project #: 23483

Phase: 100% Construction Documents

ALW

Architects Lewis + Whitlock
206 West Virginia St.
Tallahassee, Florida 32301
850.942.1718
www.think3d.net

Description: SITE PLAN

Sheet No.: C300

Plotted By: Thornberg, Alex Sheet Set:GRIFFIN MIDDLE SCHOOL PHASE 2 Layout:C300 SITE PLAN June 04, 2025 07:56:39am K:\tal_civil\142260\06 – griffin ms gym ph 2\Design\CADD\plansheets\C300 SITE PLAN.dwg
This document, together with the concepts and designs presented herein, as an instrument of service, is intended only for the specific purpose and client for which it was prepared. Reuse of and improper reliance on this document without written authorization and adaptation by Kimley-Horn and Associates, Inc. shall be without liability to Kimley-Horn and Associates, Inc.

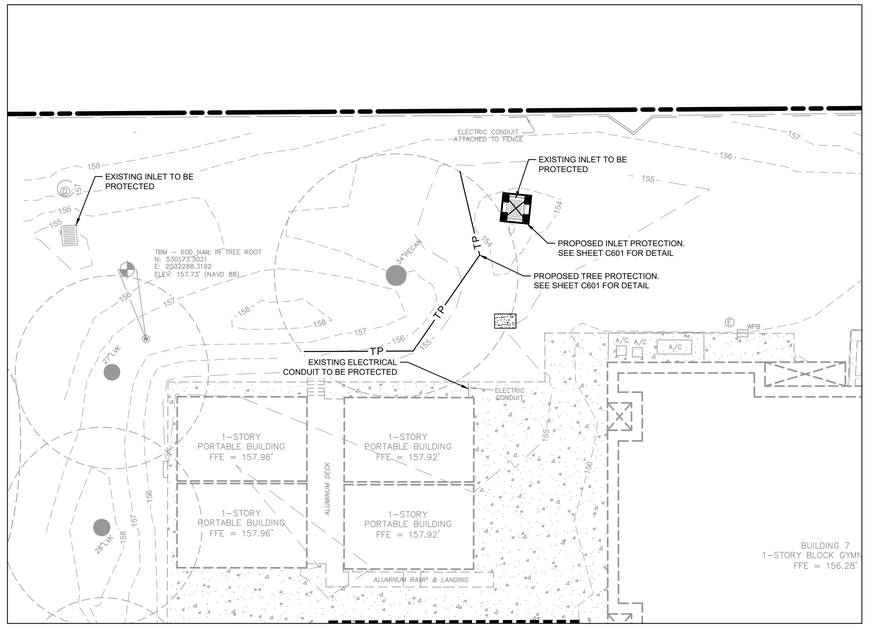

EXISTING CONDITIONS AND DEMOLITION PLAN

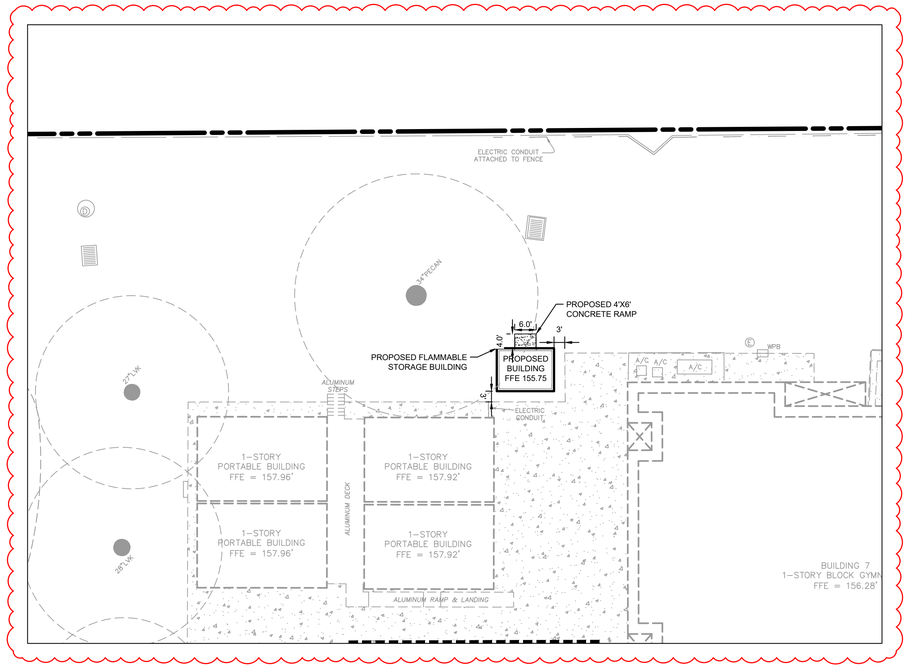

SITE PLAN

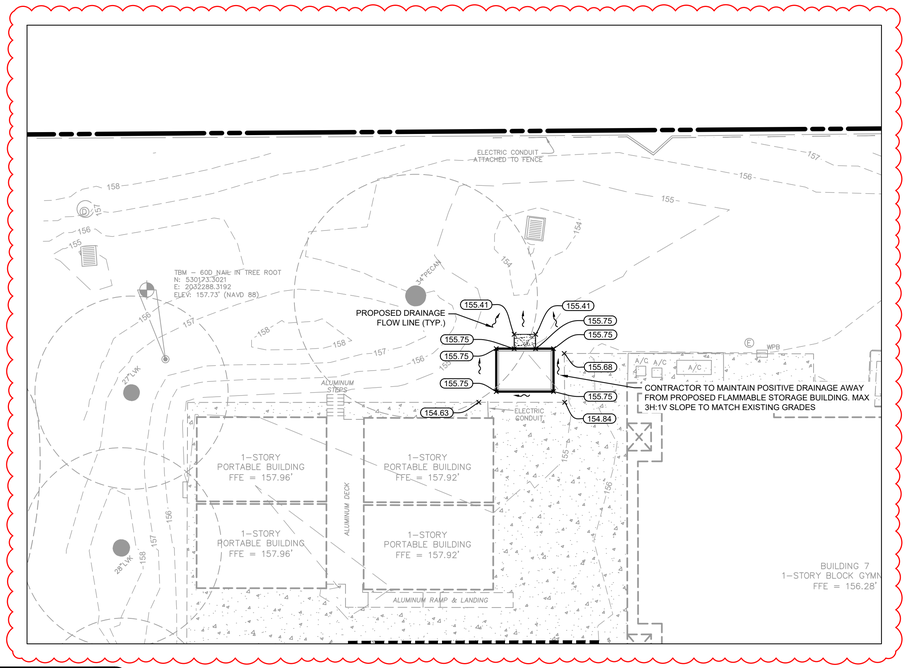

GRADING AND DRAINAGE PLAN

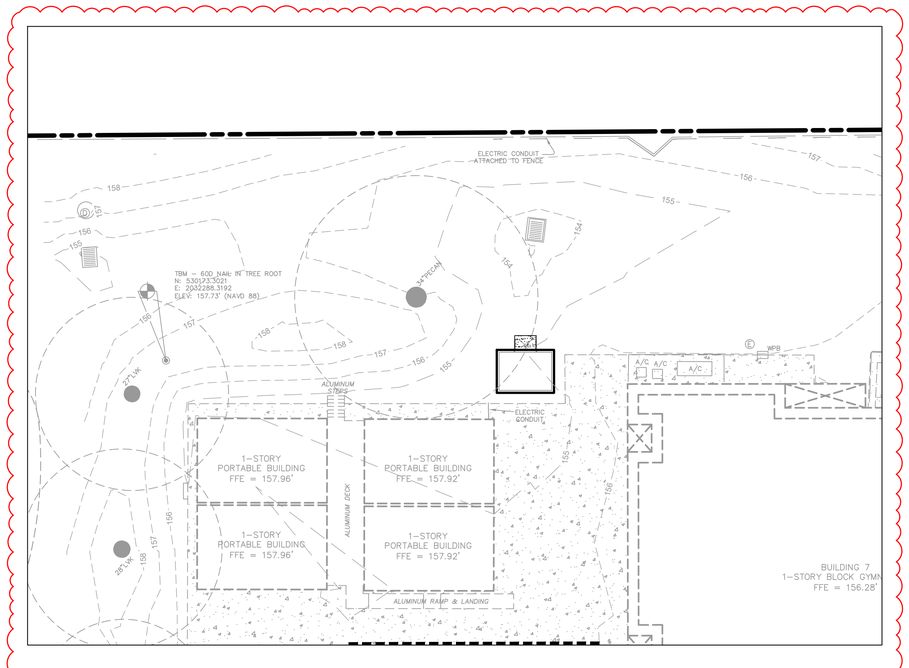

UTILITY PLAN

NOTE

SEE MEP PLANS FOR ELECTRICAL UTILITY DETAILS TO FLAMMABLE STORAGE BUILDING

NORTH

GRAPHIC SCALE IN FEET

0 10 20 40

CALL 2 WORKING DAYS BEFORE YOU DIG

IT'S THE LAW! DIAL 811

811 Know what's below. Call before you dig.

SUNSHINE STATE ONE CALL OF FLORIDA, INC.

PHASE:	DRAWN:	REVIEWED:	DATE:	ID:	REVISION:	DRAWN:	REVIEWED:	DATE:
CONCEPT SCHEMATIC DESIGN	AT	CRS	10/18/2024	1	ADDENDUM #1	AT	CRS	06/03/2025
DESIGN DEVELOPMENT	AT	CRS	12/20/2024					
EARLY DEMOLITION PACKAGE								
80% CONSTRUCTION DOCS.	AT	CRS	03/21/2025					
PERMIT DOCS.								
100% CONSTRUCTION DOCS.	AT	CRS	05/09/2025					

THESE DRAWINGS AND RENDERINGS ARE INSTRUMENTS OF SERVICE. THE DRAWINGS AND ASSOCIATED COPIES THEREOF, INCLUDING ELECTRONIC MEDIA AND CADD FILES, ARE THE PROPERTY OF ARCHITECTS LEWIS + WHITLOCK, P.A. THEIR USE, REPRESENTATION OR REPRODUCTION FOR ANY PURPOSE OTHER THAN THE PROJECT DESCRIBED HEREIN IS PROHIBITED WITHOUT THE WRITTEN CONSENT OF ARCHITECTS LEWIS + WHITLOCK, P.A. THESE DRAWINGS MAY NOT BE PLACED ON EACH DRAWING EXHIBIT OR RENDERING ON THIS DOCUMENT AND SHALL NOT BE REMOVED FROM THESE DOCUMENTS

Client: Leon County Schools
3420 W. Tharpe St., Suite 100
Tallahassee, FL 32303

Consultant: Kimley»Horn
© 2025 KIMLEY-HORN AND ASSOCIATES, INC.
2619 CENTENNIAL BLVD., SUITE 200
TALLAHASSEE, FLORIDA 32308 PHONE: 850-553-3500
WWW.KIMLEY-HORN.COM

Job Title: Griffin Middle School - Phase 2
800 Alabama St. Tallahassee, FL 32304

Seal:

Project #: 23483

Phase: 100% Construction Documents

ALW

Architects Lewis + Whitlock
206 West Virginia St.
Tallahassee, Florida 32301
850.942.1718
www.think3d.net

Description: FLAMMABLE STORAGE BUILDING PLAN

Sheet No.: C301

Plotted By: Thornberg, Alex Sheet Set: GRIFFIN MIDDLE SCHOOL PHASE 2 Layout: C301 FLAMMABLE STORAGE BUILDING PLAN June 04, 2025 07:57:53am K:\tal_civil\142426006 - griffin ms gym ph 2\design\CADD\plansheets\C301 FLAMMABLE STORAGE BUILDING PLAN.dwg
This document, together with the concepts and designs presented herein, as an instrument of service, is intended only for the specific purpose and client for which it was prepared. Reuse of and improper reliance on this document without written authorization and adaptation by Kimley-Horn and Associates, Inc. shall be without liability to Kimley-Horn and Associates, Inc.

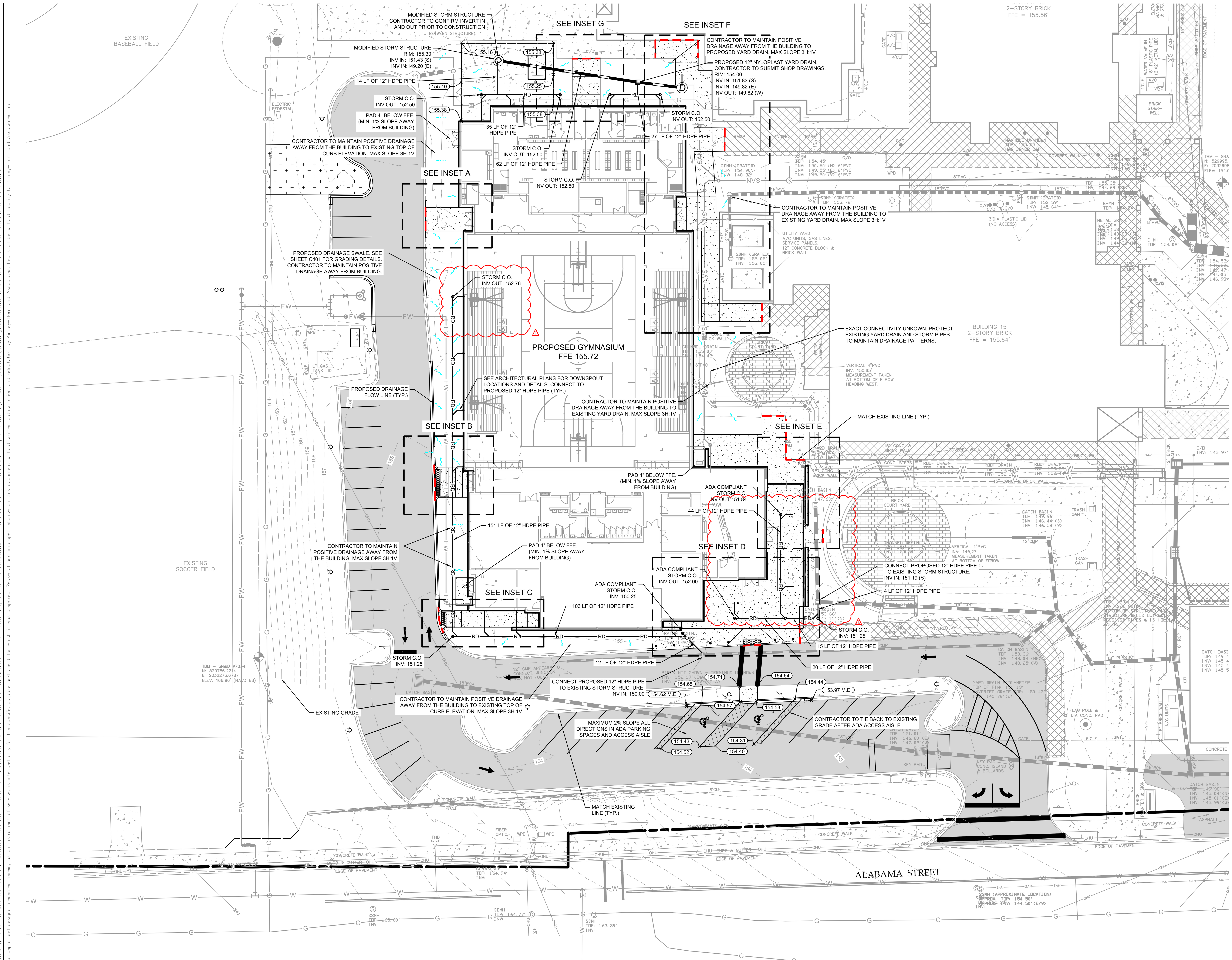

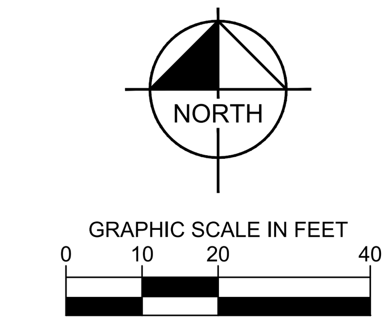

PAVING AND GRADING NOTES

1. TOPOGRAPHIC INFORMATION IS TAKEN FROM A TOPOGRAPHIC SURVEY BY LAND SURVEYORS. IF THE CONTRACTOR DOES NOT ACCEPT EXISTING TOPOGRAPHY AS SHOWN ON THE PLANS, WITHOUT EXCEPTION, THEN THE CONTRACTOR SHALL SUPPLY, AT THEIR EXPENSE, A TOPOGRAPHIC SURVEY BY A REGISTERED LAND SURVEYOR TO THE OWNER FOR REVIEW.
2. THE CONTRACTOR IS SPECIFICALLY CAUTIONED THAT THE LOCATION AND/OR ELEVATION OF EXISTING UTILITIES AS SHOWN ON THESE PLANS IS BASED ON RECORDS OF THE VARIOUS UTILITY COMPANIES, AND WHERE POSSIBLE, MEASUREMENTS TAKEN IN THE FIELD. THE INFORMATION IS NOT TO BE RELIED ON AS BEING EXACT OR COMPLETE. THE CONTRACTOR MUST CALL THE APPROPRIATE UTILITY COMPANIES AT LEAST 72 HOURS BEFORE ANY EXCAVATION TO REQUEST EXACT FIELD LOCATION OF UTILITIES. IT SHALL BE THE RESPONSIBILITY OF THE CONTRACTOR TO RELOCATE ALL EXISTING UTILITIES WHICH CONFLICT WITH THE PROPOSED IMPROVEMENTS SHOWN ON THE PLANS.
3. CONSTRUCTION SHALL COMPLY WITH ALL APPLICABLE GOVERNING CODES AND BE CONSTRUCTED TO SAME.
4. FIELD DENSITY TESTS SHALL BE TAKEN AT INTERVALS IN ACCORDANCE WITH THE SPECIFICATIONS AND LOCAL JURISDICTIONAL AGENCY. IN THE EVENT THAT THE CONTRACT DOCUMENTS AND THE JURISDICTIONAL AGENCY REQUIREMENTS ARE NOT IN AGREEMENT, THE MOST STRINGENT SHALL GOVERN.
5. CONTRACTOR SHALL ADJUST AND/OR CUT EXISTING PAVEMENT AS NECESSARY TO ASSURE A SMOOTH FIT AND CONTINUOUS GRADE.
6. CONTRACTOR SHALL ASSURE POSITIVE DRAINAGE AWAY FROM BUILDINGS FOR ALL NATURAL AND PAVED AREAS.
7. ALL AREAS INDICATED AS PAVEMENT SHALL BE CONSTRUCTED IN ACCORDANCE WITH THE TYPICAL PAVEMENT SECTIONS AS INDICATED ON THE DRAWINGS.
8. WHERE EXISTING PAVEMENT IS INDICATED TO BE REMOVED AND REPLACED, THE CONTRACTOR SHALL SAW-CUT THE FULL DEPTH OF PAVEMENT FOR A SMOOTH AND STRAIGHT JOINT AND REPLACE THE PAVEMENT WITH THE SAME TYPE AND DEPTH OF MATERIAL AS EXISTING OR AS INDICATED.
9. WHERE NEW PAVEMENT MEETS THE EXISTING PAVEMENT, THE CONTRACTOR SHALL SAW-CUT THE FULL DEPTH OF EXISTING PAVEMENT FOR A SMOOTH AND STRAIGHT JOINT AND MATCH THE EXISTING PAVEMENT ELEVATION WITH THE PROPOSED PAVEMENT UNLESS OTHERWISE INDICATED.
10. CONTRACTOR SHALL EXCAVATE EXISTING PAVEMENT/SIDEWALK AREAS THAT ARE TO BE LANDSCAPED A MINIMUM OF 30" OR AS DEEP AS NECESSARY TO ENSURE ALL STONE BASE / PAVEMENT MATERIAL IS REMOVED (WHICHEVER IS GREATER) AND BACKFILL WITH CLEAN / DRAINING SAND TO WITHIN 4" OF TOP OF CURB TO ENSURE PROPER SOIL FOR PLANT MATERIALS. SEE LANDSCAPE PLANS FOR FURTHER DETAILS.
11. ALL UN-SURFACED AREAS DISTURBED BY GRADING OPERATION SHALL RECEIVE 4 INCHES OF TOPSOIL. CONTRACTOR SHALL APPLY STABILIZATION FABRIC TO ALL SLOPES 3H:1V OR STEEPER. CONTRACTOR SHALL STABILIZE DISTURBED AREAS IN ACCORDANCE WITH GOVERNING SPECIFICATIONS UNTIL A HEALTHY STAND OF VEGETATION IS OBTAINED.
12. THE CONTRACTOR SHALL GRADE THE SITE TO THE ELEVATIONS INDICATED AND SHALL RE-GRADE WASHOUTS WHERE THEY OCCUR AFTER EVERY RAINFALL UNTIL A GRASS STAND IS WELL ESTABLISHED OR ADEQUATE STABILIZATION OCCURS.
13. CONTRACTOR SHALL REPAIR ANY DAMAGE TO THE R.O.W. CAUSED DURING CONSTRUCTION, SUCH AS REPLACE ANY CURB AND GUTTER AND OTHER EXISTING INFRASTRUCTURE THAT IS DAMAGED DUE TO THE DEVELOPMENT CONSTRUCTION. PRECONSTRUCTION CONDITIONS SHALL BE PHOTOGRAPHICALLY DOCUMENTED.
14. FINISHED GRADE ELEVATIONS ARE FINISHED PAVEMENT ELEVATIONS UNLESS OTHERWISE SHOWN.
15. THIS DOCUMENT DOES NOT AUTHORIZE THE CONSTRUCTION OF RETAINING WALLS. ALL RETAINING WALLS HIGHER THAN TWO FEET REQUIRE A SEPARATE BUILDING PERMIT.

DRAINAGE NOTES

1. CONTRACTOR TO CONSTRUCT DRAINAGE STRUCTURES WITH USF GRATES, RIMS AND COVERS AS CALLED OUT OR APPROVED EQUAL. SHOP DRAWINGS ARE TO BE PROVIDED TO ENGINEER FOR APPROVAL PRIOR TO ANY CONSTRUCTION.
2. CONTRACTOR TO REFER TO FDOT DESIGN STANDARD 425 SERIES FOR MANHOLE, INLET AND GRATE SPECIFICATIONS.
3. ALL DRAINAGE STRUCTURES SHALL BE CONSTRUCTED WITH (4) SIDED BEARING HEAVY DUTY H-20 RATED TRAFFIC RIMS AND GRATES.
4. CONTRACTOR TO VERIFY ALL EXISTING UTILITY RINGS AND COVERS ON SITE ARE HEAVY DUTY TRAFFIC RATED. CONTRACTOR TO REPLACE DEFICIENT RINGS AND COVERS WITH HEAVY DUTY TRAFFIC RATED RINGS AND COVERS. CONTRACTOR TO ADJUST RIM ELEVATIONS OF ANY UTILITIES THAT CHANGE IN ELEVATION DURING CONSTRUCTION.
5. ALL CLEAN-OUT COVERS SHOULD BE RATED FOR HEAVY DUTY TRAFFIC.
6. SIDEWALKS AND CROSSWALKS SHALL NOT EXCEED 2% CROSS SLOPE NOR 5% LONGITUDINALLY. GRADES IN ACCESSIBLE PARKING SPACES SHALL NOT EXCEED 2% IN ANY DIRECTION. IN CASES OF SIDEWALK LANDINGS AT BUILDING ENTRANCES, GRADES SHALL NOT EXCEED 2% IN ANY DIRECTION. ACCESSIBLE CURB RAMPS SHALL NOT EXCEED 6' IN LENGTH AND 1:12 SLOPE. LANDINGS AT CHANGES IN DIRECTION SHALL BE MINIMUM 60"x60" AND SHALL NOT EXCEED 2% SLOPE IN ANY DIRECTION.
7. ROOF DRAIN CONNECTIONS TO DRAINAGE PIPE SHALL BE AS FOLLOWS:
   A. FOR ADS N-12 CORRUGATED POLYETHYLENE DRAINAGE PIPE USE ADS DUAL WALL FABRICATED REDUCING SADDLE TEE 4"-24" DIAMETER.
   B. FOR RCP DRAINAGE PIPE MAKE CONNECTION PER FDOT STANDARD PLANS INDEX 430-001, CONCRETE COLLAR FOR JOINING MAINLINE PIPE AND STUB PIPE DETAIL
   C. NOTIFY CONSULTANT FOR CONNECTION METHOD TO STEEL PIPE.
8. ALL DRAINAGE PIPE JOINTS SHALL BE FILTER FABRIC WRAPPED PER FDOT STANDARD PLANS INDEX 430-001. ALL DRAINAGE PIPE JOINTS NEED TO BE FILTER FABRIC WRAPPED REGARDLESS OF MATERIAL.
9. IF ANY EXISTING STRUCTURES TO REMAIN ARE DAMAGED DURING CONSTRUCTION IT SHALL BE THE CONTRACTORS RESPONSIBILITY TO REPAIR AND/OR REPLACE THE EXISTING STRUCTURE AS NECESSARY TO RETURN IT TO EXISTING CONDITIONS OR BETTER.
10. CONTRACTOR IS RESPONSIBLE FOR DEMOLITION OF EXISTING STRUCTURES INCLUDING REMOVAL OF ANY EXISTING UTILITIES SERVING THE STRUCTURE.
11. EXISTING PIPES TO BE CLEANED OUT TO REMOVE ALL SILT AND DEBRIS.
12. PRECAST STRUCTURES MAY BE USED AT CONTRACTORS OPTION.
13. ALL STORM PIPE ENTERING STRUCTURES SHALL BE GROUTED TO ASSURE CONNECTION AT STRUCTURE IS WATERTIGHT.
14. ALL STORM SEWER MANHOLES IN PAVED AREAS SHALL BE FLUSH WITH PAVEMENT, AND SHALL HAVE TRAFFIC BEARING RING & COVERS. MANHOLES IN UNPAVED AREAS SHALL BE 6" ABOVE FINISH GRADE. LIDS SHALL BE LABELED "STORM SEWER".
15. ALL CATCH BASINS WITHIN PROPOSED TRAFFIC AREAS SHALL HAVE BICYCLE PROOF GRATES.
16. THE CITY OF TALLAHASSEE IS NOT RESPONSIBLE FOR THE MAINTENANCE, UPKEEP OR IMPROVEMENT OF ANY STORMWATER MANAGEMENT FACILITY UTILIZED BY THE LAND DESCRIBED HEREIN. TITLE TO THIS PROPERTY CARRIES WITH IT THE REQUIREMENT THAT CURRENT AND ALL SUBSEQUENT LANDOWNERS OR THEIR AUTHORIZED AGENT OBTAIN A STORMWATER MANAGEMENT FACILITY OPERATING PERMIT FROM THE CITY. THE OWNER OF THIS PROPERTY SHALL BE LEGALLY RESPONSIBLE FOR COMPLIANCE WITH ALL STORMWATER MANAGEMENT FACILITY OPERATING PERMIT MAINTENANCE AND OPERATION REQUIREMENTS, AS WELL AS ALL OTHER PERMIT CONDITIONS.

CALL 2 WORKING DAYS BEFORE YOU DIG
IT'S THE LAW! DIAL 811
811 Know what's below. Call before you dig.
SUNSHINE STATE ONE CALL OF FLORIDA, INC.

PHASE:	DRAWN:	REVIEWED:	DATE:	ID:	REVISION:	DRAWN:	REVIEWED:	DATE:
CONCEPT SCHEMATIC DESIGN	AT	CRS	10/18/2024	1	ADDENDUM #1	AT	CRS	06/03/2025
DESIGN DEVELOPMENT	AT	CRS	12/20/2024					
EARLY DEMOLITION PACKAGE								
80% CONSTRUCTION DOCS.	AT	CRS	03/21/2025					
PERMIT DOCS.								
100% CONSTRUCTION DOCS.	AT	CRS	05/09/2025					

THESE DRAWINGS AND RENDERINGS ARE INSTRUMENTS OF SERVICE. THE DRAWINGS AND ASSOCIATED COPIES THEREOF , INCLUDING ELECTRONIC MEDIA AND CADD FILES, ARE THE PROPERTY OF ARCHITECTS: LEWIS + WHITLOCK, PA.A. THEIR USE, REPRESENTATION OR REPRODUCTION FOR ANY PURPOSE EXCEPT BY WRITTEN AGREEMENT WITH THE ARCHITECT IS PROHIBITED. THIS COPYRIGHT NOTIFICATION SHALL BE TRUE AS IF DIRECTLY PLACED ON EACH DRAWING EXHIBIT OR RENDERING ON THIS DOCUMENT AND SHALL NOT BE REMOVED FROM THESE DOCUMENTS

Client:
Leon County Schools
3420 W. Tharpe St., Suite 100
Tallahassee, FL 32303

Job Title:
Griffin Middle School - Phase 2
800 Alabama St. Tallahassee, FL 32304

Consultant:
Kimley»Horn

Seal:

Project #: 23483
Phase: 100% Construction Documents

ALW
Architects Lewis + Whitlock
206 West Virginia St.
Tallahassee, Florida 32301
850.942.1718
www.think3d.net

Description:
GRADING AND DRAINAGE PLAN

Sheet No.:
C400

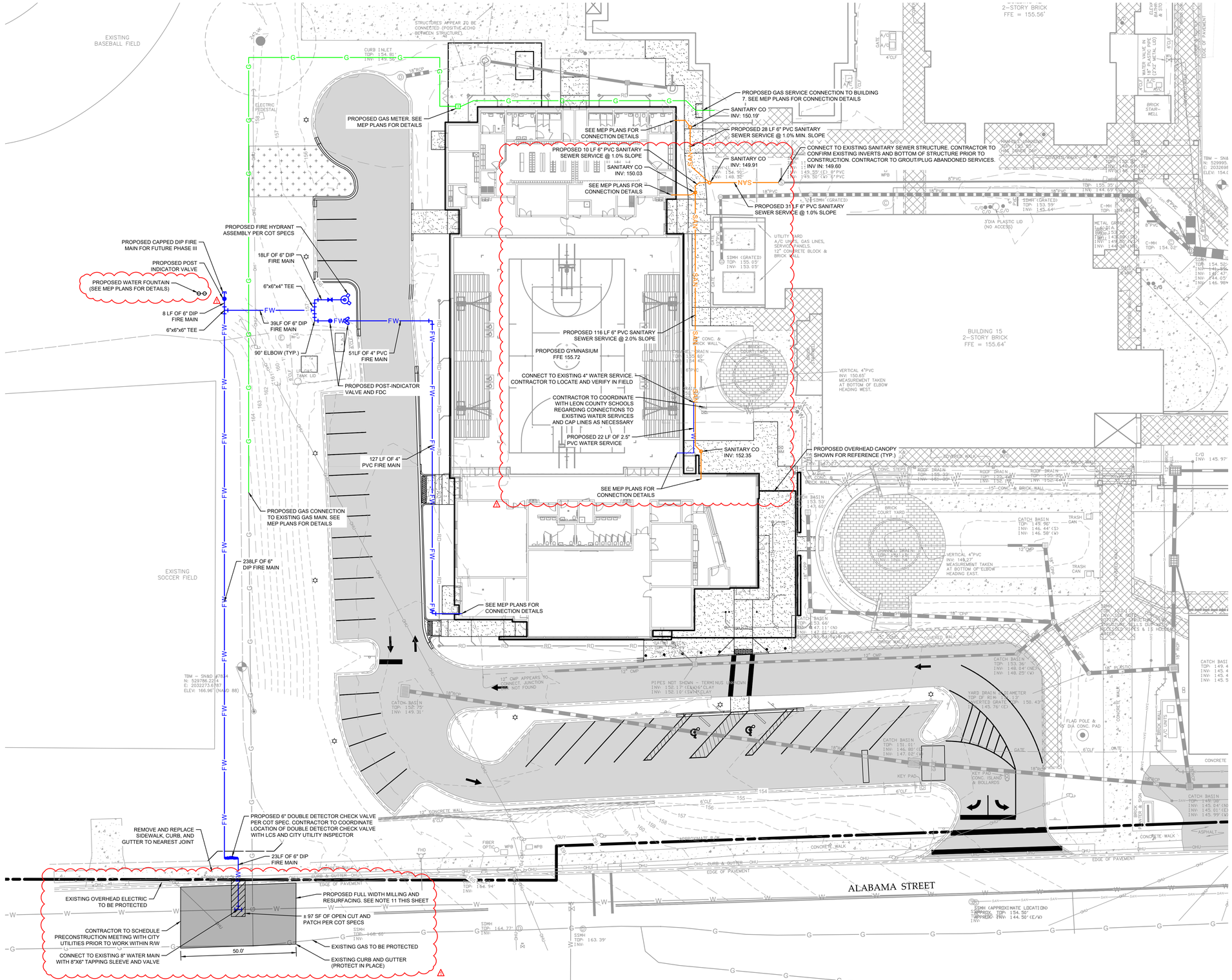

UTILITY NOTES:

1. ALL UTILITY CONSTRUCTION SHALL CONFORM TO THE CITY OF TALLAHASSEE STANDARD SPECIFICATIONS FOR THE DESIGN AND CONSTRUCTION OF WATER AND WASTEWATER FACILITIES, LATEST EDITION.
2. DEPTH OF PVC FIRE MAIN PIPING: 36" MIN. UNDER DRIVING SURFACES, 30" MIN. UNDER NON-DRIVING SURFACES. PVC FIRE MAIN PIPING SHALL NOT BE COVERED UNTIL INSPECTED BY THE CITY OF TALLAHASSEE FIRE DEPARTMENT. FIRE HYDRANTS SHALL BE A MINIMUM OF 24" ABOVE GRADE MEASURED TO THE CENTER OF THE STEAMER NOZZLE. STEAMER NOZZLE TO FACE ROADWAY OR NEAREST POINT OF FIRE DEPARTMENT APPARATUS ACCESSIBILITY WHEN PLACED IN SERVICE, DEPTH OF WATER MAIN: 36" MIN.
3. REFER TO ARCHITECTURAL PLANS FOR EXACT CONNECTIONS TO BUILDING.
4. ALL CLEANOUTS IN TRAFFIC AREAS SHALL MEET H-20 TRAFFIC LOADING REQUIREMENTS.
5. IF REQUIRED, THE OWNER/ DEVELOPER SHALL BE RESPONSIBLE FOR ALL COSTS ASSOCIATED WITH RELOCATION OF ELECTRIC FACILITIES.
6. WATER METERS SHALL BE 30" MIN. FROM BUILDINGS AND SHALL HAVE 18" CLEARENCE MIN FROM CENTER TO CENTER.
7. PROVIDE AN ISOLATION BALL VALVE PRIOR TO EACH METER PER CITY SPECIFICATIONS.
8. CLEARENCES OF 7.5' SHALL BE MAINTAINED TO THE FRONT, SIDES, AND TO THE REAR OF ALL FIRE APPLIANCES (I.E. HYDRANTS, BACKFLOW PREVENTORS, PIV'S, AND FDC,S)
9. CONTRACTOR TO MAINTAIN SERVICE TO SURROUNDING FACILITIES AT ALL TIMES DURING CONSTRUCTION. CONTRACTOR TO COORDINATE WITH LCS.
10. CONTRACTOR SHALL FIELD VERIFY GAS MAIN LOCATION AND DEPTH PRIOR TO CONSTRUCTION AND PROJECT PLANNING.
11. PROPOSED MILLING AND RESURFACING WITHIN CITY OF TALLAHASSEE RIGHT OF WAY TO BE FULL ROAD-WAY WIDTH STARTING 25' PRIOR TO AND EXTENDING 25' BEYOND THE OPEN CUT. MILLING DEPTH TO BE 1.5" BELOW LIP OF CURB AND RESURFACING SHALL MATCH EXISTING CROSS SLOPE. ALL STRIPING SHALL BE RESTORED TO PRECONSTRUCTION CONDITION AND BE THERMOPLASTIC.

PHASE:	DRAWN:	REVIEWED:	DATE:
CONCEPT SCHEMATIC DESIGN	AT	CRS	10/18/2024
DESIGN DEVELOPMENT	AT	CRS	12/20/2024
EARLY DEMOLITION PACKAGE	AT	CRS	03/21/2025
80% CONSTRUCTION DOCS.	AT	CRS	05/09/2025
PERMIT DOCS.			
100% CONSTRUCTION DOCS.	AT	CRS	06/03/2025

ID:	REVISION:	DRAWN:	REVIEWED:	DATE:
1	ADDENDUM #1	AT	CRS	06/03/2025

THESE DRAWINGS AND RENDERINGS ARE INSTRUMENTS OF SERVICE. THE DRAWINGS AND ASSOCIATED COPIES THEREOF, INCLUDING ELECTRONIC MEDIA AND CADD FILES, ARE THE PROPERTY OF ARCHITECTS: LEWIS + WHITLOCK, PLA. THEIR USE, REPRESENTATION OR REPRODUCTION FOR ANY PURPOSE OTHER THAN THE PROJECT SHOWN HEREON IS PROHIBITED WITHOUT THE WRITTEN CONSENT OF THE ARCHITECTS. ALL REPORTS, PLANS, OR SPECIFICATIONS PREPARED OR PLACED ON EACH DRAWING EXHIBIT OR RENDERING ON THIS DOCUMENT AND SHALL NOT BE REMOVED FROM THESE DOCUMENTS

Client: Leon County Schools
3420 W. Tharpe St., Suite 100
Tallahassee, FL 32303

Job Title: Griffin Middle School - Phase 2
800 Alabama St. Tallahassee, FL 32304

Consultant: Kimley»Horn
© 2025 KIMLEY-HORN AND ASSOCIATES, INC.
2610 CENTENNIAL BLVD, SUITE 200
TALLAHASSEE, FLORIDA 32308 PH: 850-553-3000
FIRM NUMBER: FBPE-6591 KIMLEY-HORN.COM

Seal:

Project #: 23483
Phase: 100% Construction Documents

ALW

Architects Lewis + Whitlock
206 West Virginia St.
Tallahassee, Florida 32301
850,942.1718
www.think3d.net

Description: UTILITY PLAN

Sheet No.: C500

CALL 2 WORKING DAYS BEFORE YOU DIG
IT'S THE LAW! DIAL 811
811 Know what's below. Call before you dig.
SUNSHINE STATE ONE CALL OF FLORIDA, INC.

Plotted By: Thornberg, Alex Sheet Set:GRIFFIN MIDDLE SCHOOL PHASE 2 Layout:C500 UTILITY PLAN June 04, 2025 08:01:17am K:\tal_civil\142426006 - griffin ms gym ph 2\Design\CADD\plansheets\C500 UTILITY PLAN.dwg
This document, together with the concepts and designs presented herein, as an instrument of service, is intended only for the specific purpose and client for which it was prepared. Reuse of and improper reliance on this document without written authorization and adaptation by Kimley-Horn and Associates, Inc. shall be without liability to Kimley-Horn and Associates, Inc.

LIGHTING FIXTURE SCHEDULE

FIXTURE MARK	MOUNTING	LAMPS NO.	WATTS	TYPE	LUMENS	DESCRIPTION
EXIT	SURFACE	-	2/FACE (MAX.)	LED	-	THERMOPLASTIC LED EXIT FIXTURE. UNIVERSAL MOUNTING. GREEN LETTERING. DIRECTIONAL CHEVRON ARROWS AS INDICATED. AC ONLY. 120/277. (GUIDE: CHLORIDE VEGW SERIES)
LS4	SURFACE OR SUSPENDED	-	30	4000K LED	4000	4' LED STRIP FIXTURE, NARROW PROFILE STEEL HOUSING WITH BAKED WHITE ENAMEL FINISH AND FROSTED ACRYLIC DIFFUSER. PROVIDE CHAIN KIT AND Y-HANGERS FOR SUSPENDED FIXTURES. NON-DIMMING. 120/277. (GUIDE: DAY-BRITE FSS440L SERIES)
LT22	RECESSED	-	42	4000K LED	5400	2'X2' RECESSED LED PANEL, LOW PROFILE, HIGH PERFORMANCE FIXTURE WITH PREMIUM LEDS. GALVANIZED STEEL HOUSING, WHITE ALUMINUM FRAME, FLAT OPAL LENS. 0-10V DIMMING DOWN TO 1% AND NON-DIMMING. 120/277. COORDINATE WITH CEILING TYPE FOR TRIM ACCESSORIES REQUIRED. (GUIDE: 2FPZ-54L-840-2-DS-UNV-DIM SERIES BY DAY-BRITE)
LT22b	RECESSED	-	23	4000K LED	3000	SAME AS 'LT22', BUT WITH LOWER LUMEN PACKAGE. (GUIDE: 2FPZ-30L-840-2-DS-UNV-DIM)
LWP	SURFACE	-	60	4000K LED	8000	LED WALLPACK FIXTURE, DIE-CAST ALUMINUM HOUSING, PRISMATIC HEAT / IMPACT RESISTANT GLASS LENS, WET LISTED. DARK BRONZE FINISH, 120/277. (GUIDE: WP60 SERIES BY STONCO)
GYM	SUSPENDED @ 24'6" AFF	-	180	5000K LED	28000	LED HIGH BAY FOR GYM. DIE-CAST ALUMINUM HOUSING, WHITE FINISH. CLEAR ACRYLIC LENS. 10' WHIP, WIRE GUARD. SUSPENSION KIT. 0-10V DIMMING DOWN TO 1%. 120/277 VOLT. (GUIDE: RHB3 UFO HIGH BAY SERIES BY ENVISION LED)
DL6	RECESSED	-	23	4000K LED	2500	RECESSED DOWNLIGHT WITH FLANGED TRIM. 0-10V DIMMING DOWN TO 1%. 120/277 VOLT. SHOWER LIGHT STYLE. WET LISTED. (GUIDE: LIGHTOLIER C6RN/C6L259040WZ10U/C6RSLWH)
LED1	PENDANT	-	7/FT	4000K LED	720/FT	4" APERTURE DIRECT LINEAR LED PENDANT FIXTURE. HIGH DIRECT LIGHT OUTPUT WITH FLUSH DOWNLIGHT DIFFUSER. EXTRUDED ALUMINUM BODY. WHITE POWDER COAT FINISH. LENGTHS AS SHOWN. 0-10V DIMMING DOWN TO 1%. 277 VOLT. (GUIDE: FINELITE HP-4 PENDANT D SERIES)
LED1 (EM)	PENDANT	-	7/FT	4000K LED	720/FT	SAME AS 'LED1', BUT WITH 120V DRIVER FOR USE WITH 120V EMERGENCY LIGHTING SYSTEM.
LED2	PENDANT	-	7/FT	4000K LED	800/FT	4" APERTURE INDIRECT/DIRECT LINEAR PENDANT FIXTURE. STANDARD DIRECT OUTPUT WITH FLUSH DOWNLIGHT DIFFUSER. STANDARD INDIRECT OUTPUT WITH WIDESPREAD OPTIC WITH TOP GLOW. EXTRUDED ALUMINUM BODY. CUSTOM RAL FINISH 5010 GENTIAN BLUE. LENGTHS AS SHOWN. 0-10V DIMMING DOWN TO 1%. 277V. (GUIDE: FINELITE HP-4 PENDANT ID SERIES)
LED2 (EM)	PENDANT	-	7/FT	4000K LED	800/FT	SAME AS 'LED2', BUT WITH 120V DRIVER FOR USE WITH 120V EMERGENCY LIGHTING SYSTEM.
LED3	RECESSED	-	6.7/FT	4000K LED	800/FT	EXTERIOR LINEAR RECESSED LED FIXTURE. 2" WIDE, 8' LONG (UNLESS NOTED WITH DIFFERENT LENGTH), EXTRUDED ALUMINUM HOUSING, POWDER COAT BLACK FINISH, WET LISTED. NON-DIMMING. 120/277. EXTRUDED, FLAT, DIFFUSE ACRYLIC LENS. PROVIDE TRIMMED TYPE FOR INSTALL WITHIN COATED ALUMINUM PANEL CEILING. SUPPORT FROM STRUCTURE ABOVE WITH THREADED RODS. FIXTURE SHALL NOT BE DEPENDANT UPON CEILING SYSTEM FOR SUPPORT. COORDINATE WITH CEILING STRUCTURE FOR INSTALL. (GUIDE: MX2R SERIES BY WILLIAMS)
LED4	RECESSED	-	4.6/FT	4000K LED	479/FT	4" APERTURE DIRECT LINEAR LED RECESSED FIXTURE. BOOSTED DIRECT OUTPUT WITH FLUSH DOWNLIGHT DIFFUSER. EXTRUDED ALUMINUM BODY. WHITE POWDER COAT FINISH. LENGTHS AS SHOWN. FLAT END CAP. 0-10V DIMMING DOWN TO 1%. 277V. (GUIDE: FINELITE HP-4 R SERIES)
LED5	RECESSED	-	7.1/FT	4000K LED	725/FT	SAME AS 'LED4', BUT WITH HIGHER LUMEN PACKAGE. (GUIDE: FINELITE HP-4 R SERIES)
LED5 (EM)	RECESSED	-	7.1/FT	4000K LED	725/FT	SAME AS 'LED5', BUT WITH 120V DRIVER FOR USE WITH 120V EMERGENCY LIGHTING SYSTEM.
LED6	RECESSED	-	3.6/FT	4000K LED	336/FT	2" APERTURE DIRECT LINEAR LED RECESSED FIXTURE. STANDARD DIRECT OUTPUT WITH FLUSH DOWNLIGHT DIFFUSER. EXTRUDED ALUMINUM BODY. WHITE POWDER COAT FINISH. LENGTHS AS SHOWN. FLAT END CAP. 0-10V DIMMING DOWN TO 1%. 277V. (GUIDE: FINELITE HP-2 R SERIES)
TL	RECESSED	-	4.4/FT	4000K LED	459/FT	LOW PROFILE, 0.7"Wx0.3"D LINEAR FOR TROPHY CASE. LENGTH AS SHOWN. CLEAR LENS. INCLUDE MOUNTING CLIPS - COORDINATE WITH ARCHITECTURAL DETAIL. 0-10V DIMMING. PROVIDE 0-10V, 120/277 VOLT, REMOTE POWER SUPPLY SIZED FOR TOTAL LOAD. (GUIDE: PURE EDGE LCS.3 SERIES)
HAZ	SURFACE	-	55	4000K LED	7000	4' LED HAZARDOUS LOCATION FIXTURE, (CLASS 1, DIV. 2) COLD ROLLED STEEL HOUSING, POWDER COAT WHITE FINISH, ACRYLIC LENS, STAINLESS STEEL FASTENERS, 120/277 VOLT. (GUIDE: LC DOANE CLS-LED SERIES)
LCAN	SURFACE	-	20	4000K LED	1800	2-FOOT LED CANOPY FIXTURE. EXTRUDED ALUMINUM HOUSING WITH MACHINED END CAPS WITH POLYESTER POWDER-COATED SILVER MATTE TEXTURE FINISH. POLYCARBONATE WHITE LENS. INTERIOR GASKET. STAINLESS STEEL HARDWARE. HIGH-LUMEN OUTPUT, NON-DIMMING. 120 VOLT. (GUIDE: BRA-LED SERIES BY BIRCHWOOD LIGHTING)
LP25	POLE	-	74	4000K LED	13,500	FIXTURE: LED LUMINAIRE, DIE CAST ALUMINUM ALLOY HOUSING WITH INTEGRAL HEAT SINK, IP65 RATING HOUSING, TYPE 4 WIDE DISTRIBUTION, ARM MOUNT, BLACK FINISH, SURGE PROTECTOR, AUTOMATIC PROFILE DIMMING WITH PIR SENSOR FOR MOTION RESPONSE TO DIM TO 50% OUTPUT WHEN NO MOTION IS DETECTED FOR 5 MINUTES. 277 VOLT. (GUIDE: GARDCO OPF-M SERIES) POLE: 25' ROUND TAPERED ALUMINUM POLE, WITH ANCHOR BASE PLATE, 3"x5" HANDHOLE, ANCHOR BOLTS, GALVANIZED HARDWARE, HOLES DRILLED FOR SINGLE FIXTURE NOTED ABOVE, AND POLYESTER POWDER COAT BLACK FINISH. (GUIDE: UNITED LIGHTING STANDARDS)

LIGHTING FIXTURE SCHEDULE NOTES

1. ALL LIGHTING FIXTURES SHALL CONFORM TO UL 1598. ALL LED FIXTURES SHALL CONFORM TO UL 8750.
2. EXACT LOCATION OF FIXTURES SHALL BE AS SHOWN ON REFLECTED CEILING PLANS.
3. LOCATE FIXTURES IN MECHANICAL AND ELECTRICAL ROOMS TO AVOID EQUIPMENT AND PROVIDE EFFICIENT LIGHTING FOR THE TASK INVOLVED. CHAIN SUSPEND AS NECESSARY FOR OPTIMUM, UNIFORM ILLUMINATION.
4. MOUNTING HEIGHTS INDICATED ARE ABOVE FINISHED FLOOR.
5. ALL EXIT SIGNAGE AND EMERGENCY UNIT EQUIPMENT SHALL BE SUITABLE FOR OPERATION AT 120 OR 277 VOLTS.
6. NORMAL POWERED LIGHTS ARE 277V AND EMERGENCY POWERED LIGHTS ARE 120V, PROVIDE PROPER FIXTURES / DRIVERS.
7. INSTALL EXIT LIGHTS WITH 4' MINIMUM FMC CONNECTION TO OUTLET BOX. RIGID CONDUIT OR TUBING SHALL NOT BE ATTACHED DIRECTLY TO EXIT FIXTURE HOUSING.
8. ALL RECESSED FIXTURES SHALL BE COMPLETE WITH APPROPRIATE FRAME FOR THE CEILING TYPE IN WHICH IT SHALL BE INSTALLED. A PARTICULAR FIXTURE MARK MAY BE SHOWN IN MORE THAN ONE TYPE CEILING. IT SHALL BE THE CONTRACTOR'S RESPONSIBILITY TO COORDINATE WITH CEILING TYPES.
9. ALL FLUSH MOUNTED FIXTURES SHALL BE SUPPORTED FROM THE STRUCTURE (2 PLACES MINIMUM) AND SHALL NOT BE DEPENDENT ON THE HUNG CEILINGS OR CEILING GRIDS FOR THEIR SUPPORT. SUPPORT RECESSED TROFFER FIXTURES FROM AT MINIMUM TWO OPPOSITE CORNERS USING STEEL SUSPENSION WIRES TO THE STRUCTURE. IF RECESSED FIXTURES ARE SUPPORTED BY LAY-IN CEILING GRID, FIXTURES SHALL ALSO BE SECURED BY MECHANICAL MEANS TO CEILING GRID STRUCTURE. REFER TO DETAIL.
10. CLEAN ALL LIGHTING FIXTURES AT THE END OF THE PROJECT. USE SOFT FABRIC AND CLEAR WATER. DO NOT USE CLEANSERS.
11. CONDUCT FUNCTIONAL TESTING OF LIGHTING CONTROLS. CONFIRM THAT OCCUPANCY SENSOR PLACEMENT, SENSITIVITY AND TIME-OUT ADJUSTMENTS YIELD EXPECTED PERFORMANCE. CONFIRM THAT TIME SWITCHES AND PROGRAMMABLE SCHEDULE CONTROLS ARE SET OR PROGRAMMED CORRECTLY AND TURN LIGHTS OFF. CONFIRM SENSORS ACTUALLY TURN LIGHTS OFF.
12. CHECK EM LIGHTING OPERATION BY REMOVING NORMAL POWER.
13. APPLY A SMALL RED ADHESIVE DOT TO FLANGE OF EM LIGHTS.
14. SOME FIXTURE TYPES WILL BE USED WITH 0-10V DIMMING AND ALSO NON-DIMMING APPLICATIONS. REFER TO FLOOR PLAN AND CONTROLS AND PROVIDE PROPER FIXTURES AS REQUIRED.

SHEET NOTES:

1. WALL-MOUNT OCCUPANCY SENSORS IN JANITOR CLOSETS, SINGLE RESTROOMS, AND STORAGE ROOMS SHALL BE PROGRAMMED FOR MANUAL 'ON' AND MANUAL/AUTOMATIC 'OFF'.
2. IN SPACES WITH HARD CEILINGS, ALL JUNCTION BOXES AND ELECTRICAL CONNECTIONS SHALL BE LOCATED WHERE ACCESSIBLE. PROVIDE ACCESS PANELS AS REQUIRED. COORDINATE WITH ARCHITECTURAL. JUNCTION BOXES AND ELECTRICAL CONNECTIONS SHALL NOT BE LOCATED WHERE INACCESSIBLE.
3. FIXTURES IN MECHANICAL ROOMS SHALL BE ARRANGED FOR BEST LIGHTING OF THE SPACE AND TO CLEAR EQUIPMENT, AVOID DUCTS, AND COORDINATE WITH STRUCTURAL.
4. LIGHT SWITCH IN ELECTRICAL, BOILER, AND MECHANICAL ROOMS TO BE ILLUMINATED TYPE MANUAL SWITCH. ('ON' WHEN LIGHTS ARE 'OFF')
5. REFER TO SYMBOL LEGEND FOR DESCRIPTION OF LIGHTING CONTROL SCHEME FOR SPACES WITH DIMMING WALL-MOUNT OCCUPANCY SENSORS.
6. INSTALL TROPHY CASE LOW VOLTAGE LIGHTS AND 0-10V REMOTE DRIVERS. INSTALL ALL WIRING FOR A COMPLETE SYSTEM. EXTEND LOW VOLTAGE WIRING FROM REMOTE DRIVER DOWN INTO TROPHY CASE TO LIGHTS. COORDINATE WITH TROPHY CASE SHOP DRAWINGS FOR WIRING, FIXTURE, AND DRIVER INSTALL. CONNECT TROPHY CASE DRIVERS TO LOBBY ROOM CONTROLLER FOR ON-OFF-DIM CONTROL ALONG WITH LOBBY LIGHTS.
7. PROVIDE WHITE WIRE GUARDS FOR CEILING MOUNTED OCCUPANCY SENSORS AND EXIT SIGNS IN GYMNASIUM.
8. ALL 2X2 LIGHTS ARE TYPE 'LT22', UNLESS NOTED OTHERWISE.
9. ELECTRICAL PLAN SHEETS ARE PRINTED WITHOUT ROOM NAMES FOR CLARITY. REFER TO ARCHITECTURAL FOR ROOM NAMES AND NUMBERS.

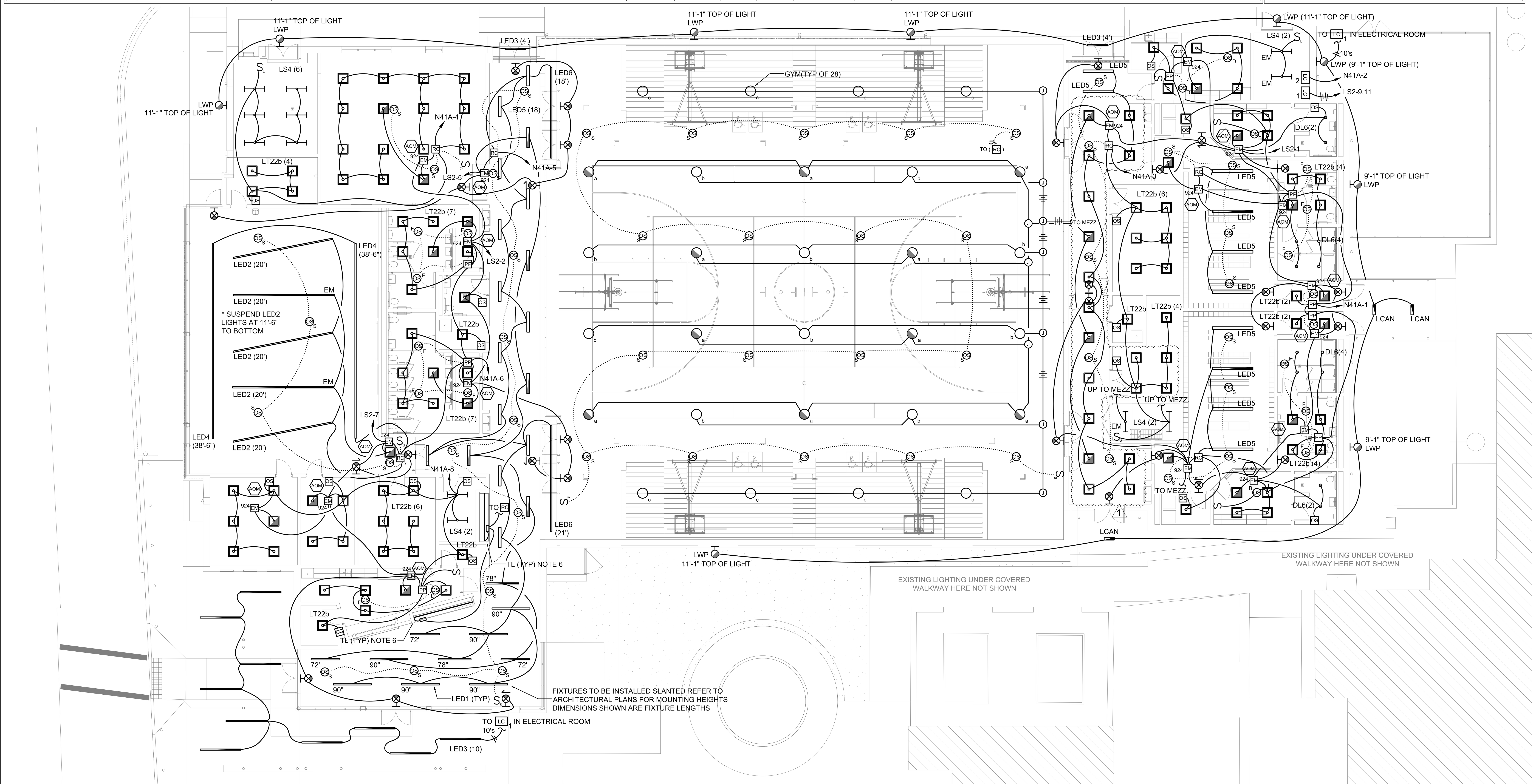

Gym Lighting Plan

Scale: 3/32" = 1'-0"

This item has been digitally signed and sealed by Brian K. Wallace, PE, on 06/03/2025. Printed copies of this document are not considered signed and sealed and the signatures must be verified on any electronic copies.

BRIAN K. WALLACE LICENSE No. 75562 STATE OF FLORIDA PROFESSIONAL ENGINEER

PHASE:	DRAWN:	REVIEWED:	DATE:	ID:	REVISION:	DRAWN:	REVIEWED:	DATE:
CONCEPT SCHEM. DESIGN				1	Addendum #1	BW	BW	6/3/2025
DESIGN DEVELOPMENT	AC	BW	12/20/2024					
EARLY DEMOLITION PACKAGE								
80% CONSTRUCTION DOCS.	AC	BW	03/21/2025					
PERMIT DOCS.								
100% CONSTRUCTION DOCS.	AC	BW	05/09/2025					

THESE DRAWINGS AND RENDERINGS ARE INSTRUMENTS OF SERVICE. THE DRAWINGS AND ASSOCIATED COPIES THEREOF , INCLUDING ELECTRONIC MEDIA AND CADD FILES, ARE THE PROPERTY OF ARCHITECTS: LEWIS + WHITLOCK, P.A.A. THEIR USE, REPRESENTATION OR REPRODUCTION FOR ANY PURPOSE EXCEPT BY WRITTEN AGREEMENT WITH THE ARCHITECT IS PROHIBITED. THIS COPYRIGHT NOTIFICATION SHALL BE TRUE AS IF DIRECTLY PLACED ON EACH DRAWING EXHIBIT OR RENDERING ON THIS DOCUMENT AND SHALL NOT BE REMOVED FROM THESE DOCUMENTS

Client:
Leon County Schools
3420 W. Tharpe St., Suite 100
Tallahassee, FL 32303

Job Title:
Griffin Middle School - Phase 2
800 Alabama St. Tallahassee, FL 32304

Consultant:
McGINNISS + FLEMING ENGINEERING

Project #: 23103

Phase: 100% Construction Documents

ALW
Architects Lewis + Whitlock
206 West Virginia St.
Tallahassee, Florida 32301
850.942.1718
www.think3d.net

Description:
Electrical Gym Lighting Plan

Sheet No.:
E3.0

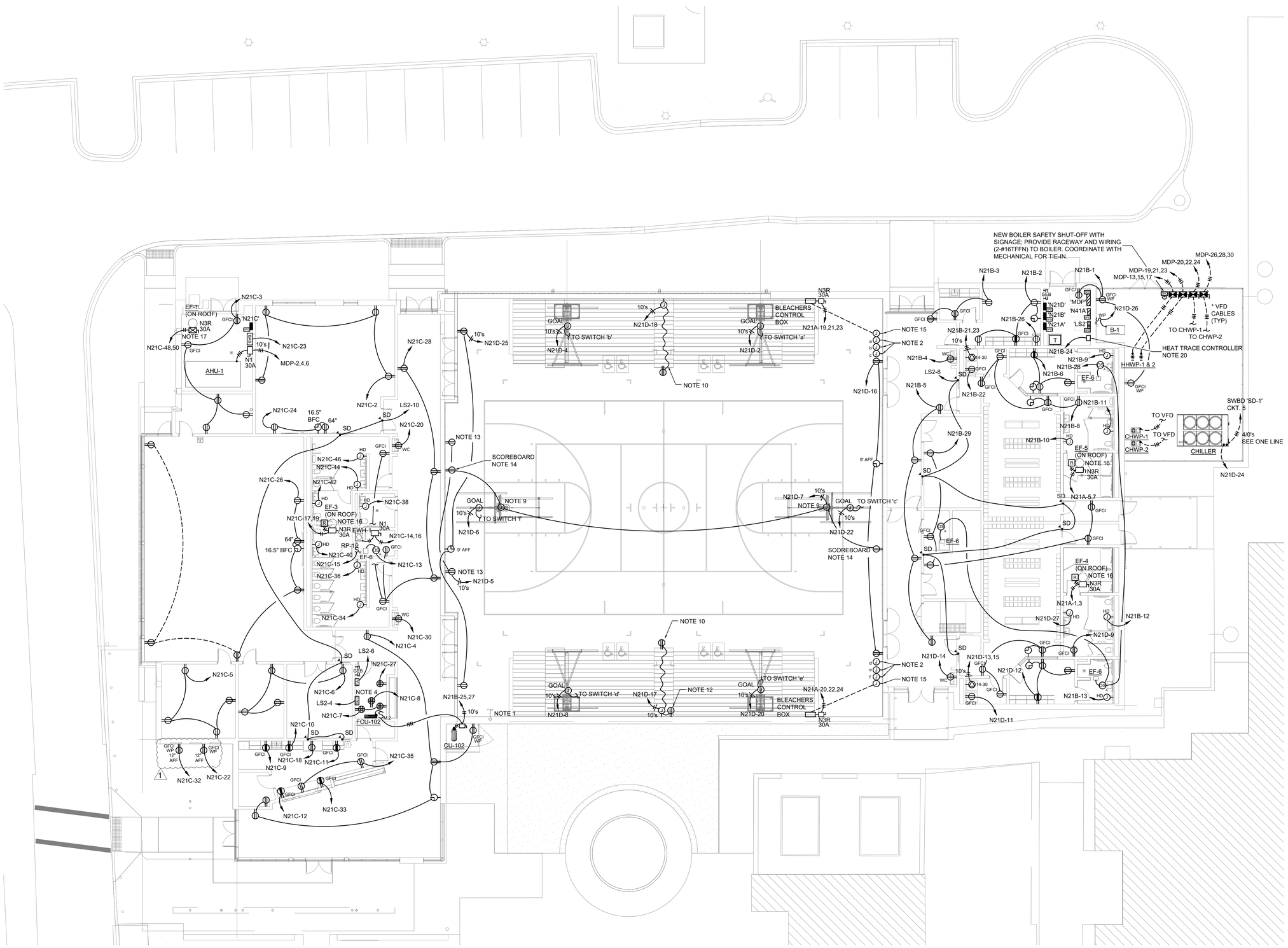

1 Gym Power Plan

Scale: 3/32" = 1'-0"

SHEET NOTES:

1. DOMESTIC WATER PIPE ENTERS BUILDING WHERE NOTED. COORDINATE GROUND CONNECTION FROM GROUND BUSBAR TO THIS LOCATION WITHIN 5' OF ENTRY TO BUILDING. REFER TO ONE LINE DIAGRAM.
2. KEYED CONTROL SWITCH JUNCTION BOX FOR BB GOALS. ROUTE 3/4" C. TO DESIGNATED GOAL. SWITCH TO BE PROVIDED WITH GOALS, INSTALLED AND WIRED BY CONTRACTOR. INSTALL AT 48" AFF.
3. IN SPACES WITH HARD CEILINGS, ALL JUNCTION BOXES AND ELECTRICAL CONNECTIONS SHALL BE LOCATED WHERE ACCESSIBLE. PROVIDE ACCESS PANELS AS REQUIRED OR ENSURE ALL JUNCTION BOXES ARE LOCATED OUTSIDE OF AREA WITH HARD CEILINGS. COORDINATE WITH ARCHITECTURAL. JUNCTION BOXES AND ELECTRICAL CONNECTIONS SHALL NOT BE LOCATED WHERE INACCESSIBLE.
4. INSTALL QUAD-RECEPTACLE ON IT CABINET WITH FLEX CONDUIT OVER FROM ADJACENT WALL.
5. ALL EXTERIOR DISCONNECT SWITCHES OR VFD's TO BE NEMA 3R. ROUTE CONDUIT BELOW GRADE FROM SWITCHES OR VFD's TO EQUIPMENT. NOTE THAT CABLE FROM VFD's TO PUMPS ARE VFD CABLES. REFER TO DETAIL FOR CABLE AND CONDUIT SIZE.
6. ELECTRICAL CONTRACTOR SHALL PROVIDE THE FOLLOWING CONTROLS RACEWAY WITH PULL STRING: 3/4" C. FROM EXTERIOR LIGHTING CONTROL CONTACTORS (x2) TO BAS PANEL, 3/4" C. FROM EACH VFD TO BAS PANEL, 3/4" C. FROM EACH VFD TO CORRESPONDING MOTOR, 3/4" C. FROM EACH EF CONTAINING A CONTROL RELAY OR STARTER TO BAS PANEL, 3/4" C. FROM CHILLER CONTROL PANEL TO BAS PANEL, 3/4" C. FROM BOILER CONTROL PANEL TO BAS PANEL, AND 3/4" C. FROM BAS PANEL TO EACH THERMOSTAT J-BOX. REFER TO MECHANICAL DRAWINGS FOR THERMOSTAT LOCATIONS. CONTROLS RACEWAY IS NOT SHOWN ON PLAN, BUT SHALL BE PROVIDED AS NOTED HERE. ALL OTHER CONTROLS RACEWAY BY CONTROLS VENDOR.
7. ALL EQUIPMENT DISCONNECT SWITCHES ARE RATED AT 30A, UNLESS NOTED OTHERWISE. INTERIOR SWITCHES ARE NEMA 1, EXTERIOR ARE NEMA 3R.
8. ALL OCCUPANCY SENSORS CONTROLLING RESTROOM EXHAUST FANS SHALL BE PROGRAMMED TO RUN FAN FOR 10 MINUTES AFTER OCCUPANT LEAVES THE SPACE.
9. PROVIDE 120V, 20A POWER TO SHOT CLOCK ON GOAL BACKBOARD. COORDINATE WITH SYSTEM PROVIDED FOR POWER CONNECTION POINT.
10. PROVIDE 10/3 (H,N,G) SOOW TYPE CABLE BENEATH BLEACHERS, SECURED TO EACH BLEACHER STEP. FROM JUNCTION BOX AT WALL TO OUTLET BOX AT BOTTOM BLEACHER PANEL. PROVIDE GLAND FITTINGS AT EACH JUNCTION BOX CONNECTION. CABLE SHALL HAVE SUFFICIENT SLACK TO ALLOW BLEACHERS TO FULLY EXTEND. COORDINATE WITH BLEACHERS VENDOR FOR PROPERLY SECURING CABLE TO BLEACHER STRUCTURE. ENSURE CABLE IS NOT INSTALLED WHERE IT WILL BE DAMAGED BY BLEACHER MOVING PARTS.
11. PROVIDE WHITE WIRE GUARDS FOR CLOCKS WITHIN GYM.
12. PROVIDE RECEPTACLE AT 7' ABOVE TOP OF BLEACHERS FOR HUDDLE AND PIXALOT CAMERA SYSTEMS POWER.
13. PROVIDE RECEPTACLE WITHIN SPEAKER ENCLOSURE FOR SPEAKER POWER. COORDINATE WITH SPEAKER PROVIDED FOR RACEWAY ENTRY AND RECEPTACLE LOCATION.
14. COORDINATE FINAL MOUNTING HEIGHT OF RECEPTACLE SERVING SCOREBOARD WITH BOARD PROVIDER PRIOR TO OUTLET BOX ROUGH-IN.
15. KEYED CONTROL SWITCH JUNCTION BOX (4"x4"x3"D) WITH 3/4" C. BACK TO BLEACHER CONTROL BOX. SWITCH TO BE PROVIDED WITH BLEACHERS, INSTALLED AND WIRED BY CONTRACTOR. INSTALL AT 48" AFF.
16. PROVIDE RELAY RATED FOR NOTED EXHAUST FAN VOLTAGE (208V, 1Ø) WITH 24V COIL FOR CONNECTION TO BUILDING AUTOMATION SYSTEM.
17. PROVIDE FULL-VOLTAGE, NON-REVERSING STARTER FOR NOTED EXHAUST FAN, SIZED FOR FAN HP WITH 24V COIL FOR CONTROL BY BAS.
18. ALL RECEPTACLES PROVIDED ON PROJECT SHALL BE SAFETY "TAMPERPROOF" TYPE.
19. SWITCH FOR BOILER SHALL HAVE PAD-LOCK CLIP FOR LOCKING IN THE OFF POSITION.
20. PROVIDE HEAT TRACE (SEE SCHEDULE FOR SIZING) FOR CHILLER / BOILER MAKE-UP WATER PIPING. PROVIDE CONTROLLER, RTPC POWER CONNECTION AT HEAT TRACE WIRING, LINE SENSOR, AMBIENT TEMP SENSOR, AND BRANCH CIRCUIT WIRING IN RACEWAY FOR COMPLETE SYSTEM. PROVIDE 3/4" C. FROM HEAT TRACE CONTROLLER TO BAS PANEL IN MECHANICAL ROOM FOR CONTROLS AND MONITORING WIRING. COORDINATE WITH MECHANICAL CONTRACTOR FOR PROPER INSTALLATION. SEE SCHEDULE.
21. ELECTRICAL PLAN SHEETS ARE PRINTED WITHOUT ROOM NAMES FOR CLARITY. REFER TO ARCHITECTURAL FOR ROOM NAMES AND NUMBERS.

PHASE:	DRAWN:	REVIEWED:	DATE:	ID:	REVISION:	DRAWN:	REVIEWED:	DATE:
CONCEPT SCHEM. DESIGN								
DESIGN DEVELOPMENT	AC	BW	12/20/2024	1	Addendum #1	BW	BW	6/3/2025
EARLY DEMOLITION PACKAGE								
80% CONSTRUCTION DOCS.	AC	BW	03/21/2025					
PERMIT DOCS.								
100% CONSTRUCTION DOCS.	AC	BW	05/08/2025					

THESE DRAWINGS AND REFERENCES ARE INSTRUMENTS OF SERVICE. THE DRAWINGS AND ASSOCIATED DATA THEREOF, INCLUDING ELECTRONIC MEDIA AND CADD FILES, ARE THE PROPERTY OF ARCHITECT SLEVIG + WHITLOCK, P.A. (THE "USE REPRESENTATION"). REPRODUCTION OR DISCLOSURE FOR ANY PURPOSE EXCEPT BY WRITTEN AGREEMENT WITH THE ARCHITECT IS PROHIBITED. THIS COPYRIGHT NOTIFICATION SHALL BE TRUE AS IF DIRECTLY PLACED ON EACH DRAWING EXHIBIT OR RENDERING ON THIS DOCUMENT AND SHALL NOT BE REMOVED FROM THESE DOCUMENTS

Client:

Leon County Schools
3420 W. Tharpe St., Suite 100
Tallahassee, FL 32303

Job Title:

Griffin Middle School - Phase 2
800 Alabama St. Tallahassee, FL 32304

Consultant:

McGINNISS FLEMING ENGINEERING
JON BARDER, PE 55427 BRIAN WALLACE, PE 75562
420 LAKE ELLEN DRIVE, LAKELAND, FL 33801
863.687.1500 MFE-INC.COM

BRIAN K. WALLACE LICENSE No. 75562 STATE OF FLORIDA PROFESSIONAL ENGINEER

This item has been digitally signed and sealed by Brian K. Wallace, PE, on 05/23/2025. Printed copies of this document are not considered signed and sealed and the signatures must be verified on any electronic copies.

Project #: 23083

Phase: 100% Construction Documents

ALW

Architects Lewis + Whitlock
206 West Virginia St.
Tallahassee, Florida 32301
850.942.1718
www.think3d.net

Description:
Electrical Gym Power Plan

Sheet No.:
E3.1

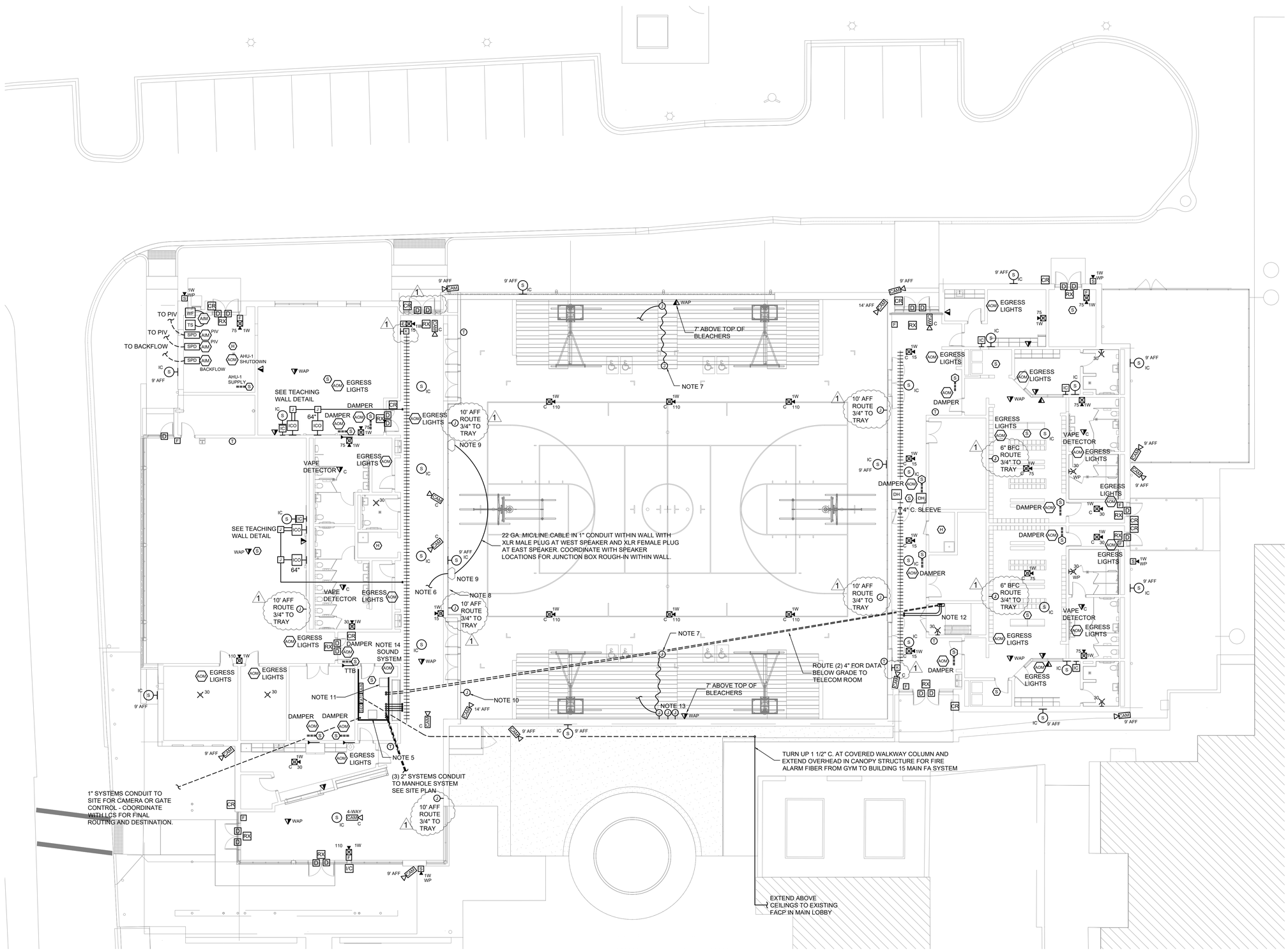

1 Gym Systems Plan

Scale: 3/32" = 1'-0"

SHEET NOTES:

1. PROVIDE DEDICATED #6 CU IN 3/4" CONDUIT FROM NEW IT CABINET TO GROUND BUS. PROVIDE GROUND LUG AND COORDINATE WITH NETWORK VENDOR FOR PROPER GROUND CONNECTION TO IT CABINET. SEE GROUND DETAIL.
2. CLOCKS ARE SHOWN ON NEW WORK POWER PLAN.
3. COORDINATE FINAL CABLE TRAY ROUTING WITH HVAC DUCTS AND CHANGING CEILING HEIGHTS. TRAY SHALL GENERALLY BE INSTALLED 8" - 12" ABOVE LAY-IN CEILING.
4. PROVIDE WHITE WIRE GUARDS FOR FIRE ALARM NOTIFICATION APPLIANCES, CAMERAS, WIRELESS ACCESS POINTS, CLOCKS, AND WIRELESS MIC RECEIVER ANTENNAS IN GYMNASIUM.
5. NEW FREE-STANDING IT VENTILATED CABINET SIZED FOR ALL SYSTEM COMPONENTS IS PROVIDED BY OWNER'S NETWORK VENDOR. CABINET SHALL ACCOMMODATE ALL NEW SYSTEM EQUIPMENT ADDED AS PART OF NEW WORK. (IE. DATA, NETWORK, SECURITY, ACCESS CONTROL, ETC.) COORDINATE ALL SYSTEMS RACEWAY AT NEW CABINET LOCATION WITH OWNER'S NETWORK VENDOR. RACEWAY SHALL ROUTE FROM FIELD DEVICES TO TTB AND STUB DOWN NEAR CABINET. PROVIDE INSULATED BUSHING ON ALL CONDUITS AT TTB.
6. INSTALL 22 GA. MIC/LINE AUDIO CABLE IN 1" CONDUIT FROM SPEAKER TO SOUND CABINET. PROVIDE 1/4" TRS PLUG AT SOUND CABINET AND XLR MALE PLUG AT SPEAKER.
7. PROVIDE J-BOX FLUSH MOUNTED IN BOTTOM BLEACHER PANEL ADJACENT TO RECEPTACLE FOR SOUND BOARD CONTROLS. PROVIDE 3-PIN XLR JACK IN BOX AT BOTTOM PANEL AND AUDIO CABLE BACK TO SOUND CABINET FOR 'SOUND SYSTEM INPUT - BALANCED XLR LINE LEVEL'. CABLE TO BE PER SOUND SYSTEM MANUFACTURER RECOMMENDATIONS. SECURE CABLING TO EACH BLEACHER STEP, FROM J-BOX IN BOTTOM PANEL TO J-BOX AT WALL. CABLE SHALL HAVE SUFFICIENT SLACK TO ALLOW BLEACHERS TO FULLY EXTEND AND FOR CABLE TO COIL WHEN BLEACHERS ARE CLOSED. COORDINATE WITH BLEACHERS VENDOR FOR PROPERLY SECURING CABLE TO BLEACHER STRUCTURE. ENSURE CABLE IS NOT INSTALLED WHERE IT WILL GET TWISTED OR BE DAMAGED BY BLEACHER MOVING PARTS. ROUTE 1" CONDUIT FROM J-BOX IN WALL TO CABLE TRAY AND EXTEND AUDIO CABLE TO SOUND SYSTEM CABINET.
8. SOUND SYSTEM WIRELESS MIC ANTENNA RECEIVERS SHALL BE WALL-MOUNTED WHERE NOTED IN THE GYM WITH WIRING IN CONDUIT BACK TO NEW SOUND CABINET IN IT CLOSET. INSTALL AT 10' AFF WHERE SHOWN. CONTRACTOR SHALL PROVIDE PROTECTIVE WIRE GUARDS OVER WALL-MOUNTED ANTENNAS. PROVIDE BALANCED ANALOG LINE-LEVEL AUDIO WIRING WITH TERMINATIONS AS REQUIRED ON EACH END.
9. PROVIDE SPEAKER AS SPECIFIED AT LOCATION SHOWN INSTALLED AT 15' TO BOTTOM.
10. PROVIDE JUNCTION BOX WITH XLR INPUT PLATE AND WIRING PER SYSTEM MANUFACTURER IN RACEWAY BACK TO NEW SOUND CABINET FOR WIRED AUDIO INPUT. INSTALL AT 18" AFF.
11. INSTALL NEW AUDIO SOUND SYSTEM CABINET IN IT CLOSET. PROVIDE REQUIRED WIRING BETWEEN CABINET AND SPEAKER, MIC JACKS, AND WIRELESS RECEIVERS. CABINET SHALL BE LOCKABLE.
12. PROVIDE 24"x24"x8"D PULLBOX WITH (2) 4" CONDUIT ROUTED DOWN BELOW GRADE TO TELECOM ROOM AND (2) 4" CONDUIT ROUTED OVERHEAD TO CABLE TRAY IN CORRIDOR. PROVIDE NAMEPLATE FOR BOX COVER.
13. PROVIDE JUNCTION BOX AND 1" CONDUIT BACK TO TTB FOR BOTH HUDDLE CAMERA SYSTEM AND PIXALOT CAMERA SYSTEM. INSTALL AT 7' ABOVE TOP OF BLEACHERS.
14. NEW SOUND SYSTEM SHALL HAVE INTERFACE WITH FIRE ALARM SYSTEM FOR SHUTTING DOWN AUDIO OUTPUT WHEN FIRE ALARM IS ACTIVE.
15. ELECTRICAL PLAN SHEETS ARE PRINTED WITHOUT ROOM NAMES FOR CLARITY. REFER TO ARCHITECTURAL FOR ROOM NAMES AND NUMBERS.

PHASE:	DRAWN:	REVIEWED:	DATE:	ID:	REVISION:	DRAWN:	REVIEWED:	DATE:
CONCEPT SCHEM. DESIGN								
DESIGN DEVELOPMENT	AC	BW	12/20/2024	1	Addendum #1	BW	BW	5/3/2025
EARLY DEMOLITION PACKAGE								
80% CONSTRUCTION DOCS.	AC	BW	03/21/2025					
PERMIT DOCS.								
100% CONSTRUCTION DOCS.	AC	BW	05/08/2025					

THESE DRAWINGS AND REFERENCES, ARE INSTRUMENTS OF SERVICE. THE DRAWINGS AND ASSOCIATED DATA THEREOF, INCLUDING ELECTRONIC MEDIA AND DATA FILES, ARE THE PROPERTY OF ARCHITECT SLEWIS + WHITLOCK, P.A. (THE "ARCHITECT"). REPRESENTATION OR REPRODUCTION FOR ANY PURPOSE EXCEPT BY WRITTEN AGREEMENT WITH THE ARCHITECT IS PROHIBITED. THIS COPYRIGHT NOTIFICATION SHALL BE TRUE AS IF DIRECTLY PLACED ON EACH DRAWING EXHIBIT OR RENDERING ON THIS DOCUMENT AND SHALL NOT BE REMOVED FROM THESE DOCUMENTS

Client:

Leon County Schools
3420 W. Tharpe St., Suite 100
Tallahassee, FL 32303

Job Title:

Griffin Middle School - Phase 2
800 Alabama St. Tallahassee, FL 32304

Consultant:

McGINNISS + FLEMING ENGINEERING
JON BARBER, PE 15427 BRIAN WALLACE, PE 75562
KEVIN BAKER, PE 75331 ALEX LANGLEY, PE 75331
MFE.INC.COM 850.681.6424

BRIAN K. WALLACE
LICENSE
No. 75562
STATE OF FLORIDA
PROFESSIONAL ENGINEER

This item has been digitally signed and sealed by Brian K. Wallace, PE, on **05/03/2025**. Printed copies of this document are not considered signed and sealed and the signatures must be verified on any electronic copies.

Project #: **23.083**

Phase: **100% Construction Documents**

ALW

Architects Lewis + Whitlock
206 West Virginia St.
Tallahassee, Florida 32301
850.942.1718
www.think3d.net

Description:
Electrical Gym Systems Plan

Sheet No.:
E3.2

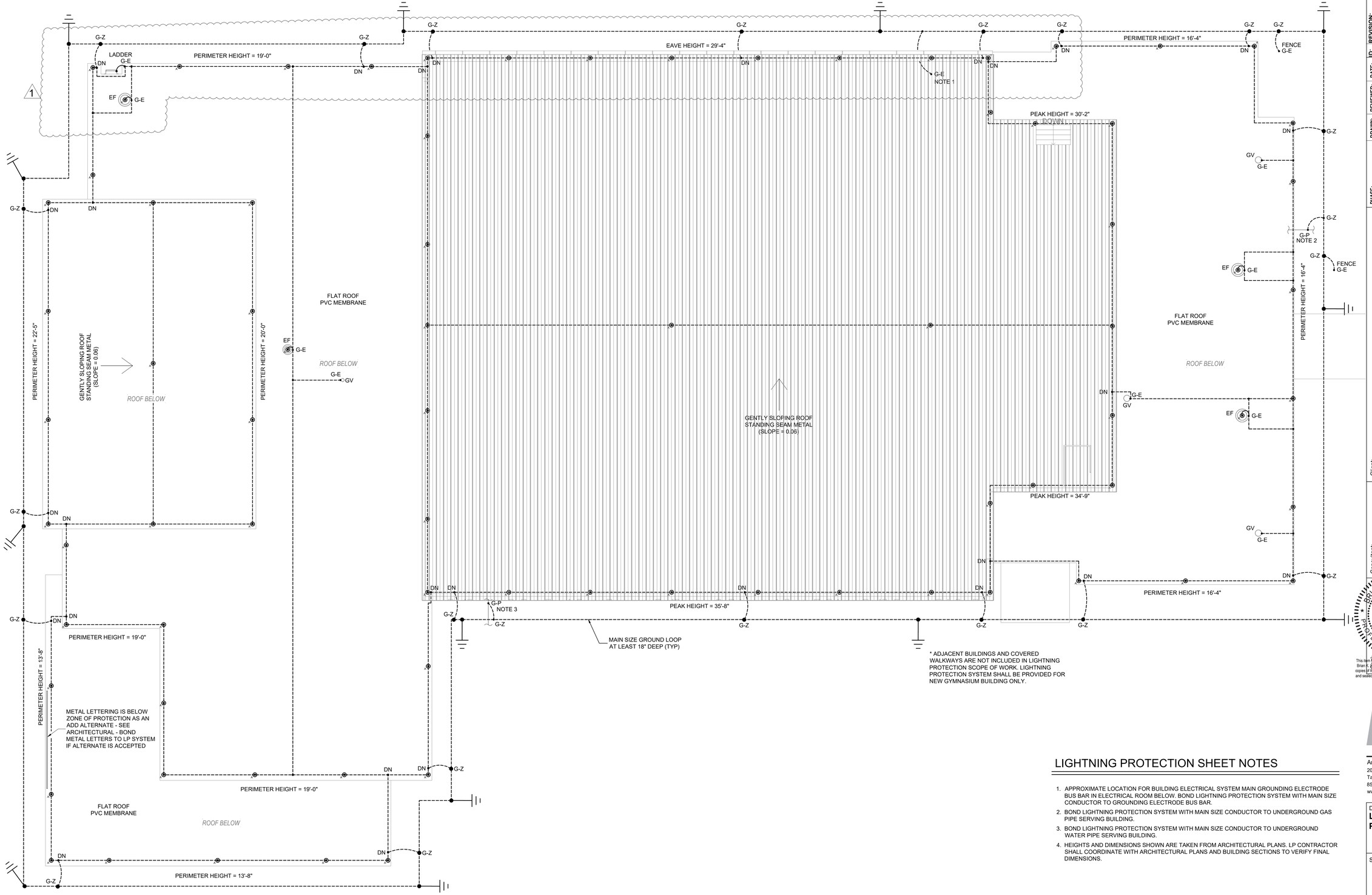

LIGHTNING PROTECTION SHEET NOTES

1. APPROXIMATE LOCATION FOR BUILDING ELECTRICAL SYSTEM MAIN GROUNDING ELECTRODE BUS BAR IN ELECTRICAL ROOM BELOW. BOND LIGHTNING PROTECTION SYSTEM WITH MAIN SIZE CONDUCTOR TO GROUNDING ELECTRODE BUS BAR.
2. BOND LIGHTNING PROTECTION SYSTEM WITH MAIN SIZE CONDUCTOR TO UNDERGROUND GAS PIPE SERVING BUILDING.
3. BOND LIGHTNING PROTECTION SYSTEM WITH MAIN SIZE CONDUCTOR TO UNDERGROUND WATER PIPE SERVING BUILDING.
4. HEIGHTS AND DIMENSIONS SHOWN ARE TAKEN FROM ARCHITECTURAL PLANS. LP CONTRACTOR SHALL COORDINATE WITH ARCHITECTURAL PLANS AND BUILDING SECTIONS TO VERIFY FINAL DIMENSIONS.

PHASE:	DRAWN:	REVIEWED:	DATE:	ID:	REVISION:	DRAWN:	REVIEWED:	DATE:
CONCEPT SCHEM. DESIGN	AC	BW	12/20/2024	1	Addendum #1	BW	BW	5/3/2025
DESIGN DEVELOPMENT								
EARLY DEMOLITION PACKAGE	AC	BW	03/21/2025					
80% CONSTRUCTION DOCS.								
PERMIT DOCS.								
100% CONSTRUCTION DOCS.	AC	BW	05/08/2025					

THESE DRAWINGS AND RENDERINGS ARE INSTRUMENTS OF SERVICE. THE DRAWINGS AND ASSOCIATED DATA THEREOF, INCLUDING ELECTRONIC MEDIA AND CADD FILES, ARE THE PROPERTY OF ARCHITECT SLEVIGS + WHITLOCK, P.A. (THE "USE REPRESENTATION") OR ANY REPRODUCTION OR USE FOR ANY PURPOSE EXCEPT BY WRITTEN AGREEMENT WITH THE ARCHITECT IS PROHIBITED. THIS COPYRIGHT NOTIFICATION SHALL BE TRUE AS IF DIRECTLY PLACED ON EACH DRAWING EXHIBIT OR RENDERING ON THIS DOCUMENT AND SHALL NOT BE REMOVED FROM THESE DOCUMENTS

Client:
Leon County Schools
3420 W. Tharpe St., Suite 100
Tallahassee, FL 32303

Job Title:
Griffin Middle School - Phase 2
800 Alabama St. Tallahassee, FL 32304

Consultant:
McGINNISS FLEMING ENGINEERING
JON BARBER, PE 55427 BRIAN WALLACE, PE 75562
600 CLEVELAND ST. - SUITE 1000 CLEARWATER, FL 33755
850.681.6424 MFE-INC.COM

BRIAN K. WALLACE
LICENSE
No. 75562
STATE OF FLORIDA
PROFESSIONAL ENGINEER

This item has been digitally signed and sealed by Brian K. Wallace, PE, on 05/03/2025. Printed copies of this document are not considered signed and sealed and the signatures must be verified on any electronic copies.

Project #: 23483

Phase: 100% Construction Documents

ALW

Architects Lewis + Whitlock
206 West Virginia St.
Tallahassee, Florida 32301
850.942.1718
www.think3d.net

Description:
Lightning Protection Plan

Sheet No.:
E6.1

AHU SCHEDULE - VARIABLE AIR VOLUME (VAV)

DESIGNATION		AHU-1	AHU-2	AHU-3
AREA SERVED		MUSIC / GYM LOBBY	GYM	LOCKER ROOM
MANUFACTURER		TRANE	TRANE	TRANE
UNIT MODEL		CSAA014	CSAA030	CSAA008
CONFIGURATION (SEE BELOW)		HORIZONTAL VAV	HORIZONTAL VAV	HORIZONTAL VAV
ORIENTATION/HANDING		RIGHT	LEFT	LEFT
MAX SUPPLY AIR	CFM	6800	14000	3900
VENTILATION AIR	CFM	2400	8500	1200
CC ENTERING AIR CONDITIONS	°FDB/°FWB	78.3 / 66.5	79.8 / 68.6	74.8 / 65.2
CC LEAVING AIR CONDITIONS	°FDB/°FWB	54 / 54	52 / 52	53.8 / 53.4
UNIT TOTAL COOLING CAPACITY	MBH	260	720	132
UNIT LATENT COOLING CAPACITY	MBH	80	430	42
UNIT SENSIBLE COOLING CAPACITY	MBH	180	290	90
CHILLED WATER FLOW RATE	GPM	44	120	22
CHILLED WATER TEMP ENT/LEAV	°F / °F	44 / 56	44 / 56	44 / 56
CHILLED WATER COIL ROWS & FINS/INCH		8 / 6.8	8 / 10	6 / 12
CHILLED WATER COIL FACE VELOCITY	FPM	518	488	533
COOLING COIL FLUID PRESSURE DROP	FT WG	4.5	6	2.8
HEATING COIL CAPACITY	MBH	140	330	78
HC ENTERING AIR CONDITIONS	°F DB	60	56	56
HC LEAVING AIR CONDITIONS	°F DB	79	78	74.5
HOT WATER FLOW RATE	GPM	16	33	10
HOT WATER TEMP ENT/LEAV (MAX/MIN)	°F / °F	160 / 140	160 / 140	160 / 140
HOT WATER COIL ROWS & FINS PER INCH		1 / 6.7	1 / 6.7	1 / 6.7
HOT WATER COIL FLUID PRESSURE DROP	FT WG	0.7	2.3	0.2
MAX HEATING COIL FACE VELOCITY	FPM	544	488	533
DP ERV	IN WG	0.9	1.8	-
DP FILTER SECTION	IN WG	1.4	1.4	1.5
DP COOLING COIL STATIC	IN WG	0.7	1	0.75
DP HEATING COIL STATIC	IN WG	0.1	0.1	0.1
DP FAN SECTION	IN WG	0.5	0.1	0.3
EXTERNAL STATIC	IN WG	1.5	1.5	1.5
TOTAL STATIC PRESS. DROP (CLEAN/DIRTY)	IN WG	5	5.9	4.1
AHU FAN BRAKE HORSEPOWER (DIRTY)	BHP	9.5	29	4.7
AHU FAN MOTOR HORSEPOWER	HP	ECM 2 @ 8.05	ECM 4 @ 8.05	ECM 8.05
AHU ELECTRICAL CHARACTERISTICS	V/Ø/HZ	480/3/60	480/3/60	480/3/60
MOTOR F.L.A.	AMPS	2 @ 8.5	4 @ 8.4	8.75
BREAKER SIZE (MOCP)	AMPS	25	40	15
MAXIMUM CABINET DIMENSIONS (LxWxH)	IN	155 x 72 x 45	164 x 94 x 65	150 x 50 x 41
NOTES		1 - 16	1 - 16	1 - 14

NOTES:
1. OUTSIDE AIR FLOW RATE SHALL VARY BASED ON INDOOR CO2 CONCENTRATION (DCV)
2. NO CONTROLLER. CONTROLS BY OTHERS.
3. COOLING COIL SECTION SHALL HAVE STAINLESS STEEL IAQ DRAIN PAN.
4. INCLUDE STAINLESS STEEL COIL CASING AND COIL SUPPORTS.
5. FILTER SECTION TO ACCOMMODATE 2" THICK PRE-FILTERS (MERV 8) WITH 4" THICK FINAL FILTERS (MERV 11).
6. THE COOLING COIL SHALL NOT HAVE MORE THAN 8 ROWS.
7. G-60 GALVANIZED DOUBLE-WALL UNIT WITH 2" THICK FOAM FILLED INSULATION, MINIMUM R = 13.
8. MOTORS SHALL BE ECM
9. MINIMUM 6" HIGH BASE RAIL INTEGRAL TO UNIT. CONDENSATE CONNECTION SHALL BE HIGH ENOUGH TO ALLOW FOR P-TRAP AND NO STANDING WATER IN PAN.
10. ACCESS DOORS SHALL BE HINGED WITH ROTATING DOOR LOCK AND GASKETS, AND MANUFACTURED OF THE SAME CONSTRUCTION OF THE BASE.
11. MEAN FILTER PRESSURE DROP USED IN TSP AND BHP CALCULATIONS.
12. FC FAN, FACTORY BALANCED ACROSS OPERATING RPM, MOUNTED ON ISOLATION PLATFORM.
13. PROVIDE A 5-YEAR MANUFACTURER'S WARRANTY ON PARTS AND LABOR
14. FAN SHIPPING SECTIONS SHALL FIT THROUGH A 6'-0 x 7'-0 DOUBLE DOOR, OR INCLUDE INSTRUCTIONS TO KNOCK-DOWN SECTIONS.
15. ENTERING AIR TEMPERATURES ARE CALCULATED WITH ERV SYSTEM
16. FAN SECTIONS SHALL INCLUDE PERFORATED PANELS FOR NOISE ATTENUATION IN GYM AND MUSIC ROOMS.

DRAW -THRU CONFIGURATION:
1. MIXING BOX SECTION, TOP INLET WITH NO DAMPER, WITH FILTER FRAMES
2. COOLING COIL
3. HEATING COIL
4. FAN SECTION, TOP OUTLET
5. PROVIDE ACCESS DOORS ON ONE SIDE.

ENERGY RECOVERY VENTILATOR SCHEDULE

DESIGNATION			ERV-1	ERV-2
AREA/ROOM SERVED & BUILDING			AHU-1	AHU-2
SERVICE			ENERGY RECOVERY	ENERGY RECOVERY
MANUFACTURER			RENEWAIRE	RENEWAIRE
MODEL			CA-3XJIN	CA-4XJIN
QTY.			2	3
TYPE			STATIC PLATE	STATIC PLATE
SUPPLY AIR FLOWRATE		CFM	2400	8500
EXHAUST AIR FLOWRATE		CFM	1800	7500
SUMMER/COOLING	OUTDOOR AIR	°FDB/°FWB	96 / 76	96 / 76
	FRESH AIR	°FDB/°FWB	79.9 / 68.9	80.6 / 69.5
	RETURN AIR	°FDB/°FWB	73 / 63	73 / 63
	SENSIBLE EFFECTIVENESS	%	88.5%	76.3%
	TOTAL EFFECTIVENESS	%	77%	60.8%
	LOAD SAVINGS RATIO	%	58%	53.4%
	SENSIBLE ENERGY RECOVERY	MBTUH	39.6	142
	LATENT ENERGY RECOVERY	MBTUH	28	80.4
	TOTAL ENERGY RECOVERY	MBTUH	67.6	222.4
	MOISTURE REMOVED	GR / LB	15.8	12.7
WINTER/HEATING	OUTDOOR AIR	°FDB/°FWB	25.6 / 21.4	25.6 / 21.4
	FRESH AIR	°FDB/°FWB	54.9 / 42.4	55.3 / 42.2
	RETURN AIR	°FDB/°FWB	70 / 51.5	70 / 51.5
	SENSIBLE EFFECTIVENESS	%	88.5%	76.3%
	TOTAL EFFECTIVENESS	%	86.5%	72.8%
	LOAD SAVINGS RATIO	%	64.5%	63.8%
	SENSIBLE ENERGY RECOVERY	BTUH	76.4	274.2
	LATENT ENERGY RECOVERY	BTUH	16.9	52.7
	TOTAL ENERGY RECOVERY	BTUH	93.3	327
	MOISTURE ADDED	GR / LB	9.9	8.7
INTERNAL STATIC, O/A / E/A		IN WC	0.51 / 0.36	1.02 / 0.86
FILTER QTY / SIZE, EACH		IN	6 / 20x20x2	8 / 20x20x2
FILTER TYPE			MERV 11	MERV 11
UNIT DIMENSIONS, EACH		LXWXH	62" x 35" x 35"	82" x 35" x 35"
APPROX. UNIT WEIGHT, EACH		LBS	325	400

NOTES:
1. INDOOR UNITS
2. DOUBLE WALL INSULATED CABINET
2. MULTIPLE UNITS ARE TO BE STACKED, AND DUCT CONNECTIONS WILL BE PLENUM STYLE.
3. MAINTAIN ACCESS TO BOTH SIDES OF ERV FOR FILTER ACCESS.

VRF SYSTEM SCHEDULE

DESIGNATION		CU-102 & FCU-102	
TYPE OF UNIT		WALL MOUNT COOLING ONLY	
MANUFACTURER		MITSUBISHI	
FAN COIL UNIT MODEL		PKA-AL12NL	
CONDENSING UNIT MODEL		PUZ-AK12NL	
SUPPLY AIR (LOW, MED, HIGH)	CFM	265, 290, 385	
VENTILATION AIR	CFM	N/A	
FAN STATIC (EXTERNAL)	IN	N/A	
AHRI RATED COOLING CAPACITY	MBH	12.0	
SEER	BTUH/WATT	21.3	
RATED HEATING CAPACITY	MBH	N/A	
UNIT ELECTRICAL CHARACT.	V/Ø/HZ	208/230 / 1 / 60	
MINIMUM CIRCUIT AMPS	AMPS	16	
BREAKER SIZE	AMPS	20	
SUCTION/LIQUID LINE SIZE	IN	1/2" / 1/4"	
MAX PIPING LENGTH	FT	165	
FAN COIL DIMENSIONS (LXWXDP)	IN	36X12X10	
NOTES		1-3, 5-7	

NOTES:
1. VARIABLE INVERTER-DRIVEN COMPRESSOR, HIGH PRESSURE SWITCH, EXTERNAL SERVICES VALVES.
2. INDOOR UNIT POWERED BY OUTDOOR UNIT.
3. PROVIDE SIMPLE WIRED CONTROLLER
4. CASSETTE TO HAVE CAPACITY TO LIFT CONDENSATE TO 33"
5. INCLUDE MFR LINESET OF APPROPRIATE LENGTH.
6. PROVIDE REFCO GOBI II CONDENSATE PUMP W/ RESERVOIR & SENSOR TO OVERRIDE EQUIPMENT OPERATION ON HIGH CONDENSATE LEVEL.
7. INCLUDE CONDENSER WALL BRACKET OR MOUNTING PAD.

DIFFUSER & GRILLE SCHEDULE

TYPE	QTY	DESCRIPTION	MODEL	REMARKS	AIR PATTERN	DAMPER
A	14	ARCHITECTURAL SQUARE PLAQUE SUPPLY AIR GRILLE	TITUS OMNI-AA	LAY-IN TYPE, SQUARE PLAQUE, ALUMINUM, WITH FORMED EDGES, WHITE FINISH, 24x24 MODULE SIZE, WITH OPTIONAL FACTORY MOLDED INSULATION BLANKET. 10" ROUND NECK SIZE.	4-WAY	NO
B	13	ARCHITECTURAL SQUARE PLAQUE SUPPLY AIR GRILLE	TITUS OMNI-AA	LAY-IN TYPE, SQUARE PLAQUE, ALUMINUM, WITH FORMED EDGES, WHITE FINISH, 24x24 MODULE SIZE, WITH OPTIONAL FACTORY MOLDED INSULATION BLANKET. 8" ROUND NECK SIZE.	4-WAY	NO
C	7	ARCHITECTURAL SQUARE PLAQUE SUPPLY AIR GRILLE	TITUS OMNI-AA	LAY-IN TYPE, SQUARE PLAQUE, ALUMINUM, WITH FORMED EDGES, WHITE FINISH, 24x24 MODULE SIZE, WITH OPTIONAL FACTORY MOLDED INSULATION BLANKET. 6" ROUND NECK SIZE.	4-WAY	NO
D	4	ARCHITECTURAL SQUARE PLAQUE SUPPLY AIR GRILLE	TITUS OMNI-AA	SURFACE MOUNT, SQUARE PLAQUE, ALUMINUM, WITH FORMED EDGES, WHITE FINISH, 12X12 MODULE SIZE, WITH OPTIONAL FACTORY MOLDED INSULATION BLANKET. 6" ROUND NECK SIZE.	4-WAY	NO
E	3	LOUVERED SUPPLY AIR GRILLE	TITUS 301FS	SURFACE MOUNT TYPE-1, ALUMINUM CONSTRUCTION, 3/4" BLADE SPACING, ADJ. BLADES, SINGLE DEFLECTION, 32"x8" FINISH COLOR TO BE GENTIAN BLUE RAL5010.	NA	NO
F	1	LOUVERED SUPPLY AIR GRILLE	TITUS 301FS	SURFACE MOUNT TYPE-1, ALUMINUM CONSTRUCTION, 3/4" BLADE SPACING, ADJ. BLADES, SINGLE DEFLECTION, WHITE FINISH, 8x8, OPPOSED BLADE DAMPER	NA	YES
G	8	PERFORATED RETURN AIR GRILLE	TITUS PAR	LAY-IN TYPE, 3/16" Ø HOLES ON 1/4" CENTERS, ALUMINUM CONSTRUCTION, WHITE FINISH, 24x24 MODULE SIZE, 12" ROUND NECK SIZE	NA	NO
H	10	PERFORATED RETURN AIR GRILLE	TITUS PAR	LAY-IN TYPE, 3/16" Ø HOLES ON 1/4" CENTERS, ALUMINUM CONSTRUCTION, WHITE FINISH, 24x24 MODULE SIZE, 10" ROUND NECK SIZE	NA	NO
I	1	PERFORATED RETURN AIR GRILLE	TITUS PAR	LAY-IN TYPE, 3/16" Ø HOLES ON 1/4" CENTERS, ALUMINUM CONSTRUCTION, WHITE FINISH, 24x24 MODULE SIZE, 8" ROUND NECK SIZE	NA	NO
J	6	PERFORATED RETURN AIR GRILLE	TITUS PAR	LAY-IN TYPE, 3/16" Ø HOLES ON 1/4" CENTERS, ALUMINUM CONSTRUCTION, WHITE FINISH, 24x24 MODULE SIZE, 6" ROUND NECK SIZE	NA	NO
K	2	PERFORATED RETURN AIR GRILLE	TITUS PAR	SURFACE MOUNT, 3/16" Ø HOLES ON 1/4" CENTERS, ALUMINUM CONSTRUCTION, WHITE FINISH, 12X12 MODULE SIZE, 8" ROUND NECK SIZE	NA	NO
L	3	PERFORATED RETURN AIR GRILLE	TITUS PAR	SURFACE MOUNT, 3/16" Ø HOLES ON 1/4" CENTERS, ALUMINUM CONSTRUCTION, WHITE FINISH, 8X8 MODULE SIZE, 6" ROUND NECK SIZE	NA	NO
M	1	LOUVERED RETURN GRILLE	GREENHECK XG-RHE	SURFACE MOUNT TYPE-1, ALUMINUM CONSTRUCTION, 3/4" BLADE SPACING, 45° FIXED BLADE, SINGLE DEFLECTION, 32" x 16" FINISH COLOR TO BE GENTIAN BLUE RAL5010.	NA	NO
N	14	DRUM LOUVER FOR SPIRAL-WOUND, DOUBLE-WALL DUCT	GREENHECK XG-RL-SP	DRUM LOUVER FOR INSTALLATION INTO DOUBLE-WALL DUCT. ALUMINUM CONSTRUCTION, ADJUSTABLE DIRECTION VANES, AIR SCOOP, COLOR TO BE WHITE, 30" x 12"	2-WAY	NO
O	2	LOUVERED RETURN AIR GRILLE	GREENHECK XG-RHE	SURFACE MOUNT TYPE-1, ALUMINUM CONSTRUCTION, 3/4" BLADE SPACING, 45° FIXED BLADE, SINGLE DEFLECTION, 64" x 40". FOR USE IN A GYM. FINISH COLOR TO BE AGATE GREY RAL 7038.	NA	NO
P	1	HIGH PRESS SUPPLY NOZZLE	UNICO SYSTEMS	WHITE, 2" ROUND NOZZLE WITH SOUND ATTENUATING HOSE.	NA	NO
Q	2	ARCHITECTURAL SQUARE PLAQUE SUPPLY AIR GRILLE	TITUS OMNI-AA	SURFACE MOUNT, SQUARE PLAQUE, ALUMINUM, WITH FORMED EDGES, WHITE FINISH, 24x24 MODULE SIZE, WITH OPTIONAL FACTORY MOLDED INSULATION BLANKET. 8" ROUND NECK SIZE.	4-WAY	NO
R	2	ARCHITECTURAL SQUARE PLAQUE SUPPLY AIR GRILLE	TITUS OMNI-AA	SURFACE MOUNT, SQUARE PLAQUE, ALUMINUM, WITH FORMED EDGES, WHITE FINISH, 24x24 MODULE SIZE, WITH OPTIONAL FACTORY MOLDED INSULATION BLANKET. 6" ROUND NECK SIZE.	4-WAY	NO
S	2	PERFORATED RETURN AIR GRILLE	TITUS PAR	SURFACE MOUNT, 3/16" Ø HOLES ON 1/4" CENTERS, ALUMINUM CONSTRUCTION, WHITE FINISH, 24x24 MODULE SIZE, 12" ROUND NECK SIZE	NA	NO
T	2	PERFORATED RETURN AIR GRILLE	TITUS PAR	SURFACE MOUNT, 3/16" Ø HOLES ON 1/4" CENTERS, ALUMINUM CONSTRUCTION, WHITE FINISH, 24x24 MODULE SIZE, 6" ROUND NECK SIZE	NA	NO

1

1

NOTES:
1. SUPPLY FLOW RATES SHALL BE ADJUSTABLE AT THE TAKE OFF UOS.
2. COORDINATE FINISHES WITH ARCHITECT. DUCT MOUNT GRILLES IN EXPOSED DUCTWORK TO BE FIELD-PAINTED.

LAY-IN SUPPLY AIR GRILLE NECK SIZES

AIR FLOW RANGE (CFM)	NECK SIZE SIZE (IN)
25-120	6"Ø
125-225	8"Ø
230-350	10"Ø
351-500	12"Ø

NOTES:
1. EQUIVALENT SQUARE/RECT SIZES ARE ACCEPTABLE.

LAY-IN RETURN/EXHAUST/TRANSFER AIR GRILLE CONNECTION SIZES (UOS)

AIR FLOW RANGE (CFM)	NECK/DUCT CONNECTION SIZE (UOS) (IN)
0-100	6"Ø
101-175	8"Ø
176-300	10"Ø
301-450	12"Ø
451-750	14"Ø

LOUVER SCHEDULE

DESIGNATION		L-1	L-2
SERVICE		MECH ROOM 109	MEZZANINE 200
NOMINAL SIZE (WXH)	IN	76" x 24"	72" x 40"
FREE AREA (DESIGN MINIMUM)	%	42%	45%
FREE AREA	SQ FT	5.4 SF	9.1 SF
DEPTH	IN	6	6
TYPE		EXTERIOR	EXTERIOR
MATERIAL/CONSTRUCTION		ALUMINUM	ALUMINUM
BASIS OF DESIGN MANUFACTURER		GREENHECK	GREENHECK
BASIS OF DESIGN MODEL		EHH-601	EHH-601
QUANTITY		1	1
NOTES		1 THRU 8	1 THRU 6, 9

NOTES:
1. CONSTRUCTED OF EXTRUDED ALUMINUM. BLADES POSITIONED HORIZONTALLY.
2. EXPANDED, FLATTENED ALUMINUM BIRD SCREEN.
3. MIAMI-DADE CERTIFIED.
4. WIND DRIVEN RAIN RESISTANT
5. FINISH COLOR TO BE BRIGHT SILVER AL222, VERIFY WITH OWNER
6. INCLUDE INSECT SCREEN
7. PROVIDE INSULATED BLANK PANEL
8. TO BE INSTALLED IN A DOOR FRAME
9. TO BE INSTALLED IN A CMU WALL

FAN SCHEDULE

DESIGNATION		EF-1	EF-2	EF-3	EF-4	EF-5	EF-6	EF-7
AREA/ROOM SERVED & BUILDING		MUSIC / GYM LOBBY	GYM	LOBBY	LOCKER ROOM	LOCKER ROOM	RESTROOMS	FLAMM. STG
SERVICE		ERV EXHAUST	ERV EXHAUST	TOILET EXHAUST	FEMALE	MALE	TOILET / SHOWER EXHAUST	BUILDING EXHAUST
MANUFACTURER		GREENHECK	GREENHECK	GREENHECK	GREENHECK	GREENHECK	GREENHECK	GREENHECK
MODEL		CUE-140-VG	CUBE-300-VG	G-95-VG	G-90-VG	G-90-VG	SP-A70-VG	CUBE-099-4
TYPE		UPBLAST	SIDEWALL	DOWNBLAST	DOWNBLAST	DOWNBLAST	CEILING	SIDEWALL
FAN CONSTRUCTION		ALUMINUM	ALUMINUM	ALUMINUM	ALUMINUM	ALUMINUM	PP & GALV.	ALUMINUM
DRIVE TYPE		DIRECT	BELT	DIRECT	DIRECT	DIRECT	DIRECT	BELT
AIR FLOWRATE DESIGN	CFM	1800	7500	700	530	530	70	250
DESIGN STATIC PRESSURE	IN	1.0	1.25	0.5	0.5	0.5	0.4	0.28
DESIGN FAN SPEED	RPM	1440	725	1624	1628	1628	808	840
RADIATED SOUND POWER	SONES	11.4	17.0	9.6	8.0	8.0	2.0	4.3
ELECTRICAL CHARACTERISTICS	V/Ø/HZ	208 / 1 / 60	460 / 3 / 60	208 / 1 / 60	208 / 1 / 60	208 / 1 / 60	115/1/60	115/1/60
MOTOR HORSEPOWER	HP	3/4	3	1/6	1/6	1/6	23 W	1/4
MIN CIRCUIT AMPACITY	AMPS	7.5	6.2	1.9	1.9	1.9		7.25
OPTIONS		3, 5, 6, 7, 8	3, 5, 8, 9	3, 4, 5, 6, 7	3, 4, 5, 6, 7	3, 4, 5, 6, 7	1,2,3,4	3, 5, 6, 9, 10
CONTROL NOTES		3	3	1	1	1	2	4
PROJECT QTY.		1	1	1	1	1	4	1

OPTIONS:
1. ALUMINUM GRILLE.
2. PREWIRED MOTOR DISCONNECT SWITCH, NEMA-1.
3. BACKDRAFT DAMPER
4. VARI-GREEN MOTOR
5. PREWIRED MOTOR DISCONNECT SWITCH, NEMA-3R.
6. FAN & CURB ARE TO BE RATED FOR HIGH WIND APPLICATION
7. PROVIDE ROOF CURB TO MATCH ROOF PITCH, CURB SHALL EXTEND MIN. 8" ABOVE ROOFING.
8. VARI-GREEN MOTOR AND INPUT FOR 0-10V SIGNAL
9. WALL BRACKET FOR SIDE-WALL MOUNTING.
10. FOR USE IN FLAMMABLE STORAGE APPLICATION, CLASS I, DIV 1, GROUP D. FAN TO BE SPARK RESISTANT AND MOTOR TO BE EXPLOSION-PROOF.

CONTROL NOTES:
1. FAN WILL OPERATE DURING OCCUPIED HOURS VIA BAS.
2. FAN WILL OPERATE BASED ON OCCUPANCY SENSOR.
3. FAN WILL BE VARIABLE SPEED TO PROVIDE CONSTANT BUILDING PRESSURE THROUGH BAS.
4. FAN WILL OPERATE VIA WALL SWITCH.

GRAVITY VENTILATOR SCHEDULE

DESIGNATION		GV-1	
SERVICE		EXHAUST	
NOMINAL SIZE (WXH)	IN	8	
FREE AREA (DESIGN MINIMUM)	SQ FT	0.37	
AIR FLOW RATE	CFM	70-300	
MAXIMUM PRESSURE DROP	IN	0.2	
THROAT VELOCITY	FPM	VARIES	
MATERIAL/CONSTRUCTION		ALUMINUM	
CURB CAP	IN	19x19	
ROOF CURB		YES	
CURB HEIGHT	IN	12", F.V.	
ROOF OPENING	IN	10.5 x 10.5	
BASIS OF DESIGN MANUFACTURER		GREENHECK	
BASIS OF DESIGN MODEL		GRSR	
PROJECT QTY.		4	

NOTES:
1. HEAVY-GAUGE ALUMINUM CONSTRUCTION, STANDARD FINISH
2. PROVIDE ROOF CURB TO MATCH ROOF PITCH, CURB SHALL EXTEND MIN. 8" ABOVE ROOFING.
3. CURB CAP TO BE PRE-PUNCHED FOR MOUNTING TO CURB
4. BIRD SCREEN, 1/2" GALV. MESH
5. VENTILATOR & CURB ARE TO BE RATED FOR HIGH WIND APPLICATION

This item has been digitally signed and sealed by **Jon Barber, PE** on 6/3/25
Printed copies of this document are not considered signed and sealed and the signature must be verified on any electronic copies.

PHASE:	DRAWN:	REVIEWED:	DATE:	ID:	REVISION:	DRAWN:	REVIEWED:	DATE:
CONCEPT SCHEM. DESIGN				1	Addendum #1	JB	JB	6/3/2025
DESIGN DEVELOPMENT	MH	JB	12/20/2024					
EARLY DEMOLITION PACKAGE								
80% CONSTRUCTION DOCS.	MH	JB	03/21/2025					
PERMIT DOCS.								
100% CONSTRUCTION DOCS.	MH	JB	05/09/2025					

THESE DRAWINGS AND RENDERINGS ARE INSTRUMENTS OF SERVICE. THE DRAWINGS AND ASSOCIATED COPIES THEREOF , INCLUDING ELECTRONIC MEDIA AND CADD FILES, ARE THE PROPERTY OF ARCHITECTS: LEWIS + WHITLOCK, P.A. THEIR USE, REPRESENTATION OR REPRODUCTION FOR ANY PURPOSE EXCEPT BY WRITTEN AGREEMENT WITH THE ARCHITECT IS PROHIBITED. THIS COPYRIGHT NOTIFICATION SHALL BE TRUE AS IF DIRECTLY PLACED ON EACH DRAWING EXHIBIT OR RENDERING ON THIS DOCUMENT AND SHALL NOT BE REMOVED FROM THESE DOCUMENTS

Client:
Leon County Schools
3420 W. Tharpe St., Suite 100
Tallahassee, FL 32303

Job Title:
Griffin Middle School - Phase 2
800 Alabama St. Tallahassee, FL 32304

Consultant:
McGINNISS + FLEMING ENGINEERING
JON BARBER, PE 55427 | BRIAN WALLACE, PE 75562
820 EAST PARK AVE. I-200, TALLAHASSEE, FL 32301
MFE-INC.COM | 850.681.6424

Seal:
JON M. BARBER LICENSE No. 55427 STATE OF FLORIDA PROFESSIONAL ENGINEER

Project #: 23483
Phase: 100% Construction Documents

ALW
Architects Lewis + Whitlock
206 West Virginia St.
Tallahassee, Florida 32301
850,942.1718
www.think3d.net

Description:
Mechanical Schedules

Sheet No.:
M1.2

PLUMBING FIXTURE SCHEDULE (BASIS OF DESIGN)

TYPE	DESCRIPTION		TRIM & ACCESSORIES	FIXTURE CONNECTIONS			
				CW	HW	WASTE	VENT
WC-1	ADA WATER CLOSET, FLOOR MOUNT, VITREOUS CHINA, 16⅝" RIM HGT. ELONGATED BOWL, FLUSHOMETER VALVE SIPHON, 1-1/2" TOP SPUD, 1.6 GALLON FLUSH.	KOHLER HIGHCLIFF ULTRA K-96057	SLOAN REGAL 111 XL EXPOSED FLUSH VALVE, DIAPHRAGM-TYPE, 1.6 GALLON FLUSH, CHROME PLATED. BEMIS 1955SSCT ELONGATED SOLID PLASTIC SELF-SUSTAINING OPEN FRONT SEAT WITH CHECK HINGE AND BOLT CAPS. ESCUTCHEON PLATE W/ SET SCREW.	1"		3"	2"
L-1	21¼"x18⅛" WALL-HUNG VITREOUS CHINA LAVATORY. SINGLE HOLE INSTALLATION, ADA COMPLIANT.	KOHLER K-2007-0	MOEN 8884 SINGLE-HANDLED ADA METERING LAVATORY FAUCET. CHROME PLATED SOLID BRASS CONSTRUCTION, SINGLE HOLE MOUNT, VANDAL RESISTANT. 0.5GPM MAXIMUM MULTI-STREAM LAMINAR FLOW LIMITS WATER DISCHARGE TO A MAXIMUM OF 0.25GPC @ 30 SECONDS OR 0.20GPC @ 24 SECONDS, GRID DRAIN. WITHOUT POP-UP ASSEMBLY. MCGUIRE 1-1/4" TRAP W/ PRODRAIN OFFSET ASSEMBLY, PRE-WRAPPED CHROME PLATED HEAVY CAST BRASS ADJUSTABLE P-TRAP W/ CLEANOUT, TAILPIECE, SLIP NUTS, 17A. SEAMLESS TUBULAR BRASS WALL BEND. MCGUIRE 167LK ANGLE SUPPLY STOPS, FLEXIBLE CHROME PLATED RISERS, CHROME ESCUTCHEON PLATES W/ SET SCREWS. PROVIDE WITH TMV ZURN ZW1070XL, OR EQUAL	1/2"	1/2"	2"	1 1/2"
L-2	21¼"x18⅛" WALL-HUNG VITREOUS CHINA LAVATORY. SINGLE HOLE INSTALLATION, ADA COMPLIANT.	KOHLER K-2007-0	MOEN 8884 SINGLE-HANDLED ADA METERING LAVATORY FAUCET. CHROME PLATED SOLID BRASS CONSTRUCTION, SINGLE HOLE MOUNT, VANDAL RESISTANT. 0.5GPM MAXIMUM MULTI-STREAM LAMINAR FLOW LIMITS WATER DISCHARGE TO A MAXIMUM OF 0.25GPC @ 30 SECONDS OR 0.20GPC @ 24 SECONDS, GRID DRAIN. WITHOUT POP-UP ASSEMBLY. MCGUIRE 1-1/4" TRAP W/ PRODRAIN OFFSET ASSEMBLY, PRE-WRAPPED CHROME PLATED HEAVY CAST BRASS ADJUSTABLE P-TRAP W/ CLEANOUT, TAILPIECE, SLIP NUTS, 17A. SEAMLESS TUBULAR BRASS WALL BEND. MCGUIRE 167LK ANGLE SUPPLY STOPS, FLEXIBLE CHROME PLATED RISERS, CHROME ESCUTCHEON PLATES W/ SET SCREWS.	1/2"		2"	1 1/2"
U-1	URINAL - WALL MOUNT, WHITE VITREOUS CHINA, ¾" TOP SPUD, 1.0 GALLON FLUSH, 14" EXTENDED RIM. SEE ARCHITECTURAL PLANS FOR MOUNTING HEIGHTS.	KOHLER BARDON K-4991-ETSS	SLOAN REGAL 186 XL EXPOSED FLUSH VALVE, DIAPHRAGM-TYPE, 0.5 GALLON FLUSH, CHROME PLATED.	3/4"		2"	2"
U-2	URINAL - WALL MOUNT, WHITE VITREOUS CHINA, ¾" TOP SPUD, 1.0 GALLON FLUSH, 14" EXTENDED RIM. SEE ARCHITECTURAL PLANS FOR MOUNTING HEIGHTS. ADA COMPLIANT.	KOHLER BARDON K-4991-ETSS	SLOAN REGAL 186 XL EXPOSED FLUSH VALVE, DIAPHRAGM-TYPE, 0.5 GALLON FLUSH, CHROME PLATED.	3/4"		2"	2"
SH-1	PREFABRICATED STAINLESS STEEL SHOWER UNIT	ZURN Z7500-i2	SH-1: TEMP-GUARD PRESSURE BALANCING SHOWER VALVE WITH SINGLE BRONZE STEM, STAINLESS STEEL BALANCING PISTON & BOTTOM ACCESS INTEGRAL SERVICE STOPS. STANDARD WITH 1/2" COPPER TUBING ASSEMBLY ENCLOSED BY 18 GAGE STAINLESS STEEL #4 BRUSHED FINISH SHROUD, CHROME PLATED BRASS SHOWER HEAD WITH FLOW CONTROL ON INSTITUTIONAL BRACKET, METAL STEM HANDLE, SIDE MOUNT SOAP DISH & ALL VANDAL PROOF SECURING SCREWS.	1/2"	1/2"	2"	2"
SH-2	PREFABRICATED STAINLESS STEEL SHOWER UNIT. ADA COMPLIANT.	ZURN Z7500-HW	SH-2: TEMP-GUARD PRESSURE BALANCING SHOWER VALVE WITH SINGLE BRONZE STEM, STAINLESS STEEL BALANCING PISTON, & BOTTOM ACCESS INTEGRAL SERVICE STOPS. UNIT INCLUDES: HANDWALL SHOWER UNIT COMPLETE WITH 24" MOUNTING BAR, 60" METAL HOSE AND STANDARD HANDSET. STANDARD WITH 1/2" COPPER TUBING ASSEMBLY ENCLOSED BY 18 GAGE STAINLESS STEEL #4 BRUSHED FINISH SHROUD, METAL STEM HANDLE, SIDE MOUNT SOAP DISH, & ALL VANDAL PROOF SECURING SCREWS.	1/2"	1/2"	2"	2"
SK-1	SINGLE BOWL UNDERMOUNT SINK, 18 GA. TYPE 304 STAINLESS STEEL SINK. 23½"x18¼"x7½" DEEP.	JUST US1824A-J	CHICAGO FAUCETS 1100-GN8AE3-317AB. DECK MOUNT SWING SPOUT GOOSENECK FAUCET, 4" WRISTBLADE HANDLES, 8" CENTERS, 13-1/2" SPOUT HEIGHT, 8" SPOUT REACH. CHRONOMITE OMNI A-200 SERIES 1.5 GPM LANINAR FLOW CONTROL. McGUIRE CHROME PLATED HEAVY CAST BRASS TAILPIECE, SLIP NUTS, 17 GA. SEAMLESS TUBULAR BRASS WALL BEND. ESCUTCHEON PLATE. McGUIRE 2165 1/2" ANGLE SUPPLIES WITH STOPS. FLEXIBLE CHROME PLATED COPPER RISERS.	1/2"	1/2"	2"	1 1/2"
SK-2	SINGLE BOWL UNDERMOUNT SINK, 18 GA. TYPE 304 STAINLESS STEEL SINK. 21½"x18½"x7½" DEEP.	JUST US1821A-J	CHICAGO FAUCETS 1100-GN8AE3-317AB. DECK MOUNT SWING SPOUT GOOSENECK FAUCET, 4" WRISTBLADE HANDLES, 8" CENTERS, 13-1/2" SPOUT HEIGHT, 8" SPOUT REACH. CHRONOMITE OMNI A-200 SERIES 1.5 GPM LANINAR FLOW CONTROL. McGUIRE CHROME PLATED HEAVY CAST BRASS TAILPIECE, SLIP NUTS, 17 GA. SEAMLESS TUBULAR BRASS WALL BEND. ESCUTCHEON PLATE. McGUIRE 2165 1/2" ANGLE SUPPLIES WITH STOPS. FLEXIBLE CHROME PLATED COPPER RISERS.	1/2"	1/2"	2"	1 1/2"
SK-3	SINGLE BOWL WALL HUNG HANDWASH SINK KIT W/FAUCET, DRAIN, AND P-TRAP. TYPE 304 STAINLESS STEEL. 16¾"x15½"x6" DEEP.	ELKAY CHS1716C	ELKAY LK940GN04L2H 8" CENTERSET WALL MOUNT FAUCET, 2" LEVER HANDLES. CHRONOMITE OMNI A-200 SERIES 1.0 GPM LANINAR FLOW CONTROL. MCGUIRE CHROME PLATED HEAVY CAST BRASS TAILPIECE, SLIP NUTS, 17 GA. SEAMLESS TUBULAR BRASS WALL BEND. ESCUTCHEON PLATE. MCGUIRE 2165 1/2" ANGLE SUPPLIES WITH STOPS. FLEXIBLE CHROME PLATED COPPER RISERS. PROVIDE TRUEBRO LAV GUARD 2 UNDERSINK PROTECTION.	1/2"	1/2"	2"	1 1/2"
MS-1	32"x32"x12" PRECAST TERRAZZO MOP SERVICE BASIN	FIAT TSBC1611	T&S BRASS B-0665-BSTR FAUCET W/ VACUUM BREAKER FIAT 832-AA HOSE AND HOSE BRACKET FIAT 1239BB ALUMINUM BUMPERGUARD WITH VINYL INSERT FIAT 889-CC MOP HANGER FIAT 833-AA SILICONE SEALANT FIAT MSG3232 STAINLESS STEEL WALL GUARDS	1/2"	1/2"	3"	2"
US-1	1-COMPARTMENT SINK. 16 GAUGE 300 SERIES STAINLESS STEEL. CENTER DRAIN. 29"x$29\frac{13}{16}$"x43¾".	ELKAY 14-1C24X24-0X	T&S B-2414 WALL MOUNT FAUCET. 8" HIGH ARC SPOUT REACH, LEVER HANDLES. 8" FAUCET HOLE SPREAD. 9.7 GPM.	1/2"	1/2"	3"	2"
EWC-1	BOTTLE FILLING STATION AND BI-LEVEL ADA COOLER, FILTERED REFRIGERATED LIGHT GRAY GRANITE. CHILLING CAPACITY OF 8.0 GPH (GALLONS PER HOUR) OF 50° F DRINKING WATER, BASED ON 80° F INLET WATER AND 90° F AMBIENT, PER ASHRAE 18 TESTING. BOTTLE FILLER TO BE ON THE RIGHT SIDE.	ELKAY LMABFTL8WSLK	ANTIMICROBIAL, ENERGY SAVINGS, FILTERED, HANDS FREE, LAMINAR FLOW, REAL DRAIN, VISUAL FILTER MONITOR. FURNISHED WITH SAFETY BUBBLER. ELECTRONIC BOTTLE FILLER SENSOR WITH ELECTRONIC FRONT AND SIDE BUBBLER PUSHBAR ACTIVATION. PROVIDE BI-LEVEL PLATE-TYPE WATER COOLER SYSTEM, ZURN Z1225 . UNIT SHALL BE LEAD-FREE DESIGN WHICH IS CERTIFIED TO NSF/ANSI 61 & 372 (LEAD FREE) AND MEETS FEDERAL AND STATE LOW-LEAD REQUIREMENTS. PROVIDE W/ ELKAY CANE APRON LKAPREZL, AND ELKAY 51300C REPLACEMENT FILTERS (BOTTLE FILLERS).	1/2"		2"	1 1/2"
HB-1	WALL FAUCET, POLISHED CHROME	T&S BRASS B-0737-POL	3/4" NPT FEMALE INLET, ¾" GARDEN HOSE MALE OUTLET, LOOSE TEE KEY, VACUUM BREAKER	3/4"			
IMB-1	RECESSED ICE MAKER HOOK-UP BOX	GUY GRAY BIM 875	10" x 8¾" x3½" HOOK-UP BOX. 20 GA. BOX, 18 GA. FACEPLATE. ½" FIP INLET x ¼" OD OUTLET COMPRESSION ANGLE VALVE.	1/2"			
WMB-1	HOT-DIPPED GALVANIZED STEEL WASHING MACHING OUTLET BOX	GUY GRAY B200	11⅝"x9½"x3½" HOOK-UP BOX. 20 GA. BOX. ½" MIP/SWEAT CONX. VALVE, 2" THREADED DRAIN FITTING	1/2"	1/2"	2"	1 1/2"
IM-1	ICE MACHINE/ICE STORAGE BIN	HOSHIZAKI KM-350MAJ/B-300SF	ICE PRODUCTION: 489 LBS PER 24 HOURS. SINGLE PHASE, 115V/60/1, 3 WIRE, INCLUDING GROUND. MUST BE HARDWIRED AT SITE, NO CORD/PLUG INCLUDED. AMPERAGE: 9.05, MAX FUSE/HACR BREAKER: 15 A	1/2"		(2) 3/4" INDIRECT WASTE	
IMF-1	ICE MACHINE WATER FILTER	HOSHIZAKI H9320-51	RATED NSF CLASS 1, STD 42, FOR TASTE, ODOR AND CHLORINE REDUCTION AND FOR MECHANICAL FILTRATION (95.6% REMOVAL OF PARTICLES ONE (1) MICRON AND LARGER IN SIZE.)	(2) 3/8"			

1

PLUMBING FIXTURE SCHEDULE (BASIS OF DESIGN)

TYPE	DESCRIPTION		TRIM & ACCESSORIES	FIXTURE CONNECTIONS			
				CW	HW	WASTE	VENT
PRV-1	WATER PRESSURE REDUCING VALVE WITH STRAINER	ZURN 50XL3	LEAD-FREE BRASS BODY CONSTRUCTION. LEAD FREE STRAINER. LEAD-FREE STRAINER. ASSE 1003, CSA B356 CERTIFIED. REDUCED PRESSURE SETTING: 75 PSI	2 1/2"			
TMV-1	THERMOSTATIC WATER CONTROLLER. 110° SET TEMP.	LAWLER 66-50	INTEGRAL TEMPERED WATER SHUT-OFF VALVE. BRONZE BODY, STAINLESS STEEL PISTON. LEAD FREE CERTIFIED. CERTIFIED TO CSA B125.3. CONFORMS TO ASSE 1017. 1" OUTLET.	3/4"	3/4" IN 3/4" OUT		
TMV-2	THERMOSTATIC WATER CONTROLLER. 110° SET TEMP.	LAWLER 66-80	INTEGRAL TEMPERED WATER SHUT-OFF VALVE. BRONZE BODY, STAINLESS STEEL PISTON. LEAD FREE CERTIFIED. CERTIFIED TO CSA B125.3. CONFORMS TO ASSE 1017.	1"	1" IN 1 1/4" OUT		
TP-1	PRESSURE DROP ACTIVATED TRAP PRIMER	PPP PR-500	PROVIDE DISTRIBUTION UNIT DU-U AS REQUIRED. LOCATE TRAP PRIMER VALVE ABOVE CEILING.	1/2"			
FCO	ADJUSTABLE FLOOR CLEANOUT, DURA-COATED CAST IRON BODY WITH GAS AND WATERTIGHT ABS TAPERED THREAD PLUG AND ROUND SCORIATED CAST IRON EXTRA-HEAVY-DUTY SECURED POLISHED BRONZE TOP ADJUSTABLE TO FINISHED FLOOR.	ZURN Z1400	FLASHING CLAMP AND FLASHING FLANGE, BRONZE PLUG.	SEE PLANS FOR SIZES			
WCO	CLEANOUT TEE, DURA-COATED CAST IRON BODY, GAS AND WATERTIGHT ABS TAPERED THREAD PLUG, AND ROUND, SMOOTH STAINLESS STEEL WALL ACCESS COVER WITH SECURING SCREW.	ZURN Z1446	POLISHED BRONZE COVER. BRONZE PLUG.	SEE PLANS FOR SIZES			
ECO	ADJUSTABLE FLOOR CLEANOUT, DURA-COATED CAST IRON BODY WITH GAS AND WATERTIGHT ABS TAPERED THREAD PLUG AND ROUND SCORIATED CAST IRON EXTRA-HEAVY-DUTY SECURED POLISHED BRONZE TOP ADJUSTABLE TO FINISHED FLOOR.	ZURN Z1400	FLASHING CLAMP AND FLASHING FLANGE, BRONZE PLUG.	SEE PLANS FOR SIZES			
WHA	WATER HAMMER ARRESTOR	ZURN 1260XL	SIZING PER MANUFACTURERS INSTRUCTIONS.	REFERENCE WATER HAMMER ARRESTOR SCHEDULE			
BFP-1	DUAL CHECK BACKFLOW PREVENTER	ZURN 740	ASSE 1022,NSF/ANSI 372 APPROVED DUAL CHECK WITH ATMOSPHERIC VENT AND STAINLESS STEEL STRAINER.	1/2"			

DRAIN SCHEDULE (BASIS OF DESIGN)

TYPE	DESCRIPTION	MODEL	TRIM & ACCESSORIES	FIXTURE CONNECTIONS		
				CW	WASTE	VENT
FD-1	CAST IRON GENERAL SERVICE FLOOR DRAIN WITH SQUARE TOP AND AUXILIARY TRAP PRIMER FITTING.	ZURN Z415S	DUCO COATED CAST IRON BODY W/ FLASHING COLLAR AND ADJUSTABLE 7"x7" SQUARE POLISHED BRONZE STRAINER HEAD, TRAP PRIMER FITTING ½" NPT TAPPING.	1/2"	3"	2"
FD-2	CAST IRON GENERAL SERVICE FLOOR DRAIN WITH ROUND TOP.	ZURN Z415B	DUCO COATED CAST IRON BODY W/ FLASHING COLLAR AND ADJUSTABLE 8" ROUND NICKEL BRONZE STRAINER, SEDIMENT BUCKET. PROVIDE J.R. SMITH 2692 TRAP SEAL IN LIEU OF TRAP PRIMER CONNECTION.		3"	2"
HD-1	CAST IRON FIXED AIR GAP FITTING.	ZURN Z1024	DUCO CAST IRON WITH SET SCREW AND DEEP SEAL P-TRAP.		2"	
HD-2	BELLMOUTH HUB DRAIN		PVC REDUCER, 3"x2" W/ P-TRAP. PROVIDE J.R. SMITH 2692 TRAP SEAL IN LIEU OF TRAP PRIMER CONNECTION.		2"	2"
CD-1	CAST IRON CONDENSATE RECEPTOR	ZURN Z415I	DURA COATED CAST IRON BODY W/ FLASHING COLLAR AND ADJUSTABLE 7" ROUND NICKEL BRONZE STRAINER, WITH RAISED FLANGE. PROVIDE J.R. SMITH 2692 TRAP SEAL IN LIEU OF TRAP PRIMER CONNECTION.	0"	3"	2"
SD-1	STAINLESS STEEL LINEAR SHOWER DRAIN	ZURN ZS880	TYPE 304 STAINLESS STEEL LINEAR SHOWER DRAIN. 2" NO-HUB CENTER OUTLET, SECURED, LIGHT-DUTY, SLOTTED HEEL-PROOF GRATE. 12" LONG DRAIN, 14" LONG FRAME.		2"	2"
SD-2	STAINLESS STEEL LINEAR SHOWER DRAIN	ZURN ZS880	TYPE 304 STAINLESS STEEL LINEAR SHOWER DRAIN. 2" NO-HUB CENTER OUTLET, SECURED, LIGHT-DUTY, SLOTTED HEEL-PROOF GRATE. 28" LONG DRAIN, 30" LONG FRAME.		2"	2"
RD-1 OD-1	COMBINATION MAIN ROOF AND OVERFLOW DRAIN	ZURN Z163	15" DIAMETER ROOF DRAIN AND OVERFLOW DRAIN, DURA-COATED CAST IRON BODIES WITH COMBINATION MEMBRANE FLASHING CLAMP/GRAVEL GUARDS, DOUBLE TOP-SET DECK PLATE, AND LOW SILHOUETTE POLY-DOMES.	SEE PLANS FOR SIZES		

This item has been digitally signed and sealed by **Jon Barber, PE** on 6/3/25
Printed copies of this document are not considered signed and sealed and the signature must be verified on any electronic copies.

JON M. BARBER
LICENSE
No. 55427
STATE OF
FLORIDA
PROFESSIONAL ENGINEER

PHASE:	DRAWN:	REVIEWED:	DATE:
CONCEPT SCHEM. DESIGN			
DESIGN DEVELOPMENT	TEP	JB	12/20/2024
EARLY DEMOLITION PACKAGE			
80% CONSTRUCTION DOCS.	TEP	JB	03/21/2025
PERMIT DOCS.			
100% CONSTRUCTION DOCS.	TEP	JB	05/09/2025

ID:	REVISION:	DRAWN:	REVIEWED:	DATE:
1	Addendum #1	TEP	JB	6/3/2025

THESE DRAWINGS AND RENDERINGS ARE INSTRUMENTS OF SERVICE. THE DRAWINGS AND ASSOCIATED COPIES THEREOF , INCLUDING ELECTRONIC MEDIA AND CADD FILES, ARE THE PROPERTY OF ARCHITECTS: LEWIS + WHITLOCK, PA.A. THEIR USE, REPRESENTATION OR REPRODUCTION FOR ANY PURPOSE EXCEPT BY WRITTEN AGREEMENT WITH THE ARCHITECT IS PROHIBITED. THIS COPYRIGHT NOTIFICATION SHALL BE TRUE AS IF DIRECTLY PLACED ON EACH DRAWING EXHIBIT OR RENDERING ON THIS DOCUMENT AND SHALL NOT BE REMOVED FROM THESE DOCUMENTS

Client:
Leon County Schools
3420 W. Tharpe St., Suite 100
Tallahassee, FL 32303

Job Title:
Griffin Middle School - Phase 2
800 Alabama St. Tallahassee, FL 32304

Consultant:
McGINNISS + FLEMING ENGINEERING
JON BARBER, PE 55427 | BRIAN WALLACE, PE 75562
820 EAST PARK AVE, I-200, TALLAHASSEE, FL 32301
MFE-INC.COM | 850.681.6424

Seal:

Project #: **23483**
Phase: **100% Construction Documents**

ALW
Architects Lewis + Whitlock
206 West Virginia St.
Tallahassee, Florida 32301
850.942.1718
www.think3d.net

Description:
Plumbing Schedules

Sheet No.:
P1.1

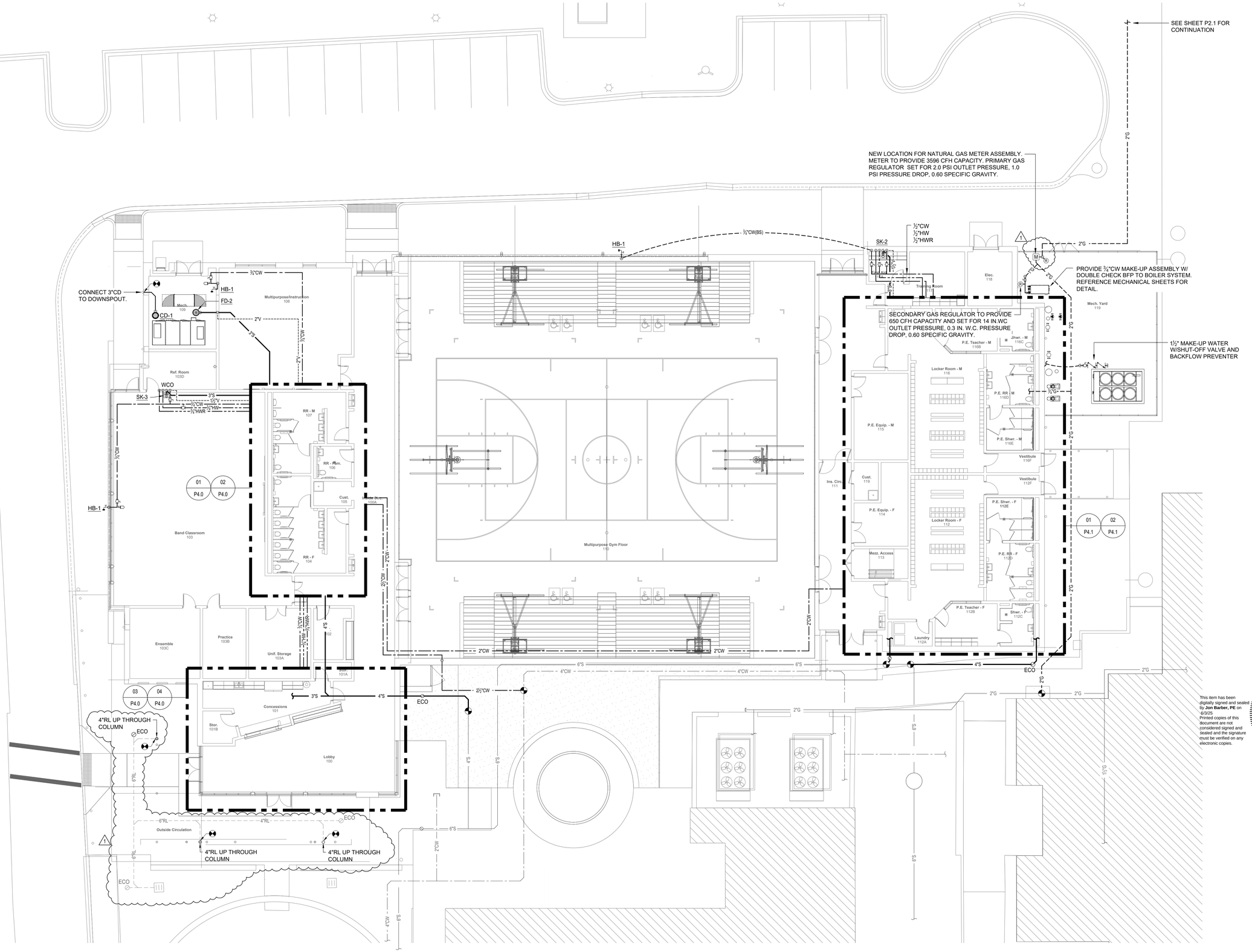

z 1 Gym Plumbing Plan
3/32" = 1'-0"

PHASE:	DRAWN:	REVIEWED:	DATE:
CONCEPT SCHEM. DESIGN			
DESIGN DEVELOPMENT	TEP	JB	12/20/2024
EARLY DEMOLITION PACKAGE			
80% CONSTRUCTION DOCS.	TEP	JB	03/21/2025
PERMIT DOCS.			
100% CONSTRUCTION DOCS.	TEP	JB	05/09/2025

ID:	REVISION:	DRAWN:	REVIEWED:	DATE:
1	Addendum #1	TEP	JB	6/3/2025

THESE DRAWINGS AND DESIGNS ARE INSTRUMENTS OF SERVICE. THE DRAWINGS AND ASSOCIATED COPIES THEREOF, INCLUDING ELECTRONIC MEDIA AND CADD FILES, ARE THE PROPERTY OF ARCHITECTS LEWIS + WHITLOCK, P.A. THEIR USE, REPRESENTATION OR REPRODUCTION FOR ANY PURPOSE EXCEPT BY WRITTEN AGREEMENT WITH THE ARCHITECT IS PROHIBITED. THIS COPYRIGHT NOTIFICATION SHALL BE TRUE AS IF DIRECTLY PLACED ON EACH DRAWING EXHIBIT OR RENDERING ON THIS DOCUMENT AND SHALL NOT BE REMOVED FROM THESE DOCUMENTS

Client: Leon County Schools
3420 W. Tharpe St. Suite 100
Tallahassee, FL 32303

Job Title: Griffin Middle School - Phase 2
800 Alabama St. Tallahassee, FL 32304

Consultant: McGINNISS + FLEMING ENGINEERING
JON BARBER, PE 55427 BRIAN WALLACE, PE 75082
8100 ANDERSON ROAD TALLAHASSEE, FL 32311
MFE-INC.COM 850.681.6424

Seal: JON M. BARBER LICENSE No. 55427 STATE OF FLORIDA PROFESSIONAL ENGINEER

This item has been digitally signed and sealed by **Jon Barber, PE** on 6/3/25
Printed copies of this document are not considered signed and sealed and the signature must be verified on any electronic copies.

Project #: **23483**
Phase: **100% Construction Documents**

ALW

Architects Lewis + Whitlock
206 West Virginia St.
Tallahassee, Florida 32301
850.942.1718
www.think3d.net

Description:
New Gymnasium
Plumbing
First Floor Plan

Sheet No.:
P3.0

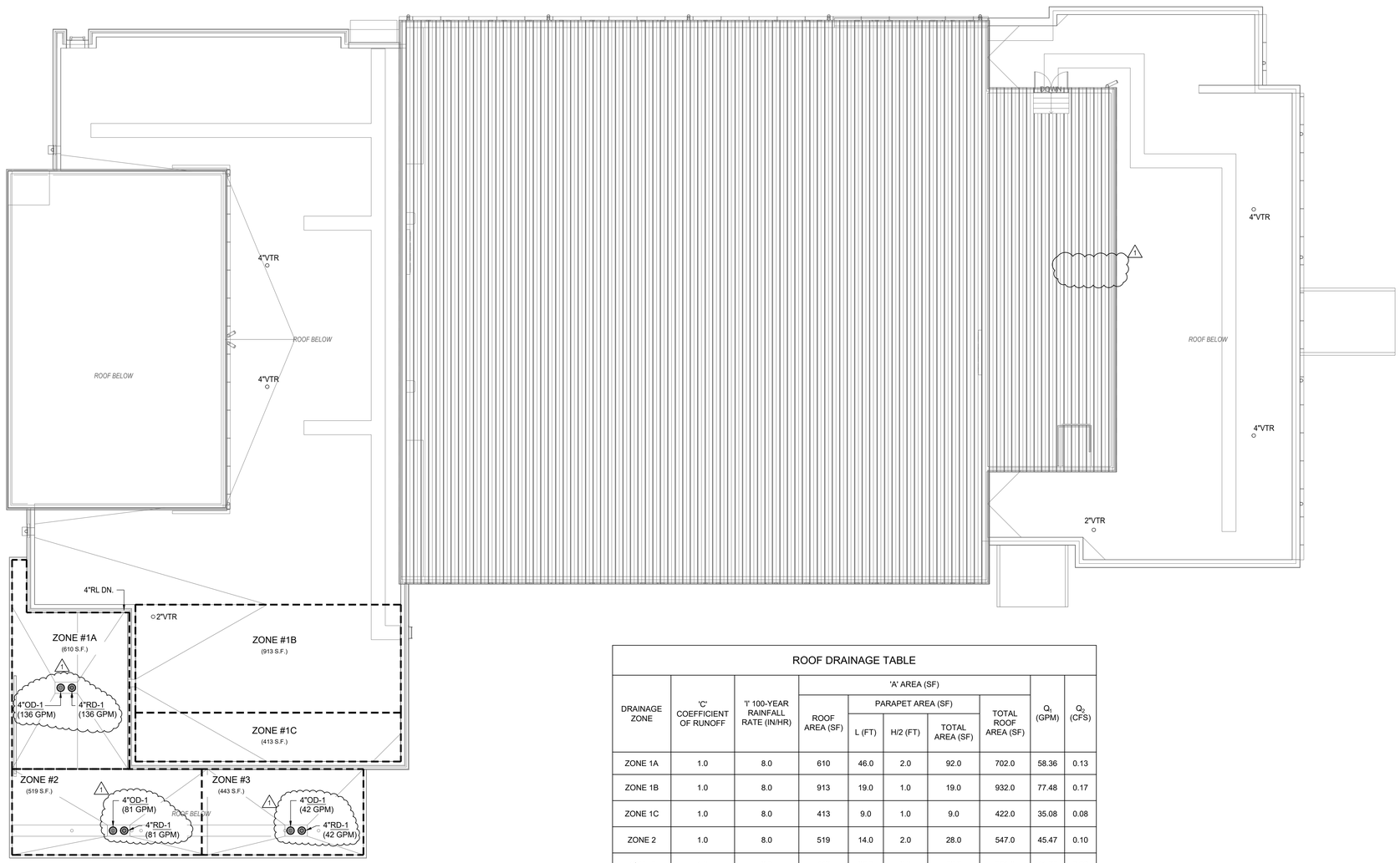

NOTE:

REFERENCE ARCHITECTURAL SECTION DETAIL AT DOWNSPOUT COLUMN / CANOPY ROOF DRAIN, 3/A3.3.

ROOF DRAINAGE TABLE

DRAINAGE ZONE	'C' COEFFICIENT OF RUNOFF	'I' 100-YEAR RAINFALL RATE (IN/HR)	'A' AREA (SF)					Q_1 (GPM)	Q_2 (CFS)
			ROOF AREA (SF)	PARAPET AREA (SF)			TOTAL ROOF AREA (SF)		
				L (FT)	H/2 (FT)	TOTAL AREA (SF)			
ZONE 1A	1.0	8.0	610	46.0	2.0	92.0	702.0	58.36	0.13
ZONE 1B	1.0	8.0	913	19.0	1.0	19.0	932.0	77.48	0.17
ZONE 1C	1.0	8.0	413	9.0	1.0	9.0	422.0	35.08	0.08
ZONE 2	1.0	8.0	519	14.0	2.0	28.0	547.0	45.47	0.10
ZONE 3	1.0	8.0	443	29.0	2.0	58.0	501.0	41.65	0.09
TOTAL ALL ZONES								258.05	0.57

RATIONAL CALCULATION METHOD

Q = (C x I x A)/96.23 where:

Q_1 = Storm Water Runoff (in gallons per minute)
Q_2 = Storm Water Runoff (in cubic feet per second)
C = Coefficient of Runoff
I = Rainfall Intensity (in inches per hour)
A = Area of Drainage Zone (in square feet)

1 Gym Roof Plumbing Plan
3/32" = 1'-0"

PHASE:	DRAWN:	REVIEWED:	DATE:
CONCEPT SCHEM. DESIGN			
DESIGN DEVELOPMENT	TEP	JB	12/20/2024
EARLY DEMOLITION PACKAGE			
80% CONSTRUCTION DOCS.	TEP	JB	03/21/2025
PERMIT DOCS.			
100% CONSTRUCTION DOCS.	TEP	JB	05/09/2025

ID:	REVISION:	DRAWN:	REVIEWED:	DATE:
1	Addendum #1	TEP	JB	6/3/2025

THESE DRAWINGS AND DESIGNINGS ARE INSTRUMENTS OF SERVICE. THE DRAWINGS AND ASSOCIATED COPIES THEREOF, INCLUDING ELECTRONIC MEDIA AND CADD FILES, ARE THE PROPERTY OF ARCHITECTS LEWIS + WHITLOCK, P.A.A. THEIR USE, REPRESENTATION OR REPRODUCTION FOR ANY PURPOSE EXCEPT BY WRITTEN AGREEMENT WITH THE ARCHITECT IS PROHIBITED. THIS COPYRIGHT NOTIFICATION SHALL BE TRUE AS IF DIRECTLY PLACED ON EACH DRAWING EXHIBIT OR RENDERING ON THIS DOCUMENT AND SHALL NOT BE REMOVED FROM THESE DOCUMENTS

Client:
Leon County Schools
3420 W. Tharpe St. Suite 100
Tallahassee, FL 32303

Job Title:
Griffin Middle School - Phase 2
800 Alabama St. Tallahassee, FL 32304

Consultant:
McGINNISS + FLEMING ENGINEERING
JON BARBER, PE 55427 BRIAN WALLACE, PE 75562
6700 THOMAS DRIVE, PANAMA CITY, FL 32408
MFEINC.COM 850.681.6624

Seal:
JON M. BARBER
LICENSE
No. 55427
STATE OF FLORIDA
PROFESSIONAL ENGINEER

This item has been digitally signed and sealed by **Jon Barber, PE** on 6/3/25
Printed copies of this document are not considered signed and sealed and the signature must be verified on any electronic copies.

Project #: **23483**
Phase: **100% Construction Documents**

ALW

Architects Lewis + Whitlock
206 West Virginia St.
Tallahassee, Florida 32301
850.942.1718
www.think3d.net

Description:
New Gymnasium
Plumbing
Roof Plan

Sheet No.:
P3.1

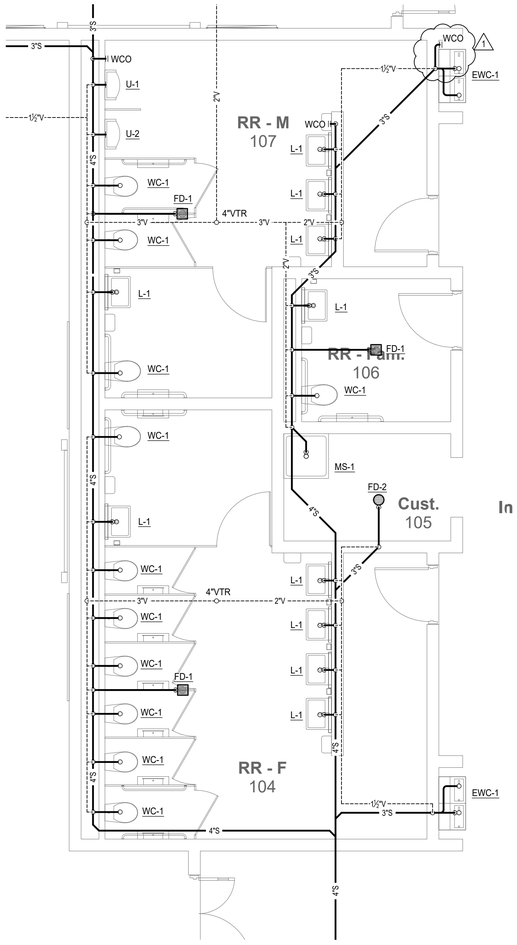

1 Plumbing Enlarged Plan - Sanitary
1/4" = 1'-0"

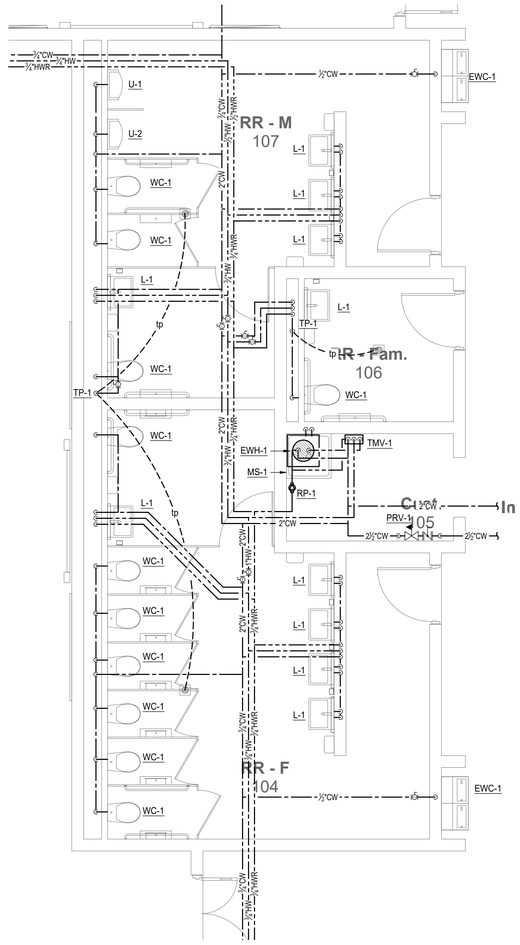

2 Plumbing Enlarged Plan - Domestic Water
1/4" = 1'-0"

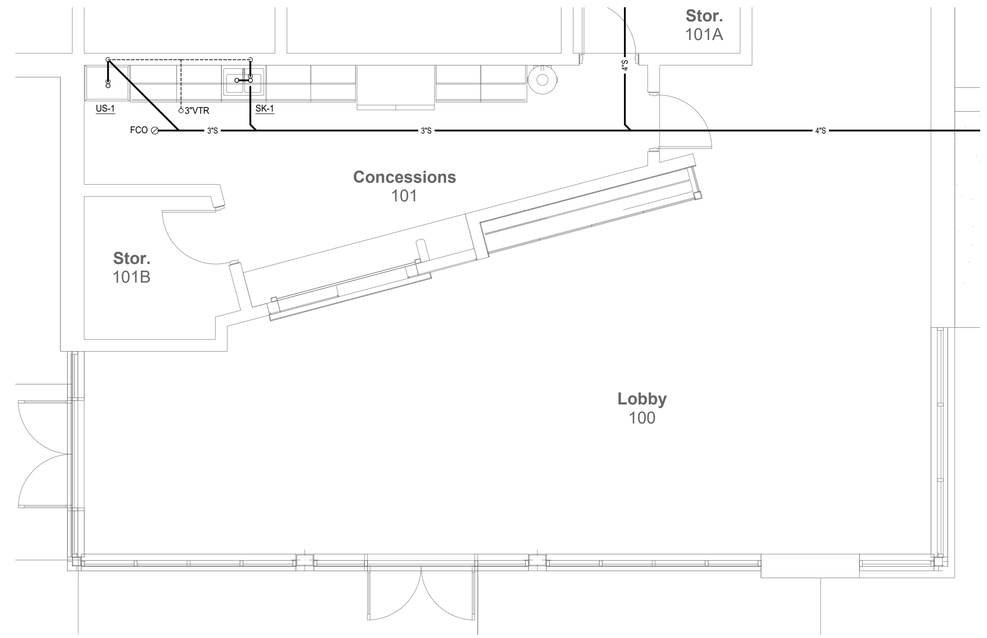

3 Plumbing Enlarged Plan - Sanitary
1/4" = 1'-0"

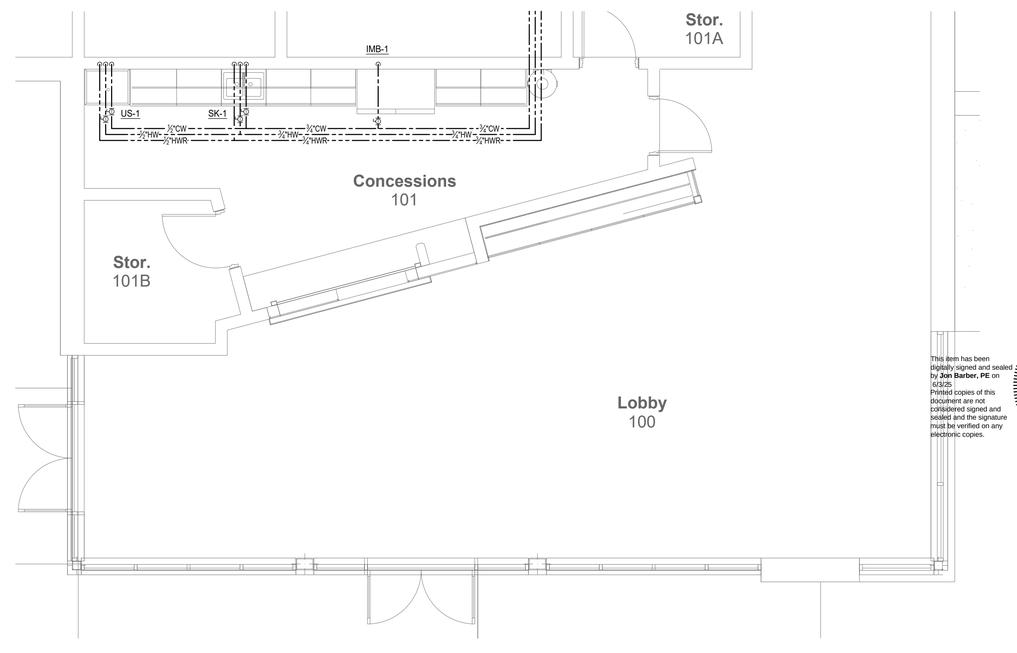

4 Plumbing Enlarged Plan - Domestic Water
1/4" = 1'-0"

PHASE:	DRAWN:	REVIEWED:	DATE:
CONCEPT SCHEM. DESIGN			
DESIGN DEVELOPMENT	TEP	JB	12/20/2024
EARLY DEMOLITION PACKAGE			
80% CONSTRUCTION DOCS.	TEP	JB	03/21/2025
PERMIT DOCS.			
100% CONSTRUCTION DOCS.	TEP	JB	05/09/2025

ID:	REVISION:	DRAWN:	REVIEWED:	DATE:
1	Addendum #1	TEP	JB	6/3/2025

THESE DRAWINGS AND DESIGNINGS ARE INSTRUMENTS OF SERVICE. THE DRAWINGS AND ASSOCIATED COPIES THEREOF, INCLUDING ELECTRONIC MEDIA AND CADD FILES, ARE THE PROPERTY OF ARCHITECTS LEWIS + WHITLOCK, P.A.A. THEIR USE, REPRESENTATION OR REPRODUCTION FOR ANY PURPOSE EXCEPT BY WRITTEN AGREEMENT WITH THE ARCHITECT IS PROHIBITED. THIS COPYRIGHT NOTIFICATION SHALL BE TRUE AS IF DIRECTLY PLACED ON EACH DRAWING EXHIBIT OR RENDERING ON THIS DOCUMENT AND SHALL NOT BE REMOVED FROM THESE DOCUMENTS

Client:
Leon County Schools
3420 W. Tharpe St. Suite 100
Tallahassee, FL 32303

Job Title:
Griffin Middle School - Phase 2
800 Alabama St. Tallahassee, FL 32304

Consultant:
McGINNISS + FLEMING ENGINEERING
JON BARBER, PE 55427
4000 AMERICAN BLVD. ORLANDO, FL 32835
MFEINC.COM 800.651.6824

Seal:
JON M. BARBER
LICENSE
No. 55427
STATE OF FLORIDA
PROFESSIONAL ENGINEER

This item has been digitally signed and sealed by **Jon Barber, PE** on 6/3/25
Printed copies of this document are not considered signed and sealed and the signature must be verified on any electronic copies.

Project #: **23483**
Phase: **100% Construction Documents**

ALW

Architects Lewis + Whitlock
206 West Virginia St.
Tallahassee, Florida 32301
850.942.1718
www.think3d.net

Description:
Plumbing Enlarged Plans

Sheet No.:
P4.0

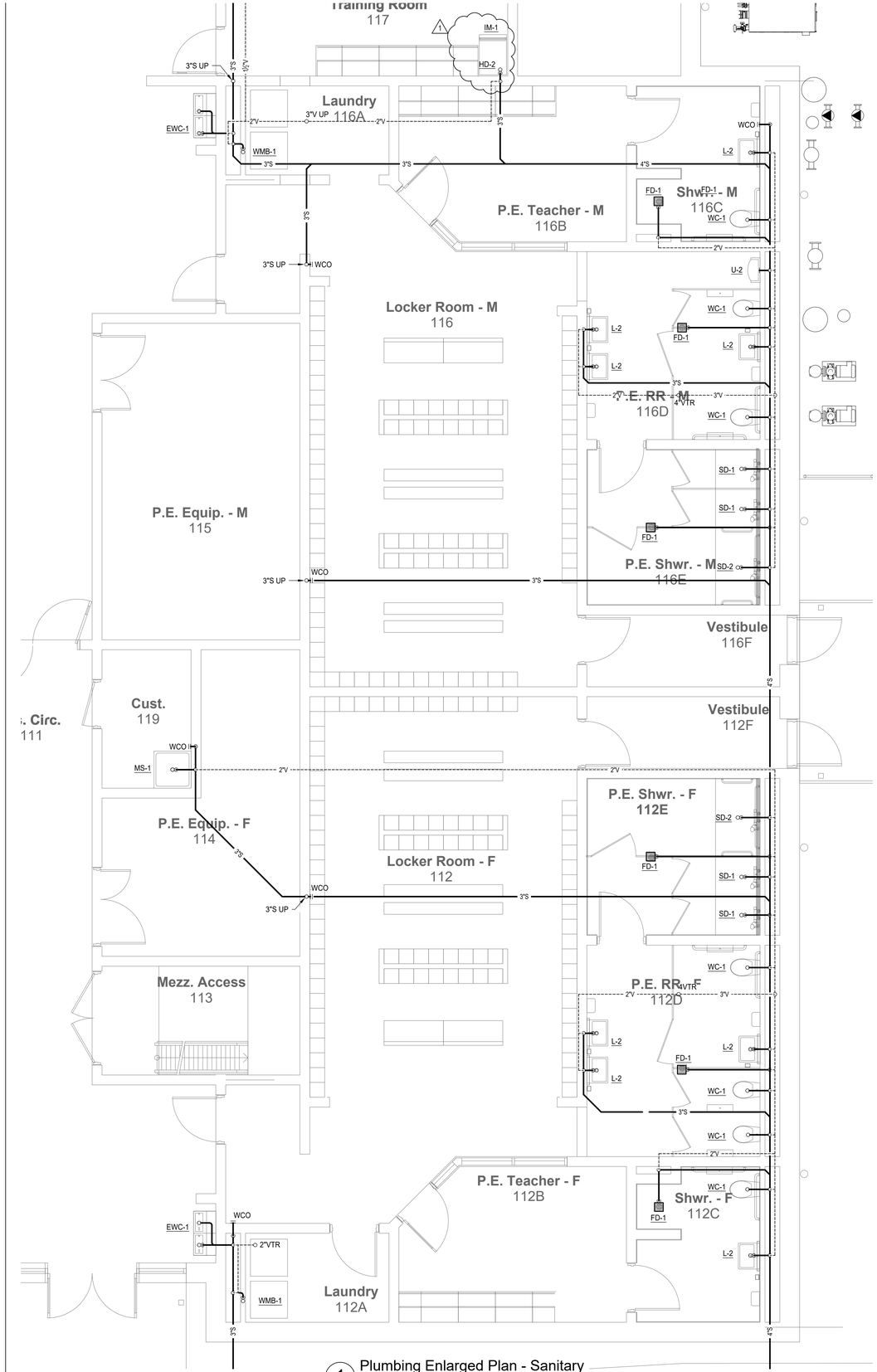

1 Plumbing Enlarged Plan - Sanitary
1/4" = 1'-0"

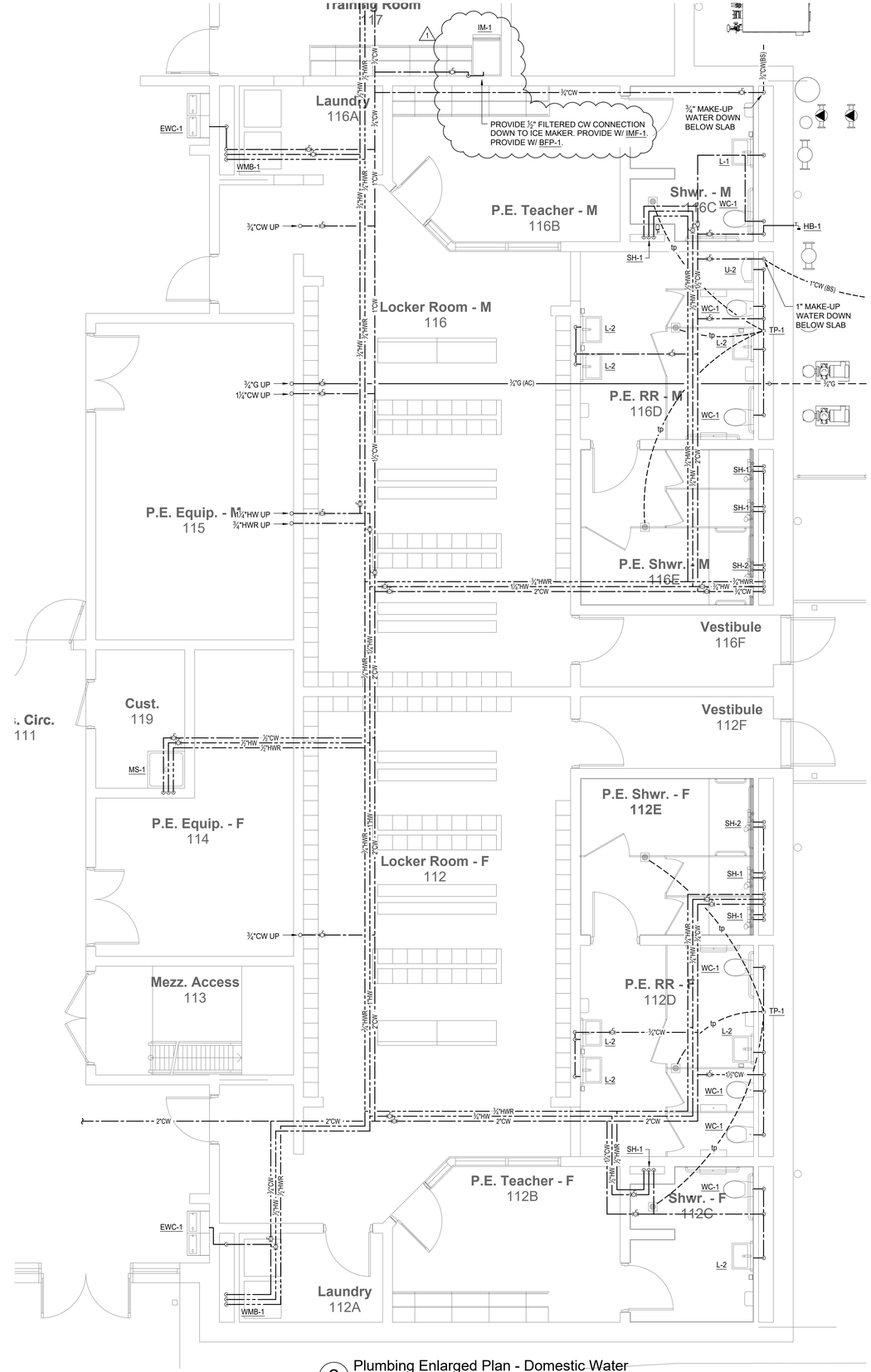

2 Plumbing Enlarged Plan - Domestic Water
1/4" = 1'-0"

PHASE:	DRAWN:	REVIEWED:	DATE:	ID:	REVISION:	DRAWN:	REVIEWED:	DATE:
CONCEPT SCHEM. DESIGN								
DESIGN DEVELOPMENT	TEP	JB	12/20/2024					
EARLY DEMOLITION PACKAGE								
80% CONSTRUCTION DOCS.	TEP	JB	03/21/2025					
PERMIT DOCS.								
100% CONSTRUCTION DOCS.	TEP	JB	05/09/2025					

THESE DRAWINGS AND DESIGNS ARE INSTRUMENTS OF SERVICE. THE DRAWINGS AND ASSOCIATED COPIES THEREOF, INCLUDING ELECTRONIC MEDIA AND CADD FILES, ARE THE PROPERTY OF ARCHITECTS LEWIS + WHITLOCK, P.A. & THEIR USE, REPRESENTATION OR REPRODUCTION FOR ANY PURPOSE EXCEPT BY WRITTEN AGREEMENT WITH THE ARCHITECT IS PROHIBITED. THIS COPYRIGHT NOTIFICATION SHALL BE TRUE AS IF DIRECTLY PLACED ON EACH DRAWING EXHIBIT OR RENDERING ON THIS DOCUMENT AND SHALL NOT BE REMOVED FROM THESE DOCUMENTS

Client:
Leon County Schools
3420 W. Tharpe St. Suite 100
Tallahassee, FL 32303

Job Title:
Griffin Middle School - Phase 2
800 Alabama St. Tallahassee, FL 32304

Consultant:
McGINNISS + FLEMING ENGINEERING
JON BARBER, PE 55427 BRIAN WALLACE, PE 75562
6500 ATLANTIC BLVD. JACKSONVILLE, FL 32211
MFEINC.COM 800.881.6424

Seal:
JON M. BARBER LICENSE No. 55427 STATE OF FLORIDA PROFESSIONAL ENGINEER

This item has been digitally signed and sealed by **Jon Barber, PE** on 6/3/25
Printed copies of this document are not considered signed and sealed and the signature must be verified on any electronic copies.

Project #: **23483**
Phase: **100% Construction Documents**

ALW

Architects Lewis + Whitlock
206 West Virginia St.
Tallahassee, Florida 32301
850.942.1718
www.think3d.net

Description:
Plumbing Enlarged Plans

Sheet No.:
P4.1

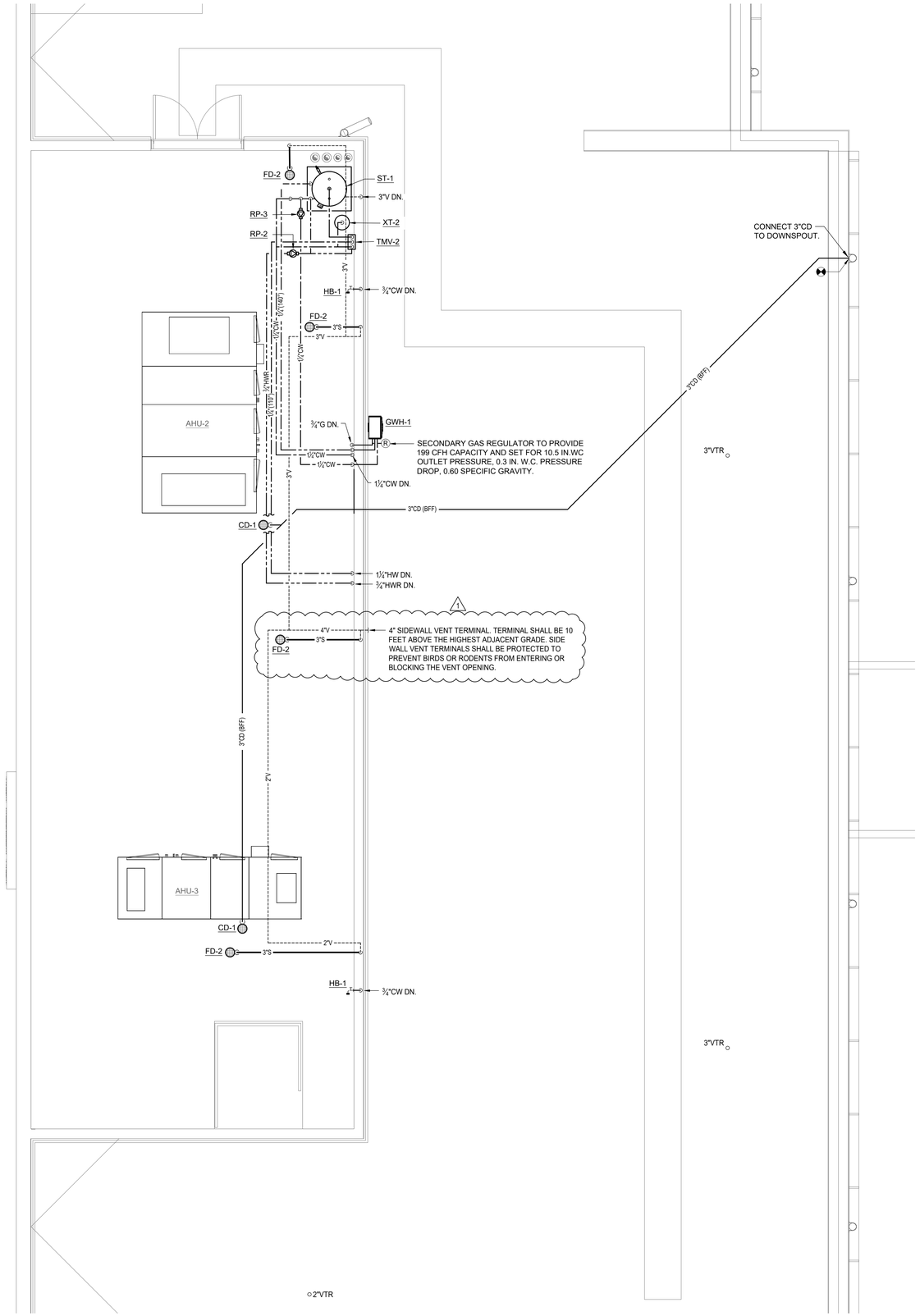

1 Plumbing Enlarged Plan - Equipment Platform

1/4" = 1'-0"

PHASE:	DRAWN:	REVIEWED:	DATE:	ID:	REVISION:	DRAWN:	REVIEWED:	DATE:
CONCEPT SCHEM. DESIGN				1	Addendum #1	TEP	JB	6/3/2025
DESIGN DEVELOPMENT	TEP	JB	12/20/2024					
EARLY DEMOLITION PACKAGE								
80% CONSTRUCTION DOCS.	TEP	JB	03/21/2025					
PERMIT DOCS.								
100% CONSTRUCTION DOCS.	TEP	JB	05/09/2025					

THESE DRAWINGS AND DESIGNS ARE INSTRUMENTS OF SERVICE. THE DRAWINGS AND ASSOCIATED COPIES THEREOF, INCLUDING ELECTRONIC MEDIA AND CADD FILES, ARE THE PROPERTY OF ARCHITECTS LEWIS + WHITLOCK, P.A.A. THEIR USE, REPRESENTATION OR REPRODUCTION FOR ANY PURPOSE EXCEPT BY WRITTEN AGREEMENT WITH THE ARCHITECT IS PROHIBITED. THIS COPYRIGHT NOTIFICATION SHALL BE TRUE AS IF DIRECTLY PLACED ON EACH DRAWING EXHIBIT OR RENDERING ON THIS DOCUMENT AND SHALL NOT BE REMOVED FROM THESE DOCUMENTS

Client:

Leon County Schools
3420 W. Tharpe St. Suite 100
Tallahassee, FL 32303

Job Title:

Griffin Middle School - Phase 2
800 Alabama St. Tallahassee, FL 32304

Consultant:

McGINNISS + FLEMING ENGINEERING
JON BARBER, PE 55427 - BRIAN VALLACE, PE 75500
800 SOUTH ORANGE AVE. - SARASOTA, FL 34236
MFE-INC.COM 800.681.6424

Seal:

JON M. BARBER
LICENSE
No. 55427
STATE OF FLORIDA
PROFESSIONAL ENGINEER

This item has been digitally signed and sealed by **Jon Barber, PE** on 6/3/25
Printed copies of this document are not considered signed and sealed and the signature must be verified on any electronic copies.

Project #: **23483**

Phase: **100% Construction Documents**

ALW

Architects Lewis + Whitlock
206 West Virginia St.
Tallahassee, Florida 32301
850.942.1718
www.think3d.net

Description:
Plumbing Enlarged Plan

Sheet No.:

P4.2

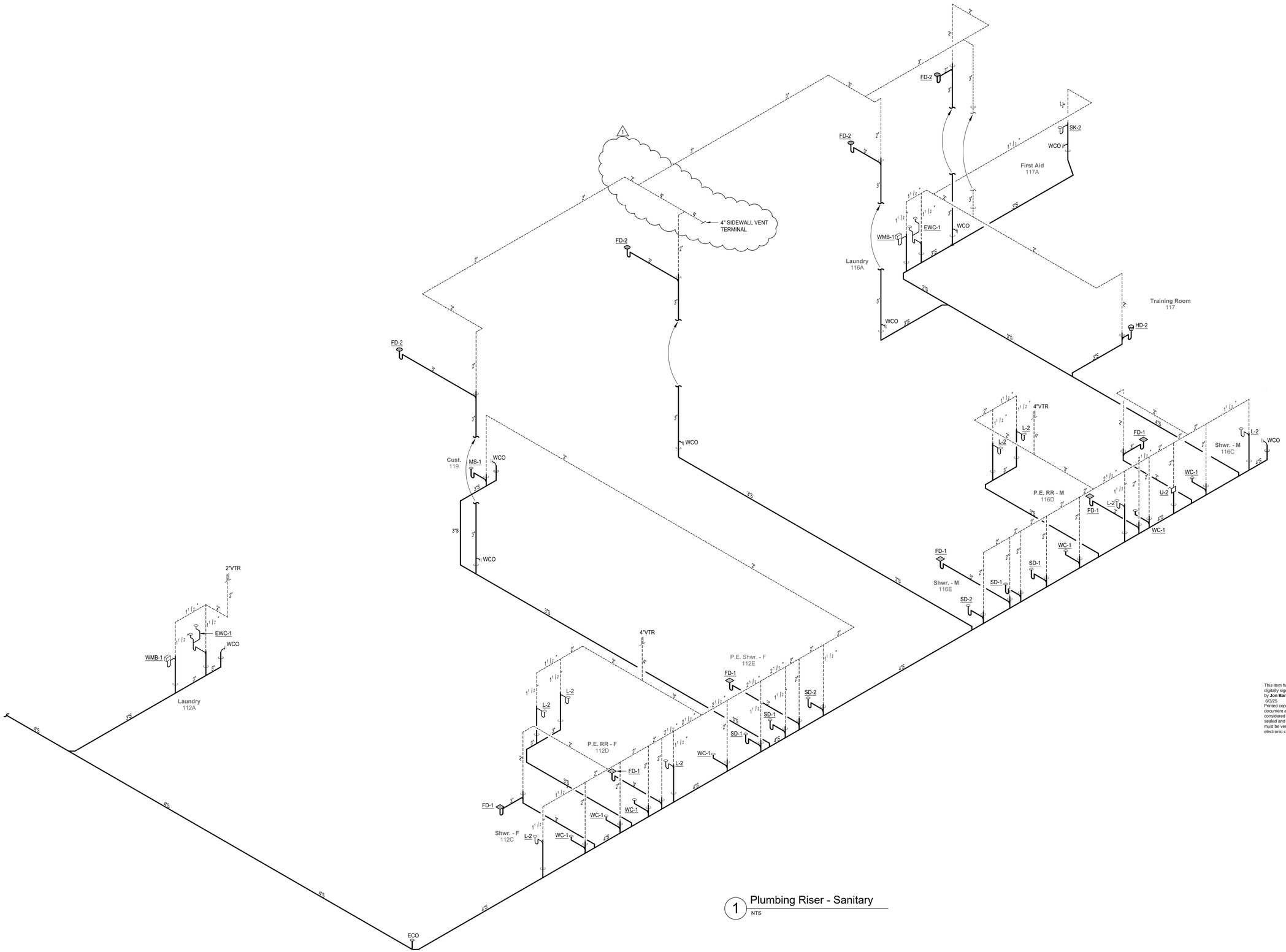

1 Plumbing Riser - Sanitary
NTS

PHASE:	DRAWN:	REVIEWED:	DATE:	ID:	REVISION:	DRAWN:	REVIEWED:	DATE:
CONCEPT SCHEM. DESIGN								
DESIGN DEVELOPMENT	TEP	JB	12/20/2024	1	Addendum #1	TEP	JB	6/3/2025
EARLY DEMOLITION PACKAGE								
80% CONSTRUCTION DOCS.	TEP	JB	03/21/2025					
PERMIT DOCS.								
100% CONSTRUCTION DOCS.	TEP	JB	05/09/2025					

THESE DRAWINGS AND DESIGNINGS ARE INSTRUMENTS OF SERVICE. THE DRAWINGS AND ASSOCIATED COPIES THEREOF, INCLUDING ELECTRONIC MEDIA AND CADD FILES, ARE THE PROPERTY OF ARCHITECTS LEWIS + WHITLOCK, P.A.'S, THEIR USE, REPRESENTATION OR REPRODUCTION FOR ANY PURPOSE EXCEPT BY WRITTEN AGREEMENT WITH THE ARCHITECT IS PROHIBITED. THIS COPYRIGHT NOTIFICATION SHALL BE TRUE AS IF DIRECTLY PLACED ON EACH DRAWING EXHIBIT OR RENDERING ON THIS DOCUMENT AND SHALL NOT BE REMOVED FROM THESE DOCUMENTS

Client: Leon County Schools
3420 W. Tharpe St. Suite 100
Tallahassee, FL 32303

Job Title: Griffin Middle School - Phase 2
800 Alabama St. Tallahassee, FL 32304

Consultant: McGINNISS + FLEMING ENGINEERING
JON BARBER, PE 55427 BRIAN WALLACE, PE 75562
6700 THOMAS DRIVE, PANAMA CITY, FL 32408
MFEINC.COM 850.681.6424

Seal: JON M. BARBER LICENSE No. 55427 STATE OF FLORIDA PROFESSIONAL ENGINEER

This item has been digitally signed and sealed by **Jon Barber, PE** on 6/3/25
Printed copies of this document are not considered signed and sealed and the signature must be verified on any electronic copies.

Project #: **23483**
Phase: **100% Construction Documents**

ALW

Architects Lewis + Whitlock
206 West Virginia St.
Tallahassee, Florida 32301
850.942.1718
www.think3d.net

Description:
Plumbing Riser - Sanitary

Sheet No.:
P5.1

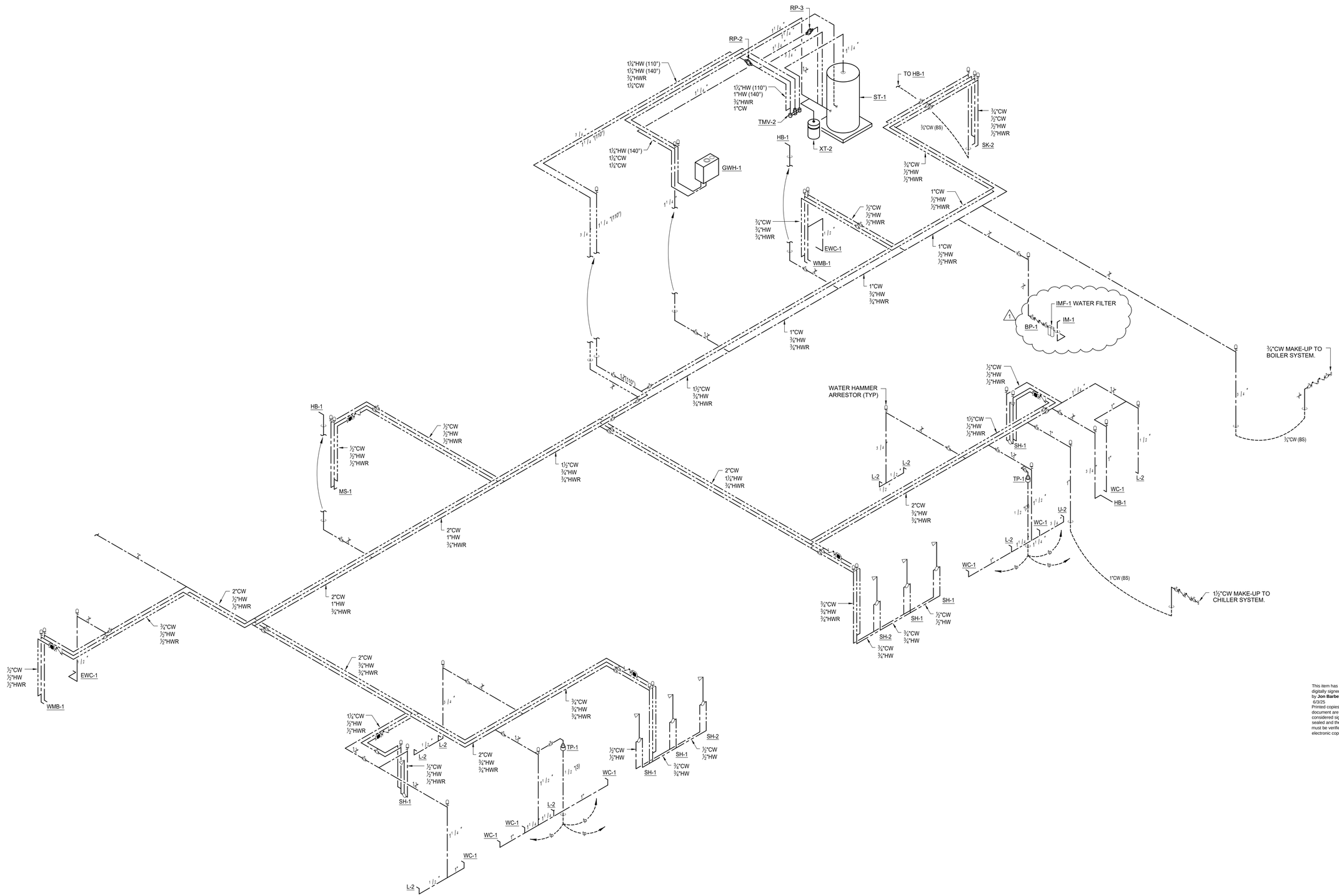

1 Plumbing Riser - Domestic Water

NTS

PHASE:	DRAWN:	REVIEWED:	DATE:	ID:	REVISION:	DRAWN:	REVIEWED:	DATE:
CONCEPT SCHEM. DESIGN								
DESIGN DEVELOPMENT	TEP	JB	12/20/2024	1	Addendum #1	TEP	JB	6/3/2025
EARLY DEMOLITION PACKAGE								
80% CONSTRUCTION DOCS.	TEP	JB	03/21/2025					
PERMIT DOCS.								
100% CONSTRUCTION DOCS.	TEP	JB	05/09/2025					

THESE DRAWINGS AND DESIGNS ARE INSTRUMENTS OF SERVICE. THE DRAWINGS AND ASSOCIATED COPIES THEREOF, INCLUDING ELECTRONIC MEDIA AND CADD FILES, ARE THE PROPERTY OF ARCHITECTS LEWIS + WHITLOCK, P.A. THEIR USE, REPRESENTATION OR REPRODUCTION FOR ANY PURPOSE EXCEPT BY WRITTEN AGREEMENT WITH THE ARCHITECT IS PROHIBITED. THIS COPYRIGHT NOTIFICATION SHALL BE TRUE AS IF DIRECTLY PLACED ON EACH DRAWING EXHIBIT OR RENDERING ON THIS DOCUMENT AND SHALL NOT BE REMOVED FROM THESE DOCUMENTS

Client: Leon County Schools
3420 W. Tharpe St. Suite 100
Tallahassee, FL 32303

Job Title: Griffin Middle School - Phase 2
800 Alabama St. Tallahassee, FL 32304

Consultant: McGINNISS + FLEMING ENGINEERING
JON BARBER, PE 55427 | BRIAN WALLACE, PE 75656
800 SOUTH MONROE ST. | TALLAHASSEE, FL 32301
MFE-INC.COM | 850.681.6424

Seal: JON M. BARBER LICENSE No. 55427 STATE OF FLORIDA PROFESSIONAL ENGINEER

This item has been digitally signed and sealed by **Jon Barber, PE** on 6/3/25
Printed copies of this document are not considered signed and sealed and the signature must be verified on any electronic copies.

Project #: **23483**

Phase: **100% Construction Documents**

ALW

Architects Lewis + Whitlock
206 West Virginia St.
Tallahassee, Florida 32301
850.942.1718
www.think3d.net

Description:
Plumbing Riser - Domestic Water

Sheet No.:
P5.3

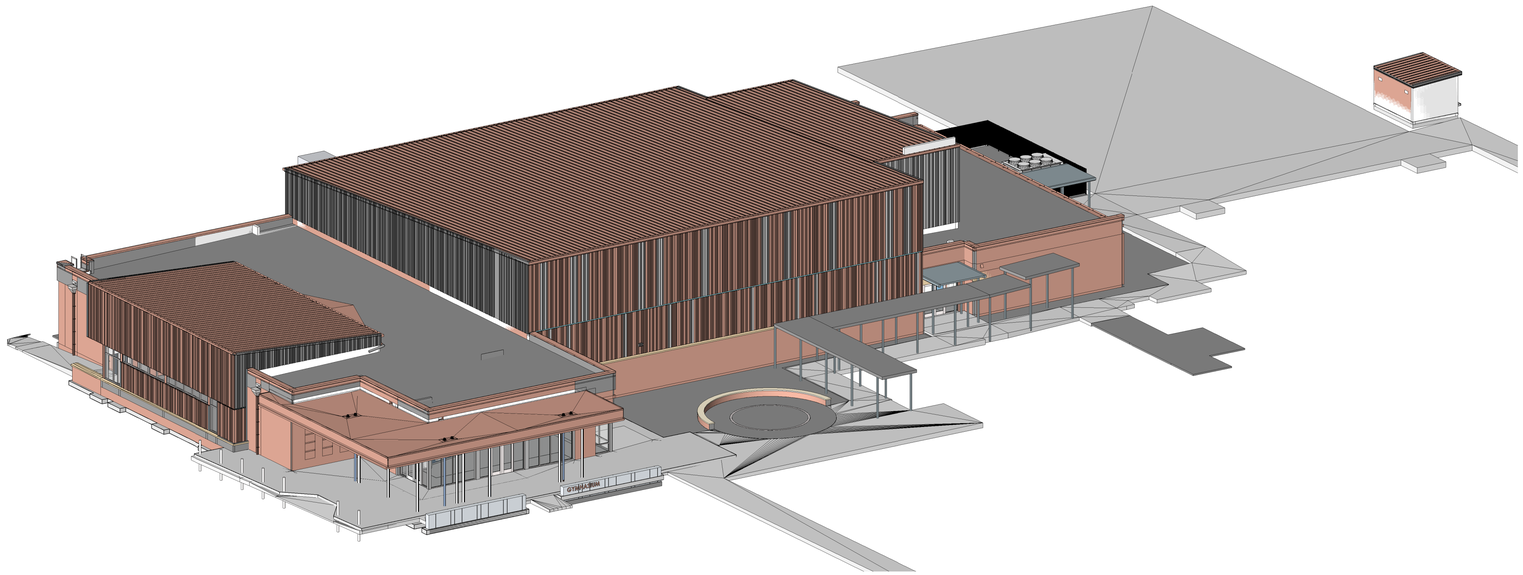

GRIFFIN MIDDLE SCHOOL - PHASE 2

LEON COUNTY SCHOOLS

SHEET LIST

SHEET NUMBER	SHEET NAME	CD 5/9/25	CURRENT REVISION	Current Revision Date
S0.0	COVER SHEET	●	1	6/3/2025
S0.1	ABBREVIATIONS & SYMBOLS	●		
S0.2	STRUCTURAL NOTES	●	1	6/3/2025
S0.3	STRUCTURAL NOTES	●		
S0.4	STRUCTURAL NOTES	●		
S0.6	STRUCTURAL INSPECTION PLAN	●		
S0.7	STRUCTURAL INSPECTION PLAN	●		
S0.11	ROOF WIND DIAGRAM	●		
S0.12	WALL WIND DIAGRAMS	●		
S1.1	FOUNDATION & FIRST FLOOR PLAN	●	1	6/3/2025
S1.2	MECH. MEZZANINE/LOW ROOF FRAMING PLAN	●	1	6/3/2025
S1.3	HIGH ROOF FRAMING PLAN	●	1	6/3/2025
S3.1	BUILDING / WALL SECTIONS	●	1	6/3/2025
S3.2	BUILDING / WALL SECTIONS	●	1	6/3/2025
S3.3	BUILDING / WALL SECTIONS	●	1	6/3/2025
S3.4	WALL SECTIONS	●		
S3.5	BUILDING / WALL SECTIONS	●		
S3.6	BUILDING / WALL SECTIONS	●	1	6/3/2025
S4.1	TYPICAL SCHEDULES	●		
S4.2	TYPICAL SCHEDULES	●		
S4.3	TYPICAL SCHEDULES	●	1	6/3/2025
S5.1	TYPICAL FOUNDATION DETAILS	●		
S5.2	TYPICAL FOUNDATION DETAILS	●	1	6/3/2025
S5.11	TYPICAL SLAB ON GRADE DETAILS	●		
S5.21	TYPICAL MASONRY DETAILS	●		
S5.22	TYPICAL MASONRY DETAILS	●		
S5.23	TYPICAL MASONRY DETAILS	●		
S6.1	TYPICAL STEEL DETAILS	●		
S6.2	TYPICAL STEEL DETAILS	●		
S6.3	STEEL DETAILS	●	1	6/3/2025
S6.21	TYPICAL STEEL ROOF DETAILS	●		
S6.22	TYPICAL STEEL ROOF DETAILS	●		
S6.23	TYPICAL STEEL ROOF DETAILS	●	1	6/3/2025
S6.24	TYPICAL STEEL DETAILS	●	1	6/3/2025
S6.25	TYPICAL ROOF TOP UNIT DETAILS	●	1	6/3/2025

PHASE:	DRAWN:	REVIEWED:	DATE:	ID:	REVISION:	DRAWN:	REVIEWED:	DATE:
SCHEMATIC DESIGN				1	Addendum 1			6/3/2025
DESIGN DEVELOPMENT	T. CANNON	C. CHILDERS	12-20-2024					
80% CONSTRUCTION DOCS.	T. CANNON	C. CHILDERS	03-21-2025					
CONSTRUCTION DOCS.	T. CANNON	C. CHILDERS	05-09-2025					

THESE DRAWINGS AND RENDERINGS ARE INSTRUMENTS OF SERVICE. THE DRAWINGS AND ASSOCIATED COPIES THEREOF, INCLUDING ELECTRONIC MEDIA AND CADD FILES, ARE THE PROPERTY OF ARCHITECTS LEWIS + WHITLOCK, P.A.A. THEIR USE, REPRESENTATION OR REPRODUCTION FOR ANY PURPOSE OTHER THAN WITH WRITTEN AGREEMENT WITH ARCHITECTS LEWIS + WHITLOCK, P.A. IS PROHIBITED. NO OTHER USE OR REPRODUCTION IS PERMITTED. THE CONTENT OF ANY DRAWING, SPECIFICATION OR RENDERING PLACED ON EACH DRAWING EXHIBIT OR RENDERING ON THIS DOCUMENT AND SHALL NOT BE REMOVED FROM THESE DOCUMENTS

Client:
Leon County Schools
3420 W. Tharpe St. Suite 100
Tallahassee, Florida 32303

Job Title:
Griffin Middle School - Phase 2
800 Alabama St. Tallahassee, FL 32304

Consultant:
BLISS & NYITRAY, INC.
STRUCTURAL ENGINEERS
Certificate of Authorization No. 674
227 N Bronough St., Suite 7300
Tallahassee Florida, 32301
T 850-222-4454 F 850-222-9425
www.bnienginneers.com

Project #: 23483 / BNI No. 23T22.03

Phase: CONSTRUCTION DOCUMENTS

This item has been digitally signed and sealed by Christopher S. Childers, PE on 6/3/2025. Printed copies of this document are not considered signed and sealed and the signature must be verified on any electronic copies.

CHRISTOPHER S. CHILDERS
LICENSE
NO. 50812
STATE OF FLORIDA
PROFESSIONAL ENGINEER

Christopher S. Childers, P.E.
Fla. Reg. No. 50812

TO THE BEST OF MY KNOWLEDGE, THE PLANS AND SPECIFICATIONS COMPLY WITH THE APPLICABLE MINIMUM BUILDING CODES.

ALW

Architects Lewis + Whitlock
206 West Virginia St.
Tallahassee, Florida 32301
850.942.1718
www.think3d.net

Description:
COVER SHEET

Sheet No.:
S0.0

STRUCTURAL NOTES

GENERAL NOTES

GN-1 The governing Code for this Project is the Florida Building Code, 8th Edition (2023). This Code prescribes which edition of each referenced standard applies to this Project.

GN-2 To the best of our knowledge, the Structural Drawings and Specifications comply with the applicable requirements of the governing Building Code.

GN-3 Construction is to comply with the requirements of the governing Building Code and all other applicable Federal, State, and Local Codes, Standards, Regulations and Laws.

GN-4 Use these Notes in conjunction with the Plan Specifications or Project Specifications. If a conflict exists, the more stringent governs.

GN-5 See Plan Specifications or Project Specifications for testing. See the Structural Inspection Plan for inspection requirements.

GENERAL NOTES - CONTRACTOR REQUIREMENTS

GN-6 Contractor refers to the General Contractor, Construction Manager, or the organization that is assigned to have overall responsibility and supervision of the Project.

GN-7 The Contractor shall be solely responsible for, and have control over, the means, methods, supervision, techniques, sequences, procedures of construction, quality, and correctness of the work. The Contractor is solely responsible for jobsite safety including all OSHA requirements.

GN-8 The Contractor shall coordinate all Contract Documents with field conditions and dimensions and Project Shop Drawings prior to construction. Do not scale drawings; use only printed dimensions. Report any discrepancies in writing to the Architect prior to proceeding with work. Do not change size or location of structural members without written instructions from the Structural Engineer of Record.

GN-9 Contractors who discover discrepancies, omissions or variations in the Contract Documents during bidding shall immediately notify the Architect. The Architect will resolve the condition and issue a written clarification.

GN-10 The Contractor shall protect adjacent property, his own work and the public from harm. The Contractor is advised to document the condition of adjacent property with a photographic survey and other documentation, including crack monitoring, prior to and during construction.

GN-11 The Structure is designed to be structurally sound when completed. The Contractor shall not overload the structure during construction. Prior to completion, the Contractor is responsible for stability and temporary bracing, including, but not limited to, masonry walls. Wherever the Contractor is unsure of these requirements, the Contractor shall retain a Florida Licensed Engineer to design and inspect the temporary bracing and stability of the structure.

GENERAL NOTES - DRAWINGS

GN-12 The Structural drawings shall be used in conjunction with the architectural drawings and all other drawings and documents, including shop drawings prepared by equipment suppliers and delegated engineers.

GN-13 Openings shown on Structural Drawings are only pictorial. See the Architectural for complete information such as slab depressions, slopes, curbs, finishes, and opening locations in structural members as required by MEP systems and architectural elements.

GN-14 Details labeled "typical" apply to all situations that are the same or similar to those specifically referenced, whether or not they are keyed in at each location. Questions regard-ing the applicability of typical details shall be resolved by the Architect.

GN-15 When joists or beams are not specifically dimensioned, they are located equally between gridlines or equally between dimensioned members.

GN-16 See Architectural drawings for fireproofing and waterproofing details and requirements.

GENERAL NOTES - DESIGN LOADS

GN-17 Design Loads:

OCCUPANCY	LIVE LOAD	DEAD LOAD	CONCENTRATED LOAD
Roof Flat	30 psf (or Rain Load)	25 psf	300#
Roof Sloping	20 psf (or Rain Load)	25 psf	300#
Classrooms	40 psf	20 psf	1,000#
Offices	50 psf	15 psf	2,000#
Office Partitions	15 psf		
Public Areas	100 psf	20 psf	
Stairs	100 psf	5 psf	300#
Storage	125 psf	10 psf	
Mechanical Room	150 psf	15 psf	
Electrical Room	150 psf	15 psf	
Planter Wet Soil Density	110 pcf		

Live Load reduction for beams, columns and foundations has been taken in accordance to the governing building code. Live Load reduction for slabs and joist is not permitted.

Design superimposed dead loads listed above do not include masonry walls or other concentrated loads. See architectural drawings for these loads. Concentrated live loads do not act concurrently with area live loads.

GN-18 Handrails and Guards:

Linear Loading	50 lbs/ft
Concentrated Loading	200 lbs
Intermediate Rails	50 lbs
Applied Area	1 sf

Loads shall be applied to act in any direction at any point on the handrail or top rail to produce the maximum load effect. Linear and concentrated loading shall not be applied concurrently.
Glass in handrails and guards shall be designed with a safety factor of 4.

GN-19 Design Rain Loads:

Rain Load	30.7 psf
Rain Intensity	i = 5.43 in/hr
Static Head	ds = 2.5 in
Hydraulic Head	dh = 1.4 in

GN-20 Design Flood Loads:

Governing Code	FBC 8th Edition (2023) / ASCE 24-14
Flood Insurance Rate Map Page Number	12073C0283F
Flood Zone	X (unshaded)
Flood Design Class	N/A
Base Flood Elevation	See Civil Drawings
Elevation of Lowest Horizontal Structure	See Civil Drawings
Dry Floodproof Elevation	See Civil Drawings

GN-21 Design Wind Loads:

Governing Code	FBC 8th Edition (2023) / ASCE 7-22
Building Risk Category	III (Not designed as a hurricane shelter)
Ultimate Wind Speed	Vult = 130 mph
Allowable Stress Design Wind Speed	Vasd = 101 mph
Mean Roof Height	33 feet
Directionality Factor	Kd = 0.85
Gust-Effect Factor	G = 0.85
Exposure	B
Internal Pressure Coefficient	GCpi = +/-0.18

Ultimate Tornado Wind Speed Vt = 50 mph
Effective Plan Area Ae = 22,000 SF
Tornado Directionality Factor KdT = 0.75 typical, 0.90 for Zone 1'
Tornado Internal Pressure Coefficient GCpiT = +0.55, -0.18
As instructed by Leon County Schools Staff this building is not to be designed as a shelter and therefore should not be used as a shelter during a hurricane event.

a. Roof Top Equipment Wind Loads

Horizontal Force	30 psf Service Load
Uplift Force	24 psf Service Load

All roof top mechanical equipment, equipment curbs, equipment tie downs, including all connections to the building structure for wind loading are to be designed and engineered by a Specialty Engineer retained by the mechanical equipment supplier. Signed and sealed drawings and calculations are to be submitted to the Engineer of Record for review and approval. The equipment manufacture shall provide the attachment of the unit to the structure and submit to the EOR loads, locations, and method of attachment. The EOR will make provisions in the design of the primary structural frame to accommodate the loads and attachments.

SHOP DRAWINGS AND OTHER SUBMITTALS

SD-1 Refer to the applicable Plan Specifications or Project Specifications for technical content requirements. Incomplete submittals will be returned without review.

SD-2 Submit specific components, such as columns, footings, etc., in a single package. Submit similar floors together.

SD-3 On first submittal, clearly flag and cloud all differences from the Contract Documents. On resubmittals, flag and cloud all changes and additions to previous submittal; only clouded items will be reviewed.

SD-4 Submittals for special structural, load-bearing items that are required by Codes or Standards to resist forces must be prepared by, or under the direct supervision of, a Delegated Engineer. Examples include Strut-Channel Framing and Connections, Precast Concrete, Open Web Steel Joists, Structural Steel Connections, Structural Cold-Formed Steel Framing, Exterior Enclosure Systems, Roof-top Unit Tie-downs, and Shoring and Reshoring.

SD-5 A Delegated Engineer is defined as a Florida Licensed Engineer who specializes in and undertakes the design of Structural Components or Structural Systems included in a specific submittal prepared for this Project and is an employee or officer of, or consultant to, the Contractor, Subcontractor, Fabricator, or Erector responsible for the submittal. The Delegated Engineer shall sign, seal and date the submittal, including calculations and drawings. See Plan Specifications or Project Specifications for more specific criteria.

SD-6 The Trade Contractor is responsible for confirming and correlating dimensions at the job sites, for tolerances, clearances, quantities, fabrication processes and techniques of construction, coordination of the work with other trades and full compliance with the Contract Documents.

SD-7 The Contractor shall review and approve submittals, including substitution requests and shop drawings, and shall sign and date each drawing prior to submitting to the Architect. This approval is to confirm that the submittal is complete, complies with the submittal requirements and is coordinated with field dimensions, other trades, erection sequencing and constructability. Submittals not reviewed by the Contractor will be returned without review.

SD-8 Bliss & Nyitray (BNI) reviews submittals to confirm that the submittal is in general conformance with the design concept presented in the Contract Documents. Quantities and dimensions are not checked. Notations on submittals do not authorize changes to the contract sum. Checking of the submittal by BNI shall not relieve the Contractor of responsibility for deviations from the Contract Documents and from errors or omissions in the submittal.

SD-9 BNI's review of Delegated Engineer submittals is limited to verifying that the specified structural submittal has been furnished, signed and sealed by the Delegated Engineer and that the Delegated Engineer has understood the design intent and used the specified structural criteria. No detailed check of calculations is made. The Delegated Engineer is solely responsible for his/her design, including but not limited to the accuracy of his/her calculations and compliance with the applicable codes and standards.

SD-10 BNI may transfer to the Contractor BIM files, CAD files or other electronic data for use in preparing Shop Drawings. The contractor shall email a request for BIM or CAD files along with an acknowledgement that he/she has read and agreed to the following terms and conditions:

A. This electronic data remains the property of BNI, and in no case shall the transfer of these files be considered a sale. The files shall not be used for other projects, additions to this project, or for completion of this project by others.
B. The Contractor is responsible for assuring that the electronic data accurately represents the Contract Documents. In the event of a conflict, the Contract Documents shall govern.
C. The electronic data is current as of the date of transfer but may subsequently be revised or supplemented. If so, then the Contractor may request updated electronic data.
D. The use of these electronic data shall not modify Contractor's responsibility for coordination with other trades, or for the proper checking and coordination of dimensions, details, member sizes and gage, and quantities of materials to facilitate complete and accurate fabrication and erection.
E. Do not scale dimensions since the electronic data may not be precise and, in some cases, have been intentionally altered for presentation purposes.
F. Contractor shall indemnify, defend and hold harmless BNI from all claims, damages, losses, expenses, penalties, and liabilities, including attorneys' fees, arising out of or resulting from the use of the electronic data by Contractor or others.

SHALLOW FOUNDATIONS

SF-1 Foundation design, soil preparation and compaction are based on Geotechnical Investigation, Data and Recommendations in Report #113-24-40-1990 by Ardaman & Associates, Inc. dated January 13, 2025. 1

SF-2 Footing sizes and reinforcing are based on an allowable soil bearing capacity of 2000 psf. All footings shall bear on compacted fill, natural soil or rock prepared per the Geotechnical Report.

SF-3 Subgrade preparation shall be field controlled and tested by a Licensed Soils Engineer in accordance with the Geotechnical Report. At completion, that Engineer shall prepare and submit to the Owner, Architect, Contractor and Structural En-gineer a signed and sealed letter indicating that the recommendations of the Geotechni-cal Report have been followed.

SF-4 Foundation excavations shall be dry prior to placing concrete. Contact Geotechnical Engineer if a dry condition cannot be achieved. Reinforcing in salt-water environment shall be sprayed with fresh water no more than 1 hour prior to concrete placement.

SF-5 Provide waterproofing of underground structural members as indicated on the Architectural drawings.

SF-6 Center all footings under their respective columns or walls, u.o.n.

SF-7 Top of all footings is 2 feet below the ground floor level, u.o.n.

EXCAVATION, BACKFILL AND DEWATERING

EB-1 The Contractor is solely responsible for all excavation procedures including lagging, shoring, and protection of adjacent property, structures, streets and utilities in accordance with the requirements of the local building department and OSHA regulations. Do not excavate within one foot of the angle of repose of any soil bearing foundation unless the foundation is properly protected against settlement.

EB-2 For basement walls, do not backfill against walls until 7 days after the walls are braced by the structure or are temporarily braced.

EB-3 Do not backfill cantilevered retaining walls until concrete has attained 100% of its design strength and is 7 days old. Do not backfill until after completion and inspec-tion of any waterproofing.

EB-4 In no case shall bulldozers or other heavy equipment be permitted closer than 5 feet from any retaining wall. If it is necessary to operate such equipment closer than 8 feet to the wall, the Contractor shall be the sole responsible party and at their own expense shall provide adequate support or bracing of the wall to withstand the additional superimposed loads from such equipment.

EB-5 The Contractor is responsible for the disposal of all accumulated water in a manner that does not in-convenience or damage the work.

SLABS ON GRADE

SG-1 Refer to Geotechnical Report for subgrade preparation more than 12" below bottom of slab.

SG-2 Above subgrade, use fill containing not more than 10% passing #200 sieve and maximum 1 inch diameter. Compact to 95% of maximum dry density as determined by modified proctor ASTM D-1557. Each layer of fill shall not exceed 6" loose thickness. Compact prior to placement of the next layer.

SG-3 Fill placement and compaction shall be monitored and accepted by the testing agency. Take a min. of one field density test (ASTM D-1556 or D-2922) for each 2,500 square feet of each layer. The testing agency shall randomly select test locations.

SG-4 For interior slabs use 10 mil vapor retarder complying with ASTM E1745 between soil and bottom of slab and install in conformance with ASTM E1643. Lap joints 6" and seal with manufacturer approved tape. Repair all punctures and tears, and seal around all penetrations. Do not use any sheeting below exterior concrete slabs.

SG-5 Reinforce slabs on grade with welded wire reinforcement supplied in flat sheets only. Use chairs to support wire reinforcement in the center of slab. Fiber reinforced concrete shall not be used at slabs to receive a broom finish.

SG-6 Provide crack control joints at 10 feet maximum to limit areas between joints to 100 sq. ft. in all floating slabs on grade 2 hours after final finish but not more than 8 hours after completion of the pour. Aspect ratio shall not exceed 1.25. Avoid L-shaped panels. Locate to conform to bay spacing whenever possible, add crack control joints at re-entrant corners which tend to invite cracks.

SG-7 In sidewalks and walkways, locate isolation joints at 20 ft. o.c. maximum score and tool between isolation joints in equal bays of 5 ft. or less.

SG-8 See the Architectural Drawings for slab on grade depressions and other requirements.

SG-9 Termite protection shall be provided by a Registered Termiticides, and a certificate of compliance shall be issued to the building department per the Florida Building Code, section 1816. Refer to the Architectural Drawings for additional information.

REINFORCED CONCRETE

RC-1 Comply with ACI 301 and 318 and Plan Specifications or Specification Sections 031000, 032000 and 033000.

RC-2 Provide structural concrete with a minimum ultimate compressive design strength in 28 days as follows:

Element	Strength
Footings	3000 psi
Columns & Poured Walls	4000 psi
Elevated Beams & Slabs	4000 psi
Slabs on Grade	3000 psi
Composite Steel Decks	4000 psi

RC-3 Use normal weight concrete for all structural members. u.o.n.

RC-4 Provide ASTM A615 Grade 60 reinforcing steel. Reinforcing shall be accurately placed, rigidly supported and firmly tied in place, with appropriate bar supports and spacers. Lap continuous reinforc-ing 48 bar dia. Provide cover over reinforcing as follows:

Element	Bottom	Top	Sides
Footings	3"	2"	3"
Beams Above Grade	1 1/2"	1 1/2"	1 1/2"
Columns	-	-	1 5/8"
Slabs on Grade	2"	1"	2"
Slabs Above Grade	3/4"	3/4"	1"
Slabs Exposed to Weather	1 1/2"	1 1/2"	1 1/2"
Walls Retaining Fill	-	-	2"
Walls Exposed to Weather	-	-	1 1/2"
Walls - all others	-	-	1"

RC-5 Provide A706 reinforcing steel when the rebar is to be welded. Do not weld A615 bars.

RC-6 Deformed Bar Anchor (DBA) shall conform to ASTM A496 with a minimum yield strength of 70,000 PSI. Reinforcing bars, A615 or A706, is not an acceptable substitution for DBA's.

RC-7 Provide galvanized reinforcement in areas exposed to the environment, such as balconies, or as indicated on the drawings.

RC-8 Where specified, provide plain, cold-drawn electrically-welded wire reinforcement conforming to ASTM A185. Supply in flat sheets only. Lap splice two cross wire spacings.

RC-9 In addition to specified reinforcing, provide 1 tons of reinforcing bars to be detailed, fabricated, delivered to site and placed as directed by the Architect/Engineer to account for unforeseeable conditions.

RC-10 Utilities shall not penetrate beams or columns but may pass through slabs and walls individually, uon. For openings 24" long or less, cut reinforcing and replace alongside opening with splice bars of equivalent area with 48 bar dia. lap. Prepare and submit shop drawings for openings longer than 24". For rectangular openings 12" long or longer, add 1#5 x 6' mid depth diagonal at all 4 corners.

RC-11 Where reinforcing steel congestion permits, conduit and pipes up to 1" diameter may be embedded in concrete per ACI 318, Section 20.6. Space at 3 diameters o.c. Place in the middle third of the slab depth. If conduits are significantly congested, additional reinforcing perpendicular to piping may be required. Requests to embed larger pipes should be accompanied by a detailed description and be submitted to the architect for evaluation. Aluminum conduits shall not be placed in concrete.

RC-12 Provide construction joints in accordance with ACI 318, Section 26.5.6. Provide keyways and adequate dowels. Submit drawings showing location of construction joints and direction of pour for review.

RC-13 Provide 3/4" chamfer for all exposed corners.

RC-14 Provide reinforcing steel installer with a set of Structural Drawings for field reference. Inspect reinforcing steel placing from structural drawings.

PHASE:	DRAWN:	REVIEWED:	DATE:
SCHEMATIC DESIGN			
DESIGN DEVELOPMENT	T. CANNON	C. CHILDERS	12-20-2024
80% CONSTRUCTION DOCS.	T. CANNON	C. CHILDERS	03-21-2025
CONSTRUCTION DOCS.	T. CANNON	C. CHILDERS	05-09-2025

ID:	REVISION:	DRAWN:	REVIEWED:	DATE:
1	Addendum 1			6/3/2025

THESE DRAWINGS AND RENDERINGS ARE INSTRUMENTS OF SERVICE. THE DRAWINGS AND ASSOCIATED COPIES THEREOF , INCLUDING ELECTRONIC MEDIA AND CADD FILES, ARE THE PROPERTY OF ARCHITECTS: LEWIS + WHITLOCK, PA.A. THEIR USE, REPRESENTATION OR REPRODUCTION FOR ANY PURPOSE EXCEPT BY WRITTEN AGREEMENT WITH THE ARCHITECT IS PROHIBITED. THIS COPYRIGHT NOTIFICATION SHALL BE TRUE AS IF DIRECTLY PLACED ON EACH DRAWING EXHIBIT OR RENDERING ON THIS DOCUMENT AND SHALL NOT BE REMOVED FROM THESE DOCUMENTS

Client: Leon County Schools
3420 W. Tharpe St. Suite 100
Tallahassee, Florida 32303

Job Title: Griffin Middle School - Phase 2
800 Alabama St. Tallahassee, FL 32304

Consultant: BLISS & NYITRAY, INC.
STRUCTURAL ENGINEERS
Certificate of Authorization No. 674
227 N Bronough St., Suite 7300
Tallahassee Florida, 32301
T 850-222-4454 F 850-222-9425
www.bniengineers.com

Project #: 23483 / BNI No. 23T22.03
Phase: CONSTRUCTION DOCUMENTS

This item has been digitally signed and sealed by Christopher S. Childers, PE on 6/3/2025. Printed copies of this document are not considered signed and sealed and the signature must be verified on any electronic copies.

CHRISTOPHER S. CHILDERS
LICENSE
NO. 50812
STATE OF
FLORIDA
PROFESSIONAL ENGINEER

Christopher S. Childers, P.E.
Fla. Reg. No. 50812

TO THE BEST OF MY KNOWLEDGE, THE PLANS AND SPECIFICATIONS COMPLY WITH THE APPLICABLE MINIMUM BUILDING CODES.

ALW
Architects Lewis + Whitlock
206 West Virginia St.
Tallahassee, Florida 32301
850,942.1718
www.think3d.net

Description: **STRUCTURAL NOTES**

Sheet No.: **S0.2**

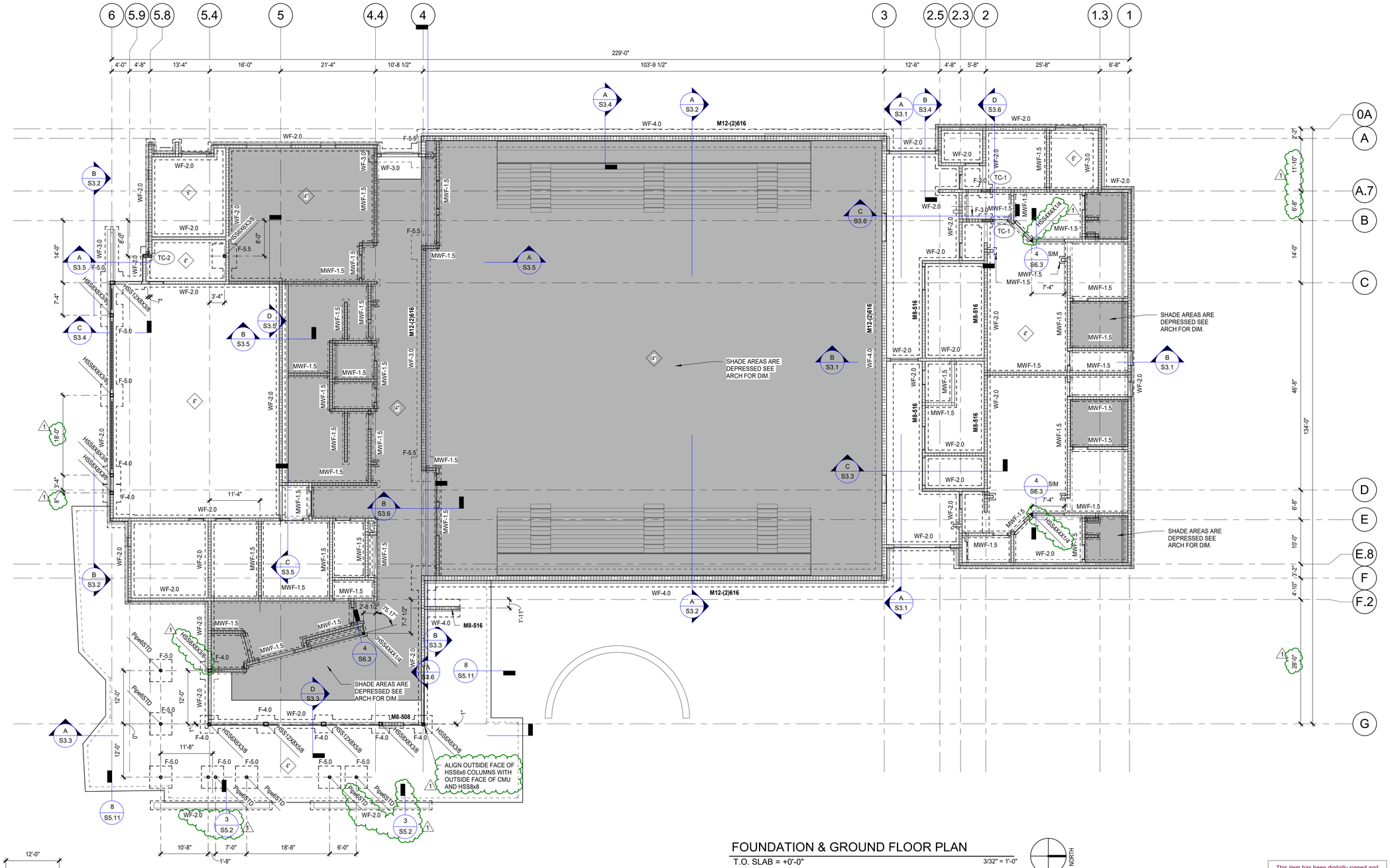

FOUNDATION & GROUND FLOOR PLAN

T.O. SLAB = +0'-0" 3/32" = 1'-0"

NORTH

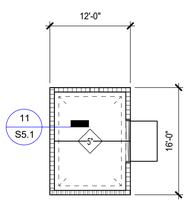

GROUND PLAN - STORAGE BLDG

T.O. SLAB = +0'-0" 3/32" = 1'-0"

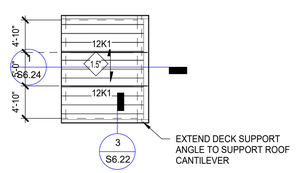

ROOF FRAMING PLAN - STORAGE BLDG

3/32" = 1'-0"

MASONRY REINFORCING NOTES:

M.1 FOR SCHEDULES AND TYPICAL DETAILS SEE SHEETS S521 - S522

M.2 SEE DETAIL 6/S5.21 FOR MASONRY CONTROL JOINTS

M.3 ALL EXTERIOR MASONRY WALLS ARE: M8-524 U.O.N.

M.4 ALL INTERIOR MASONRY WALLS ARE: M8-548 U.O.N.

STORAGE ROOF KEYNOTES:

1.5" 1 1/2" METAL ROOF DECK

SLAB REINFORCING KEYNOTES:

4" DENOTES 4" SLAB ON GRADE REINFORCED WITH 6x6-W2.9xW2.9 WWR ON VAPOR RETARDER OVER WELL COMPACTED SUBGRADE, REFER TO 5/S5.11

5" DENOTES 5" SLAB ON GRADE REINFORCED WITH SINGLE 6x6-W2.9xW2.9 WWR ON VAPOR RETARDER OVER WELL COMPACTED SUBGRADE, REFER TO 5/S5.11

6" DENOTES 6" SLAB ON GRADE REINFORCED WITH DOUBLE 6x6-W2.9xW2.9 WWR ON WELL COMPACTED SUBGRADE, REFER TO 5/S5.11

PLAN NOTES:

1. SEE ARCHITECTURAL DRAWINGS FOR ADDITIONAL INFORMATION AND DIMENSIONS NOT SHOWN.
2. SEE TYPICAL DETAILS AND SCHEDULES

This item has been digitally signed and sealed by Christopher S. Childers, PE on 6/3/2025. Printed copies of this document are not considered signed and sealed and the signature must be verified on any electronic copies.

CHRISTOPHER S. CHILDERS LICENSE NO. 50812 STATE OF FLORIDA PROFESSIONAL ENGINEER

Christopher S. Childers, P.E.
Fla. Reg. No. 50812

TO THE BEST OF MY KNOWLEDGE, THE PLANS AND SPECIFICATIONS COMPLY WITH THE APPLICABLE MINIMUM BUILDING CODES.

PHASE:	DRAWN:	REVIEWED:	DATE:	ID:	REVISION:	DRAWN:	REVIEWED:	DATE:
SCHEMATIC DESIGN								
DESIGN DEVELOPMENT	T. CANNON	C. CHILDERS	12-20-2024	1	Addendum 1			6/3/2025
80% CONSTRUCTION DOCS.	T. CANNON	C. CHILDERS	03-21-2025					
CONSTRUCTION DOCS.	T. CANNON	C. CHILDERS	05-08-2025					

THESE DRAWINGS AND RENDERINGS ARE INSTRUMENTS OF SERVICE. THE DRAWINGS AND ASSOCIATED COPIES THEREOF, INCLUDING ELECTRONIC MEDIA AND CADD FILES, ARE THE PROPERTY OF ARCHITECTS: LEWIS + WHITLOCK, PA & THEIR USE, REPRESENTATION OR REPRODUCTION FOR ANY PURPOSE OTHER THAN THE PROJECT SPECIFIED HEREIN WITHOUT WRITTEN AUTHORIZATION FROM ARCHITECTS IS PROHIBITED. ALL REPRODUCTIONS MUST BE PLACED ON EACH DRAWING EXHIBIT OR RENDERING ON THIS DOCUMENT AND SHALL NOT BE REMOVED FROM THESE DOCUMENTS

Client: Leon County Schools
3420 W. Tharpe St. Suite 100
Tallahassee, Florida 32303

Job Title: Griffin Middle School - Phase 2
800 Alabama St. Tallahassee, FL 32304

Consultant: BLISS & NYITRAY, INC.
STRUCTURAL ENGINEERS
Certificate of Authorization No. 674
227 N Bronough St., Suite 7300
Tallahassee Florida, 32301
T 850-222-4454 F 850-222-9425
www.bnienginieers.com

Project #: 23483 / BNI No. 23T22.03

Phase: CONSTRUCTION DOCUMENTS

ALW

Architects Lewis + Whitlock
206 West Virginia St.
Tallahassee, Florida 32301
850.942.1718
www.think3d.net

Description: FOUNDATION & FIRST FLOOR PLAN

Sheet No.: S1.1

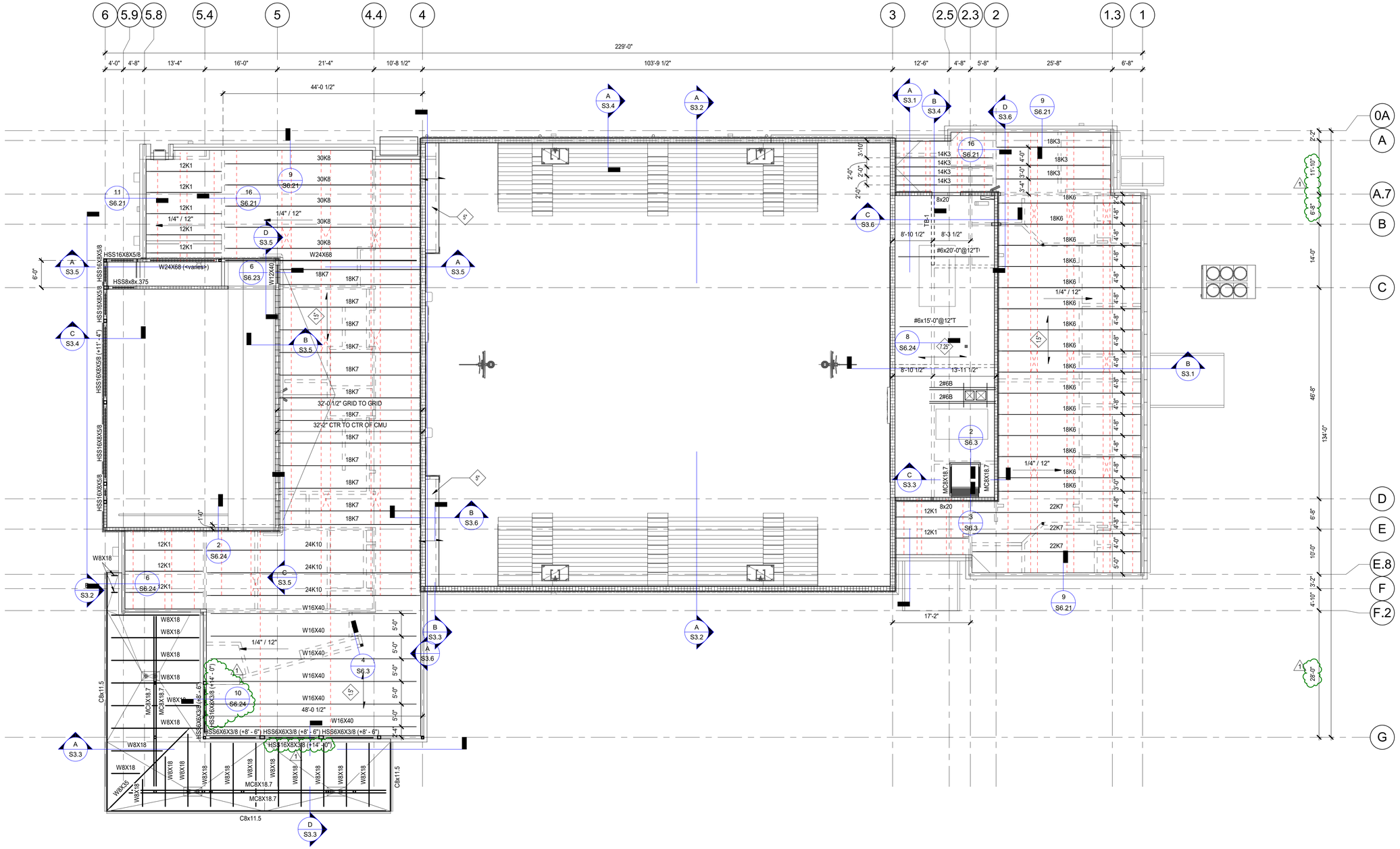

MECH. MEZZANINE/ LOW ROOF FRAMING PLAN

3/32" = 1'-0"

NORTH

PLAN KEYNOTES:

1. ROOFING (SEE ARCHITECTURALS) ON 1 1/2"-20 GA TYPE B GALVANIZED DECK SUPPORTED BY STEEL FRAMING. FOR FASTENING SEE TYPICAL STEEL ROOF DETAILS.
2. TYPICAL BAR JOIST BRIDGING:
   L1 1/2x1 1/2x1/8xCONT. MINIMUM TOP AND BOTTOM CHORD (WELD TO EACH JOIST TOP AND BOTTOM CHORD). PROVIDE ADDITIONAL 'X' BRIDGING L1 1/2x1 1/2x1/8 AS SHOWN MIN. BRIDGING SIZE AND SPACING TO BE VERIFIED BY JOIST MFG ENGINEER TO MEET SYSTEM REQUIREMENTS. JOIST MANUFACTURER TO PROVIDE BRIDGING ADEQUATE FOR JOIST SPACING AND LOADING.
3. TYPICAL JOIST UPLIFT BRIDGING:
   HORIZONTAL L1 1/2x1 1/2x1/8xCONT. AT FIRST BOTTOM CHORD PANEL POINT (WELD 'L' TO EACH JOIST)
4. SEE TYPICAL ROOF OPENING DETAILS ON SHEET S621. SEE ARCH & MEP FOR LOCATION AND SIZE AND ADDITIONAL OPENINGS NOT SHOWN.

SLAB KEYNOTES:

- 1.5" — 1 1/2" METAL ROOF DECK
- 5" — 3" LW CONCRETE ON 2" COMPOSITE METAL DECK
- 7.25" (1) — 4 1/4" LW CONCRETE ON 3"-18GA METAL DECK

This item has been digitally signed and sealed by Christopher S. Childers, PE on 6/3/2025. Printed copies of this document are not considered signed and sealed and the signature must be verified on any electronic copies.

CHRISTOPHER S. CHILDERS — LICENSE — NO. 50812 — STATE OF FLORIDA — PROFESSIONAL ENGINEER

Christopher S. Childers, P.E.
Fla. Reg. No. 50812

TO THE BEST OF MY KNOWLEDGE, THE PLANS AND SPECIFICATIONS COMPLY WITH THE APPLICABLE MINIMUM BUILDING CODES.

PHASE:	DRAWN:	REVIEWED:	DATE:	ID:	REVISION:	DRAWN:	REVIEWED:	DATE:
SCHEMATIC DESIGN	T. CANNON	C. CHILDERS	12-20-2024	1	Addendum 1			6/3/2025
DESIGN DEVELOPMENT	T. CANNON	C. CHILDERS	03-21-2025					
80% CONSTRUCTION DOCS.	T. CANNON	C. CHILDERS	05-08-2025					
CONSTRUCTION DOCS.	T. CANNON	C. CHILDERS						

THESE DRAWINGS AND RENDERINGS ARE INSTRUMENTS OF SERVICE. THE DRAWINGS AND ASSOCIATED COPIES THEREOF, INCLUDING ELECTRONIC MEDIA AND CADD FILES, ARE THE PROPERTY OF ARCHITECTS LEWIS + WHITLOCK, P.A. THEIR USE, REPRESENTATION OR REPRODUCTION FOR ANY PURPOSE EXCEPT PURSUANT TO WRITTEN AGREEMENT WITH ARCHITECTS LEWIS + WHITLOCK, P.A. IS PROHIBITED. NO ORAL DESCRIPTIONS OR RENDERINGS MAY BE RELIED UPON OR PROVIDED TO THIRD PARTIES IF PURPORTEDLY PLACED ON EACH DRAWING EXHIBIT OR RENDERING ON THIS DOCUMENT AND SHALL NOT BE REMOVED FROM THESE DOCUMENTS

Client:
Leon County Schools
3420 W. Tharpe St. Suite 100
Tallahassee, Florida 32303

Job Title:
Griffin Middle School - Phase 2
800 Alabama St. Tallahassee, FL 32304

Consultant:
BLISS & NYITRAY, INC.
STRUCTURAL ENGINEERS
Certificate of Authorization No. 674
227 N Bronough St., Suite 7300
Tallahassee Florida, 32301
T 850-222-4454 F 850-222-9425
www.bnienginers.com

Project #: 23483 / BNI No. 23T22.03
Phase: CONSTRUCTION DOCUMENTS

ALW

Architects Lewis + Whitlock
206 West Virginia St.
Tallahassee, Florida 32301
850.942.1718
www.think3d.net

Description:
MECH. MEZZANINE/LOW ROOF FRAMING PLAN

Sheet No.:
S1.2

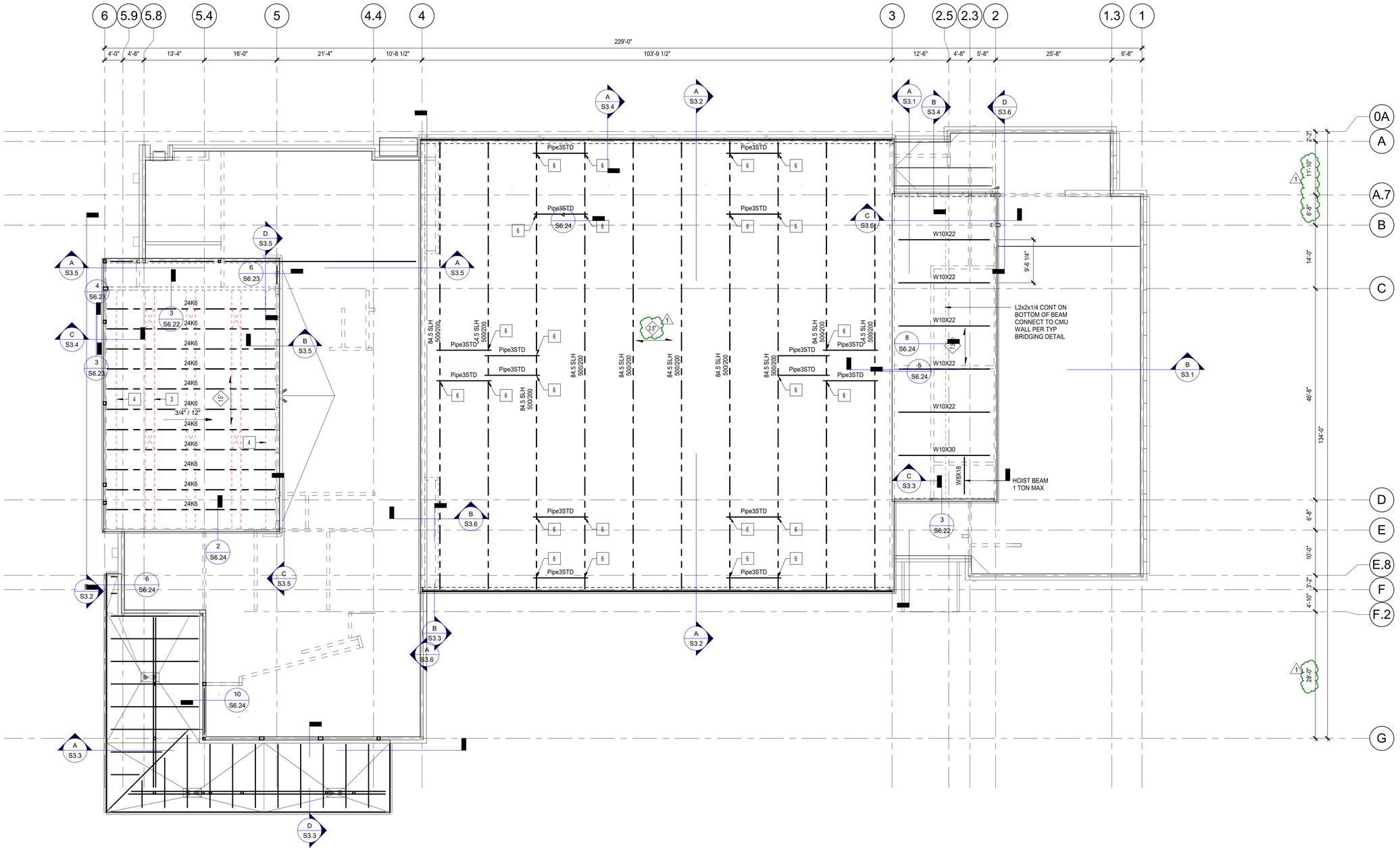

HIGH ROOF FRAMING PLAN

3/32" = 1'-0"

NORTH

PLAN KEYNOTES:

1. ROOFING (SEE ARCHITECTURALS) ON 2 1/2"-20 GA DOVE TAIL ACOUSTIC DECKING (TORIS A OR EQUAL) GALVANIZED DECK SUPPORTED BY STEEL BAR JOISTS. DECK TO BE SHOP PAINTED. CONSTRUCTION MANAGER SHALL SCHEDULE A PRECONSTRUCTION MEETING WITH THE ARCHITECT, OWNER, AND ALL SUBCONTRACTORS ASSOCIATED WITH THE ROOF DECK AND ANY FINISH / SYSTEM EQUIPMENT EXPECTED TO BE INSTALLED OR OTHERWISE ASSOCIATED WITH THE FINISHED CEILING ON THE DINING AREA. THE MEETING SHOULD BE SCHEDULED IN ADVANCE OF THE INSTALLATION OF THE ROOF STRUCTURE. SEQUENCING OF SYSTEMS AND FINISH APPLICATIONS SHALL BE DISCUSSED TO COORDINATE SYSTEMS AND FINISHES ASSOCIATED WITH THE CEILING OF THE DINING AREA TO ACHIEVE THE DESIRED FINAL LEVEL OF FINISH. FOR FASTENING SEE
2. ROOFING (SEE ARCHITECTURALS) ON 1 1/2"-20 GA TYPE B GALVANIZED DECK SUPPORTED BY STEEL FRAMING. FOR FASTENING SEE
3. TYPICAL BAR JOIST BRIDGING:
   L1 1/2x1 1/2x1/8xCONT. MINIMUM TOP AND BOTTOM CHORD (WELD TO EACH JOIST TOP AND BOTTOM CHORD), PROVIDE ADDITION 'X' BRIDGING L1 1/2x1 1/2x1/8 AS SHOWN MIN. BRIDGING SIZE AND SPACING TO BE VERIFIED BY JOIST MFG ENGINEER TO MEET SYSTEM REQUIREMENTS. JOIST MANUFACTURER TO PROVIDE BRIDGING ADEQUATE FOR JOIST SPACING AND LOADING. HIGH ROOF BRIDGING MINIMUM L2 1/2 x 2 1/2 x 1/4 OR LARGER AS NEEDED.
4. TYPICAL JOIST UPLIFT BRIDGING:
   HORIZONTAL L1 1/2x1 1/2x1/8xCONT. AT FIRST BOTTOM CHORD PANEL POINT (WELD 'L' TO EACH JOIST)
5. SEE TYPICAL ROOF OPENING DETAILS ON SHEET S621. SEE ARCH & MEP FOR LOCATION AND SIZE AND ADDITIONAL OPENINGS NOT SHOWN.
6. BASKET BALL GOAL SUPPORTS. TRUSS MANUFACTURER TO ADD A POINT LIVE LOAD OF 1.5 KIP AT EACH POINT. SEE ARCHITECTURAL DRAWINGS FOR GOAL LOCATONS.

SLAB KEYNOTES:

1.5" 1 1/2" METAL ROOF DECK

5" 3" LW CONCRETE ON 2" COMPOSITE METAL DECK

1 2.5" 2 1/2"-18GA DOVE TAIL ACCOUSTIC GALVANIZED AND SHOP PAINTED DECK

This item has been digitally signed and sealed by Christopher S. Childers, PE on 6/3/2025. Printed copies of this document are not considered signed and sealed and the signature must be verified on any electronic copies.

CHRISTOPHER S. CHILDERS LICENSE NO. 50812 STATE OF FLORIDA PROFESSIONAL ENGINEER

Christopher S. Childers, P.E.
Fla. Reg. No. 50812

TO THE BEST OF MY KNOWLEDGE, THE PLANS AND SPECIFICATIONS COMPLY WITH THE APPLICABLE MINIMUM BUILDING CODES.

PHASE:	DRAWN:	REVIEWED:	DATE:	ID:	REVISION:	DRAWN:	REVIEWED:	DATE:
SCHEMATIC DESIGN								
DESIGN DEVELOPMENT	T. CANNON	C. CHILDERS	12-20-2024	1	Addendum 1			6/3/2025
80% CONSTRUCTION DOCS.	T. CANNON	C. CHILDERS	03-21-2025					
CONSTRUCTION DOCS.	T. CANNON	C. CHILDERS	05-08-2025					

THESE DRAWINGS AND RENDERINGS ARE INSTRUMENTS OF SERVICE. THE DRAWINGS AND ASSOCIATED COPIES THEREOF, INCLUDING ELECTRONIC MEDIA AND CADD FILES, ARE THE PROPERTY OF ARCHITECTS LEWIS + WHITLOCK, PA A. THEIR USE, REPRESENTATION OR REPRODUCTION FOR ANY PURPOSE OTHER THAN THAT AUTHORIZED BY ARCHITECTS LEWIS + WHITLOCK, PA IS PROHIBITED. ANY RIGHTS NOT EXPRESSLY GRANTED BY ARCHITECTS LEWIS + WHITLOCK, PA IS PROHIBITED. ANY RIGHTS NOT EXPRESSLY GRANTED BY THESE DOCUMENTS PLACED ON EACH DRAWING EXHIBIT OR RENDERING ON THIS DOCUMENT AND SHALL NOT BE REMOVED FROM THESE DOCUMENTS

Client:
Leon County Schools
3420 W. Tharpe St. Suite 100
Tallahassee, Florida 32303

Job Title:
Griffin Middle School - Phase 2
800 Alabama St. Tallahassee, FL 32304

Consultant:
BLISS & NYITRAY, INC.
STRUCTURAL ENGINEERS
Certificate of Authorization No. 674
227 N Bronough St., Suite 7300
Tallahassee Florida, 32301
T 850-222-4454 F 850-222-9425
www.bnienginieers.com

Project #: 23483 / BNI No. 23T22.03
Phase: CONSTRUCTION DOCUMENTS

ALW
Architects Lewis + Whitlock
206 West Virginia St.
Tallahassee, Florida 32301
850.942.1718
www.think3d.net

Description:
HIGH ROOF FRAMING PLAN

Sheet No.:
S1.3

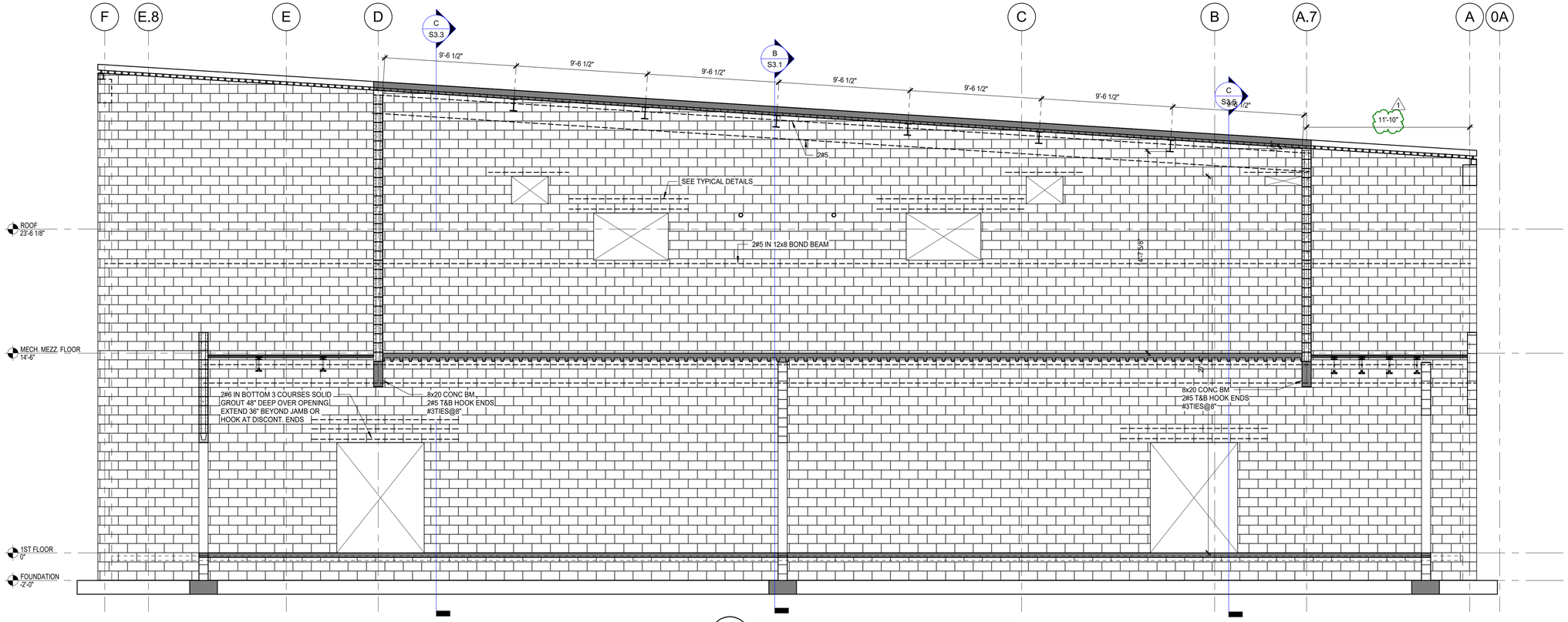

A SECTION THRU MECHANICAL ROOM
AT GRID 3
1/4" = 1'-0"

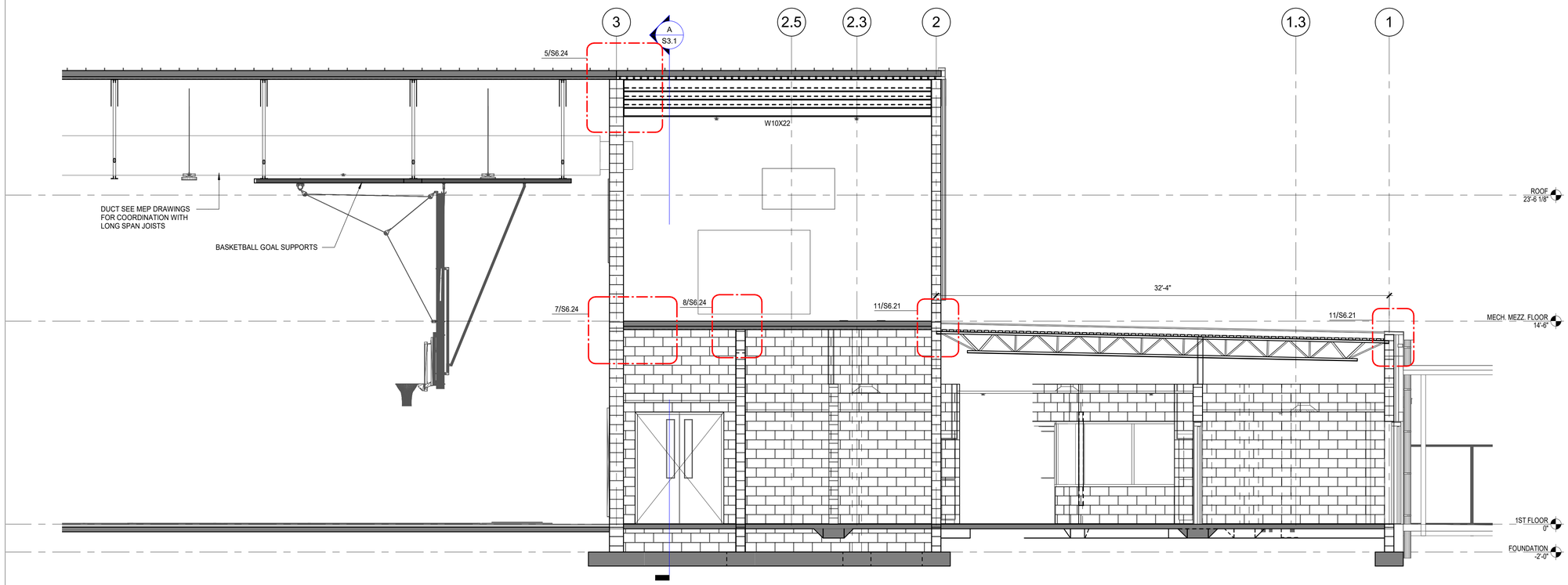

B SECTION THRU MECHANICAL ROOM
1/4" = 1'-0"

This item has been digitally signed and sealed by Christopher S. Childers, PE on 6/3/2025. Printed copies of this document are not considered signed and sealed and the signature must be verified on any electronic copies.

CHRISTOPHER S. CHILDERS LICENSE NO. 50812 STATE OF FLORIDA PROFESSIONAL ENGINEER

Christopher S. Childers, P.E.
Fla. Reg. No. 50812

TO THE BEST OF MY KNOWLEDGE, THE PLANS AND SPECIFICATIONS COMPLY WITH THE APPLICABLE MINIMUM BUILDING CODES.

PHASE:	DRAWN:	REVIEWED:	DATE:	ID:	REVISION:	DRAWN:	REVIEWED:	DATE:
SCHEMATIC DESIGN				1	Addendum 1			6/3/2025
DESIGN DEVELOPMENT	T. CANNON	C. CHILDERS	12-20-2024					
80% CONSTRUCTION DOCS.	T. CANNON	C. CHILDERS	03-21-2025					
CONSTRUCTION DOCS.	T. CANNON	C. CHILDERS	05-09-2025					

THESE DRAWINGS AND RENDERINGS ARE INSTRUMENTS OF SERVICE. THE DRAWINGS AND ASSOCIATED COPIES THEREOF, INCLUDING ELECTRONIC MEDIA AND CADD FILES, ARE THE PROPERTY OF ARCHITECTS LEWIS + WHITLOCK, PLA. THEIR USE, REPRESENTATION OR REPRODUCTION FOR ANY PURPOSE OTHER THAN THOSE SPECIFICALLY AGREED TO BY ARCHITECTS LEWIS + WHITLOCK, PLA IS PROHIBITED. IN ADDITION, ANY ORIGINAL SIGNATURES OR SEALS IF APPLICABLE TO BE PLACED ON EACH DRAWING EXHIBIT OR RENDERING ON THIS DOCUMENT AND SHALL NOT BE REMOVED FROM THESE DOCUMENTS

Client:
Leon County Schools
3420 W. Tharpe St. Suite 100
Tallahassee, Florida 32303

Job Title:
Griffin Middle School - Phase 2
800 Alabama St. Tallahassee, FL 32304

Consultant:
BLISS & NYITRAY, INC.
STRUCTURAL ENGINEERS
Certificate of Authorization No. 674
227 N Bronough St., Suite 7300
Tallahassee Florida, 32301
T 850-222-4454 F 850-222-9425
www.bnieng.com

Project #: 23483 / BNI No. 23T22.03
Phase: CONSTRUCTION DOCUMENTS

ALW

Architects Lewis + Whitlock
206 West Virginia St.
Tallahassee, Florida 32301
850.942.1718
www.think3d.net

Description:
BUILDING / WALL SECTIONS

Sheet No.:
S3.1

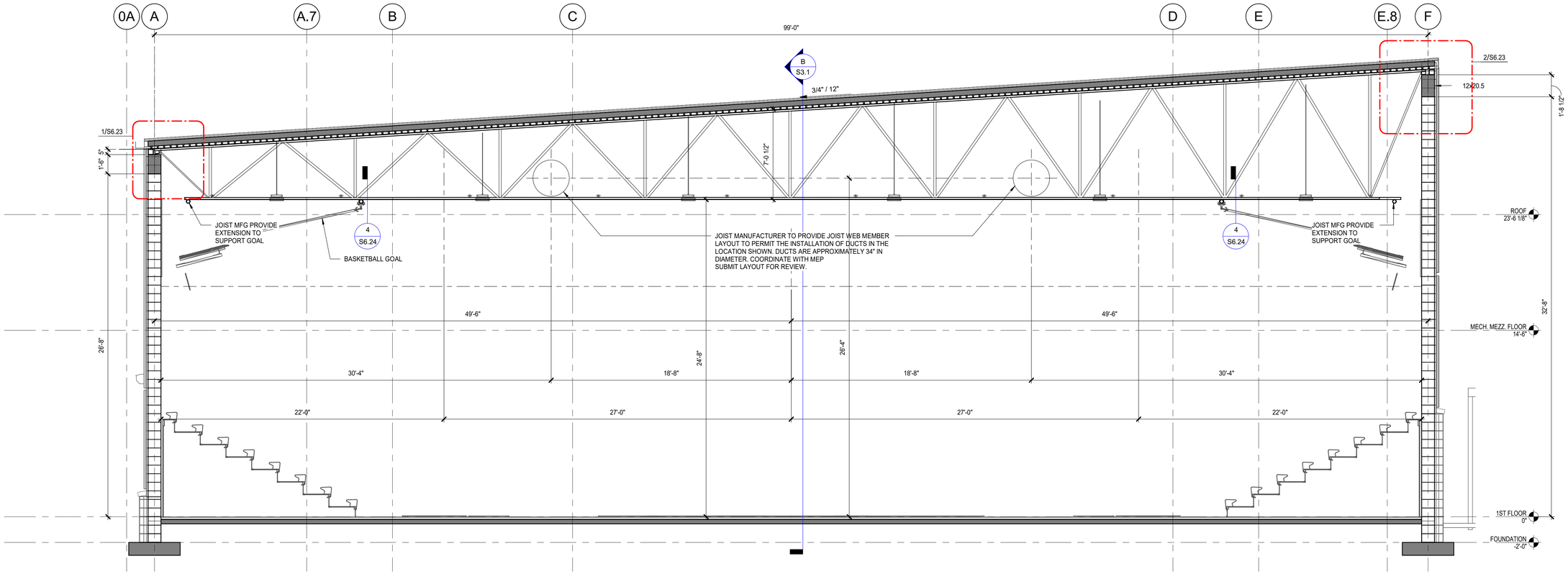

A SECTION THRU GYM

1/4" = 1'-0"

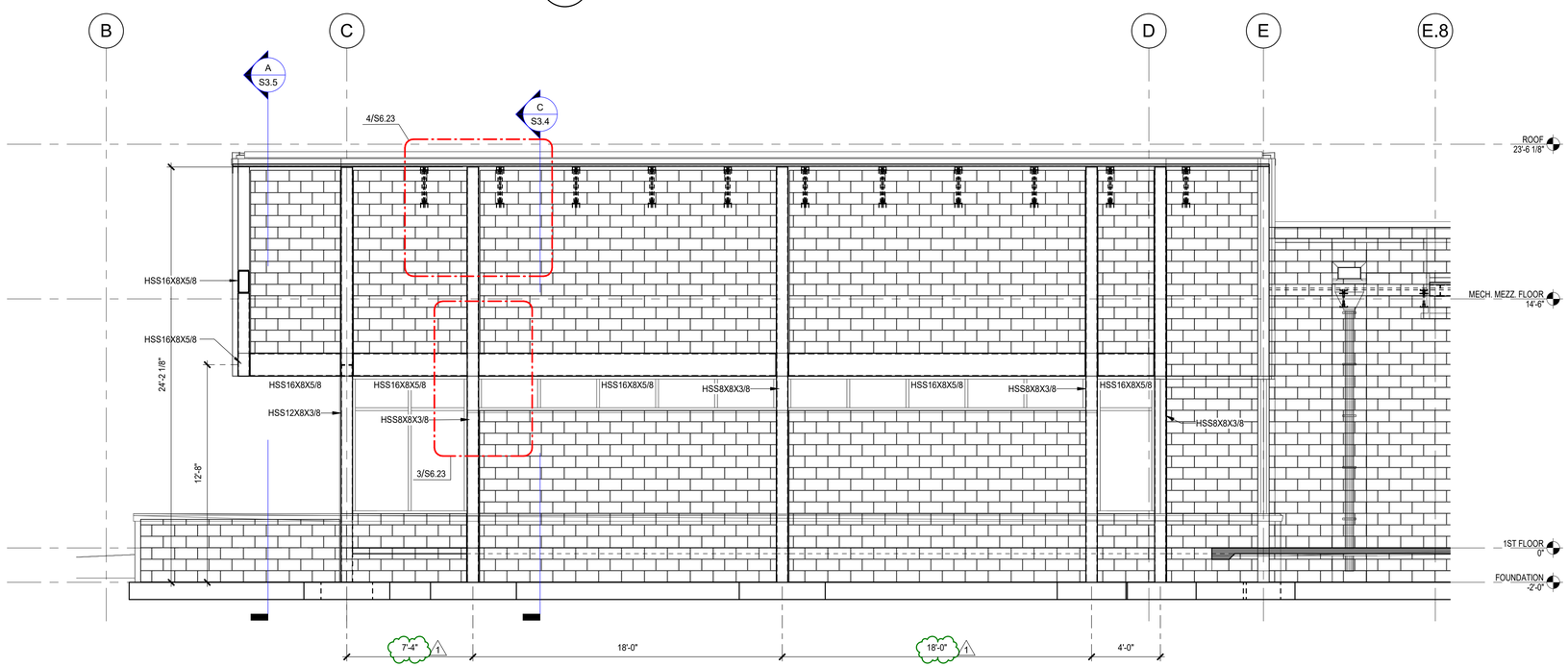

B ELEVATION BAND ROOM SOUTH WALL

1/4" = 1'-0"

PHASE:	DRAWN:	REVIEWED:	DATE:	ID:	REVISION:	DRAWN:	REVIEWED:	DATE:
SCHEMATIC DESIGN								
DESIGN DEVELOPMENT	T. CANNON	C. CHILDERS	12-20-2024	1	Addendum 1			6/3/2025
80% CONSTRUCTION DOCS.	T. CANNON	C. CHILDERS	03-21-2025					
CONSTRUCTION DOCS.	T. CANNON	C. CHILDERS	05-08-2025					

THESE DRAWINGS AND RENDERINGS ARE INSTRUMENTS OF SERVICE. THE DRAWINGS AND ASSOCIATED COPIES THEREOF, INCLUDING ELECTRONIC MEDIA AND CADD FILES, ARE THE PROPERTY OF ARCHITECTS LEWIS + WHITLOCK, PA & THEIR USE, REPRESENTATION OR REPRODUCTION FOR ANY PURPOSE EXCEPT THOSE EXPRESSLY AUTHORIZED BY WRITTEN AGREEMENT WITH THE ARCHITECTS, IS PROHIBITED. ALL RIGHTS ARE RESERVED. IF DIRECTLY PLACED ON EACH DRAWING EXHIBIT OR RENDERING ON THIS DOCUMENT AND SHALL NOT BE REMOVED FROM THESE DOCUMENTS

Client:

Leon County Schools
3420 W. Tharpe St. Suite 100
Tallahassee, Florida 32303

Job Title:

Griffin Middle School - Phase 2
800 Alabama St. Tallahassee, FL 32304

Consultant:

BLISS & NYITRAY, INC.
STRUCTURAL ENGINEERS
Certificate of Authorization No. 674
227 N Bronough St., Suite 7300
Tallahassee Florida, 32301
T 850-222-4454 F 850-222-9425
www.bnlengineers.com

Project #: 23483 / BNI No. 23T22.03

Phase: CONSTRUCTION DOCUMENTS

This item has been digitally signed and sealed by Christopher S. Childers, PE on 6/3/2025. Printed copies of this document are not considered signed and sealed and the signature must be verified on any electronic copies.

CHRISTOPHER S. CHILDERS
LICENSE
NO. 50812
STATE OF FLORIDA
PROFESSIONAL ENGINEER

Christopher S. Childers, P.E.
Fla. Reg. No. 50812

TO THE BEST OF MY KNOWLEDGE, THE PLANS AND SPECIFICATIONS COMPLY WITH THE APPLICABLE MINIMUM BUILDING CODES.

ALW

Architects Lewis + Whitlock
206 West Virginia St.
Tallahassee, Florida 32301
850.942.1718
www.think3d.net

Description:
BUILDING / WALL SECTIONS

Sheet No.:
S3.2

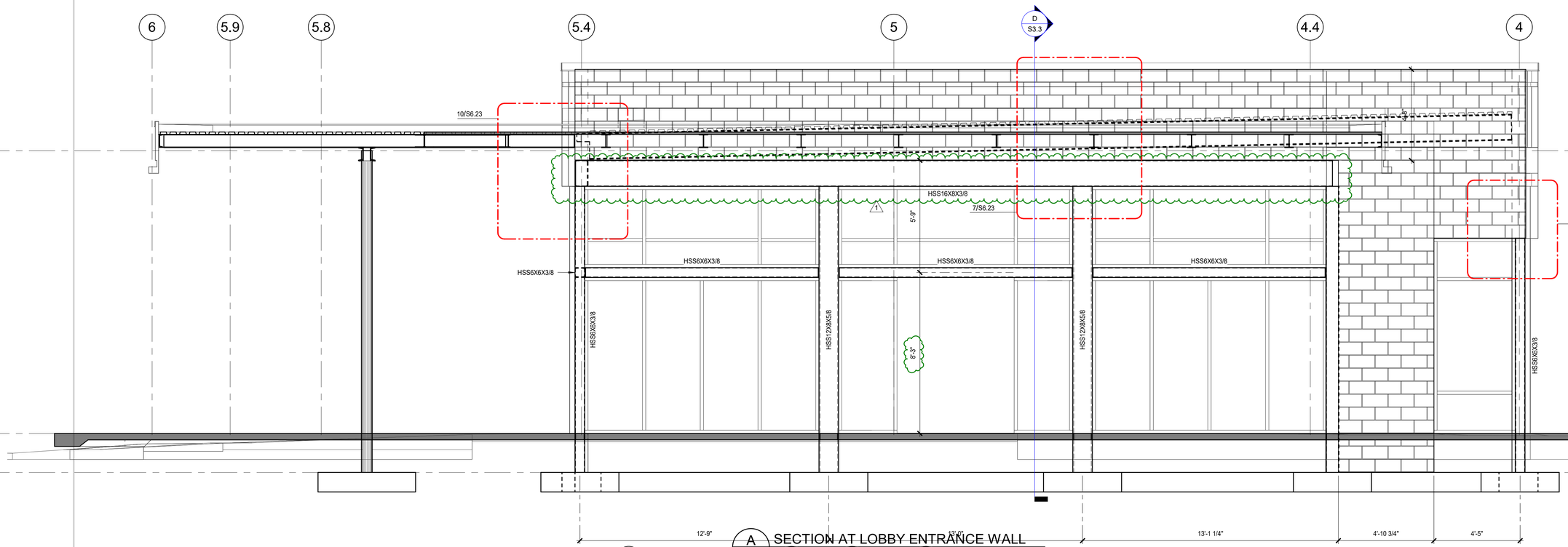

A SECTION AT LOBBY ENTRANCE WALL
3/8" = 1'-0"

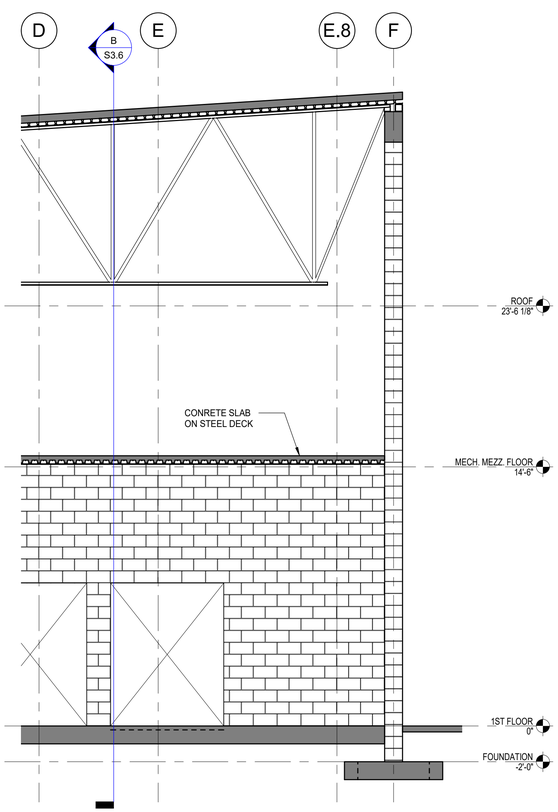

B SECTION AT ENTRY ALCOVE
1/4" = 1'-0"

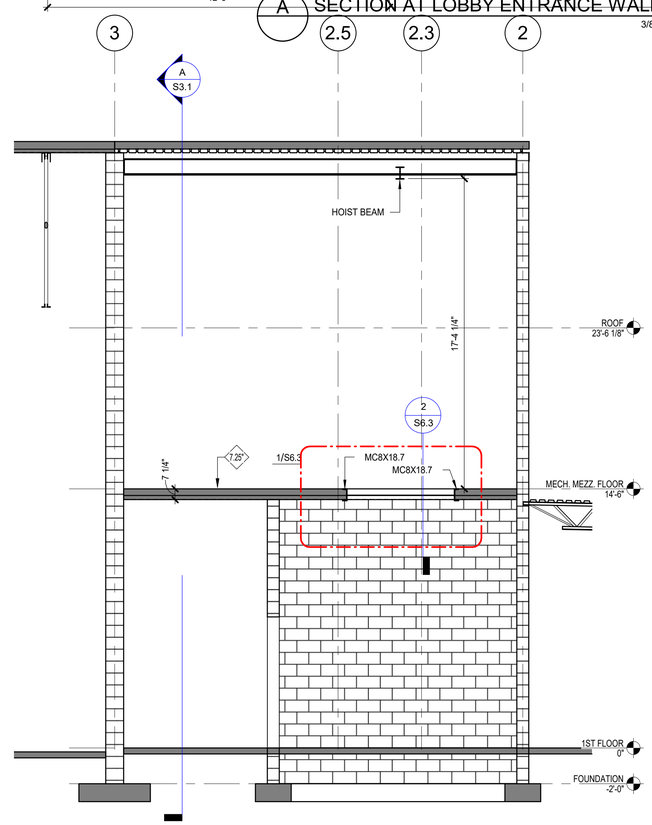

C SECTION THRU MECH MEZZ
1/4" = 1'-0"

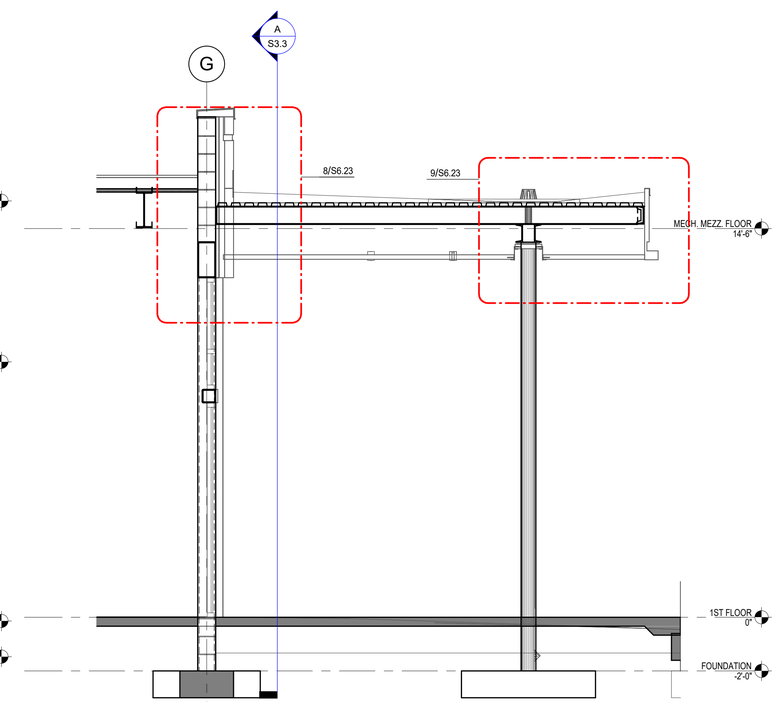

D CANOPY SECTION
3/8" = 1'-0"

PHASE:	DRAWN:	REVIEWED:	DATE:
SCHEMATIC DESIGN			
DESIGN DEVELOPMENT	T. CANNON	C. CHILDERS	12-20-2024
80% CONSTRUCTION DOCS.	T. CANNON	C. CHILDERS	03-21-2025
CONSTRUCTION DOCS.	T. CANNON	C. CHILDERS	05-09-2025

ID:	REVISION:	DRAWN:	REVIEWED:	DATE:
1	Addendum 1			6/3/2025

THESE DRAWINGS AND RENDERINGS ARE INSTRUMENTS OF SERVICE. THE DRAWINGS AND ASSOCIATED COPIES THEREOF, INCLUDING ELECTRONIC MEDIA AND CADD FILES, ARE THE PROPERTY OF ARCHITECTS LEWIS + WHITLOCK, PA & THEIR USE, REPRESENTATION OR REPRODUCTION FOR ANY PURPOSE EXCEPT WHEN PERFORMED IN ACCORDANCE WITH A WRITTEN AGREEMENT WITH ARCHITECTS LEWIS + WHITLOCK, PA IS PROHIBITED. NO ORIGINAL SIGNATURE OR SEAL IS TO BE PLACED ON EACH DRAWING EXHIBIT OR RENDERING ON THIS DOCUMENT AND SHALL NOT BE REMOVED FROM THESE DOCUMENTS

Client: Leon County Schools
3420 W. Tharpe St. Suite 100
Tallahassee, Florida 32303

Job Title: Griffin Middle School - Phase 2
800 Alabama St. Tallahassee, FL 32304

Consultant: BLISS & NYITRAY, INC.
STRUCTURAL ENGINEERS
Certificate of Authorization No. 674
227 N Bronough St., Suite 7300
Tallahassee Florida, 32301
T 850-222-4454 F 850-222-9425
www.bnengineers.com

Project #: 23483 / BNI No. 23T22.03
Phase: CONSTRUCTION DOCUMENTS

This item has been digitally signed and sealed by Christopher S. Childers, PE on 6/3/2025. Printed copies of this document are not considered signed and sealed and the signature must be verified on any electronic copies.

CHRISTOPHER S. CHILDERS
LICENSE
NO. 50812
STATE OF FLORIDA
PROFESSIONAL ENGINEER

Christopher S. Childers, P.E.
Fla. Reg. No. 50812

TO THE BEST OF MY KNOWLEDGE, THE PLANS AND SPECIFICATIONS COMPLY WITH THE APPLICABLE MINIMUM BUILDING CODES.

ALW

Architects Lewis + Whitlock
206 West Virginia St.
Tallahassee, Florida 32301
850.942.1718
www.think3d.net

Description:
BUILDING / WALL SECTIONS

Sheet No.:
S3.3

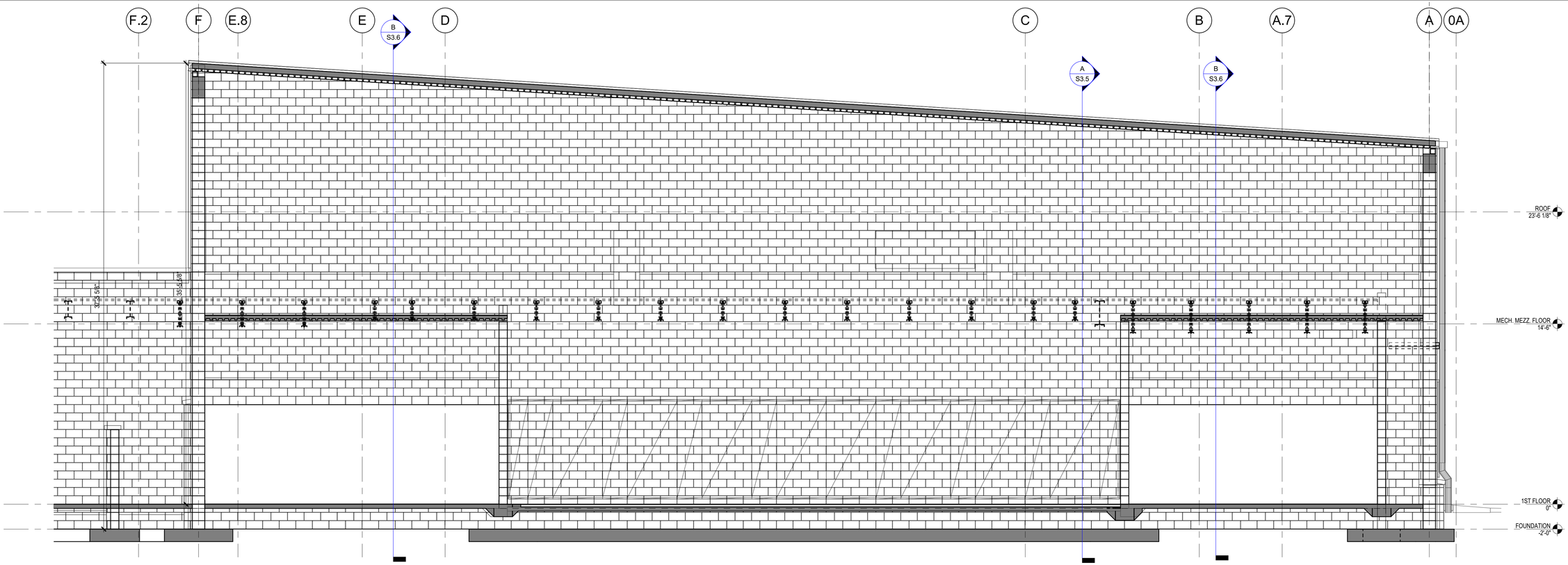

A SECTION AT GYM - GRID 4

1/4" = 1'-0"

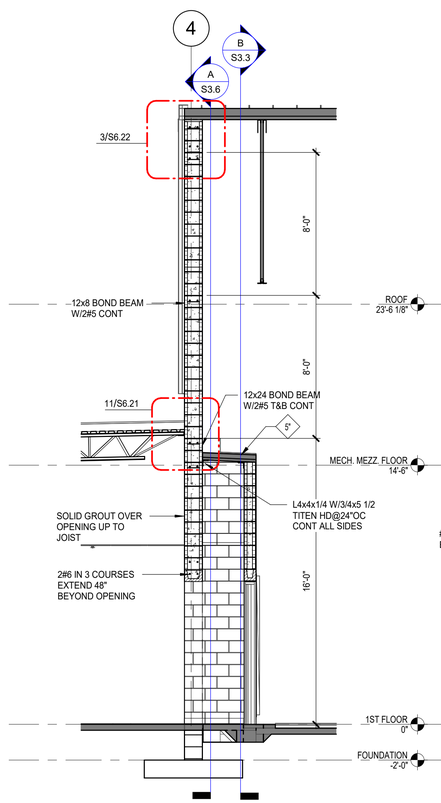

B SECTION SOUTH GYM WALL

1/4" = 1'-0"

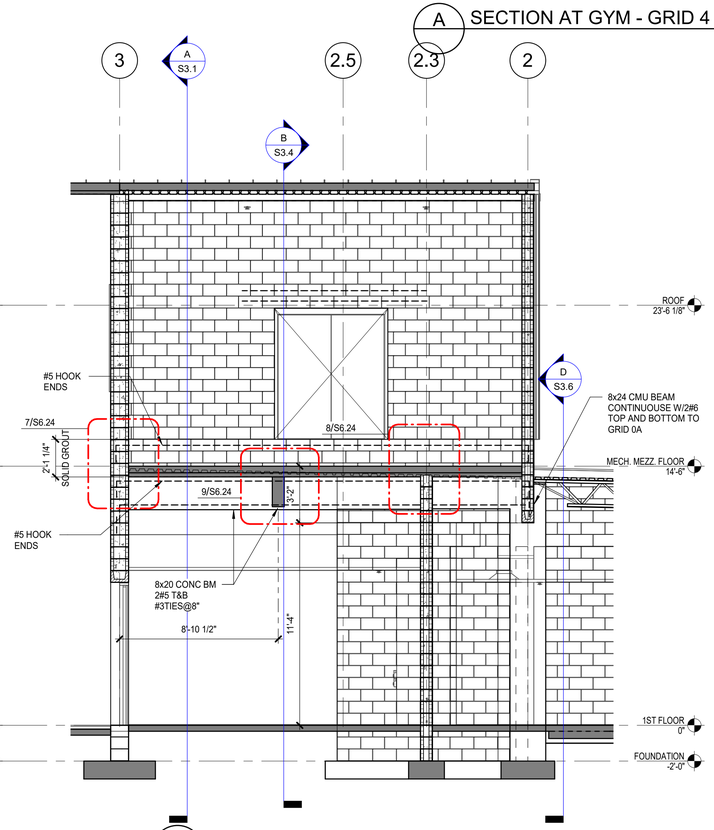

C SECTION

1/4" = 1'-0"

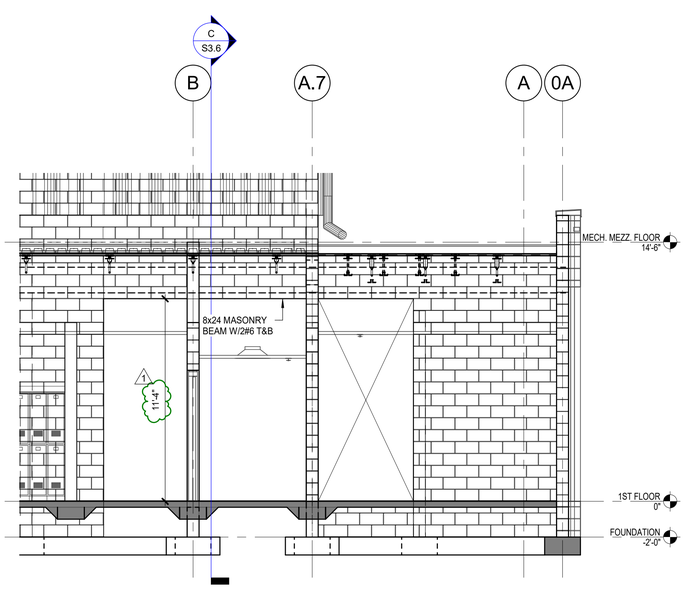

D Section 32

1/4" = 1'-0"

PHASE:	DRAWN:	REVIEWED:	DATE:	ID:	REVISION:	DRAWN:	REVIEWED:	DATE:
SCHEMATIC DESIGN								
DESIGN DEVELOPMENT	T. CANNON	C. CHILDERS	12-20-2024	1	Addendum 1			6/3/2025
80% CONSTRUCTION DOCS.	T. CANNON	C. CHILDERS	03-21-2025					
CONSTRUCTION DOCS.	T. CANNON	C. CHILDERS	05-09-2025					

THESE DRAWINGS AND RENDERINGS ARE INSTRUMENTS OF SERVICE. THE DRAWINGS AND ASSOCIATED COPIES THEREOF, INCLUDING ELECTRONIC MEDIA AND CADD FILES, ARE THE PROPERTY OF ARCHITECTS LEWIS + WHITLOCK, P.A. & THEIR USE, REPRESENTATION OR REPRODUCTION FOR ANY PURPOSE OTHER THAN FOR THE PROJECT SPECIFIED HEREIN IS PROHIBITED WITHOUT THE WRITTEN CONSENT OF ARCHITECTS LEWIS + WHITLOCK, P.A. THESE DRAWINGS OR RENDERINGS MAY NOT BE REPRODUCED OR PLACED ON EACH DRAWING EXHIBIT OR RENDERING ON THIS DOCUMENT AND SHALL NOT BE REMOVED FROM THESE DOCUMENTS

Client: Leon County Schools
3420 W. Tharpe St. Suite 100
Tallahassee, Florida 32303

Job Title: Griffin Middle School - Phase 2
800 Alabama St. Tallahassee, FL 32304

Consultant: BLISS & NYITRAY, INC.
STRUCTURAL ENGINEERS
Certificate of Authorization No. 674
227 N Bronough St. Suite 7300
Tallahassee Florida, 32301
T 850-222-4454 F 850-222-9425
www.bnengineers.com

Project #: 23483 / BNI No. 23722.03
Phase: CONSTRUCTION DOCUMENTS

This item has been digitally signed and sealed by Christopher S. Childers, PE on 6/3/2025. Printed copies of this document are not considered signed and sealed and the signature must be verified on any electronic copies.

CHRISTOPHER S. CHILDERS LICENSE NO. 50812 STATE OF FLORIDA PROFESSIONAL ENGINEER

Christopher S. Childers, P.E.
Fla. Reg. No. 50812

TO THE BEST OF MY KNOWLEDGE, THE PLANS AND SPECIFICATIONS COMPLY WITH THE APPLICABLE MINIMUM BUILDING CODES.

ALW

Architects Lewis + Whitlock
206 West Virginia St.
Tallahassee, Florida 32301
850.942.1718
www.think3d.net

Description:
BUILDING / WALL SECTIONS

Sheet No.:
S3.6

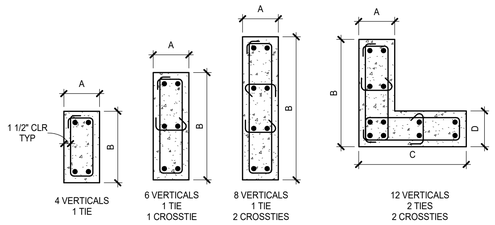

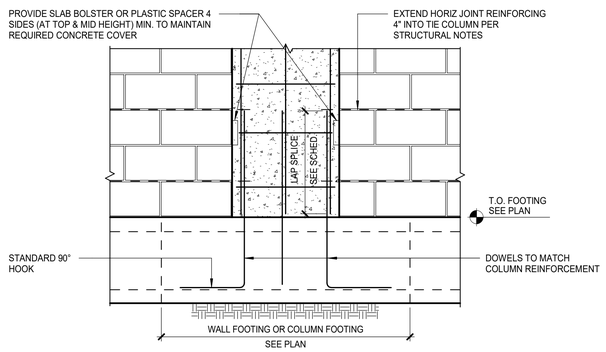

1 TYPICAL TIE COLUMN DETAIL

3/4" = 1'-0"

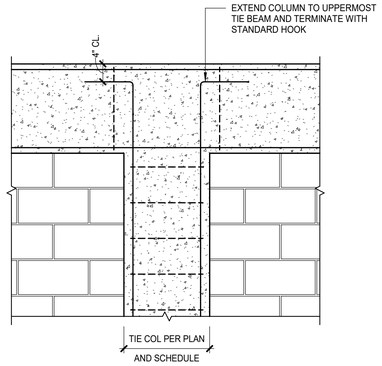

2 TYPICAL TIE COLUMN TERMINATION
AT TIE BEAM

3/4" = 1'-0"

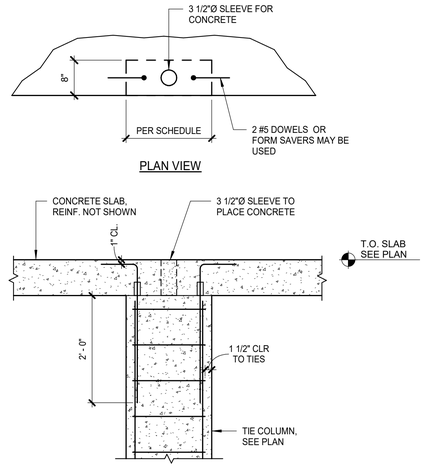

3 TYPICAL TIE COLUMN TERMINATION
AT CONCRETE SLAB

3/4" = 1'-0"

TIE BEAM SCHEDULE

TYPE	ELEV. TOP OF BEAM	SIZE "b"x"d"	REINFORCING			STIRRUPS		REMARKS
			BOT. CONT.	TOP CONT.	MID. CONT.	SIZE	SPACING EACH END	
TB-1	13'-10 3/4"	8"x20"	2#5	2#5		#3	8"	HOOK ENDS

TIE COLUMN SCHEDULE

TYPE	SIZE AxB	SIZE AxBxCxD	REINFORCING			REMARKS
			VERTICAL	TIES	CROSSTIES	
TC-1	8"x24"		6#6	#3@8"	#3	
TC-2	8"x22"		4#6	#3@8"	#3	

PHASE:	DRAWN:	REVIEWED:	DATE:	ID:	REVISION:	DRAWN:	REVIEWED:	DATE:
SCHEMATIC DESIGN				1	Addendum 1			6/3/2025
DESIGN DEVELOPMENT	T. CANNON	C. CHILDERS	12-20-2024					
80% CONSTRUCTION DOCS.	T. CANNON	C. CHILDERS	03-21-2025					
CONSTRUCTION DOCS.	T. CANNON	C. CHILDERS	05-08-2025					

THESE DRAWINGS AND RENDERINGS ARE INSTRUMENTS OF SERVICE. THE DRAWINGS AND ASSOCIATED COPIES THEREOF, INCLUDING ELECTRONIC MEDIA AND CADD FILES, ARE THE PROPERTY OF ARCHITECTS LEWIS + WHITLOCK, P.A. THEIR USE, REPRESENTATION OR REPRODUCTION FOR ANY PURPOSE OTHER THAN THE PROJECT SPECIFIED HEREIN WITHOUT THE WRITTEN AUTHORIZATION OF ARCHITECTS LEWIS + WHITLOCK IS PROHIBITED. ANY REPRODUCTION OR REPRODUCTION FOR ANY PURPOSE OTHER THAN THE PROJECT SPECIFIED HEREIN WITHOUT THE WRITTEN AUTHORIZATION OF ARCHITECTS LEWIS + WHITLOCK IS PROHIBITED. ANY REPRODUCTION OR REPRODUCTION FOR ANY PURPOSE OTHER THAN THE PROJECT SPECIFIED HEREIN IS PROHIBITED. ARCHITECTS LEWIS + WHITLOCK IS NOT RESPONSIBLE FOR ANY CHANGES MADE TO THESE DOCUMENTS IF PLACED ON EACH DRAWING EXHIBIT OR RENDERING ON THIS DOCUMENT AND SHALL NOT BE REMOVED FROM THESE DOCUMENTS

Client:
Leon County Schools
3420 W. Tharpe St. Suite 100
Tallahassee, Florida 32303

Job Title:
Griffin Middle School - Phase 2
800 Alabama St. Tallahassee, FL 32304

Consultant:
BLISS & NYITRAY, INC.
STRUCTURAL ENGINEERS
Certificate of Authorization No. 674
227 N Bronough St., Suite 7300
Tallahassee Florida, 32301
T 850-222-4454 F 850-222-9425
www.bnengineers.com

Project #: 23483 / BNI No. 23T22.03
Phase: CONSTRUCTION DOCUMENTS

This item has been digitally signed and sealed by Christopher S. Childers, PE on 6/3/2025. Printed copies of this document are not considered signed and sealed and the signature must be verified on any electronic copies.

CHRISTOPHER S. CHILDERS
LICENSE
NO. 50812
STATE OF FLORIDA
PROFESSIONAL ENGINEER

Christopher S. Childers, P.E.
Fla. Reg. No. 50812

TO THE BEST OF MY KNOWLEDGE, THE PLANS AND SPECIFICATIONS COMPLY WITH THE APPLICABLE MINIMUM BUILDING CODES.

ALW

Architects Lewis + Whitlock
206 West Virginia St.
Tallahassee, Florida 32301
850.942.1718
www.think3d.net

Description:
TYPICAL SCHEDULES

Sheet No.:
S4.3

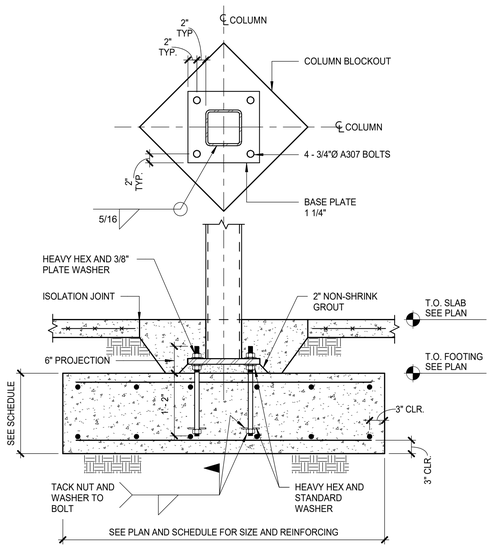

1 TUBE COLUMN/FOOTING DETAIL

3/4" = 1'-0"

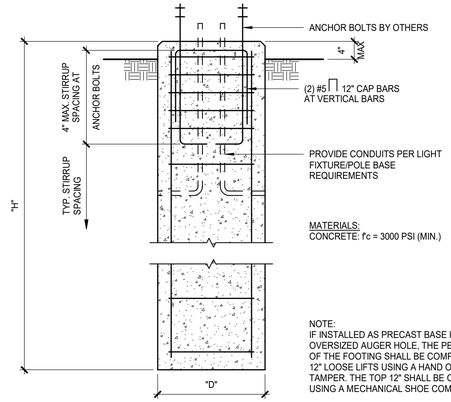

MATERIALS:
CONCRETE: fc = 3000 PSI (MIN.)

NOTE:
IF INSTALLED AS PRECAST BASE IN AN OVERSIZED AUGER HOLE, THE PERIMETER OF THE FOOTING SHALL BE COMPACTED IN 12" LOOSE LIFTS USING A HAND OPERATED TAMPER. THE TOP 12" SHALL BE COMPACTED USING A MECHANICAL SHOE COMPACTOR.

MAXIMUM POLE HEIGHT	"H"	"D"	VERTICAL REINFORCING	STIRRUPS
40 FT.	84"	30"Ø	6 #7	#3 @12" O.C.
30 FT.	76"	24"Ø	6 #6	#3 @12" O.C.
14 FT.	48"	16"x16"	4 #5	#3 @8" O.C.
12 FT.	48"	16"x16"	4 #5	#3 @8" O.C.

2 LIGHT POLE BASE DETAIL

3/4" = 1'-0"

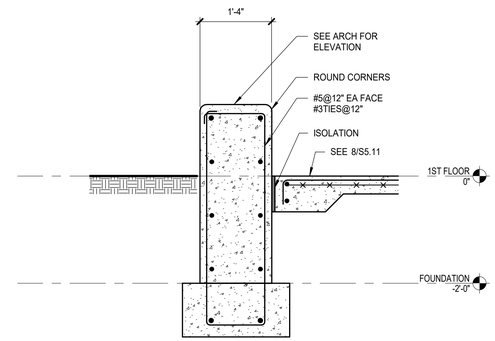

1 3 SEATING WALL

3/4" = 1'-0"

PHASE:	DRAWN:	REVIEWED:	DATE:	ID:	REVISION:	DRAWN:	REVIEWED:	DATE:
SCHEMATIC DESIGN								
DESIGN DEVELOPMENT	T. CANNON	C. CHILDERS	12-20-2024	1	Addendum 1			6/3/2025
80% CONSTRUCTION DOCS.	T. CANNON	C. CHILDERS	03-21-2025					
CONSTRUCTION DOCS.	T. CANNON	C. CHILDERS	05-08-2025					

THESE DRAWINGS AND RENDERINGS ARE INSTRUMENTS OF SERVICE. THE DRAWINGS AND ASSOCIATED COPIES THEREOF, INCLUDING ELECTRONIC MEDIA AND CADD FILES, ARE THE PROPERTY OF ARCHITECTS LEWIS + WHITLOCK, PLA. THEIR USE, REPRESENTATION OR REPRODUCTION FOR ANY PURPOSE OTHER THAN THE PROJECT SPECIFIED HEREIN IS PROHIBITED. ANY REPRODUCTION, IF PERMITTED, SHALL BE TREATED AS IF DIRECTLY PLACED ON EACH DRAWING EXHIBIT OR RENDERING ON THIS DOCUMENT AND SHALL NOT BE REMOVED FROM THESE DOCUMENTS

Client:
Leon County Schools
3420 W. Tharpe St. Suite 100
Tallahassee, Florida 32303

Job Title:
Griffin Middle School - Phase 2
800 Alabama St. Tallahassee, FL 32304

Consultant:
BLISS & NYITRAY, INC.
STRUCTURAL ENGINEERS
Certificate of Authorization No. 674
227 N Bronough St., Suite 7300
Tallahassee Florida, 32301
T 850-222-4454 F 850-222-9425
www.bnlengineers.com

Project #: 23483 / BNI No. 23T22.03
Phase: CONSTRUCTION DOCUMENTS

This item has been digitally signed and sealed by Christopher S. Childers, PE on 6/3/2025. Printed copies of this document are not considered signed and sealed and the signature must be verified on any electronic copies.

CHRISTOPHER S. CHILDERS LICENSE NO. 50812 STATE OF FLORIDA PROFESSIONAL ENGINEER

Christopher S. Childers, P.E.
Fla. Reg. No. 50812

TO THE BEST OF MY KNOWLEDGE, THE PLANS AND SPECIFICATIONS COMPLY WITH THE APPLICABLE MINIMUM BUILDING CODES.

ALW

Architects Lewis + Whitlock
206 West Virginia St.
Tallahassee, Florida 32301
850.942.1718
www.think3d.net

Description:
TYPICAL FOUNDATION DETAILS

Sheet No.:
S5.2

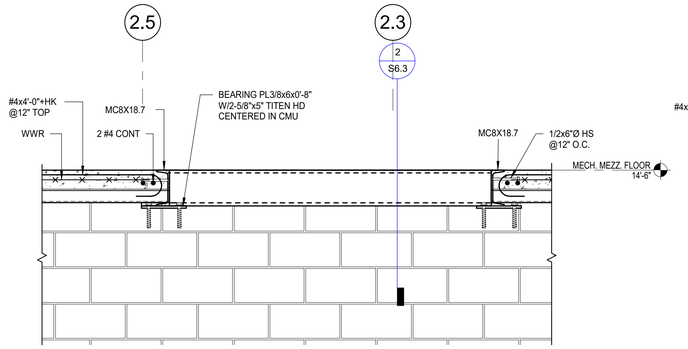

1 SECTION MECH ROOM LADDER OPENING

3/4" = 1'-0"

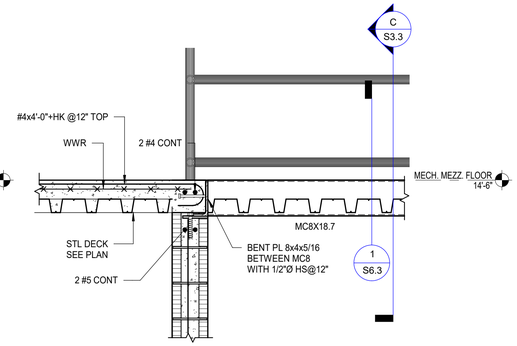

2 SECTION MECH ROOM LADDER OPENING

3/4" = 1'-0"

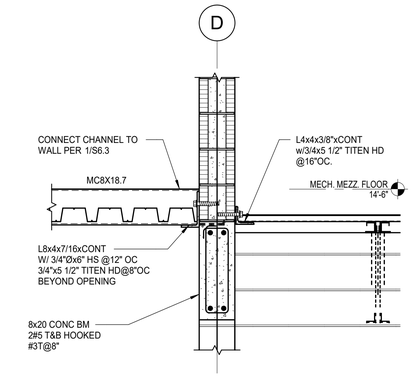

3 SECTION MECH ROOM EXTERIOR WALL

3/4" = 1'-0"

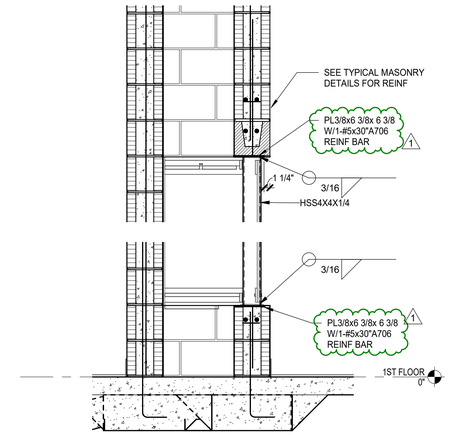

4 LOBBY TROPHY CASE SUPPORT POST

3/4" = 1'-0"

PHASE:	DRAWN:	REVIEWED:	DATE:	ID:	REVISION:	DRAWN:	REVIEWED:	DATE:
SCHEMATIC DESIGN				1	Addendum 1			6/3/2025
DESIGN DEVELOPMENT	T. CANNON	C. CHILDERS	12-20-2024					
80% CONSTRUCTION DOCS.	T. CANNON	C. CHILDERS	03-21-2025					
CONSTRUCTION DOCS.	T. CANNON	C. CHILDERS	05-08-2025					

THESE DRAWINGS AND RENDERINGS ARE INSTRUMENTS OF SERVICE. THE DRAWINGS AND ASSOCIATED COPIES THEREOF, INCLUDING ELECTRONIC MEDIA AND CADD FILES, ARE THE PROPERTY OF ARCHITECTS LEWIS + WHITLOCK, P.A. THEIR USE, REPRESENTATION OR REPRODUCTION FOR ANY PURPOSE OTHER THAN THE SPECIFIC PROJECT FOR WHICH THEY WERE PREPARED IS PROHIBITED WITHOUT THE WRITTEN CONSENT OF ARCHITECTS. IF SUBMITTED, THIS NOTICE MUST BE PLACED ON EACH DRAWING EXHIBIT OR RENDERING ON THIS DOCUMENT AND SHALL NOT BE REMOVED FROM THESE DOCUMENTS

Client:

Leon County Schools
3420 W. Tharpe St. Suite 100
Tallahassee, Florida 32303

Job Title:

Griffin Middle School - Phase 2
800 Alabama St. Tallahassee, FL 32304

Consultant:

BLISS & NYITRAY, INC.
STRUCTURAL ENGINEERS
Certificate of Authorization No. 674
227 N Bronough St., Suite 7300
Tallahassee Florida, 32301
T 850-222-4454 F 850-222-9425
www.bnlengineers.com

Project #: 23483 / BNI No. 23T22.03

Phase: CONSTRUCTION DOCUMENTS

This item has been digitally signed and sealed by Christopher S. Childers, PE on 6/3/2025. Printed copies of this document are not considered signed and sealed and the signature must be verified on any electronic copies.

CHRISTOPHER S. CHILDERS
LICENSE
NO. 50812
STATE OF FLORIDA
PROFESSIONAL ENGINEER

Christopher S. Childers, P.E.
Fla. Reg. No. 50812

TO THE BEST OF MY KNOWLEDGE, THE PLANS AND SPECIFICATIONS COMPLY WITH THE APPLICABLE MINIMUM BUILDING CODES.

ALW

Architects Lewis + Whitlock
206 West Virginia St.
Tallahassee, Florida 32301
850.942.1718
www.think3d.net

Description:
STEEL DETAILS

Sheet No.:
S6.3

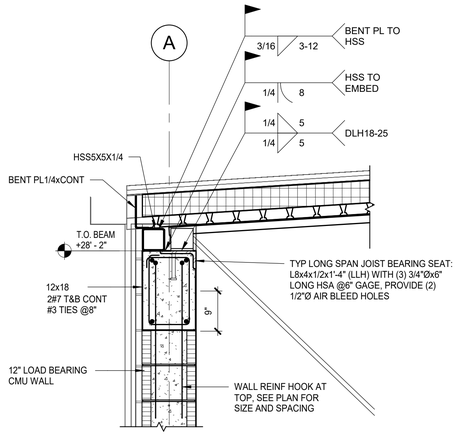

1 LONG SPAN TRUSS TO WALL

3/4" = 1'-0"

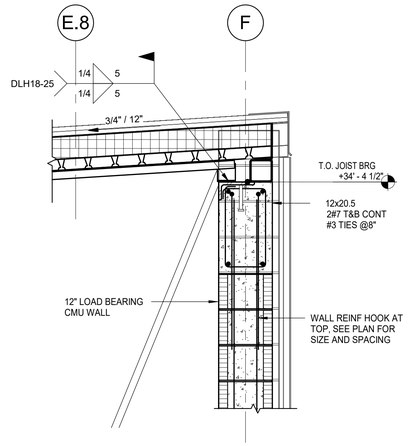

2 SECTION AT GYM ROOF

3/4" = 1'-0"

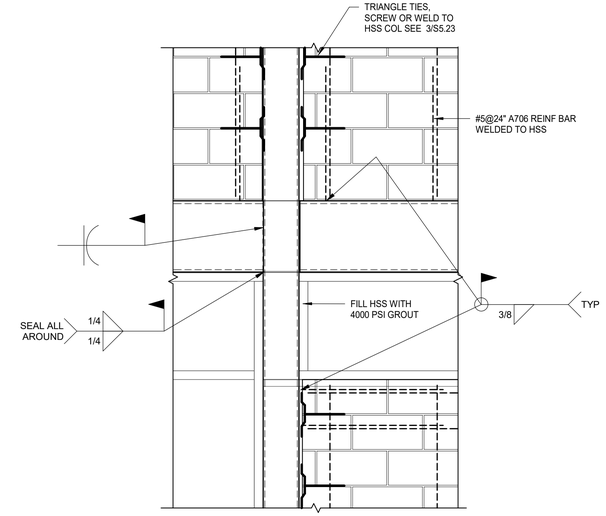

3 TYPICAL HSS BEAM AND COLUMN CONNECTION TO CMU WALL

3/4" = 1'-0"

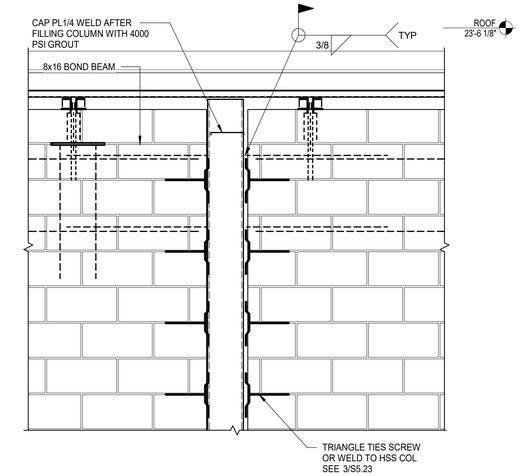

4 HSS AT TOP OF WALL

3/4" = 1'-0"

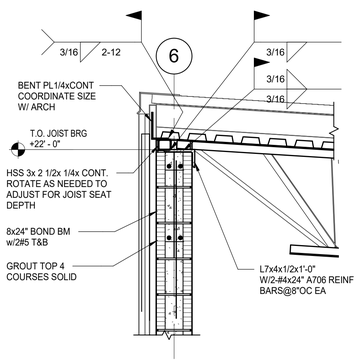

5 JOIST TO WALL AT BAND ROOM

3/4" = 1'-0"

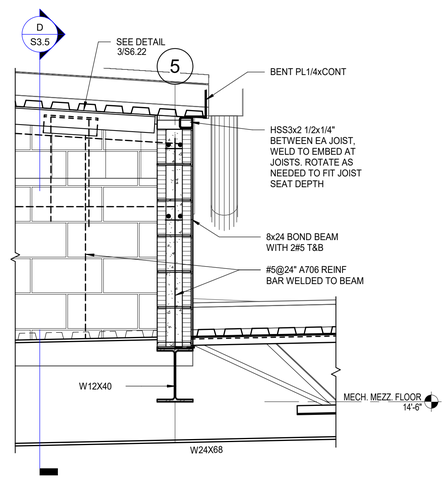

6 SECTION AT ROOF

3/4" = 1'-0"

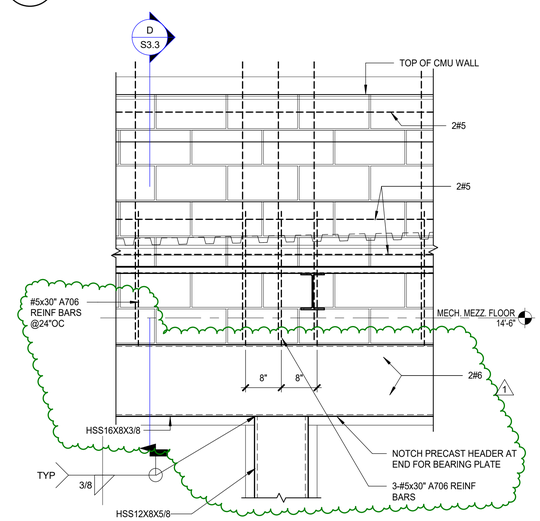

7 COLUMN TO WALL CONNECTION AT LOBBY

3/4" = 1'-0"

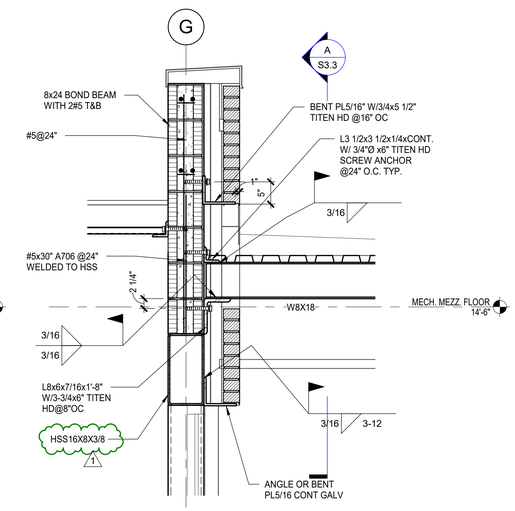

8 SECTION AT LOBBY WALL

3/4" = 1'-0"

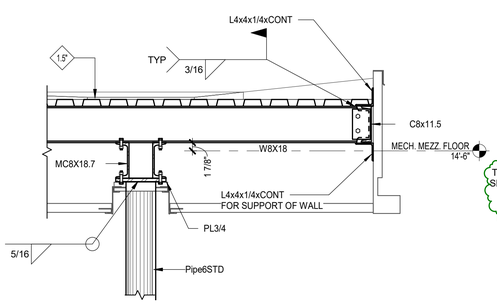

9 CANOPY EDGE AND COLUMN CONNECTION TYPICAL

3/4" = 1'-0"

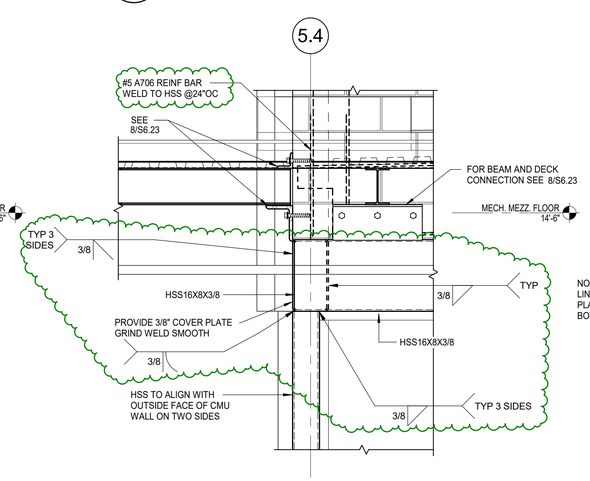

10 WALL CORNER SUPPORT

3/4" = 1'-0"

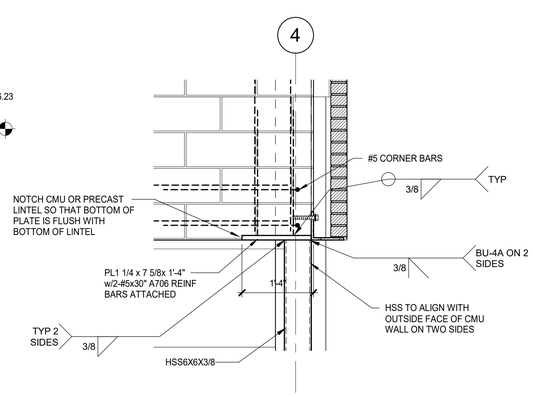

11 WALL CORNER SUPPORT

3/4" = 1'-0"

PHASE:	DRAWN:	REVIEWED:	DATE:	ID:	REVISION:	DRAWN:	REVIEWED:	DATE:
SCHEMATIC DESIGN								
DESIGN DEVELOPMENT	T. CANNON	C. CHILDERS	12-20-2024	1	Addendum 1			6/3/2025
80% CONSTRUCTION DOCS.	T. CANNON	C. CHILDERS	03-21-2025					
CONSTRUCTION DOCS.	T. CANNON	C. CHILDERS	05-08-2025					

THESE DRAWINGS AND RENDERINGS ARE INSTRUMENTS OF SERVICE. THE DRAWINGS AND ASSOCIATED COPIES THEREOF, INCLUDING ELECTRONIC MEDIA CADD FILES, ARE THE PROPERTY OF ARCHITECTS LEWIS + WHITLOCK, PLA. THEIR USE, REPRESENTATION OR REPRODUCTION FOR ANY PURPOSE NOT SPECIFICALLY AGREED TO IN WRITING BY ARCHITECTS LEWIS + WHITLOCK, PLA. IS PROHIBITED. THIS LEGEND MUST BE PLACED ON EACH DRAWING EXHIBIT OR RENDERING ON THIS DOCUMENT AND SHALL NOT BE REMOVED FROM THESE DOCUMENTS

Client: Leon County Schools
3420 W. Tharpe St. Suite 100
Tallahassee, Florida 32303

Job Title: Griffin Middle School - Phase 2
800 Alabama St. Tallahassee, FL 32304

Consultant: BLISS & NYITRAY, INC.
STRUCTURAL ENGINEERS
Certificate of Authorization No. 674
227 N Bronough St., Suite 7300
Tallahassee Florida, 32301
T 850-222-4454 F 850-222-9425
www.bnienginees.com

Project #: 23483 / BNI No. 23T22.03
Phase: CONSTRUCTION DOCUMENTS

ALW

Architects Lewis + Whitlock
206 West Virginia St.
Tallahassee, Florida 32301
850.942.1718
www.think3d.net

Description:
TYPICAL STEEL ROOF DETAILS

Sheet No.:
S6.23

This item has been digitally signed and sealed by Christopher S. Childers, PE on 6/3/2025. Printed copies of this document are not considered signed and sealed and the signature must be verified on any electronic copies.

CHRISTOPHER S. CHILDERS LICENSE NO. 50812 STATE OF FLORIDA PROFESSIONAL ENGINEER

Christopher S. Childers, P.E.
Fla. Reg. No. 50812

TO THE BEST OF MY KNOWLEDGE, THE PLANS AND SPECIFICATIONS COMPLY WITH THE APPLICABLE MINIMUM BUILDING CODES.

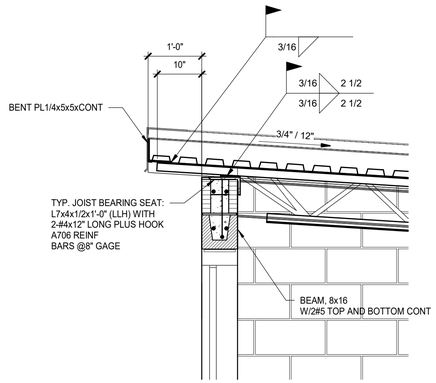

1 SECTION AT ROOF

3/4" = 1'-0"

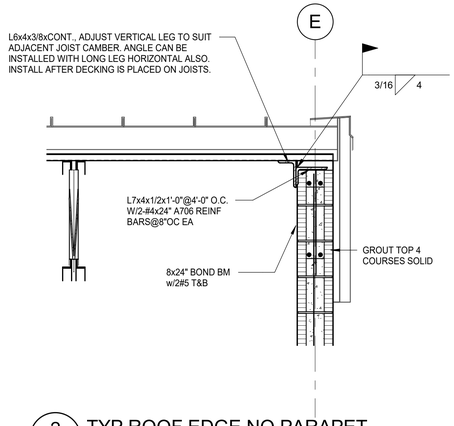

2 TYP ROOF EDGE NO PARAPET

3/4" = 1'-0"

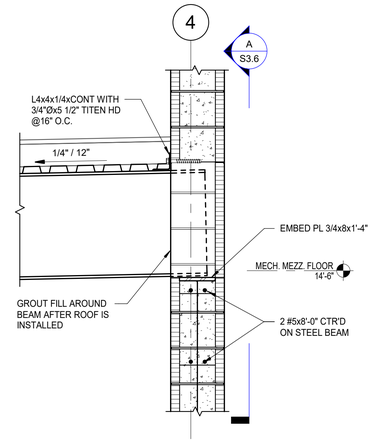

3 SECTION AT BEAM TO WALL CONNECTION

3/4" = 1'-0"

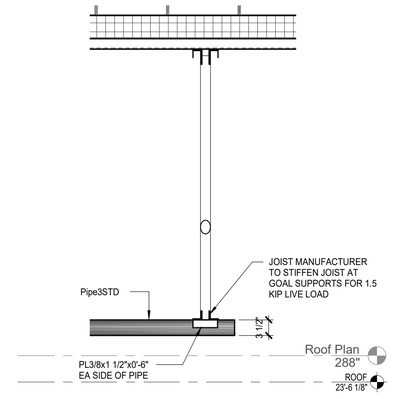

4 GOAL SUPPORT TO JOIST CONNECTION

3/4" = 1'-0"

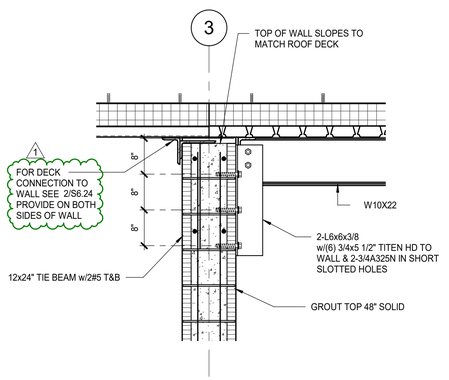

5 HIGH ROOF DECK CONNECTION

3/4" = 1'-0"

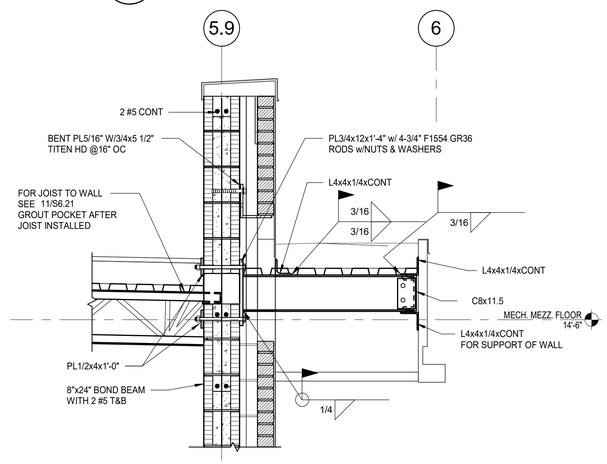

6 SECTION AT CANOPY

3/4" = 1'-0"

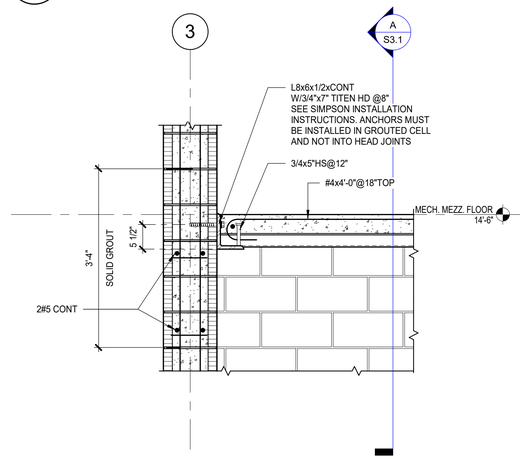

7 TYPICAL SLAB TO WALL CONN

3/4" = 1'-0"

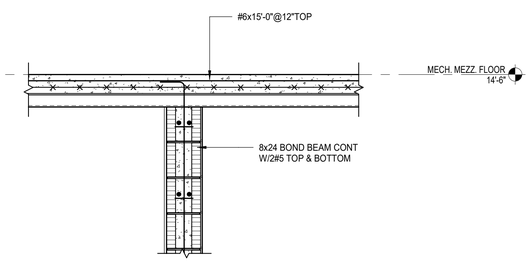

8 TYP MEZZANINE SLAB TO WALL

3/4" = 1'-0"

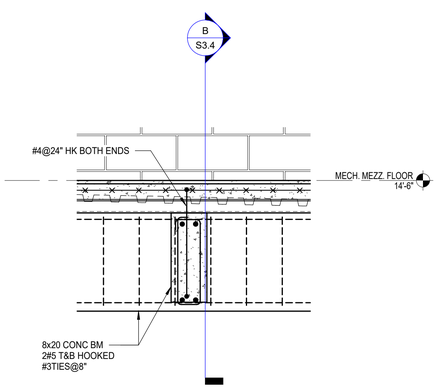

9 SECTION AT MEZZANINE SUPPORT BEAM

3/4" = 1'-0"

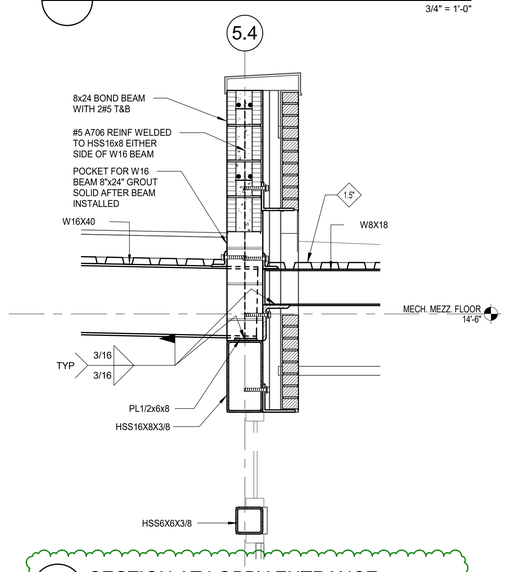

1 10 SECTION AT LOBBY ENTRANCE

3/4" = 1'-0"

PHASE:	DRAWN:	REVIEWED:	DATE:	ID:	REVISION:	DRAWN:	REVIEWED:	DATE:
SCHEMATIC DESIGN								
DESIGN DEVELOPMENT	T. CANNON	C. CHILDERS	12-20-2024	1	Addendum 1			6/3/2025
80% CONSTRUCTION DOCS.	T. CANNON	C. CHILDERS	03-21-2025					
CONSTRUCTION DOCS.	T. CANNON	C. CHILDERS	05-08-2025					

THESE DRAWINGS AND RENDERINGS ARE INSTRUMENTS OF SERVICE. THE DRAWINGS AND ASSOCIATED COPIES THEREOF, INCLUDING ELECTRONIC MEDIA AND CADD FILES, ARE THE PROPERTY OF ARCHITECTS LEWIS + WHITLOCK, P.A.A. THEIR USE, REPRESENTATION OR REPRODUCTION FOR ANY PURPOSE NOT SPECIFICALLY AGREED TO IN WRITING BY ARCHITECTS LEWIS + WHITLOCK, P.A. IS PROHIBITED. A COPYRIGHT NOTICE IS PLACED ON EACH DRAWING EXHIBIT OR RENDERING ON THIS DOCUMENT AND SHALL NOT BE REMOVED FROM THESE DOCUMENTS.

Client:
Leon County Schools
3420 W. Tharpe St. Suite 100
Tallahassee, Florida 32303

Job Title:
Griffin Middle School - Phase 2
800 Alabama St. Tallahassee, FL 32304

Consultant:
BLISS & NYITRAY, INC.
STRUCTURAL ENGINEERS
Certificate of Authorization No. 674
227 N Bronough St, Suite 7300
Tallahassee Florida, 32301
T 850-222-4454 F 850-222-9425
www.bnienginees.com

Project #: 23483 / BNI No. 23722.03
Phase: CONSTRUCTION DOCUMENTS

This item has been digitally signed and sealed by Christopher S. Childers, PE on 6/3/2025. Printed copies of this document are not considered signed and sealed and the signature must be verified on any electronic copies.

CHRISTOPHER S. CHILDERS
LICENSE
NO. 50812
STATE OF FLORIDA
PROFESSIONAL ENGINEER

Christopher S. Childers, P.E.
Fla. Reg. No. 50812

TO THE BEST OF MY KNOWLEDGE, THE PLANS AND SPECIFICATIONS COMPLY WITH THE APPLICABLE MINIMUM BUILDING CODES.

ALW

Architects Lewis + Whitlock
206 West Virginia St.
Tallahassee, Florida 32301
850.942.1718
www.think3d.net

Description:
TYPICAL STEEL DETAILS

Sheet No.:
S6.24

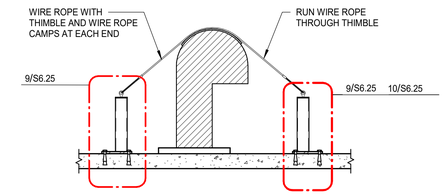

4 EXHAUST ANCHORAGE

1/2" = 1'-0"

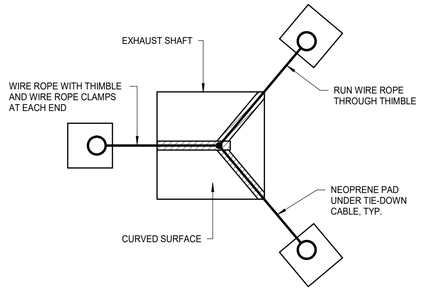

5 HOOD OR FUME EXHAUST

3/4" = 1'-0"

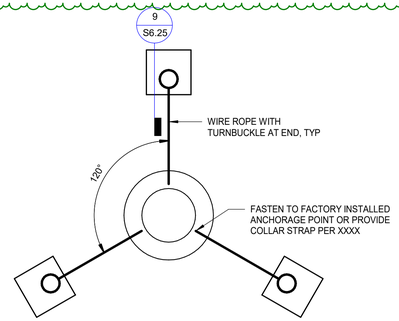

6 HOOD OR FUME EXHAUST

3/4" = 1'-0"

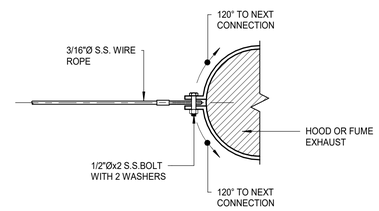

7 TENSION CABLE ANCHORAGE

1 1/2" = 1'-0"

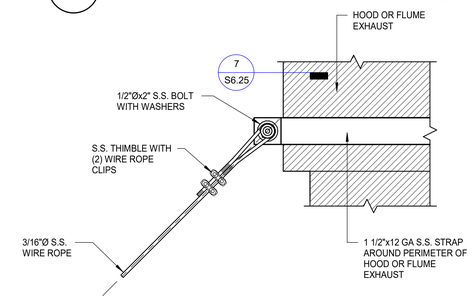

8 TENSION CABLE ANCHORAGE

1 1/2" = 1'-0"

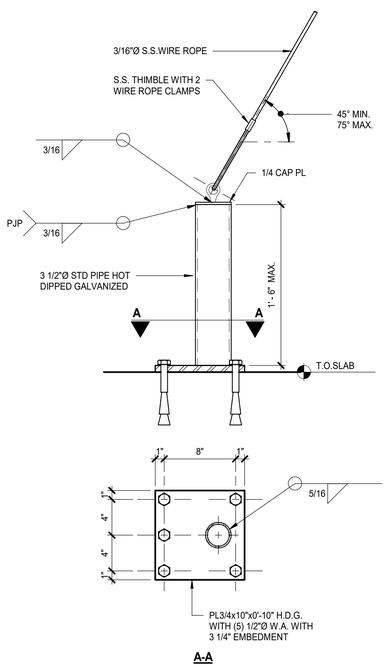

9 TENSION CABLE ANCHOR

1 1/2" = 1'-0"

NOTES:

1. 3/16" Ø WIRE ROPE - 7x19 TYPE 316 STAINLESS STEEL WITH A MINIMUM BREAKING STRENGTH OF 3,700#
2. WIRE ROPE CLIPS - CROSBY SS-450. USE A MINIMUM OF 2 CLIPS FOR 3/16"Ø WIRE ROPE WITH STAINLESS STEEL THIMBLE OF CORRESPONDING SIZE.
3. TURNBUCKLES 5/8"Ø TYPE 316 STAINLESS STEEL WITH A MINIMUM BREAKING STRENGTH OF 3,500#.
4. ALL STEEL SHALL BE HOT DIPPED GALVANIZED.
5. CABLES ARE PREFERRED TO BE INSTALLED IN HOT WEATHER TO ACCOUNT FOR THERMAL EXPANSION. CABLES SHOULD BE RE-TIGHTENED IF INSTALLED IN COLD WEATHER

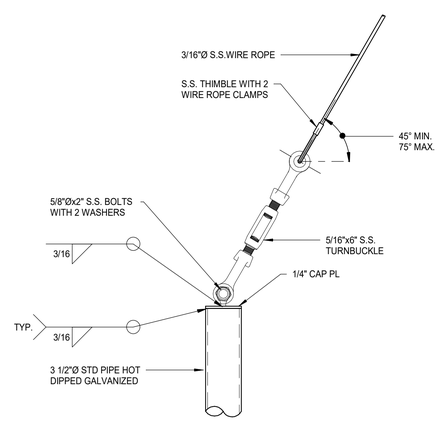

10 TENSION CABLE ANCHOR

1 1/2" = 1'-0"

PHASE:	DRAWN:	REVIEWED:	DATE:	ID:	REVISION:	DRAWN:	REVIEWED:	DATE:
SCHEMATIC DESIGN	T. CANNON	C. CHILDERS	12-20-2024	1	Addendum 1			6/3/2025
DESIGN DEVELOPMENT	T. CANNON	C. CHILDERS	03-21-2025					
80% CONSTRUCTION DOCS.	T. CANNON	C. CHILDERS	05-09-2025					
CONSTRUCTION DOCS.	T. CANNON	C. CHILDERS						

THESE DRAWINGS AND RENDERINGS ARE INSTRUMENTS OF SERVICE. THE DRAWINGS AND ASSOCIATED COPIES THEREOF, INCLUDING ELECTRONIC MEDIA AND CAD FILES, ARE THE PROPERTY OF ARCHITECTS LEWIS + WHITLOCK, PA & THEIR USE, REPRESENTATION OR REPRODUCTION FOR ANY PURPOSE EXCEPT PURSUANT TO WRITTEN AGREEMENT WITH ARCHITECTS LEWIS + WHITLOCK, PA IS PROHIBITED. THE DRAWINGS MUST BE REPRODUCED AS IF DIRECTLY PLACED ON EACH DRAWING EXHIBIT OR RENDERING ON THIS DOCUMENT AND SHALL NOT BE REMOVED FROM THESE DOCUMENTS

Client:

Leon County Schools
3420 W. Tharpe St. Suite 100
Tallahassee, Florida 32303

Job Title:

Griffin Middle School - Phase 2
800 Alabama St. Tallahassee, FL 32304

Consultant:

BLISS & NYITRAY, INC.
STRUCTURAL ENGINEERS
Certificate of Authorization No. 674
227 N Bronough St., Suite 7300
Tallahassee Florida, 32301
T 850-222-4454 F 850-222-9425
www.bnieng.com

Project #: 23483 / BNI No. 23T22.03

Phase: CONSTRUCTION DOCUMENTS

This item has been digitally signed and sealed by Christopher S. Childers, PE on 6/3/2025. Printed copies of this document are not considered signed and sealed and the signature must be verified on any electronic copies.

CHRISTOPHER S. CHILDERS
LICENSE
NO. 50812
STATE OF FLORIDA
PROFESSIONAL ENGINEER

Christopher S. Childers, P.E.
Fla. Reg. No. 50812

TO THE BEST OF MY KNOWLEDGE, THE PLANS AND SPECIFICATIONS COMPLY WITH THE APPLICABLE MINIMUM BUILDING CODES.

ALW

Architects Lewis + Whitlock
206 West Virginia St.
Tallahassee, Florida 32301
850.942.1718
www.think3d.net

Description:
TYPICAL ROOF TOP UNIT DETAILS

Sheet No.:
S6.25

TABLE OF CONTENTS
VOLUME 2 OF 3

TECHNICAL SPECIFICATIONS

DIVISION 01 - GENERAL REQUIREMENTS

011000	SUMMARY
012300	ALTERNATES
012500	SUBSTITUTION PROCEDURES
013000	ADMINISTRATIVE REQUIREMENTS
014000	QUALITY REQUIREMENTS
015713	TEMPORARY EROSION AND SEDIMENT CONTROL
016000	PRODUCT REQUIREMENTS
017000	EXECUTION AND CLOSEOUT REQUIREMENTS
017419	CONSTRUCTION WASTE MANAGEMENT AND DISPOSAL
019113	GENERAL COMMISSIONING REQUIREMENTS

DIVISION 02 – EXISTING CONDITIONS

024100	DEMOLITION

DIVISION 03 - CONCRETE

031000	CONCRETE FORMING AND ACCESSORIES
032000	CONCRETE REINFORCING
033000	CAST-IN-PLACE CONCRETE
033543	POLISHED CONCRETE FINISHING

DIVISION 04 - MASONRY

042723	CAVITY WALL UNIT MASONRY
042900	REINFORCED UNIT MASONRY

DIVISION 05 - METALS

051200	STRUCTURAL STEEL
052100	STEEL JOIST FRAMING
053100	STEEL DECK
054000	COLD-FORMED METAL FRAMING
055100	METAL STAIRS
055133	METAL LADDERS
055213	PIPE AND TUBE RAILINGS

DIVISION 06 - WOOD, PLASTICS, AND COMPOSITES

061000 ROUGH CARPENTRY
064100 ARCHITECTURAL WOOD CASEWORK

DIVISION 07 - THERMAL AND MOISTURE PROTECTION

070553 FIRE AND SMOKE ASSEMBLY IDENTIFICATION
072100 THERMAL INSULATION
072500 WEATHER BARRIERS
074113 METAL ROOF PANELS - PETERSEN ALUMINUM
074213 METAL WALL PANELS
075419 POLYVINYL-CHLORIDE ROOFING - VERSICO
077100 ROOF SPECIALTIES
077123 MANUFACTURED GUTTERS AND DOWNSPOUTS
077200 ROOF ACCESSORIES
078400 FIRESTOPPING
079200 JOINT SEALANTS

DIVISION 08 - OPENINGS

081113 HOLLOW METAL DOORS AND FRAMES
083100 ACCESS DOORS AND PANELS
083326 OVERHEAD COILING GRILLES
084313 ALUMINUM-FRAMED STOREFRONTS
087100.11 DOOR HARDWARE
088000 GLAZING
088300 MIRRORS

DIVISION 09 - FINISHES

092116 GYPSUM BOARD ASSEMBLIES
092216 NON-STRUCTURAL METAL FRAMING
093000 TILING
095100 ACOUSTICAL CEILINGS
096420 WOOD FLOATING FLOORING
096466 WOOD ATHLETIC FLOORING
096500 RESILIENT FLOORING
096700 FLUID-APPLIED FLOORING
096813 TILE CARPETING
098414 ACOUSTIC STRETCHED-FABRIC WALL AND CEILING SYSTEMS
099113 EXTERIOR PAINTING
099123 INTERIOR PAINTING
099600 HIGH-PERFORMANCE COATINGS

SECTION 096420
WOOD FLOATING FLOORING

PART 1 GENERAL

1.01 SECTION INCLUDES

A. Wood floating flooring.

B. Subflooring.

C. Resilient cushioning.

D. Sheet vapor retarder.

E. Floor finishes.

F. Surface finishing.

1.02 RELATED REQUIREMENTS

A. Section 033000 - Cast-in-Place Concrete: Concrete subfloor surface; recessed.

1.03 REFERENCE STANDARDS

A. MFMA (PUR) - Performance and Uniformity Rating Sport Specific Standards; current edition.

B. MFMA (SPEC) - Guide Specifications for Maple Flooring Systems; current edition.

1.04 SUBMITTALS

A. See Section 013000 - Administrative Requirements, for submittal procedures.

B. Shop Drawings: Indicate floor joint pattern and termination details.
   1. Indicate provisions for expansion and contraction, wall base, and game insert or socket devices.
   2. Indicate size and type fasteners and anchors.

C. Concrete Subfloor Test Report: Submit a copy of the moisture and alkalinity (pH) test reports.

D. Installation Instructions: Indicate standard and special installation procedures.

E. Maintenance Data: Include maintenance procedures and recommended maintenance materials.

F. Manufacturer's Qualification Statement.

G. Installer's Qualification Statement.

1.05 QUALITY ASSURANCE

A. Perform work of this section in accordance with MFMA (SPEC).

B. Manufacturer Qualifications: Company specializing in manufacturing products specified in this section.
   1. Minimum five years of documented experience.

C. Installer Qualifications: Company specializing in installing products specified in this section.
   1. Minimum five years of documented experience.

1.06 MOCK-UP

A. Construct mock-up of wood athletic flooring including subflooring, resilient cushioning, and wood flooring. Illustrate final finish of sealed wood flooring.

B. Size of mock-up to be not less than 24 inch long by 24 inch wide.

C. Mock-up may remain as part of the work.

1.07 DELIVERY, STORAGE, AND HANDLING

A. Deliver materials and store off the floor in a well-ventilated, weather-tight space.

1.08 FIELD CONDITIONS

A. The wood flooring and its components specified herein shall not be delivered or installed until all wet trades and overhead work is completed. This includes all masonry, painting, plaster, tile, marble, and terrazzo, as well as all overhead mechanical trades. The building shall be fully enclosed and weather tight and all permanent windows and doorways shall be installed.

B. The concrete substrate shall be determined fully cured by industry standards and materials shall not be stored at the installation location unless the in-slab relative humidity level for the concrete slab is 85% or lower before installation. The concrete slab shall be free of all foreign materials and broom cleaned by the General Contractor when turned over to the floor installer.

C. Permanent HVAC units for the building shall have been operating a minimum of one week prior to the floor installation start up.

D. During and after installation, the H.V.A.C. system should be complete, operational, and conditioning air to be within **55/75 degrees Fahrenheit (13-27 degrees Celsius) with relative humidity between 35/50 percent** or to conditions expected following installation and during occupancy.

E. Flooring must be stored on site in a dry, well-ventilated area while acclimating to site conditions. Moisture content of wood shall be consistent with the ambient conditions of the building as it will be maintained when occupied.

1.09 WARRANTY

A. Provide manufacturer's standard 1-year warranty.

PART 2 PRODUCTS

2.01 MANUFACTURERS

A. Wood Athletic Flooring:
   1. Action Floor Systems; Action Anchor Flex: www.actionfloors.com/#sle.
   2. Connor Sports Flooring; _____: www.connorfloor.com/#sle.
   3. Robbins Sports Surfaces; _____: www.robbinsfloor.com/#sle.
   4. Basis of design: AACER Wood Floors, Crandon WI..
   5. Substitutions: Section 016000 - Product Requirements.

2.02 WOOD FLOATING FLOORING

A. General: Wood strip flooring, MFMA (PUR) compliant for application indicated; system components provided by single manufacturer.

B. System Description:
   1. Fixed wood strip floating flooring.

2.03 COMPONENTS

A. Wood Strip Flooring:
   1. Provide MFMA grade-marked flooring, stamped as manufactured by MFMA member mill.
   2. Species: Northern hard maple, kiln dried; tongue and groove edges, end matched.
   3. Grade: Second and better.
   4. Thickness: 25/32 inch.
   5. Width: 2-1/4 inches.
   6. Provide 1/64" expansion bead.

B. Fasteners:
   1. Flooring – 1-3/4” (44mm) or 2” (51mm) barbed cleats or staples.
   2. Subfloor – 1” (25mm) coated staples or equivalent.

C. Subflooring: 2 layers of 15/32” (12mm) APA rated plywood or manufacturer’s approved sheathing. Exposure 1.

D. Resilient Underlayment: 50 durometer TriPower pad.
   1. Thickness: 3/4 inch

E. Vapor Retarder: Polyethylene sheet, 6 mil thick

2.04 FINISHES

A. Floor Finishes: Types recommended by flooring manufacturer and complying with MFMA specifications.
   1. Sealer: Oil based urethane.
   2. Finish Coats: Oil based urethane; high gloss.

2.05 ACCESSORIES

A. Ventilating Base: Heavy duty, molded, vented cove base with pre-molded outside corners, black color.

PART 3 EXECUTION

3.01 EXAMINATION

A. Verify existing conditions before starting this work.

B. Verify that concrete subfloor surface is smooth and flat to plus or minus 1/4 inch in 10 feet.

C. Cementitious Subfloor Surfaces: Verify that substrates are ready for flooring installation by testing for moisture and alkalinity (pH).
   1. Obtain instructions if test results are not within limits recommended by flooring material manufacturer and adhesive materials manufacturer.

D. Verify that required floor-mounted utilities are in correct location.

3.02 PREPARATION

A. Prepare substrate to receive wood flooring in accordance with manufacturer's and MFMA instructions.

B. Vacuum clean substrate.

3.03 INSTALLATION

A. Place vapor retarder over concrete surface, overlap seams a minimum of 6 inches and seal with tape.

B. Resilient Underlayment: Install in accordance with manufacturer's instructions.

C. Install first subfloor layer perpendicular to finished flooring. (Optional laid at 45-degree angle) Allow 1/4” (6mm) space between ends of abutted panels and stagger joints 4’ (1219mm). Infinity/Aacer Performance pads shall be installed on underside of bottom layer 12” (305mm) on center, 32 per sheet. Install solid blocking at long term heavy load locations and doorways. Provide 1-1/2” (38mm) expansion void at perimeter and all vertical obstructions.

D. Install second layer of plywood material laid diagonally at 45-degree angles over the first layer with 1/4" (6mm) spacing on all edges, breaking rows at 4’ (1219mm). Second layer shall be attached using 1” (25mm) coated staples or equivalent, at a minimum of 12” (305mm) on center

E. Wood Flooring:
   1. Install in accordance with manufacturer's and MFMA instructions.
   2. Install Infinity Wood Floors maple flooring by power nailing or stapling approximately 12” (305mm) on center with all end joints properly driven tight.
   3. Expansion joints may be required between flooring strips intermittently throughout the floor. Requirements determined by site and geographical conditions.
   4. Provide 1-1/2” (40mm) to 2” (51mm) expansion void at all walls and permanent obstructions.

F. Install base at floor perimeter to cover expansion space in accordance with manufacturer's instructions. Miter inside corners.

G. Finishing:
   1. Mask off adjacent surfaces before beginning sanding.
   2. Sand flooring to smooth even finish with no evidence of sander marks. Remove dust by vacuum.

3. Apply finishes in accordance with floor finish manufacturer's and MFMA instructions.
4. Apply (2) coats of approved seal and (2) coats of approved finish per manufacturer’s label instructions. Floor shall be buffed, cleaned, and tacked between coats.

3.04 CLEANING

A. Clean floor surfaces in accordance with floor finish manufacturer's instructions.

3.05 PROTECTION

A. Prohibit traffic on finished floor for 72 hours after installation.

B. Place protective coverings over finished floors; do not remove coverings until Date of Substantial Completion.

END OF SECTION 096420

SECTION 096500
RESILIENT FLOORING

PART 1 GENERAL

1.01 SECTION INCLUDES

A. Resilient tile flooring.

B. Resilient base.

C. Installation accessories.

1.02 REFERENCE STANDARDS

A. ASTM F710 - Standard Practice for Preparing Concrete Floors to Receive Resilient Flooring; 2011.

B. ASTM F1861 - Standard Specification for Resilient Wall Base; 2008 (Reapproved 2012).

C. NFPA 253 - Standard Method of Test for Critical Radiant Flux of Floor Covering Systems Using a Radiant Heat Energy Source; 2015.

1.03 SUBMITTALS

A. See Section 013000 - Administrative Requirements, for submittal procedures.

B. Product Data: Provide data on specified products, describing physical and performance characteristics; including sizes, patterns and colors available; and installation instructions.

C. Shop Drawings: Indicate seaming plans and floor patterns.

D. Verification Samples: Submit two samples, 4 by 4 inch in size illustrating color and pattern for each resilient flooring product specified.

E. Certification: Prior to installation of flooring, submit written certification by flooring manufacturer and adhesive manufacturer that condition of sub-floor is acceptable.

F. Maintenance Data: Include maintenance procedures, recommended maintenance materials, and suggested schedule for cleaning, stripping, and re-waxing.

1.04 QUALITY ASSURANCE

A. Manufacturer Qualifications: Company specializing in manufacturing specified flooring with minimum three years documented experience.

B. Installer Qualifications: Company specializing in installing specified flooring with minimum 5 years documented experienc.

1.05 DELIVERY, STORAGE, AND HANDLING

A. Upon receipt, immediately remove any shrink-wrap and check materials for damage and the correct style, color, quantity and run numbers.

B. Store all materials off of the floor in an acclimatized, weather-tight space.

C. Maintain temperature in storage area between 55 degrees F and 90 degrees F.

D. Protect roll materials from damage by storing on end.

E. Do not double stack pallets.

1.06 FIELD CONDITIONS

A. Store materials for not less than 48 hours prior to installation in area of installation at a temperature of 70 degrees F to achieve temperature stability. Thereafter, maintain conditions above 55 degrees F.

PART 2 PRODUCTS

2.01 TILE FLOORING

A. Vinyl Tile - Type ____: Printed film type, with transparent or translucent wear layer.

1. Minimum Requirements: Comply with ASTM F1700, of Class corresponding to type specified.
2. Wear Layer Thickness: 0.040 inch.
3. Total Thickness: 0.125 inch.
4. Pattern: As indicated on drawings..
5. Color: As indicated on drawings.

2.02 RESILIENT BASE

A. Resilient Base: ASTM F1861, Type TP, rubber, thermoplastic; top set Style B, Cove.
   1. Critical Radiant Flux (CRF): Minimum 0.45 watt per square centimeter, when tested in accordance with ASTM E648 or NFPA 253.
   2. Thickness: 0.125 inch.
   3. Length: Roll.
   4. Color and size: As indicated on drawings.
   5. Accessories: Premolded external corners and internal corners.

2.03 ACCESSORIES

A. Primers and Adhesives: Waterproof; types recommended by flooring manufacturer.
   1. VOC Content Limits: As specified in Section 016116.

PART 3 EXECUTION

3.01 EXAMINATION

A. Verify that surfaces are flat to tolerances acceptable to flooring manufacturer, free of cracks that might telegraph through flooring, clean, dry, and free of curing compounds, surface hardeners, and other chemicals that might interfere with bonding of flooring to substrate.

B. Cementitious Sub-floor Surfaces: Verify that substrates are dry enough and ready for resilient flooring installation by testing for moisture and pH.
   1. Test in accordance with ASTM F710.
   2. Obtain instructions if test results are not within limits recommended by resilient flooring manufacturer and adhesive materials manufacturer.

3.02 PREPARATION

A. Prepare floor substrates as recommended by flooring and adhesive manufacturers.

B. Apply primer as required to prevent "bleed-through" or interference with adhesion by substances that cannot be removed.

3.03 INSTALLATION - GENERAL

A. Starting installation constitutes acceptance of sub-floor conditions.

B. Install in accordance with manufacturer's written instructions.

C. Adhesive-Applied Installation:
   1. Fit joints and butt seams tightly.
   2. Set flooring in place, press with heavy roller to attain full adhesion.

D. Install edge strips at unprotected or exposed edges, where flooring terminates, and where indicated.

E. Scribe flooring to walls, columns, cabinets, floor outlets, and other appurtenances to produce tight joints.

F. Spread only enough adhesive to permit installation of materials before initial set.

G. Fit joints and butt seams tightly.

H. Set flooring in place, press with heavy roller to attain full adhesion.

I. Install edge strips at unprotected or exposed edges, where flooring terminates, and where indicated.
   1. Resilient Strips: Attach to substrate using adhesive.

J. Scribe flooring to walls, columns, cabinets, floor outlets, and other appurtenances to produce tight joints.

3.04 INSTALLATION - TILE FLOORING

A. Mix tile from container to ensure shade variations are consistent when tile is placed, unless otherwise indicated in manufacturer's installation instructions.

3.05 INSTALLATION - RESILIENT BASE

A. Fit joints tightly and make vertical. Maintain minimum dimension of 18 inches between joints.

B. Miter internal corners. At external corners, use premolded units. At exposed ends, use premolded units.

C. Install base on solid backing. Bond tightly to wall and floor surfaces.

D. Scribe and fit to door frames and other interruptions.

3.06 CLEANING

A. Remove excess adhesive from floor, base, and wall surfaces without damage.

B. Clean in accordance with manufacturer's written instructions.

3.07 PROTECTION

A. Prohibit traffic on resilient flooring for 48 hours after installation.

END OF SECTION 096500

This page intentionally left blank