PROJECT MANUAL & SPECIFICATIONS

BID DOCUMENTS SUBMITTAL

For The
NURSING & SIMULATION CENTER



DAG Architects

GULF COAST STATE COLLEGE
SINCE 1957

TABLE OF CONTENTS

DIVISION 00 – PROCUREMENT AND CONTRACTING REQUIREMENTS

00 01 00	INVATATION TO BID
00 41 00	BID FORM AND SCHEDULE
00 41 01	ADDENDUM ACKNOWLEDGMENT
00 41 02	ANTI-COLLUSION CLAUSE
00 41 03	CONFLICT OF INTEREST CLAUSE
00 41 04	DRUG FREE WORKPLACE
00 41 05	E-VERIFY CLAUSE
00 41 06	CRIMES STATEMENT
00 41 07	STATE OF FL AFFIDAVIT REGARDING THE USE OF COERCION FOR LABOR AND SERVICES
00 43 13	BID BOND
00 43 36	LIST OF SUBCONTRACTORS
00 60 00	LABOR AND MATERIAL PAYMENT BOND
00 60 01	PERFORMANCE BOND
00 70 00	BUILDING PERMIT
00 73 00	GENERAL CONDITIONS OF THE CONTRACT FOR CONSTRCTION & SUPPLEMENTARY CONDITIONS OF THE CONTRACT / OWNER - CONTRACTOR AGREEMENT

DIVISION 01 – GENERAL REQUIREMENTS

01 01 00	SUMMARY OF WORK
01 04 00	COORDINATION
01 05 00	FIELD ENGINEERING
01 11 00	STATE OF FLORIDA PRODUCT APPROVAL REQUIREMENTS
01 21 00	ALLOWANCES
01 21 01	PROCEDURES AND PERFORMANCES
01 23 00	ALTERNATE BID ITEMS (ABI)
01 25 00	SUBSTITUTION PROCEDURES
01 25 00.1	CSI SUBSTITUTION FORM
01 29 00	PAYMENT PROCEDURES
01 31 00	PROJECT MANAGEMENT AND COORDINATION
01 32 00	CONSTRUCTION PROGRESS DOCUMENTATION
01 32 33	PHOTOGRAPHIC DOCUMENTATION
01 33 00	SUBMITTAL PROCEDURES
01 40 00	QUALITY REQUIREMENTS
01 42 00	REFERENCES
01 43 30	QA FOR FIRESTOPPING PENETRATIONS AND JOINTS
01 50 00	TEMPORARY FACILITIES AND CONTROLS
01 55 00	MATERIALS AND EQUIPMENT
01 57 19	EROSION CONTROL AND ENVIRONMENTAL PROTECTION
01 70 00	CONTRACT CLOSEOUT
01 73 00	EXECUTION
01 74 19	CONSTRUCTION WASTE MANAGEMENT AND DISPOSAL
01 77 00	CLOSEOUT PROCEDURES
01 78 00	WARRANTIES AND BONDS
01 78 23	OPERATION AND MAINTANANCE DATA
01 78 39	PROJECT RECORD DOCUMENTS
01 79 00	DEMONSTRATION AND TRAINING

DIVISION 02 – EXISTING CONDITIONS

02 32 00	SUBSURFACE INVESTIGATION
02 32 01	GEOTECHNICAL DATA / ENGINEERING REPORT
02 41 16	STRUCTURE DEMOLITION

DIVISION 03 – CONCRETE

03 36 00	INTEGRALLY COLORED CONCRETE
03 11 19	INSULATING CONCRETE FORMING
03 30 00	CAST-IN-PLACE CONCRETE

DIVISION 04 – MASONRY

04 26 13	MASONRY VENEER
04 72 00	CAST STONE MASONRY

DIVISION 05 – METALS

05 12 00	STRUCTURAL STEEL FRAMING
05 21 00	STEEL JOIST FRAMING
05 31 00	STEEL DECKING
05 40 00	COLD-FORMED METAL FRAMING
05 50 00	METAL FABRICATIONS
05 51 13	METAL PAN STAIRS
05 52 13	PIPE AND TUBE RAILINGS

DIVISION 06 – WOOD AND PLASTICS AND COMPOSITES

06 10 00	ROUGH CARPENTRY
06 40 23	INRERIOR ARCHITECTURAL WOODWORK
06 41 16	PLASTIC LAMINATE CLAD ARCHITECTURAL CABINETS

DIVISION 07 – THERMAL AND MOSTURE PROTECTION

07 13 26	SELF-ADHERING SHEET WATERPROOFING
07 17 16	BENTONITE WATERPRFOOFING
07 21 00	THERMAL INSULATION
07 27 26	FLUID APPLIED MEMBRANE AIR BARRIERS _ VAPOR PERMEABLE
07 41 00	STANDING SEAM METAL ROOF PANELS
07 41 01	METAL WALL AND SOFFIT PANELS
07 62 00	SHEET METAL FLASHING AND TRIM GUTTERS, DOWNSPOUTS
07 71 00	ROOF SPECIALTIES
07 84 13	PENETRATION FIRESTOPPING
07 92 00	JOINT SEALANTS
07 92 19	ACOUSTICAL JOINT SEALANTS

DIVISION 08 – OPENINGS

08 11 13	HOLLOW METAL DOORS AND FRAMES
08 14 16	FLUSH WOOD DOORS
08 31 13	ACCESS DOORS AND FRAMES
08 33 00	INSULATED ROLLING SERVICE DOOR
08 41 13	ALUMINUM FRAMED ENTRANCES AND STOREFRONTS (IR 521T)
08 41 14	ALUMINUM ENTRANCES (DOORS) (500 IR)
08 41 15	ALUMINUM FRAMED ENTRANCES AND STOREFRONTS (TRIFAB-451)
08 41 16	ALUMINUM FRAMED ENTRANCES AND STOREFRONTS (TRIFAB-451T)
08 44 13	ALUMINUM CURTAIN WALL (1600 WALL SYSTEM 1 IR)
08 71 00	DOOR HARDWARE
08 80 00	GLAZING
08 91 19	FIXED LOUVERS

DIVISION 09 – FINISHES

09 22 16	NON-STRUCTURAL METAL FRAMING
09 25 13	FINISH SYSTEM FOR ICF (INSULATING CONCRETE FORMS)
09 24 13.1	FINISH SYSTEM FOR EXTERIOR COLUMN WRAPS AT LOBBY CURTAINWALL
09 29 00	GYPSUM BOARD

NOTE: FOR ALL OTHER FINISHES, REFER TO INTERIOR DESIGN DOCUMENTS

DIVISION 10 – SPECIALTIES

10 11 00	VISUAL DISPLAY BOARDS
10 14 16	PLAQUES
10 14 19	DIMENSIONAL LETTER SIGNAGE
10 14 23	ROOM IDENTIFICATION PANEL SIGNAGE
10 21 13	PLASTIC TOILET COMPARTMENTS
10 26 00	WALL AND DOOR PROTECTION
10 28 00	TOILET BATH AND LAUNDRYACCESSORIES
10 44 13	FIRE PROTECTION CABINETS
10 44 16	FIRE EXTINGUISHERS
10 71 13	EXTERIOR SUN CONTROL DEVICES

DIVISION 11 – EQUIPMENT

11 65 00 -	AUDIO – VISUAL SYSTEMS

DIVISION 12 – FURNISHINGS

12 36 61	SOLID SURFACING COUNTERTOPS

DIVISION 13 – SPECIAL CONSTRUCTION – NOT USED

DIVISION 14 – CONVEYING EQUIPMENT

14 21 00	ELECTRIC TRACTION ELEVATORS

DIVISION 21- FIRE PROTECTION

21 13 00	BUILDING SPRINKLER SYSTEM
21 31 16	DIESEL ENGINE DRIVE PIRE PUMP

DIVISION 22 – PLUMBING

22 01 00	PLUMBING GENERAL
22 07 00	INSULATION FOR PLUMBING EQUIPMENT AND PIPING
22 11 13	POTABLE WATER SYSTEM
22 13 16	SOIL, WASTE, AND VENT SYSTEM
22 30 00	PLUMBING FIXTURES, EQUIPMENT, TRIM & SCHEDULE
22 62 00	MEDICAL VACUUM SYSTEM
22 63 00	MEDICAL GAS SYSTEM

DIVISION 23 – HEATING, VENTILATING AND, AIR CONDITIONING (HVAC)

23 01 00	MECHANICAL GENERAL
23 05 13	ELECTRIC MOTORS
23 05 20	PIPES AND PIPE FITTINGS
23 05 21	PIPING SPECIALTIES
23 05 23	VALVES
23 05 29	SUPPORTS, ANCHORS, AND SEALS
23 05 48	VIBRATION ISOLATION
23 05 53	MECHANICAL IDENTIFICATION
23 05 56	ACCESS DOORS
23 05 90	START-UP REQUIREMENTS FOR HVAC SYSTEMS
23 05 91	TESTING, CLEANING, PIPING SYSTEMS
23 05 93	TESTING AND BALANCING OF MECHANICAL SYSTEMS
23 07 13	EXTERIOR INSULATION FOR DUCTWORK
23 07 16	INSULATION FOR HVAC EQUIPMENT AND PIPING

23 08 00 HVAC SYSTEM COMMISIONING
23 09 23 DIRECT DIGITAL CONTROLS
23 31 13 HVAC METAL DUCTWORK
23 33 00 DUCTWORK ACCESSORIES
23 34 00 FANS
23 37 13 GRILLES, REGISTERS, AND CEILING DIFFUSERS
23 37 26 WALL LOUVERS
23 81 03 OUTSIDE AIR PRECONDITIONING UNITS
23 81 28 DUCTLESS SPLIT SYSTEM AIR CONDITIONING UNITS
23 81 30 VARIABLE REFRIGERANT VOLUME HEAT PUMP SYSTEMS

DIVISION 26 - ELECTRICAL

26 05 00 ELECTRICAL GENERAL REQUIREMENTS
26 05 19 LOW-VOLTAGE ELECTRICAL POWER CONDUCTORS AND CABLES
26 05 23 CONTROL-VOLTAGE ELECTRICAL POWER CABLES
26 05 26 GROUNDING AND BONDING FOR ELECTRICAL SYSTEMS
26 05 29 HANGERS AND SUPPORTS FOR ELECTRICAL SYSTEMS
26 05 33 RACEWAYS AND BOXES FOR ELECTRICAL SYSTEMS
26 05 43 UNDERGROUND DUCTS AND RACEWAYS
26 05 44 SLEEVES AND SLEEVE SEALS FOR ELECTRICAL RACEWAYS AND CABLING
26 05 53 IDENTIFICATION FOR ELECTRICAL SYSTEMS
26 05 73.13 SHORT CIRCUIT STUDIES
26 05 73.16 COORDINATION STUDIES
26 05 73.19 ARC-FLASH HAZARD ANALYSIS
26 08 00 COMMISIONING OF ELECTRICAL SYSTEMS
26 09 23 LIGHTING CONTROL DEVICES
26 09 43 DISTRIBUTED INTELLIGENCE BASED LIGHTING CONTROLS
26 24 16 PANELBOARDS
26 27 26 WIRING DEVICES
26 28 16 ENCLOSED SWITCHES AND CIRCUIT BREAKERS
26 41 13 LIGHTNING PROTECTION FOR STRUCTURES
26 43 13 SURGE PROTECTION FOR LOW-VOLTAGE ELECTRICAL POWER CIRCUITS
26 51 19 LED INTERIOR LIGHTING
26 52 13 EMERGENCY AND EXIT LIGHTING
26 56 13 LIGHTING POLES AND STANDARDS
26 56 19 LED EXTERIOR LIGHTING
28 46 21.11 ADDRESSABLE FIRE-ALARM SYSTEMS

DIVISION 27 - TELECOMMUNICATIONS

27 00 00 COMMUNICATIONS STRUCTURED CABLING SYSTEM
27 50 00 INTERCOM/PA SYSTEM
27 80 00 IP SECURITY CAMERA SYSTEM

DIVISION 28 – ELECTRONIC SAFETY AND SECURITY

28 10 00 ELECTRONIC ACCESS CONTROL SYSTEM
28 31 00 FIRE DETECTION AND ALARM SYSTEMS

DIVISION 30 – SITE CLEARING, RESTORATION, AND MISCELLANEOUS SITE WORK

30 00 00 - GENERAL SITE WORK REQUIREMENTS

DIVISION 31 - EARTHWORK

31 10 00 - SITE PREPARATION
31 20 00 - EARTHWORK
31 23 16 - EARTWORK FOR UTILITIES
31 25 00 - EROSION CONTROL AND ENVIRONMENTAL PROTECTION

DIVISION 32 – SITE WORK

32 05 23 - CONCRETE FOR SITE WORK
32 13 13 - CONCRETE WALKS, CURBS, GUTTERS AND PAVEMENT
32 92 00 - RESTORATION
32 92 19 - GRASSING (BY SEEDING)
32 92 23 - SODDING
32 93 00 - PLANTS`

DIVISION 33 – (Site) UTILITIES

33 05 07 - DIRECTIONAL BORES
33 11 10 - WATER DISTRIBUTION SYSTEM
33 31 00 - SEWER COLLECTION SYSTEM
33 40 00 - STORM SEWER COLLECTION SYSTEM

THE DISTRICT BOARD OF TRUSTEES OF

GULF COAST STATE COLLEGE

NOTICE OF INVITATION TO BID

SEALED BIDS FROM QUALIFIED FIRMS TO PROVIDE CONSTRUCTION SERVICES FOR GULF COAST STATE COLLEGE SHALL BE RECEIVED BY THE DISTRICT BOARD OF TRUSTEES OF GULF COAST STATE COLLEGE, AT THE PROCUREMENT DEPARTMENT, 5230 WEST HIGHWAY 98, PANAMA CITY, FLORIDA, 32401 UP UNTIL 2:00 PM (CST), **OCTOBER 28, 2025.** SEALED BIDS SHALL BE OPENED AT 2:01 PM (CST) ON **OCTOBER 28, 2025**. ALL BIDS SHALL BE SUBMITTED IN A SEALED ENVELOPE, PLAINLY MARKED WITH RESPONDENT'S NAME, ADDRESS, DATE AND TIME OF OPENING AND ITB NUMBER **"ITB #2-2025/2026"** FOR BID FOR CONSTRUCTION SERVICES OF THE **NURSING SIMULATION CENTER**, FOR GULF COASTSTATE COLLEGE, PANAMA CITY CAMPUS".

PLEASE SUBMIT ONE (1) ORIGINAL (MARKED "ORIGINAL"), EIGHT (8) COPIES AND ONE (1) ELECTRONIC THUMB DRIVE OF YOUR BID PACKAGE TO GCSC PROCUREMENT.

DESCRIPTION OF WORK: THIS IS AN ADVERTISEMENT FOR BIDS FOR CONSTRUCTION OF THE **"NEW 2 STORY (30,962SF) NURSING SIMULATION CENTER AND RELATED SITE WORK",** FOR GULF COAST STATE COLLEGE, PANAMA CITY CAMPUS.

A **MANDATORY PRE-BID MEETING WILL BE HELD OCTOBER 1, 2025 (10:00 TO 11:00 AM)** AT THE PROJECT SITE. THE PURPOSE OF THIS MEETING IS TO ALLOW ALL BIDDERS ACCESS TO THE SITE IN ORDER THAT THEY MAY FAMILIARIZE THEMSELVES WITH ALL EXISTING CONDITIONS THAT RELATE TO THE PROJECT. **THIS MEETING IS MANDATORY**.

ITB #2-2025/2026
GENERAL CONTRACTORS MAY OBTAIN SETS OF ELECTRONIC BID DOCUMENTS DIRECTLY THROUGH BIDNET.

INQUIRIES REGARDING THIS ITB SHOULD BE DIRECTED TO TAYLOR GILMORE, PROCUREMENT DIRECTOR, VIA EMAIL TO tgilmore1@gulfcoast.edu

THE DISTRICT BOARD OF TRUSTEES OF GULF COAST STATE COLLEGE RESERVES THE RIGHT TO ACCEPT OR REJECT ANY AND ALL BIDS IN WHOLE OR IN PART, TO WITHDRAW THE ITB, TO WAIVE INFORMALITIES IN THE SOLICITATION DOCUMENTS, TO OBTAIN NEW INVITATIONS OR TO POSTPONE THE OPENING PURSUANT TO THE GULF COAST STATE COLLEGE PROCUREMENT POLICY. EACH PROPOSAL SHALL BE VALID AND BINDING FOR A PERIOD OF (90) DAYS AFTER THE OPENING.

GULF COAST STATE COLLEGE IS AN EQUAL OPPORTUNITY EMPLOYER.

SUBMITTED BY TAYLOR GILMORE.
EXECUTIVE DIRECTOR OF PROCUREMENT AND AUXILIARY SERVICES
tgilmore1@gulfcoast.edu

Purchase Order Number P_____ will be forwarded to you

ITB #11-2023/2024 Schedule		
Time	**Day / Date**	**Description**
	SEPTEMBER 14, 21 AND AND 28, 2025	Advertise Invitation to Bid
	SEPTEMBER 12, 2025	Release / Posting of ITB on BidNet https://www.bidnetdirect.com/florida/gulfcoaststatecollege)
10:00 AM CT	**OCTOBER 1, 2025**	Mandatory Pre-Bid Conference Student Union Breezeway Gulf Coast State College 5230 West US Highway 98 Panama City, FL 32401
10:00 AM CT	**OCTOBER 14, 2025**	Deadline for Written Questions from Bidders
4:00 PM CT	**OCTOBER 21, 2025 (4:00 PM)**	Owner response to Bidder's questions via Addendum (posted on BidNet https://www.bidnetdirect.com/florida/gulfcoaststatecollege).
2:00 PM CT 2:01 PM CT	**OCTOBER 28, 2025** **OCTOBER 28, 2025 NOVEMBER 4, 2025 (SELECTION COMMITTEE TO REVIEW BIDS AND DEVELOP QAULIFIED SHORTLIST)**	ITB Due Date Gulf Coast State College Procurement Office Administration Building, Room 126 5230 West US Highway 98 Panama City, FL 32401 ITB Opened Gulf Coast State College Procurement Office Administration Building, Room 126 5230 West US Highway 98 Panama City, FL 32401
4:00 PM CT	**NOVEMBER 11,2025**	Post Intent to Award Recommendation Addendum (posted on BidNet https://www.bidnetdirect.com/florida/gulfcoaststatecollege)
10:00 AM CT	**NOVEMBER 20, 2025**	District Board of Trustees Meeting / Award Approval William C. Cramer Seminar Room Student Union West Gulf Coast State College 5230 West US Highway 98 Panama City, FL 32401

00 41 00 – BID FORM

DATE: _____

BIDDER: _____
_____
_____

(Each bidder will fill in bidder's name and address in space above.)

TO: THE EXECUTIVE DIRECTOR of PROCUREMENT and AUXILIARY SERVICES, GULF COAST STATE COLLEGE, 5230 WEST HWY 98, PANAMA CITY, FLORIDA32401.

1. Pursuant to and in compliance with your invitation to bid and the contract documents relating to construction of **GULF COAST STATE COLLEGE NURSING SIMULATION CENTER.**

   INCLUDING ADDENDA NO._____

   The undersigned bidder, having become thoroughly familiar with the terms and conditions of the contract documents and with local conditions affecting performance and costs of the work at the place where the work is to be done, and having fully inspected the site in all particulars, hereby proposes and agrees to fully perform the work within the time stated and in strict accordance with the contract documents, for the following sum of money:

   (BASE BID) FOR ALL WORK AS SHOWN:

   _____

   _____DOLLARS $_____

2. Additional Breakout Costs for special components:

   Deduct Alternate No. 1: Dollars $_____
   Deduct Alternate No. 2: Dollars $_____
   Deduct Alternate No. 3: Dollars $_____
   Deduct Alternate No. 4. Dollars $_____

3. I understand that the owner reserves the right to reject this bid but that this bid shall remain open and shall not be withdrawn for a period of 90 days after the date prescribed for its opening.

4. If written notice of the acceptance of this bid is mailed or delivered personally to the undersigned within 90 days after the date set for the opening of this bid, or at any time thereafter before it is withdrawn, the undersigned bidder will execute and deliver the contract documents to the owner in accordance with this bid as accepted, and will also furnish and deliver to the owner all required performance bond, labor and materials payment bond, and proof of insurance coverage required, all within 10 days after personal delivery or deposit in the mail of a notification of acceptance of this bid.

6. If awarded this contract, I agree to complete the work within 548 calendar days of Notice to proceed and to pay liquidated damages as set forth in the Instructions to Bidders for failure to complete the project within the stated time.

7. Notice of acceptance or request for additional information may be addressed to the undersigned at the address set forth below.

8. Wherever in this proposal an amount is stated in both words and figures, in case of discrepancy between words and figures, the words shall prevail.

9. List of Sub-Contractor's proposed for this project will not be required at time of bidding. The low bidder will be required to deliver to the architect's office within 48 hours after time of bid opening, a complete list of subcontractors and material suppliers for approval.

10. The names of all persons interested in the foregoing bid as principals are:

(IMPORTANT NOTICE: If bidder or other interested person is a corporation, give legal name of corporation, state where incorporated and names of the president and secretary of the corporation; if a partnership, give name of the firm and names of all individual co-partners composing the firm; if bidder or other interested person is an individual, give first and last names in full.)

_____

_____

_____

11. The undersigned bidder is licensed in accordance with the requirements of the State of Florida. Contractor will also include a copy of sub-contractor's license upon award of bid.

_____ _____
(Name of Holder) (Certificate No.)

FIRM:_____

BY:_____
(SIGNATURE)

_____
(PRINTED NAME)

TITLE:_____

ADDRESS:_____

_____
CITY, STATE ZIP

PHONE # _____

Attachments:

00 41 01 - ADDENDUM ACKNOWLEDGEMENT
00 41 02 - ANTI-COMMUSION CLAUSE
00 41 03 - CONFLICT OF INTEREST CLAUSE
00 41 04 - DRUG – FREE WORKPLACE CERTIFICATION
00 41 05 - E – VERIFY
00 41 06 - PUBLIC ENITY CRIMES STATEMENT
00 41 07 - AFFIDAVIT REGARDING THE USE OF COERCION FOR LABOR AND SERVICES
00 43 13 - BID BOND
00 43 36 – LIST OF SUBCONTRACTORS
00 60 00 – LABOR AND MATERIAL PAYMENT BOND
00 60 01 – PERFORMANCE BOND
00 70 00 – BUILDING PERMIT
00 73 00 – GENERALCONDITIONS OF THE CONTRACAT FOR CONSTRUCTION & SUPPLEMENTARY CONDITIONS OF THE CONTRACT

This Page Intentionally Left Blank

SECTION 00 41 01 – ADDENDUM ACKNOWLEDGEMENT

I acknowledge receipt of the following addenda:

ADDENDUM NO._____ DATED _____

ADDENDUM NO._____ DATED _____

ADDENDUM NO._____ DATED _____

ADDENDUM NO._____ DATED _____

ADDENDUM NO._____ DATED _____

Name of Firm:_____

Authorized Signature:_____

Printed Name: _____

Title: _____

Date: _____

It is the responsibility of the firm to ensure that they have received addendums if issued. Call (850) 872-3843 or email tgilmore1@gulfcoast.edu prior to submitting your proposal to ensure that you have received addendums.

END OF SECTION 00 41 01

This Page Intentionally Left Blank

SECTION 00 41 02 – ANTI-COLLUSION CLAUSE

Firm certifies that their response is made without prior understanding, agreement or connection with any Corporation, Firm or person submitting a response for the same services and is in all respects fair and without collusion or fraud.

Name of Firm: _____

Authorized Signature: _____

Printed Name: _____

Title: _____

Date: _____

END OF SECTION 00 41 02

This Page Intentionally Left Blank

SECTION 00 41 03 – CONFLICT OF INTEREST DISCLOSURE FORM

For purposes of determining any possible conflict of interest, all firms, must disclose if any District Board of Trustees of Gulf Coast State College(s), employee(s), elected officials(s), of if any of its agencies is also an owner, corporate officer, agency, employee, etc., of their firm.

Indicate either "yes" (a GCSC employee, elected official, or agency is also associated with your firm), or "no". If yes, give person(s) name(s) and position(s) with your firm.

YES_____ NO _____

NAME(S)	**POSITION(S)**
_____	_____
_____	_____
_____	_____
_____	_____
_____	_____

Name of Firm: _____

Authorized Signature: _____

Printed Name: _____

Title: _____

Date: _____

END OF SECTION 00 41 03

This Page Intentionally Left Blank

SECTION 00 41 04 – DRUG-FREE WORKPLACE CERTIFICATION

DRUG FREE WORKPLACE
Section 287.087 Florida Statutes

Preference shall be given to businesses with drug-free workplace programs. Whenever two or more proposals, which are equal with respect to price, quality, and service, are received by the GCSC for the procurement of commodities or contractual services, a proposal received from a business that certifies that it has implemented a drug-free workplace program shall be given preference in the award process.

Established procedures for processing tie bids will be followed if none of the tied vendors have a drug free workplace program. To have a drug-free workplace program, a business shall:

1. Publish a statement notifying employees that the unlawful manufacture, distribution, dispensing, possession, or use of a controlled substance is prohibited in the workplace and specifying the actions that will be taken against employees for violations of such prohibition.

2. Inform employees about the dangers of drug abuse in the workplace, the business's policy of maintaining a drug-free workplace, any available drug counseling, rehabilitation, and employee assistance programs, and the penalties that may be imposed upon employees for drug abuse violations.

3. Give each employee engaged in providing the commodities or contractual services that are under Bid a copy of the statement specified in subsection (1).

4. In the statement specified in subsection (1), notify the employees that, as a condition of working on the commodities or contractual services that are under Bid, the employees will abide by the terms of the statement and will notify the employer of any conviction of, or plea of guilty or nolo contendere to, any violation of Chapter 893 or of any controlled substance law of the United States or any state, for a violation occurring in the workplace no later than five (5) days after such conviction.

5. Impose a sanction on, or require the satisfactory participation in a drug abuse assistance or rehabilitation program if such is available in the employee's community, by an employee who is so convicted.

6. Make a good faith effort to continue to maintain a drug-free workplace through implementation of this section.

As the person authorized to sign the statement, I certify that this firm complies fully with the above requirements.

Name of Firm: _____

Authorized Signature: _____

Printed Name: _____

Title: _____

Date: _____

END OF SECTION 00 41 04

This Page Intentionally Left Blank

SECTION 00 41 05 – E-VERIFY

Vendor/Consultant acknowledges and agrees to the following:

Vendor/Consultant shall utilize the U.S. Department of Homeland Security's E-Verify system, in accordance with the terms governing use of the system, to confirm the employment eligibility of:

1. All persons employed by the Vendor/Consultant during the term of the Contract to perform employment duties within Florida; and

2. All persons, including subcontractors, assigned by the Vendor/Consultant to perform work pursuant to the contract with GCSC.

Name of Firm: _____

Authorized Signature: _____

Printed Name: _____

Title: _____

Date: _____

END OF SECTION 00 41 05

This Page Intentionally Left Blank

SECTION 00 41 06 - PUBLIC ENTITY CRIMES STATEMENT

SWORN STATEMENT UNDER *SECTION 287.133(3)(a), FLORIDA STATUTES*, ON PUBLIC ENTITY CRIMES

THIS FORM **MUST** BE SIGNED IN THE PRESENCE OF A NOTARY PUBLIC OR OTHER OFFICER AUTHORIZED TO ADMINISTER OATHS.

1. This sworn statement is submitted to _____
(print name of the public entity)

by _____
(print individual's name and title)

for _____
(print name of entity submitting sworn statement)

whose business address is _____

_____

and (if applicable) its Federal Employer Identification Number (FEIN) is_____(If the entity has no FEIN, include the Social Security Number of the individual signing this sworn statement:_____.)

2. I understand that a "public entity crime" as defined in Paragraph *287.133(1)(g),* ***Florida Statutes***, means a violation of any state or federal law by a person with respect to and directly related to the transaction of business with any public entity or with an agency or political subdivision of any other state or of the United States, including, but not limited to, any bid or contract for goods or services to be provided to any public entity or an agency or political subdivision of any other state or of the United States and involving antitrust, fraud, theft, bribery, collusion, racketeering, conspiracy, or material misrepresentation.

3. I understand that "convicted" or "conviction" as defined in Paragraph *287.133(1)(b),* ***Florida Statutes***, means a finding of guilt or a conviction of a public entity crimes, with or without an adjudication of guilt, in any federal or state trial court of record relating to charges brought by indictment or information after July 1, 1989, as a result of a jury verdict, nonjury trial, or entry of a plea of guilty or nolo contendere.

4. I understand that an "affiliate" as defined in Paragraph *287.133(1)(a),* ***Florida Statutes***, means:
   1. A predecessor or successor of a person convicted of a public entity crime; or
   2. An entity under the control of any natural person who is active in the management of the entity and who has been convicted of a public entity crime. The term "affiliate" includes those officers, directors, executives, partners, shareholders, employees, members, and agents who are active in the management of an affiliate. The ownership by one person of shares constituting a controlling interest in another person, or a pooling of equipment or income among persons when not for fair market value under an arm's length agreement, shall be a prima facie case that one person controls another person. A person who knowingly enters into a joint venture with a person who has been convicted of a public entity crime in Florida during the preceding 36 months shall be considered an affiliate.

5. I understand that a "person" as defined in Paragraph *287.133(1)(e),* ***Florida Statutes*** means any natural person or entity organized under the laws of any state or of the United States with the legal power to enter into a binding contract and which bids or applies to bid on contracts for the provision of goods or services let by a public entity, or which otherwise transacts or applies to transact business with a public entity. The term "person" includes those officers, directors, executives, partners, shareholders, employees, members, and agents who are active in management of an entity.

6. Based on information and belief, the statement which I have marked below is true in relation to the entity submitting this sworn statement. **(Indicate which statement applies.)**

_____Neither the entity submitting this sworn statement, nor any officers, directors, executives, partners, shareholders, employees, members, or agents who are active in management of the entity, nor any affiliate of the entity has been charged with and convicted of a public entity crime subsequent to July 1, 1989.

_____The entity submitting this sworn statement, or one or more of its officers, directors, executives, partners, shareholders, employees, members, or agents who are active in the management of the entity, or an affiliate of the entity has been charged with and convicted of a public entity crime subsequent to July 1, 1989.

_____The entity submitting this sworn statement, or one or more of its officers, directors, executives, partners, shareholders, employees, members, or agents who are active in the management of the entity, or an affiliate of the entity has been charged with and convicted of a public entity crime subsequent to July 1, 1989.

However, there has been a subsequent proceeding before a Hearing Officer of the State of Florida, Division of Administrative Hearings and the Final Order entered by the Hearing Officer determined that it was not in the public interest to place the entity submitting this sworn statement on the convicted vendor list. **(attach a copy of the final order)**

I UNDERSTAND THAT THE SUBMISSION OF THIS FORM TO THE CONTRACTING OFFICER FOR THE PUBLIC ENTITY IDENTIFIED IN PARAGRAPH 1 (ONE) ABOVE IS FOR THAT PUBLIC ENTITY ONLY AND, THAT THIS FORM IS VALID THROUGH DECEMBER 31 OF THE CALENDAR YEAR IN WHICH IT IS FILED. I ALSO UNDERSTAND THAT I AM REQUIRED TO INFORM THE PUBLIC ENTITY PRIOR TO ENTERING INTO A CONTRACT IN EXCESS OF THE THRESHOLD AMOUNT PROVIDED IN *SECTION 287.017, FLORIDA STATUTES* FOR CATEGORY TWO OF ANY CHANGE IN THE INFORMATION CONTAINED IN THIS FORM.

_____
Signature

Date: _____

STATE OF _____

COUNTY OF _____

PERSONALLY APPEARED BEFORE ME, the undersigned authority, _____ who, after first being sworn by me, **(name of individual signing)** affixed his/her signature in the space provided above on this_____day of_____, 2024.

_____ _____
NOTARY PUBLIC **Notary Stamp**
My commission expires:

Form PUR 7068 (Rev. 04/10/91)

State of Florida
Affidavit Regarding the Use of Coercion for Labor and Services

Respondent Vendor Name:_____ Vendor

FEIN:

Vendor's Authorized Representative Name and Title:_____ Address:

City:_____State: _____ZIP:_____ Phone

Number:

Email Address:

Section 787.06(13), Florida Statutes requires all nongovernmental entities executing, renewing, or extending a contract with a governmental entity to provide an affidavit signed by an officer or representative of the nongovernmental entity under penalty of perjury that the nongovernmental entity does not use coercion for labor or services as defined in that statute.

As the person authorized to sign on behalf of Respondent, I certify that the company identified does not:

- Use or threaten to use physical force against any person;
- Restrain, isolate, or confine or threaten to restrain, isolate, or confine any person without lawful authority and against her or his will;
- Use lending or other credit methods to establish a debt by any person when labor or services are pledged as a security for the debt, if the value of the labor or services as reasonably assessed is not applied toward the liquidation of the debt, the length and nature of the labor or services are not respectively limited and defined;
- Destroy, conceal, remove, confiscate, withhold, or possess any actual or purported passport, visa, or other immigration document, or any other actual or purported government identification document, of any person;
- Cause or threaten to cause financial harm to any person;
- Entice or lure any person by fraud or deceit; or
- Provide a controlled substance as outlined in Schedule I or Schedule II of s. 893.03 to any person for the purpose of exploitation of that person.

Under penalties of perjury, I declare that I have read the foregoing document and that the facts stated in it are true.

By: _____

AUTHORIZED SIGNATURE

Print Name and Title: _____

Date: _____

This Page Intentionally Left Blank

SECTION 00 43 13
BID BOND PENAL SUM FORM

Any singular reference to Bidder, Surety, Owner or other party shall be considered plural where applicable.

BIDDER *(Name and Address):*

SURETY *(Name and Address of Principal Place of Business):*

OWNER *(Name and Address):* Gulf Coast State College 5230 West U.S. Highway 98 Panama City, FL 32405

BID

Bid Due Date: Gulf Coast State College Nursing Simulation Center

Description:

BOND

Bond Number:

Date *(Not earlier than Bid due date):*

Penal sum _____ $ _____

(Words) (Figures)

Surety and Bidder, intending to be legally bound hereby, subject to the terms set forth below, do each cause this Bid Bond to be duly executed by an authorized officer, agent, or representative.

BIDDER	**SURETY**
(Seal)	(Seal)
Bidder's Name and Corporate Seal	Surety's Name and Corporate Seal
By: _____	By: _____
Signature	Signature (Attach Power of Attorney)
_____	_____
Print Name	Print Name
_____	_____
Title	Title
Attest: _____	Attest: _____
Signature	Signature
_____	_____
me	*me*

Note: Above addresses are to be used for giving any required notice. Provide execution by any additional parties, such as joint venturers, if necessary.

EJCDC C-430 Bid Bond (Penal Sum Form)
Prepared by the Engineers Joint Contract Documents Committee.

I. Bidder and Surety, jointly and severally, bind themselves, their heirs, executors, administrators, successors, and assigns to pay to Owner upon default of Bidder the penal sum set forth on the face of this Bond. Payment of the penal sum is the extent of Bidder's and Surety's liability. Recovery of such penal sum under the terms of this Bond shall be Owner's sole and exclusive remedy upon default of Bidder.

2. Default of Bidder shall occur upon the failure of Bidder to deliver within the time required by the Bidding Documents (or any extension thereof agreed to in writing by Owner) the executed Agreement required by the Bidding Documents and any performance and payment bonds required by the Bidding Documents.

3. This obligation shall be null and void if:

3.1 Owner accepts Bidder's Bid and Bidder delivers within the time required by the Bidding Documents (or any extension thereof agreed to in writing by Owner) the executed Agreement required by the Bidding Documents and any performance and payment bonds required by the Bidding Documents, or

3.2 All Bids are rejected by Owner, or

3.3 Owner fails to issue a Notice of Award to Bidder within the time specified in the Bidding Documents (or any extension thereof agreed to in writing by Bidder and, if applicable, consented to by Surety when required by Paragraph 5 hereof).

4. Payment under this Bond will be due and payable upon default of Bidder and within 30 calendar days after receipt by Bidder and Surety of written notice of default from Owner, which notice will be given with reasonable promptness, identifying this Bond and the Project and including a statement of the amount due.

5. Surety waives notice of any and all defenses based on or arising out of any time extension to issue Notice of Award agreed to in writing by Owner and Bidder, provided that the total time for issuing Notice of Award including extensions shall not in the aggregate exceed 120 days from Bid due date without Surety's written consent.

6. No suit or action shall be commenced under this Bond prior to 30 calendar days after the notice of default required in Paragraph 4 above is received by Bidder and Surety and in no case later than one year after Bid due date.

7. Any suit or action under this Bond shall be commenced only in a court of competent jurisdiction located in the state in which the Project is located.

8. Notices required hereunder shall be in writing and sent to Bidder and Surety at their respective addresses shown on the face of this Bond. Such notices may be sent by personal delivery, commercial courier, or by United States Registered or Certified Mail, return receipt requested, postage pre-paid, and shall be deemed to be effective upon receipt by the party concerned.

9. Surety shall cause to be attached to this Bond a current and effective Power of Attorney evidencing the authority of the officer, agent, or representative who executed this Bond on behalf of Surety to execute, seal, and deliver such Bond and bind the Surety thereby.

I 0. This Bond is intended to conform to all applicable statutory requirements. Any applicable requirement of any applicable statute that has been omitted from this Bond shall be deemed to be included herein as if set forth at length. If any provision of this Bond conflicts with any applicable statute, then the provision of said statute shall govern and the remainder of this Bond that is not in conflict therewith shall continue in full force and effect.

11. The term "Bid" as used herein includes a Bid, offer, or proposal as applicable.

EJCDC C-430 Bid Bond (Penal Sum Form)
Prepared by the Engineers Joint Contract Documents Comminee.

SECTION 00 43 36 - SUB-CONTRACTORS FORM

ITB #2-2025/2026

As the Proposer, I submit a listing of the Sub-Contractors, which I shall use to accomplish the Work. Sub-Contractors are listed by name, address, amount of work and item of work. If none, please state so.

Subcontractor Name, Address, & License #:
Work to be performed and amount: $_____
Subcontractor Name, Address, & License #:
Work to be performed and amount: $_____
Subcontractor Name, Address & License #:
Work to be performed and amount: $_____
Subcontractor Name, Address & License #:
Work to be performed and amount: $_____

Name of Firm: _____

Authorized Signature: _____

Printed Name: _____

Title: _____

Date: _____

This form is to be completed and submitted with the Bid.

END OF SECTION 00 43 36

This Page Intentionally Left Blank

+SECTION 00 60 00 - LABOR AND MATERIAL PAYMENT BOND

BY THIS BOND, We, _____as Principal
and _____, a corporation, as Surety, are bound to the DISTRICT
BOARD OF TRUSTEES OF GULF COAST STATE COLLEGE, as College, in the sum of $_____for the payment of which we bind ourselves, our heirs, personal representatives, successors, and assigns, jointly and severally.

Principal and GCSC entered into a contract dated _____, 2024 for_____

_____, which is incorporated by reference.

THE CONDITIONS of this bond is such that

1. If the Principal shall promptly make payment to all persons, firms, subcontractors, and corporations furnishing materials for or performing labor in the prosecution of the work provided for in such Contract, and any authorized extension or modification thereof, including all insurance premiums on said work, and for all labor, performed in such work whether bysubcontractor or otherwise, then this obligation shall be void. Otherwise, it shall remain in full force and effect.
2. If Surety, for value received, hereby stipulates and agrees that no change, extension of time, alteration or addition to the terms of the Contract or to the work to be performed thereunder or the specifications accompanying the same shall in any wise affect its obligation on this bond, and it does hereby waive notice of any such change, extension of time, alteration or addition to the terms of the Contract or to the work or to the specifications.
   Further, no final settlement between GCSC College and the Contractor shall abridge the right of any beneficiary hereunder, whose claim may be unsatisfied.
   Now, therefore, if the Contractor shall promptly make payment to all claimants, defined below, for all labor and material used or required for use in performing the obligations of this Contract, then this obligation shall be null and void; otherwise it shall remain in full force and effect.

   Signed and Sealed this day of _____, 2024.

CORPORATE PRINCIPAL Attest:

By:_____ Seal:

Its: _____

Acknowledged and subscribed on _____, 2024, before the undersigned authority by

_____, as the _____

_____ of the corporation named as Principal and with due authorization of the Corporation.

_____
Notary Public

SURETY Attest:

By: _____ Seal:

Countersigned:

By:_____
Attorney-in-Fact, State of Florida

END OF SECTION 00 60 00

SECTION 00 60 01 – PERFORMANCE BOND

BY THIS BOND, We,_____as Principal and_____, a corporation, as Surety, are bound to the DISTRICT BOARD OF TRUSTEES OF GULF COAST STATE COLLEGE, as College, in the sum of $_____for the payment of which we bind ourselves, our heirs, personal representatives, successors, and assigns, jointly and severally.

THE CONDITIONS of this bond are that if Principal:

1. Performs the contract dated_____, 2024, between Principal and the GCSC College for construction of _____, the contract being made a part of this bond by reference, at the times and in the manner prescribed in the contract; and
2. Promptly makes payments to all claimants, as defined in section *255.05(1), Florida Statutes*, supplying Principal with labor materials or supplies, used directly or indirectly by Principal in the prosecution of the work provided for in the contract; and
3. Pays County all losses, damages, expenses, costs, and attorney's fees, including appellate proceedings, that GCSC sustains because of a default by Principal under the contract; and
4. Performs the guarantee and warranty of all work and materials furnished under the contract for the time specified in the contract, then this bond is void; otherwise it remains in full force.
5. Any action instituted by a claimant under this bond for payment must be in accordance with the notice and time limitation provisions in *Section 255.05(2), Florida Statutes*. Any changes in or under the contract documents and compliance or noncompliance with any formalities connected with the contract or the changes does not affect Surety's obligation under this bond.

The Surety and the Contractor consent and yield to the jurisdiction of the Civil Courts in and for Bay County, Florida.

CORPORATE PRINCIPAL

Attest:

By:_____

Seal:

Its: _____

Acknowledged and subscribed on _____, 2024, before the undersigned authority by

_____, as the _____

_____ of the corporation named as Principal and with due authorization of the Corporation.

_____
Notary Public

SURETY

Attest:

By: _____

Seal:

Countersigned:

By: _____

END OF SECTION 00 60 01

This Page Intentionally Left Blank

SECTION 00 70 00 – BUILDING PERMIT

PART 1 - GENERAL

1.1 SUMMARY

A. THE GENERAL CONTRACTOR WILL BE REQUIRED TO OBTAIN A BUILDING PERMIT FROM CITY OF PANAMA CITY BUILDING SERVICES PRIOR TO COMMENCEMENT OF WORK.

B. SUBMIT TO THE ARCHITECT TWO COMPLETED ORIGINALS OF THE APPLICATION FORM.

C. THE ISSUANCE OF THIS PERMIT DOES NOT PRECLUDE THE REQUIREMENT OF PERMITS BY ANY OTHER AUTHORITIES HAVING JURISDICTION.

D. IN THE EVENT THAT ANY OF THE LISTED SUBCONTRACTORS SHOULD CHANGE DURING THE COURSE OF THE CONTRACT, THE ENTIRE PERMIT APPLICATION WILL HAVE TO BE UPDATED AND A NEW BUILDING PERMIT WILL BE ISSUED.

END OF SECTION

This Page Intentionally Left Blank

SECTION 00 73 00 - SUPPLEMENTARY CONDITIONS OF THE CONTRACT FOR

CONSTRUCTION A201-1997

PART 1 – STANDARD GENERAL CONDITIONS

A. The “General Conditions of the Contract for Construction” of the American Institute of Architects, AIA Document No. A201-1997, inclusive, is a part of this Contract, it is incorporated herein.

B. Additional copies of the “General Conditions” may be purchased from the Florida Association, The American Institute of Architects, Document Department, P. O. Box 10388, Tallahassee, Florida, 32302.

C. The Contractor is hereby specifically directed, as a condition of the Contract, to acquaint himself with the Articles contained therein and to notify and appraise all Subcontractors, Suppliers and any other parties of the Contract or individuals or agencies engaged in the work as to its contents.

D. No contractual adjustments shall be due or become exigent as a result of, or failure on the part of the Contractor to fully acquaint himself and all other parties to the contract with the conditions of Document A201.

PART 2 – SUPPLEMENTARY CONDITIONS

The following supplements modify, change, delete from or add to the "General Conditions of the Contract for Construction", AIA Document A201, Fifteenth Edition 1997. Where a portion of the General Conditions is modified or deleted by these Supplementary Conditions, the unaltered portions of the General Conditions shall remain in effect. Where any Article of the General Conditions is modified or any Paragraph, Subparagraph or Clause thereof is modified or deleted by these supplements, the unaltered provisions of that Article, Paragraph, Subparagraph or clause shall remain in effect.

ARTICLE 1; GENERAL PROVISIONS

1.2 CORRELATION AND INTENT OF THE CONTRACT DOCUMENTS

1.1.1 Add the following to the first sentence:

“and including Bid Bond, Performance Bond and Labor and Material Payment Bond”.

Add the following Subparagraph 1.2.1.1 to 1.2:

1.2.1.1 In the event of conflicts or discrepancies among the Contract Documents, interpretations will be based on the following priorities:

1. The Agreement.
2. Addenda, with those of later date having precedence over those of earlier date.
3. The Supplementary Conditions.

4. The General Conditions of the Contract for Construction.

5. Drawings and Specifications.

In the case of an inconsistency between Drawings and Specifications or within either Document not clarified by addendum, the better quality or greater quantity of Work shall be provided in accordance with the Architect's interpretation.

ARTICLE 2; OWNER

2.2 INFORMATION AND SERVICES REQUIRED OF THE OWNER

Delete Subparagraph 2.2.5 and substitute the following:

2.2.5 The Contractor will be furnished the bid sets of documents returned to the Architect's office or a total of fifteen sets of documents and a disc with PDF files of the complete construction documentsto reproduce at the contractor's expense if additional sets are required.

ARTICLE 3; CONTRACTOR

3.2 REVIEW OF CONTRACT DOCUMENTS AND FIELD CONDITIONS BY CONTRACTOR

Add the following to the end of Subparagraph 3.2.2:

Prior to commencing any excavation or grading, the Contractor shall satisfy himself as to the accuracy of all survey data as indicated in these Drawings and Specifications and/or as provided by Owner. Should the Contactor discover any inaccuracies, errors, or omissions in the survey data, the Contractor shall immediately notify the Architect in order that proper adjustments can be anticipated and ordered.

Add the following Subparagraphs 3.2.4, 3.2.5, 3.2.6, and 3.2.7, to 3.2

3.2.4 If, in Contractor's opinion, any work is indicated on Drawings, or is specified in such as manner as will make it impossible to produce a generally acceptable piece of work, or should discrepancies appear between drawings and specifications, he shall refer it to Architect for decision before proceeding with Work.

3.2.5 If Contractor fails to make such reference, no excuse will thereafter be entertained for failure to carry our work in satisfactory manner. Should a conflict occur in or between Drawings or Specifications, Contractor shall be deemed to have estimated on a more expensive way of doing work unless he shall have asked for and obtained a decision, in writing, from Architect before submission of proposal as to which method or materials will be required.

3.2.6 Figures govern scale dimensions and large-scale drawings govern those of smaller scale. If drawings and specifications conflict or require any clarification that was not obtained prior to bidding, the Contractor shall estimate and include in his bid the more expensive method or material. No deviation shall be made from plans and specifications except upon written order of the Architect.

3.2.7 Contractor shall, within fifteen (15) days after signing of Contract, file with the Architect, a correct, complete itemized schedule of materials and subdivisions of work, giving quantities and unit prices of complete labor and materials.

3.3 SUPERVISION AND CONSTRUCTION PROCEDURES

Add the following Subparagraphs 3.3.4, 3.3.5, 3.3.6, 3.3.7, and 3.3.8 to 3.3:

3.3.4 The Contractor shall furnish sufficient forces, construction plans and equipment, and shall work such hours, including night shifts and overtime operation, as may be necessary to insure the execution of the Work in accordance with the approved progress schedule. If the Contractor falls behind the progress schedule, the Contractor shall take such steps as may be necessary to improve the progress by increasing the number of shifts, overtime operations, days of work and theamount of construction plans, all without additional cost to the Owner.

3.3.5 The Contractor shall not be relieved of obligations to perform the Work in accordance with the Contract Documents either by activities or duties of the Architect in the Architect's administration of the Contract, or by tests, inspections or approvals required or performed by persons other than the Contractor.

3.3.6 The Contractor shall furnish sufficient forces, construction plant and equipment, and shall work such hours, including night shifts and overtime operations, as may be necessary to insure the prosecution of the Work in accordance with the approved progress schedule. If the Contractor falls behind the progress schedule, the Contractor shall take such steps as may be necessary to improve the progress by increasing the number of shifts, overtime operations, days of work and theamount of construction plant, all without additional cost to the Owner.

3.3.7 Failure of the Contractor to comply with the requirements under this provision shall be grounds for determination by the Architect that the Contractor is not executing the Work with such diligence as will ensure completion within the time specified and such failure may constitute a substantial violation of the conditions of the Agreement.

3.3.8 Upon such determination, the Owner may terminate the Contractor's right to proceed with the Work, or any separable part thereof, in accordance with Article 14 of the General Conditions, or may with hold further payments as indicated in Article 9.5.1 also of the General Conditions.

3.4 LABOR AND MATERIALS

Add the following Subparagraphs 3.4.4, 3.4.5, 3.4.6 and 3.4.7 to 3.4:

3.4.4 After the Contract has been executed, the Owner and the Architect will consider a formal request for the substitution of products in place of those specified only under the conditions set forth in the General Requirements (Division 1 of the Specifications), Section "Product Requirements.".

3.4.5 By making requests for substitutions based on Subparagraph 3.4.4 above, the Contractor:

1. Represents that the Contractor has personally investigated the proposed substitute product and determined that it is equal or superior in all respects to that specified;

2. Represents that the Contractor will provide the same warranty for the substitution that the Contractor would for that specified;

3. Certifies that the cost data presented is complete and includes all related costs under this Contract, including the Architect's or Engineer's redesign costs, and waives all claims for additional costs related to the substitution which subsequently become apparent; and

4. Will coordinate the installation of the accepted substitute, making such changes as may be required for the Work to be complete in all respects.

3.4.6 The Contractor shall follow all specified and manufacturer's standards for Delivery, Storage and

Handling of all products. All products that require storage in a climate-controlled environment shall be so handled. In all cases the more stringent guidelines shall be followed.

3.4.7 The Contractor shall follow all specified and manufacturer's instructions and conditions for installation of all products and finishes.

3.5 WARRANTY

ADD THE FOLLOWING SUBPARAGRAPHS 3.5.2, 3.5.3 and 3.5.4 to 3.5

3.5.2 The warranty provided in this paragraph shall be in addition to and not in limitation of any other warranty or remedy required by law or by the Contract Documents.

3.5.3 The Contractor shall provide the Owner with written warranties covering the work for the periods of time specified in the Contract Documents. As a minimum the work will be guaranteed against defects in materials and workmanship for one year from the date of final acceptance of the project by the Owner with all mechanical equipment compressors guaranteed for five years from the date of final acceptance. The date of final acceptance shall be the beginning date of all warranties (see Article 8).

3.5.4 Year-End Inspection: A year-end inspection shall be conducted jointly by the Architect, his consultants and the Contractor prior to the end of the year after completion and upon notification by the Contractor. All defects of materials and workmanship noted at that time shall be corrected. Nothing contained herein shall be deemed to imply that guarantees apply to work which has been abused or neglected by the Owner.

3.6 TAXES

Add the following Subparagraph 3.6.2 to 3.6

3.6.2 Although the Owner is not subject to the Florida Sales and Use Tax, any Contractor who purchases materials which will be used in the construction of a publicly owned building will not be exempt from the sales tax on those materials as evidenced by the following except from the Florida Statues:

"The State, any county, municipality or political subdivision of this state is exempt from the sales tax, except this exemption shall not include the sales of tangible personal property made to contractors employed either directly or as agents of such government or political subdivision thereof when such tangible personal property going into or becomes a part of public works owned by such government or political subdivision thereof."

The Owner will take advantage of large purchases of materials through a Direct Purchase Agreement in accordance with the procedures the Board has established as described in 01 28 00 Direct Material Purchase procedure.

3.7 PERMITS, FEES AND NOTICES

ADD THE FOLLOWING SUBPARAGRAPHS 3.7.5 TO 3.7:

3.7.5 The Contractor shall meet the latest requirements of the United States Department of Labor Occupational Safety and Health Standards and comply with The Manual of Accident Prevention in Construction, all applicable safety and sanitary laws, regulations, and ordinances and any safety rules or procedures.

3.9 SUPERINTENDENT

Delete Subparagraph 3.9.1 and substitute the following:

3.9.1 The Contractor shall employ and keep at the site of the work during its progress a competent and thoroughly experienced superintendent capable of handling all phases of the project. The Superintendent shall have any necessary assistants, foremen and timekeepers required by the scope of this project, and shall be acceptable to the Architect, and shall not be changed or transferred unless approved by the Architect or ceases to be in the employ of the Contractor. If the Contractor must replace the Superintendent for any reason between "Notice-to-Proceed" and final Architect's certification of completion of the work, then the Contractor shall notify Architect that the existing Superintendent will be leaving the job on a specific date and that all job work shall cease after said date until a satisfactory replacement Superintendent is found, acceptable to the Architect, and physically present on the site, properly authorized and briefed by Contractor.

Add the following Subparagraphs 3.9.2, 3.9.3, 3.9.4, 3.9.5, 3.9.6 and 3.9.7 to 3.9:

3.9.2 The Superintendent shall represent the Contractor in the Contractor's absence and all directions given to the Superintendent shall be binding as if given to the Contractor. Major and important directions shall be confirmed in writing to the Contractor. Other directions shall be so confirmed on written request in each case.

3.9.3 The Contractor shall submit to the Architect the name and resume of the proposed Superintendent for the Contractor at the preconstruction conference to allow investigation by Architect. The superintendent shall attend the Pre-Construction Conference and all Progress Meetings.

3.9.4 The Contractor shall be responsible to the Owner for acts and omissions of the Contractor's employees, Subcontractors and their agents and employees, and other persons performing portions of the Work under a contract with the Contractor.

3.9.5 The Superintendent will remain on the job until punch list items are corrected.

3.9.6 The Contractor shall give efficient supervision to the work, using the best skill and attention. The Contractor shall carefully study and compare all drawings, specifications and other instructions and shall report at once to the Architect any error, inconsistency or omission which is discovered but shall not be held responsible for their existence or discovery. The Superintendent shall be in attendance on the job a minimum of six (6) hours per working day from "Notice to Proceed" continuously through final approval of the work by the Architect. No work shall be allowed to transpire on the site unless the Superintendent is in attendance at the site.

3.10 CONTRACTORS CONSTRUCTION SCHEDULES

3.10.4 The contractor shall furnish, not later than 7 days of date established for commencement of work, a bar-chart schedule showing the expected times of completion of the various stages of work on this project. The work headings therein shall correspond generally with the headings listed in the Contractor's Schedule of Values. During progress of the work the Contractor shall enter on the schedule the actual progress at the end of each month and shall deliver two (2) copies to the Architect along with the Contractor's pay request. Contractor's pay request will not be processed until receipt and review of monthly updated bar-chart schedule.

3.11 DOCUMENTS AND SAMPLES AT THE SITE

Add the following Subparagraph 3.11.2 to 3.11:

3.11.2 Copy of Toxic Substance List submitted by both the Contractor and Subcontractors to the Owner, must be kept at the site during the duration of construction.

3.12 SHOP DRAWINGS, PRODUCT DATA AND SAMPLES

Add the following Subparagraphs 3.12.11, 3.12.12 and 3.12.13 to 3.12:

3.12.11 Shop Drawings and samples shall be dated and contain the following: name of project; project number; description or names of equipment, materials and items; and complete identification of locations at which materials or equipment are to be installed. If the shop drawings do not conform completely to the requirements of the Contract Documents, such nonconformance shall be specifically noted on the face of the drawings. Refer to Division 1 Section "Submittal Procedures."

3.12.12 Submission of Shop Drawings and samples shall be accompanied by transmittal letter, containing project name, Contractor's name, number of drawings and samples, titles and other pertinent data.

3.12.13 Unless otherwise specified, the number of Shop Drawings and the number of Samples which the Contractor shall submit and, if necessary, resubmit, is the number that the Contractor requires to be retained for the Contractor's use plus 2, which will be retained by the Architect/Engineer.

3.13 USE OF SITE

Add the following Subparagraphs 3.13.2 to 3.13:

3.13.2 Contractor shall access the Project site from roadways, right of way, easements or temporary roadways as authorized by the Owner and shall limit construction traffic from residential areas by utilizing through streets within commercial districts. Use of multiple project site access points shall be at the discretion of the Owner.

The Contractor shall present a plan, for approval by the Architect and Owner, showing all areas for safety fencing staging, storage, job office, ingress and egress to the site. No work shall be done until this is approved.

3.15 CLEANING UP

Add the following to the end of Subparagraph 3.15.1:

3.15.1 Keep interior of the building and keep the area around the building free of stored or unattended combustible materials.

3.18 INDEMNIFICATION

Comply with the Florida Statues, 725.06 Construction Contracts; Limitation on Indemnification.

Delete Subparagraph 3.18.1 and substitute with the following:

3.18.1 To the fullest extent permitted by law, the Contractor shall, for the sum of ten dollars $10.00) and other good and valuable consideration paid by the Owner and the Architect/Engineer individually, receipt hereby acknowledged by the Contractor, Indemnify and hold harmless the Owner, Triumph Gulf Coast, Inc. and the Architect/Engineer and their agents and employees from and against all claims, damages, losses and expenses, including but not limited to attorneys' fees arising out of or resulting from the performance of the Work provided that any such claim, damage, loss or expense: (1) is attributable to bodily injury, sickness, disease or death, or to injury to or destruction of tangible property other than the Work itself, including the loss of use resulting therefrom and (2) is caused in whole or in part by any negligent act or omission of the Contractor, any subcontractor, anyone directly or indirectly employed by any of them, or anyone whose acts any of them may be liable, regardless of whether or not it is caused in part by a party indemnified hereunder. Such obligation shall not be construed to negate, abridge or otherwise reduce any other right or obligation of indemnity which would otherwise exist as to any party or person described in this Paragraph 3.18.

Delete Subparagraph 3.18.2 and substitute the following:

3.18.2 The indemnification which the Contractor and Subcontractors are to provide under Paragraph 3.18 shall include, extend and insure to and be for the benefit of the Owner, Architect, their respective agents, and employees of any of them, and shall not be limited in any way by any limitation on theamount of type of damage, compensation or benefits payable by or for the Contractor or any Subcontractor under Worker's Compensation or Employer's Liability Acts, disability acts, employeebenefit acts or other legislation or rule of law, whether legislative, judicial, administrative or commonlaw.

ARTICLE 4; ADMINSTRATION OF THE CONTRACT

4.01 ARCHITECT

Add the following subparagraphs 4.1.4 to 4.1:

4.1.4 Nothing contained in the Contract Documents shall create any contractual relationship between the Architect and the Contractor.

Add the following subparagraph 4.6.7:

4.6.7 Notwithstanding any provision contained in the Contract Documents or elsewhere, neither party tothis contract shall be required to submit to arbitration any claim, dispute or other matter arising outof or relating to the Contract Documents, the Contract or performance thereof.

ARTICLE 5; SUBCONTRACTORS

5.3 SUBCONTRACTURAL RELATIONS

Add the following subparagraph 5.3.2 to 5.3:

5.3.2 The Subcontractor agrees, to the fullest extent permitted by law, to indemnify, save harmless and defend the Contractor, Owner, Architect, Architect's consultants, their respective agents, and employees of any of them harmless from any liability for damages to any person or property upon, or at, or about the project, that may arise as a result of or in connection with the work hereunder, provided, however, that the Subcontractor shall not be required to indemnify the Contractor against the Contractor's sole negligence; and the Subcontractor agrees to procure at his own expense, before the commencement of the work comprehensive general liability including contractor's protective liability insurance, completed operations and contractual liability insurance and automobile liability insurance, including the ownership, maintenance, and operation of any automotive equipment owned, hired and non-owned for the benefit of the Contractor and Owner, in the sum of Two Hundred Fifty Thousand ($250,000.00) Dollars for damages resulting to one person and Five Hundred Thousand ($500,000.00) Dollars for damages to persons resulting from one casualty, and Two Hundred Fifty Thousand ($250,000.00) Dollars for damages to property arising out of each casualty, and an aggregate of not less than Five Hundred Thousand ($500,000.00) Dollars for damages to property, and to keep such insurance in force until the construction of the project is fully completed, and to immediately and before commencing work deliver such policy or policies or certificates of such insurance to the Contractor.

ARTICLE 7; CHANGES IN THE WORK

7.2 CHANGES IN THE WORK

Add the following Subparagraph 7.2.3, 7.2.4, 7.2.5, 7.2.6, 7.2.7 and 7.2.8 to 7.2:

7.2.3 The Contractor is responsible for all affected work that is a result of a Change Order. All changes required as a result of a Change Order should be reflected in the price of the Change Order. Any

associated additional work that becomes evident after the Change Order has been signed will be made at the Contractor's expense.

7.2.4 When any one change increases or decreases the scope of the original contract, the proposal to change shall be supported by accurate cost data establishing the fair and current market valve of the labor, materials, equipment, and incidentals required to accomplish the change, plus a margin to represent the contractor's profit and overhead. Cost data shall be in sufficient detail to enable the Architect or Engineer to confirm the accuracy of such proposal. Profit and overhead shall be added to additive change orders and shall be deducted on deductive change orders. No deduction shall be made for profit and overhead on deductive change orders in connection with Direct Material Purchases.

7.2.5 Cost shall be limited to the following: Cost of materials, including sales tax and cost of delivery, cost of labor, including Social Security, Old Age and Unemployment Insurance; Worker's Compensation Insurance; rental value of power tools and equipment. Overhead shall include the following: Bond premiums, supervision, superintendence, wages of timekeepers, watchmen and clerks, small tools, incidentals, general office expense and all other expenses not included in "cost." If the net value of a change results in a credit from the Contractor or Subcontractor, the credit given shall be the net cost plus overhead and profit except for Direct Material Purchase items. The cost as used herein shall include all items of labor, materials and equipment.

7.2.5.1 The allowance for overhead and profit combined, included in the total cost to the Owner, shall be based upon the following schedule:

1. For the Contractor, for any work performed by his own forces: 15% of the cost.

2. For each Subcontractor involved, work performed by his own forces: 10% of the cost.

3. For the Contractor, for work performed by his Subcontractor: 5% of the amount of the Subcontractor.

4. The cost of the bond shall be added, or deducted in the case of a credit, in the same percentage as the cost of the bond purchased for the project. Any bond cost for a Subcontractor will not be allowed.

5. In order to facilitate checking of quotations for extras or credits, all proposals, except those so minor that their propriety can be seen by inspection, shall be accompanied by a complete itemization of costs including labor, materials and subcontracts. Labor and materials shall be itemized in the manner prescribed above. Where major cost items are subcontracts, they shall be itemized also. In no case will a charge over $100.00 be approved without such itemization.

6. Overhead shall include small tools, incidentals, general office and field office expenses, estimating, data entry and all other expenses not included in "cost."

7.2.6 The Contractor shall not be entitled to any claim for damages or cost including loss of profits, loss of use, overhead expenses, equipment rental, etc. on account of hindrances or delays from any cause whatsoever. If the hindrance or delay is caused by any act of God, or by any act or omission on the part of the Owner, Owner's agents, or governmental agencies having jurisdiction, such act, hindrance, or delay may entitle the Contractor to an extension of time only in which to complete the work which shall be determined by the Architect and approved by the Board, provided that the Contractor will give written notice as provided herein of the cause of such act, hindrance, or delay.

7.2.7 Should concealed conditions encountered in the performance of the work below the surface of the ground be at variance with the conditions indicated by the Contract Documents be encountered, the

Contract Sum shall be equitable adjusted by Change Order upon claim by either party made within five days after the first observance of the conditions.

7.3 CONSTRUCTION CHANGE DIRECTIVES

Delete first sentences of Subparagraph 7.3.6 and substitute the following:

7.3.6 If the Contractor does not respond promptly or disagrees with the method for adjustment in the Contract Sum, the method and the adjustment shall be determined by the Architect on the basis of reasonable expenditures and savings of those performing the Work attributable to the change, including, in case of an increase in the Contract Sum, an allowance for overhead and profit in accordance with Clauses 7.3.10.1 through 7.3.10.6.

Delete Subparagraph 7.3.6.5 and substitute the following:

7.3.6.5 Cost of supervision and field personnel may be allowed when a contract time extension is allowed, which is directly attributed to the change.

ARTICLE 8; TIME

8.2 PROGRESS AND COMPLETION

Add the following Subparagraph 8.2.4 and 8.2.5 to 8.2:

8.2.4 The work to be performed under the Contractor's Base Proposal as defined in the Contract Documents shall be substantially completed within **548 days**.

8.2.5 Failure to complete the Project within the time fixed in this Agreement will result in substantial injury to the Owner, and as damages arising from such failure cannot be calculated with any degree of certainty, according to the definition of " Substantial Completion" in Subparagraph 9.8.1 of the General Conditions, within the time fixed or within such further time, if any, as maybe authorized in accordance with Contract Documents, the Contractor shall pay to the Owner as Liquidated Damages for such delay, and not as a penalty, **$1,000.00** for each and every calendar day elapsing between the date fixed for Substantial Completion and the date such Substantial Completion shall be fully accomplished. It is also hereby agreed that if after thirty (30) Calendar days after Substantial Completion this Project is not fully and finally completed in accordance with the requirements of the Contract Documents, the Contractor shall pay to the Owner as Liquidated Damages, and not as a penalty, for such delay, the rate previously indicated. These Liquidated Damages shall be payable in addition to any expenses or costs payable by the Contractor to the Owner under the provision of the Contract Document and shall not exclude the recovery of damages of the Owner under the Contract Documents.

This provision of Liquidated Damages for delay shall in no manner affect the Owner's right to terminate the Contract. The Owner's exercise of the right to terminate shall not release the Contactor from his obligation to pay Liquidated Damages. It is further agreed that the Owner may deduct from the balance of the Contract Sum held by the Owner the Liquidated Damages stipulated herein or such portions, as said balance will cover.

8.3 DELAYS AND EXTENSIONS OF TIME

Add the following Clause 8.3.1.1 to Subparagraph 8.3.1:

8.3.1.1 Extension of Time

Extensions on all additions will be granted only to such conditions are in excess of the average for that period and also that the weather actually affects operations.

Add the following to the end of Subparagraph 8.3.2:

Extension of time requests due to adverse weather shall be submitted within twenty (20) days after adverse weather. The Contractor shall submit the referenced climatologically summary data immediately upon its availability and shall show how the time extension request corresponds with the climatological data. Extension of contract time due to adverse weather shall be for "time only" and will not be the basis of any monetary claim or request for "extended general conditions." Refer to Section 00 73 80 "Weather Delay."

Add the following subparagraphs 8.3.4, 8.3.5, 8.3.6, 8.3.7, 8.3.8, 8.3.9 and 8.3.10 to 8.3:

8.3.4 The Contract Time shall be extended by Change Order for such reasonable time as the Architect may determine and as approved by the Owner.

8.3.5 All Claims for extension of time, including weather delays, shall be made in writing to the Architect no more than seven days after the Occurrence of the delay; otherwise, they shall be waived. In the case of a continuing delay only one claim is necessary.

8.3.6 It is mutually agreed between the parties that time is of the essence of this contract, and that there will be, on the part of the Owner considerable monetary damage in the event the work is not completed within the time fixed for completion in the Contract or within the time to which such completion may have been extended.

8.3.7 The amount per calendar day set forth herein for each day that said Contract is not completed is hereby agreed upon as the liquidated damages for each and every calendar day that the time consumed in completing the work under the contract exceeds that time allowed, therefore.

8.3.8 The amount shall, in no event, be considered as a penalty or otherwise than as liquidated and adjusted damages to the Owner of the said Project, and the Contractor and his sureties shall be liable, therefore.

8.3.9 The Contractor agrees to make no claim for damages for delay in the performance of the contract occasioned by any act or omission of the Owner or any of its agents or representatives, or because of any injunction which may be brought against the Owner and agrees that any such claim shall be fully compensated for by an extension of time to complete performance of the Work as provided herein.

8.3.10 No extension of time beyond the date of completion fixed by terms of the Contract shall be effective unless in writing, submitted to the Architect, and approved by Owner. The determination made by the Owner on an application for an extension of time shall be binding and conclusive on the Contractor.

ARTICLE 9; PAYMENTS AND COMPLETION

9.3 APPLICATIONS FOR PAYMENT

Add the following subparagraph 9.3.1.4 to 9.3:

9.3.1.4 The full Contract retainage may be reinstated if the manner of completion of the Work and its progress do not remain satisfactory to the Architect (or if the Surety withholds its consent), or for other good and sufficient reasons.

9.4 CERTIFICATES FOR PAYMENT

Add the following paragraphs:

9.4.3 The Architect shall certify a payment of ninety percent (90%) of the value of the Work and materials as above noted according to his best judgement of the correct amount.

9.4.4 On these monthly certificates, ten percent (10%) of the total of the estimated work for that month shall be retained until completion and acceptance of the job.

9.4.5 Upon substantial completion of the job, the Architect may issue a semi-final certificate covering payment up to ninety percent (90%) of the Contract Sum less any reserves to cover any incomplete items.

9.7 FAILURE OF PAYMENT

Add the following article to 9.7:

9.7.2 PAYMENTS TO SUBCONTRACTORS

9.7.2.1 If the Architect fails to issue a Certificate for Payment for any cause which is the fault of the Contractor and not the fault of a particular Subcontractor, the Contractor shall pay that Subcontractor on demand, made at any time after the Certificate for Payment should otherwise have been issued for his work to the extent completed, less the retained percentage.

9.7.2.2 The Contractor shall pay each Subcontractor a just share of any insurance moneys received by the Contractor under Article 11, and he shall require each Subcontractor to make payments to his subcontractors.

9.7.2.3 The Architect will, on request, furnish to a Subcontractor, if practicable, information regarding percentages of completion or amounts applied for by the Contractor and action taken thereon by the Architect and Owner on account of portions of the Work done by such Subcontractor.

9.7.2.4 Neither the Owner nor the Architect shall have any obligation to pay or to see the payments of any moneys to any Subcontractor except as may otherwise be required by Florida Statutes. Payment to material suppliers shall be treated in a manner similar to that provided in Subparagraphs 9.7.2.1, 2, and 3.

9.6 PROGRESS PAYMENTS

Add the following subparagraph 9.6.8 to 9.6:

9.6.8 Should the contractor fail to complete his contract work by the completion date as stated in his contract, the Owner will suspend all further payments on the contract, until all work on the contract is substantially completed and has been accepted by the Owner.

ARTICLE 10; PROTECTION OF PERSONS AND PROPERTY

10.6 EMERGENCIES

ADD THE FOLLOWING SUBPARAGRAPH 10.6.2 TO 10.6:

10.6.2 The Contractor shall provide at the site, and make available to all workers, medical supplies and equipment necessary to supply first aid service to all persons injured in connection with the work. The Contractor shall report any and all accidents in writing to Insurance Company, Owner and Architect within twenty-four (24) hours of the occurrence. The report shall contain the following information and it shall be the responsibility of the Contractor to have an accident report filled out in

triplicate and submitted as required above with (1) Name of Person or Persons and Home Address, (2) Location of Occurrence, (3) Time of Day and Date, (4) Description of Occurrence, (5) Statements of Witnesses and (6) Signature of Contractor's Superintendent. In addition, if death or serious injuries or serious damages are caused, the accident shall be reported immediately by telephone or messenger. If any claim is made by anyone against the Contractor or any Subcontractor on account of any accident, the Contractor shall promptly report the facts in writing to the Owner, giving full details of the Claims.

ADD THE FOLLOWING SUBPARAGRAPH 10.7:

10.7 STATE OF FLORIDA TOXIC SUBSTANCE ACT:

(Worker's Right to Know Law), Chapter 442, Florida Statutes; Contractors shall comply with all of the requirements of The Florida Toxic Substance Act, as amended (The "Act"), specifically, but not limited substance in construction, repair or maintenance of Public School Facilities.

A. All toxic substance enumerated in The Florida Substance List established pursuant to S. 442.103 Florida Statutes, that are to be used in the construction, repair of maintenance of Educational Facilities are restricted to usage according to the following provision:

Before any substance may be used, the Contractor shall notify the Superintendent, the Director of Maintenance and the Architect/Engineer in writing at least ten (10) working days prior to using the substance. The notification shall contain:

(1) The name of the substance to be used.

(2) Where the substance is to be used.

(3) When the substance is to be used.

There shall be attached to the notification a copy of a Material Safety Data Sheet as defined in S. 442.102, Florida Statutes, for each substance.

B. The Contractor shall comply with, the safety precautions and handling instructions set forth in the Material Safety Data Sheet for each substance used by the Contractor so that usage of the substance poses no threat to the health and safety of the students, school personnel and the general public.

ARTICLE 11; INSURANCES AND BONDS

11.1 CONTRACTOR'S LIABILITY INSURANCE

Delete Subparagraph 11.1.1 and substitute the following:

11.1.1 The Contractor shall purchase from and maintain in a company or companies lawfully authorized to do business in the State of Florida such insurance as will protect the Contractor from claims set forth below which may arise out of or result from the Contractor's operations under the Contract and for which the Contractor may be legally liable, whether such operations be by the Contractor or by a Subcontractor or by anyone directly or indirectly employed by any of them, or by anyone for whose acts any of them may be liable. All insurance policies shall be issued and countersigned by representatives of such companies duly authorized for the State of Florida and shall be written on ISO standard forms or their equivalents. The Contractor shall provide the ISO Commercial General Liability policy for general liability coverage. All liability policies shall provide that the Owner is a named additional insured as to the operations of the Contractor under the Agreement and shall provide for the Severability of Insureds Provision. The Owner shall be exempt from, and in no way

liable for, any sums of money, which may represent a deductible in any insurance policy. The payment of such deductible shall be the responsibility solely of the Contractor and/or Subcontractor providing such insurance. The insurance shall protect the Contractor from the following claims:

.1 claims under workers' or workmen compensation, disability benefit and other similar employee benefit acts, which are applicable to the Work to be performed;

.2 claims for damages because of bodily injury, occupational sickness or disease, or death of the Contractor's employees;

.3 claims for damages because of bodily injury, sickness or disease, or death of any person other than the Contractor's employees;

.4 claims for damages insured by usual personal injury liability coverage including claims, which are sustained (1) by a person as a result of an offense directly or indirectly related to employment of such person by the Contractor, or (2) by another person;

.5 claims for damages, other than to the Work itself, because of injury to or destruction of tangible property, including loss of use resulting therefrom;

.6 claims for damages because of bodily injury, death of a person or property damages arising out of ownership, maintenance or use of a motor vehicle; and

.7 claims involving contractual liability insurance applicable to the Contractor's obligations under Paragraph 3.18.

Delete Subparagraph 11.1.2 and substitute the following:

11.1.2 .1 The insurance required by Subparagraph 11.1.1 shall be written for not less than limits of $250,000 per person, $500,000 per occurrence or a minimum of $500,000 combined single limit. Coverages, whether written on an occurrence or claims-made basis, shall be maintained without interruption from date of commencement of the Work until date of final payment and termination of any coverage required to be maintained after final payment. The insurance required by Subparagraph 11.1.1 shall include contractual liability insurance applicable to the Contractor's obligations under Paragraph 3.18 and coverage for the "XCU" exposure.

.1 Worker's Compensation: The Contractor shall secure and maintain for the life of this Agreement, valid Worker's Compensation Insurance as required by Chapter 440, Florida Statutes. Copies of the insurance policy shall be filed with the Owner no later than 60 days after execution of the Owner-Contractor Agreement.

.2 Automobile Liability: The Contractor shall secure and maintain, during the life of this Agreement, Automobile Liability insurance on all vehicles against bodily injury and property damage in at least the amounts of $100,000 per person, $300,000 per occurrence, and property damages in at least the amount of $100,000; or combined single limit of $300,000 for bodily injury and property damage.

Delete Subparagraph 11.1.3 and substitute the following:

11.1.3 Certificates of Insurance acceptable to the Owner shall be filed with the Owner prior to commencement of the Work. These Certificates and the insurance policies required by this Paragraph 11.1 shall contain a provision that coverages afforded under the policies will not be cancelled or allowed to expire until at least 30 days' prior written notice has been given to the Owner. If any of the foregoing insurance coverages are required to remain in force after final

payment an additional certificate evidencing continuation of such coverage shall be submitted with the final Application for Payment as required by Subparagraph 9.10.2. The Contractor shall furnish one copy each of Certificates of Insurance for each copy of the Agreement which shall specifically set forth evidence of all insurance coverage required by the Contract Documents. The Certificate of Insurance shall be dated and show the name of the insured Contractor, the specific job by name and job number, the name of the insurer, the number of the policy, its effective date, and its termination date. The Contractor shall furnish a copy of the insurance policy to the Owner within 60 days following execution of the Agreement. If the Acord form certificate is used, the Supplemental Attachment form, AIA document G715, shall be completed, signed by Contractor's insurance representative and attached to the Acord certificate.

Add the following subparagraphs 11.1.4, 11.1.4.1, 11.1.4.2, 11.1.4.3, 11.1.4.4, 11.1.4.5, 11.1.4.6, 11.1.4.7, 11.1.4 .8, 11.1.4.9, 11.1.4.10 and 11.1.4.11 to 11.1:

11.1.4 The insurance required by Subparagraph 11.1.1 shall be written for not less than any limits of liability set forth below, required by Law or set forth in the Contract Documents, whichever is greater. Other types as may be required by the Project Specifications shall also be furnished.

11.1.4.1 FURNISH TO THE OWNER A LETTER FROM THE INSURANCE COMPANY STATING THAT ALL REQUIRED INSURANCE HAS BEEN COMPLIED WITH AS SPECIFIED.

11.1.4.2 THE OWNER, AND THE ARCHITECT, DAG Architects Inc. shall be named as an ADDITIONAL INSURED on the Contractor's general liability policies. (Being named as Certificate Holder is not acceptable).

11.1.4.3 INSURANCE MUST BE MAINTAINED FOR ONE (1) YEAR AFTER FINAL PAYMENT if written on a claims-made basis.

11.1.4.4 All insurance shall contain provision that coverage afforded under the policies SHALL NOT BE CANCELED OR MODIFIED UNTIL A MINIMUM OF FIFTEEN (15) DAYS PRIOR WRITTEN NOTICE TO OWNER HAS BEEN GIVEN, AND THIS PROVISION SHALL BE NOTED ON CERTIFICATES OF INSURANCE.

11.1.4.5 Deliver to the Architect, before work commences, two (2) certificates evidencing compliance with all required insurance, using AIA Document G705, Certificate of Insurance.

11.1.4.6 Insurance required shall include Contractual Liability Insurance applicable to the Contractor's obligations under Article 3.

11.1.4.7 Property Insurance coverage shall include coverage of perils of windstorms, fire, lightning vandalism, malicious mischief and those included in extended coverage in the amount of one hundred percent (100%) of the values at risk. Extended coverage, vandalism, and malicious mischief insurance may contain the standard deductibles.

11.1.4.8 Contractor shall maintain valid Worker's Compensation Insurance as required by Chapter 440, Florida Statutes. All Subcontractors shall maintain valid Worker's Compensation as required by Florida Statutes.

11.1.4.9 Contractor shall maintain Public Liability Insurance against bodily injury, personal injury and property damage, in limits as specified. Coverage shall include Comprehensive General Liability and Products and Completed Operations Liability.

11.1.4.10 The amounts set forth herein and by Law shall apply equally or whether on or off the site of the Work.

11.1.4.11 Unless otherwise provided in the Contract Documents, property insurance shall cover portions of the Work stored off the site after written approval of the Owner at the value established in the approval, and also portions of the Work in transit.

11.5 PERFORMANCE BOND AND PAYMENT BOND

Delete Subparagraph 11.5.1 and substitute the following:

11.5.1 The Contractor shall furnish the Owner a Performance Bond equal to one hundred percent (100%) of the contract price. The Performance Bond shall extend as a guarantee bond for one (1) year after final acceptance of the Work, or until specified guarantees, which exceed one year are satisfied. The Contractor shall furnish a Labor and Material Payment Bond equal to one hundred percent (100%) of the contract price.

Add Subparagraph 11.5.3 with the following:

11.5.3 BOND REQUIREMENTS

A. Prior to execution of the Contract, the Bidder shall furnish bonds covering the faithful performance of the Contract and the payment of all obligations arising there under in such form and amount as stated hereafter. Bonds may be secured through the Bidder's usual sources.

B. To be acceptable to the Owner as Surety for Bid Bonds and Performance and Payment Bonds a Surety Company shall comply with the following provisions:
1. The surety company must be admitted to do business in the State of Florida.
2. The surety company shall have been in business and have record of successful continuous operations for at least five (5) years.
3. The surety company shall have at least the following minimum ratings:

CONTRACT AMOUNT	POLICY HOLDERS RATING
Performance Bond equal 100% of Contract Price	A To

4. Best's Policyholder's Rating of "A" and "B" (which signifies A = Excellent, and B = Good, based upon good underwriting, economic management, adequate reserves for undisclosed liabilities, net resources for unusual stock and sound investment) or an equivalent rating from the Insurance commissioner if not rated by Best's.
5. The Surety Company shall not expose itself to any loss on any one risk in an amount exceeding ten percent (10%) of its surplus policy holders, provided:
   a. Any risk or portion of any risk shall have been reinsured (in which case these minimum requirements contained herein also apply to the reinsuring carrier) in assuming insurer authorized or approved by the Insurance Commissioner to do business in this State shall be deducted in determining the limitation of risk prescribed in this section.
   b. In the case of a surety insurance company, there shall be deducted in addition to the deduction for reinsurance, the amount assumed by any co-surety.

ADD THE FOLLOWING ARTICLES:

11.6 INSURANCE REQUIREMENTS (MINIMUM)

11.6.1 WORKER'S COMPENSATION

Applicable	Per Florida Statute – Chapter 440
Railroad Required	NO
Maritime Required	NO
Employer's Liability	500,000

11.6.2 CONTRACTOR'S LIABILITY INSURANCE including CONTRACTUAL LIABILITY

Form of Insurance shall be:

Comprehensive General Liability, Premises and Completed Operations, Contractual Liability, Broad Form.

a.	BODILY INJURY	
	Each Occurrence	$1,000,000
	Aggregate	2,000,000
b.	PROPERTY DAMAGE	
	Including Complete Operations	
	Broad Form	Yes
	Each Occurrence	1,000,000
	Aggregate	2,000,000
c.	PERSONAL INJURY (WITH EMPLOYMENT EXCLUSION DELETED)	
	Each Occurrence	1,000,000
	Aggregate	2,000,000
d.	XCU COVERAGE included	Yes

11.6.3 MOTOR VEHICLE LIABILITY – Owned, Non-Owned and Hired

a.	BODILY INJURY	
	Each Occurrence	1,000,000
	Aggregate	2,000,000
b.	PROPERTY DAMAGE	
	Each Occurrence	200,000
	Aggregate	400,000

11.6.4 OWNER'S AND CONTRACTOR'S PROTECTIVE LIABILITY INSURANCE

The Contractor shall provide an Owner's and Contractor's Protective Liability Policy with the following limits: (A separate policy in the name of the Owner must be provided.)

a.	BODILY INJURY	
	Each Occurrence	1,000,000
	Aggregate	2,000,000
b.	PROPERTY DAMAGE	
	Each Occurrence	1,000,000
	Aggregate	2,000,000
c.	PROPERTY INJURY	
	Each Occurrence	1,000,000
	Aggregate	2,000,000

d. Optionally, the Owner may purchase and maintain other insurance for self-protection against claims, which may arise from operations under the Contract.

11.6.5 PROPERTY INSURANCE

a. Contractor shall furnish Builder's Risk Insurance.

END OF SECTION 00 73 00

This Page Intentionally Left Blank

DRAFT

AIA® Document A101™ – 2017

Standard Form of Agreement Between Owner and Contractor

where the basis of payment is a Stipulated Sum

AGREEMENT made as of the « » day of « » in the year « »
(In words, indicate day, month and year.)

BETWEEN the Owner:
(Name, legal status, address and other information)

« »« »
« »
« »
« »

and the Contractor:
(Name, legal status, address and other information)

« »« »
« »
« »
« »

for the following Project:
(Name, location and detailed description)

«SAMPLE»
«»
«»

The Architect:
(Name, legal status, address and other information)

« »« »
« »
« »
« »

The Owner and Contractor agree as follows.

ADDITIONS AND DELETIONS:
The author of this document has added information needed for its completion. The author may also have revised the text of the original AIA standard form. An *Additions and Deletions Report* that notes added information as well as revisions to the standard form text is available from the author and should be reviewed.

This document has important legal consequences. Consultation with an attorney is encouraged with respect to its completion or modification.

The parties should complete A101™–2017, Exhibit A, Insurance and Bonds, contemporaneously with this Agreement. AIA Document A201™–2017, General Conditions of the Contract for Construction, is adopted in this document by reference. Do not use with other general conditions unless this document is modified.

ELECTRONIC COPYING of any portion of this AIA® Document to another electronic file is prohibited and constitutes a violation of copyright laws as set forth in the footer of this document.

AIA Document A101™ – 2017. Copyright © 1915, 1918, 1925, 1937, 1951, 1958, 1961, 1963, 1967, 1974, 1977, 1987, 1991, 1997, 2007 and 2017 by The American Institute of Architects. **All rights reserved. WARNING: This AIA® Document is protected by U.S. Copyright Law and International Treaties. Unauthorized reproduction or distribution of this AIA® Document, or any portion of it, may result in severe civil and criminal penalties, and will be prosecuted to the maximum extent possible under the law.** This draft was produced by AIA software at 09:29:39 ET on 01/17/2019 under Order No.1028384526 which expires on 01/15/2020, and is not for resale.
User Notes: (728397645)

TABLE OF ARTICLES

1 THE CONTRACT DOCUMENTS

2 THE WORK OF THIS CONTRACT

3 DATE OF COMMENCEMENT AND SUBSTANTIAL COMPLETION

4 CONTRACT SUM

5 PAYMENTS

6 DISPUTE RESOLUTION

7 TERMINATION OR SUSPENSION

8 MISCELLANEOUS PROVISIONS

9 ENUMERATION OF CONTRACT DOCUMENTS

EXHIBIT A INSURANCE AND BONDS

ARTICLE 1 THE CONTRACT DOCUMENTS

The Contract Documents consist of this Agreement, Conditions of the Contract (General, Supplementary, and other Conditions), Drawings, Specifications, Addenda issued prior to execution of this Agreement, other documents listed in this Agreement, and Modifications issued after execution of this Agreement, all of which form the Contract, and are as fully a part of the Contract as if attached to this Agreement or repeated herein. The Contract represents the entire and integrated agreement between the parties hereto and supersedes prior negotiations, representations, or agreements, either written or oral. An enumeration of the Contract Documents, other than a Modification, appears in Article 9.

ARTICLE 2 THE WORK OF THIS CONTRACT

The Contractor shall fully execute the Work described in the Contract Documents, except as specifically indicated in the Contract Documents to be the responsibility of others.

ARTICLE 3 DATE OF COMMENCEMENT AND SUBSTANTIAL COMPLETION

§ 3.1 The date of commencement of the Work shall be:
(Check one of the following boxes.)

[« »] The date of this Agreement.

[« »] A date set forth in a notice to proceed issued by the Owner.

[« »] Established as follows:
(Insert a date or a means to determine the date of commencement of the Work.)

« »

If a date of commencement of the Work is not selected, then the date of commencement shall be the date of this Agreement.

§ 3.2 The Contract Time shall be measured from the date of commencement of the Work.

§ 3.3 Substantial Completion

§ 3.3.1 Subject to adjustments of the Contract Time as provided in the Contract Documents, the Contractor shall achieve Substantial Completion of the entire Work:
(Check one of the following boxes and complete the necessary information.)

AIA Document A101™ – 2017. Copyright © 1915, 1918, 1925, 1937, 1951, 1958, 1961, 1963, 1967, 1974, 1977, 1987, 1991, 1997, 2007 and 2017 by The American Institute of Architects. **All rights reserved. WARNING: This AIA® Document is protected by U.S. Copyright Law and International Treaties. Unauthorized reproduction or distribution of this AIA® Document, or any portion of it, may result in severe civil and criminal penalties, and will be prosecuted to the maximum extent possible under the law.** This draft was produced by AIA software at 09:29:39 ET on 01/17/2019 under Order No.1028384526 which expires on 01/15/2020, and is not for resale.
User Notes: (728397645)

[« »] Not later than « » (« ») calendar days from the date of commencement of the Work.

[« »] By the following date: « »

§ 3.3.2 Subject to adjustments of the Contract Time as provided in the Contract Documents, if portions of the Work are to be completed prior to Substantial Completion of the entire Work, the Contractor shall achieve Substantial Completion of such portions by the following dates:

Portion of Work	Substantial Completion Date

§ 3.3.3 If the Contractor fails to achieve Substantial Completion as provided in this Section 3.3, liquidated damages, if any, shall be assessed as set forth in Section 4.5.

ARTICLE 4 CONTRACT SUM

§ 4.1 The Owner shall pay the Contractor the Contract Sum in current funds for the Contractor's performance of the Contract. The Contract Sum shall be « » ($ « »), subject to additions and deductions as provided in the Contract Documents.

§ 4.2 Alternates

§ 4.2.1 Alternates, if any, included in the Contract Sum:

Item	Price

§ 4.2.2 Subject to the conditions noted below, the following alternates may be accepted by the Owner following execution of this Agreement. Upon acceptance, the Owner shall issue a Modification to this Agreement.
(Insert below each alternate and the conditions that must be met for the Owner to accept the alternate.)

Item	Price	Conditions for Acceptance

§ 4.3 Allowances, if any, included in the Contract Sum:
(Identify each allowance.)

Item	Price

§ 4.4 Unit prices, if any:
(Identify the item and state the unit price and quantity limitations, if any, to which the unit price will be applicable.)

Item	Units and Limitations	Price per Unit ($0.00)

§ 4.5 Liquidated damages, if any:
(Insert terms and conditions for liquidated damages, if any.)

« »

§ 4.6 Other:
(Insert provisions for bonus or other incentives, if any, that might result in a change to the Contract Sum.)

« »

AIA Document A101™ – 2017. Copyright © 1915, 1918, 1925, 1937, 1951, 1958, 1961, 1963, 1967, 1974, 1977, 1987, 1991, 1997, 2007 and 2017 by The American Institute of Architects. **All rights reserved.** **WARNING: This AIA® Document is protected by U.S. Copyright Law and International Treaties. Unauthorized reproduction or distribution of this AIA® Document, or any portion of it, may result in severe civil and criminal penalties, and will be prosecuted to the maximum extent possible under the law.** This draft was produced by AIA software at 09:29:39 ET on 01/17/2019 under Order No.1028384526 which expires on 01/15/2020, and is not for resale.
User Notes: (728397645)

ARTICLE 5 PAYMENTS

§ 5.1 Progress Payments

§ 5.1.1 Based upon Applications for Payment submitted to the Architect by the Contractor and Certificates for Payment issued by the Architect, the Owner shall make progress payments on account of the Contract Sum to the Contractor as provided below and elsewhere in the Contract Documents.

§ 5.1.2 The period covered by each Application for Payment shall be one calendar month ending on the last day of the month, or as follows:

« »

§ 5.1.3 Provided that an Application for Payment is received by the Architect not later than the « » day of a month, the Owner shall make payment of the amount certified to the Contractor not later than the « » day of the « » month. If an Application for Payment is received by the Architect after the application date fixed above, payment of the amount certified shall be made by the Owner not later than « » (« ») days after the Architect receives the Application for Payment.
(Federal, state or local laws may require payment within a certain period of time.)

§ 5.1.4 Each Application for Payment shall be based on the most recent schedule of values submitted by the Contractor in accordance with the Contract Documents. The schedule of values shall allocate the entire Contract Sum among the various portions of the Work. The schedule of values shall be prepared in such form, and supported by such data to substantiate its accuracy, as the Architect may require. This schedule of values shall be used as a basis for reviewing the Contractor's Applications for Payment.

§ 5.1.5 Applications for Payment shall show the percentage of completion of each portion of the Work as of the end of the period covered by the Application for Payment.

§ 5.1.6 In accordance with AIA Document A201™–2017, General Conditions of the Contract for Construction, and subject to other provisions of the Contract Documents, the amount of each progress payment shall be computed as follows:

§ 5.1.6.1 The amount of each progress payment shall first include:

.1 That portion of the Contract Sum properly allocable to completed Work;

.2 That portion of the Contract Sum properly allocable to materials and equipment delivered and suitably stored at the site for subsequent incorporation in the completed construction, or, if approved in advance by the Owner, suitably stored off the site at a location agreed upon in writing; and

.3 That portion of Construction Change Directives that the Architect determines, in the Architect's professional judgment, to be reasonably justified.

§ 5.1.6.2 The amount of each progress payment shall then be reduced by:

.1 The aggregate of any amounts previously paid by the Owner;

.2 The amount, if any, for Work that remains uncorrected and for which the Architect has previously withheld a Certificate for Payment as provided in Article 9 of AIA Document A201–2017;

.3 Any amount for which the Contractor does not intend to pay a Subcontractor or material supplier, unless the Work has been performed by others the Contractor intends to pay;

.4 For Work performed or defects discovered since the last payment application, any amount for which the Architect may withhold payment, or nullify a Certificate of Payment in whole or in part, as provided in Article 9 of AIA Document A201–2017; and

.5 Retainage withheld pursuant to Section 5.1.7.

§ 5.1.7 Retainage

§ 5.1.7.1 For each progress payment made prior to Substantial Completion of the Work, the Owner may withhold the following amount, as retainage, from the payment otherwise due:
(Insert a percentage or amount to be withheld as retainage from each Application for Payment. The amount of retainage may be limited by governing law.)

« »

AIA Document A101™ – 2017. Copyright © 1915, 1918, 1925, 1937, 1951, 1958, 1961, 1963, 1967, 1974, 1977, 1987, 1991, 1997, 2007 and 2017 by The American Institute of Architects. **All rights reserved. WARNING: This AIA® Document is protected by U.S. Copyright Law and International Treaties. Unauthorized reproduction or distribution of this AIA® Document, or any portion of it, may result in severe civil and criminal penalties, and will be prosecuted to the maximum extent possible under the law.** This draft was produced by AIA software at 09:29:39 ET on 01/17/2019 under Order No.1028384526 which expires on 01/15/2020, and is not for resale.
User Notes: (728397645)

§ 5.1.7.1.1 The following items are not subject to retainage:
(Insert any items not subject to the withholding of retainage, such as general conditions, insurance, etc.)

« »

§ 5.1.7.2 Reduction or limitation of retainage, if any, shall be as follows:
(If the retainage established in Section 5.1.7.1 is to be modified prior to Substantial Completion of the entire Work, including modifications for Substantial Completion of portions of the Work as provided in Section 3.3.2, insert provisions for such modifications.)

« »

§ 5.1.7.3 Except as set forth in this Section 5.1.7.3, upon Substantial Completion of the Work, the Contractor may submit an Application for Payment that includes the retainage withheld from prior Applications for Payment pursuant to this Section 5.1.7. The Application for Payment submitted at Substantial Completion shall not include retainage as follows:
(Insert any other conditions for release of retainage upon Substantial Completion.)

« »

§ 5.1.8 If final completion of the Work is materially delayed through no fault of the Contractor, the Owner shall pay the Contractor any additional amounts in accordance with Article 9 of AIA Document A201–2017.

§ 5.1.9 Except with the Owner's prior approval, the Contractor shall not make advance payments to suppliers for materials or equipment which have not been delivered and stored at the site.

§ 5.2 Final Payment

§ 5.2.1 Final payment, constituting the entire unpaid balance of the Contract Sum, shall be made by the Owner to the Contractor when

.1 the Contractor has fully performed the Contract except for the Contractor's responsibility to correct Work as provided in Article 12 of AIA Document A201–2017, and to satisfy other requirements, if any, which extend beyond final payment; and

.2 a final Certificate for Payment has been issued by the Architect.

§ 5.2.2 The Owner's final payment to the Contractor shall be made no later than 30 days after the issuance of the Architect's final Certificate for Payment, or as follows:

« »

§ 5.3 Interest

Payments due and unpaid under the Contract shall bear interest from the date payment is due at the rate stated below, or in the absence thereof, at the legal rate prevailing from time to time at the place where the Project is located.
(Insert rate of interest agreed upon, if any.)

« » % « »

ARTICLE 6 DISPUTE RESOLUTION

§ 6.1 Initial Decision Maker

The Architect will serve as the Initial Decision Maker pursuant to Article 15 of AIA Document A201–2017, unless the parties appoint below another individual, not a party to this Agreement, to serve as the Initial Decision Maker.
(If the parties mutually agree, insert the name, address and other contact information of the Initial Decision Maker, if other than the Architect.)

« »
« »
« »
« »

AIA Document A101™ – 2017. Copyright © 1915, 1918, 1925, 1937, 1951, 1958, 1961, 1963, 1967, 1974, 1977, 1987, 1991, 1997, 2007 and 2017 by The American Institute of Architects. **All rights reserved. WARNING: This AIA® Document is protected by U.S. Copyright Law and International Treaties. Unauthorized reproduction or distribution of this AIA® Document, or any portion of it, may result in severe civil and criminal penalties, and will be prosecuted to the maximum extent possible under the law.** This draft was produced by AIA software at 09:29:39 ET on 01/17/2019 under Order No.1028384526 which expires on 01/15/2020, and is not for resale.
User Notes: (728397645)

§ 6.2 Binding Dispute Resolution
For any Claim subject to, but not resolved by, mediation pursuant to Article 15 of AIA Document A201–2017, the method of binding dispute resolution shall be as follows:
(Check the appropriate box.)

[« »] Arbitration pursuant to Section 15.4 of AIA Document A201–2017

[« »] Litigation in a court of competent jurisdiction

[« »] Other *(Specify)*

« »

If the Owner and Contractor do not select a method of binding dispute resolution, or do not subsequently agree in writing to a binding dispute resolution method other than litigation, Claims will be resolved by litigation in a court of competent jurisdiction.

ARTICLE 7 TERMINATION OR SUSPENSION

§ 7.1 The Contract may be terminated by the Owner or the Contractor as provided in Article 14 of AIA Document A201–2017.

§ 7.1.1 If the Contract is terminated for the Owner's convenience in accordance with Article 14 of AIA Document A201–2017, then the Owner shall pay the Contractor a termination fee as follows:
(Insert the amount of, or method for determining, the fee, if any, payable to the Contractor following a termination for the Owner's convenience.)

« »

§ 7.2 The Work may be suspended by the Owner as provided in Article 14 of AIA Document A201–2017.

ARTICLE 8 MISCELLANEOUS PROVISIONS

§ 8.1 Where reference is made in this Agreement to a provision of AIA Document A201–2017 or another Contract Document, the reference refers to that provision as amended or supplemented by other provisions of the Contract Documents.

§ 8.2 The Owner's representative:
(Name, address, email address, and other information)

« »
« »
« »
« »
« »
« »

§ 8.3 The Contractor's representative:
(Name, address, email address, and other information)

« »
« »
« »
« »
« »
« »

§ 8.4 Neither the Owner's nor the Contractor's representative shall be changed without ten days' prior notice to the other party.

AIA Document A101™ – 2017. Copyright © 1915, 1918, 1925, 1937, 1951, 1958, 1961, 1963, 1967, 1974, 1977, 1987, 1991, 1997, 2007 and 2017 by The American Institute of Architects. **All rights reserved. WARNING: This AIA® Document is protected by U.S. Copyright Law and International Treaties. Unauthorized reproduction or distribution of this AIA® Document, or any portion of it, may result in severe civil and criminal penalties, and will be prosecuted to the maximum extent possible under the law.** This draft was produced by AIA software at 09:29:39 ET on 01/17/2019 under Order No.1028384526 which expires on 01/15/2020, and is not for resale.
User Notes: (728397645)

§ 8.5 Insurance and Bonds

§ 8.5.1 The Owner and the Contractor shall purchase and maintain insurance as set forth in AIA Document A101™–2017, Standard Form of Agreement Between Owner and Contractor where the basis of payment is a Stipulated Sum, Exhibit A, Insurance and Bonds, and elsewhere in the Contract Documents.

§ 8.5.2 The Contractor shall provide bonds as set forth in AIA Document A101™–2017 Exhibit A, and elsewhere in the Contract Documents.

§ 8.6 Notice in electronic format, pursuant to Article 1 of AIA Document A201–2017, may be given in accordance with AIA Document E203™–2013, Building Information Modeling and Digital Data Exhibit, if completed, or as otherwise set forth below:
(If other than in accordance with AIA Document E203–2013, insert requirements for delivering notice in electronic format such as name, title, and email address of the recipient and whether and how the system will be required to generate a read receipt for the transmission.)

« »

§ 8.7 Other provisions:

« »

ARTICLE 9 ENUMERATION OF CONTRACT DOCUMENTS

§ 9.1 This Agreement is comprised of the following documents:

.1 AIA Document A101™–2017, Standard Form of Agreement Between Owner and Contractor

.2 AIA Document A101™–2017, Exhibit A, Insurance and Bonds

.3 AIA Document A201™–2017, General Conditions of the Contract for Construction

.4 AIA Document E203™–2013, Building Information Modeling and Digital Data Exhibit, dated as indicated below:
(Insert the date of the E203-2013 incorporated into this Agreement.)

« »

.5 Drawings

Number	Title	Date

.6 Specifications

Section	Title	Date	Pages

.7 Addenda, if any:

Number	Date	Pages

Portions of Addenda relating to bidding or proposal requirements are not part of the Contract Documents unless the bidding or proposal requirements are also enumerated in this Article 9.

.8 Other Exhibits:
(Check all boxes that apply and include appropriate information identifying the exhibit where required.)

[« »] AIA Document E204™–2017, Sustainable Projects Exhibit, dated as indicated below:
(Insert the date of the E204-2017 incorporated into this Agreement.)

AIA Document A101™ – 2017. Copyright © 1915, 1918, 1925, 1937, 1951, 1958, 1961, 1963, 1967, 1974, 1977, 1987, 1991, 1997, 2007 and 2017 by The American Institute of Architects. **All rights reserved.** **WARNING: This AIA® Document is protected by U.S. Copyright Law and International Treaties. Unauthorized reproduction or distribution of this AIA® Document, or any portion of it, may result in severe civil and criminal penalties, and will be prosecuted to the maximum extent possible under the law.** This draft was produced by AIA software at 09:29:39 ET on 01/17/2019 under Order No.1028384526 which expires on 01/15/2020, and is not for resale.
User Notes: (728397645)

« »

[« »] The Sustainability Plan:

Title	Date	Pages

[« »] Supplementary and other Conditions of the Contract:

Document	Title	Date	Pages

.9 Other documents, if any, listed below:
(List here any additional documents that are intended to form part of the Contract Documents. AIA Document A201™–2017 provides that the advertisement or invitation to bid, Instructions to Bidders, sample forms, the Contractor's bid or proposal, portions of Addenda relating to bidding or proposal requirements, and other information furnished by the Owner in anticipation of receiving bids or proposals, are not part of the Contract Documents unless enumerated in this Agreement. Any such documents should be listed here only if intended to be part of the Contract Documents.)

« »

This Agreement entered into as of the day and year first written above.

OWNER *(Signature)*	**CONTRACTOR** *(Signature)*
« »« »	« »« »
(Printed name and title)	*(Printed name and title)*

DRAFT

AIA Document A101™ – 2017. Copyright © 1915, 1918, 1925, 1937, 1951, 1958, 1961, 1963, 1967, 1974, 1977, 1987, 1991, 1997, 2007 and 2017 by The American Institute of Architects. **All rights reserved. WARNING: This AIA® Document is protected by U.S. Copyright Law and International Treaties. Unauthorized reproduction or distribution of this AIA® Document, or any portion of it, may result in severe civil and criminal penalties, and will be prosecuted to the maximum extent possible under the law.** This draft was produced by AIA software at 09:29:39 ET on 01/17/2019 under Order No.1028384526 which expires on 01/15/2020, and is not for resale.
User Notes: (728397645)

SECTION 010100 - SUMMARY OF WORK

PART 1 - GENERAL:

1. WORK COVERED BY CONTRACT DOCUMENTS

   A. The work of this Contract is comprised of the construction of the new two story 30,962 sf Nursing Simulation Center and related site work located on the Gulf Coast State College Campus in Panama City. Florida. Work to be performed shall be in accordance with drawings and specifications prepared by DAG Architects, Inc. 455 Harrison Street, Panama City, FL 32401.

   B. The Contractor shall lay out the work with appropriately qualified personnel from the information shown on the drawings.

2. RELATED REQUIREMENTS

   A. I. Bidding Conditions
   B. II. Contractual Conditions

3. CONTRACT WORK

   The Construction base bid shall generally include, but not be limited to the following work:

   Construction of a new two-story Nursing Simulation Center as shown on the drawings.

4. CONTRACT TIME

   All work shall be substantially complete as stated in the Contract between the Owner and the General Contractor.

5. WORK BY OTHERS

   A. Work on the project which will be executed prior to the start of work on this contract, and which is excluded from this contract, as follows:

      1. None identified at this time.

6. CONTRACTOR'S USE OF PREMISES

   A. Coordinate use of premises under direction of Architect/Engineer. Locate construction staging area as shown on the site plan.

   B. Assume full responsibility for the protection and safekeeping of Products under this Contract, stored on site.

   C. Move any stored Products, under Contractor's control, which interfere with operation of the Owner or any separate Contractor.

   D. Protect all existing site vegetation and improvements not specifically noted to be demolished.

7. OWNER OCCUPANCY

   A. Contractor shall at all times conduct his operations as to ensure the safety of and least inconvenience to the students and staff of the school.

B. Owner may take beneficial occupancy of any portion of the new building so agreed and arranged between Owner, Contractor, and Architect/Engineer.

8. OWNER - FURNISHED EQUIPMENT PRODUCTS

Owner furnished equipment including installation by the Owner's vendor, or products may be planned for this contract and shall be provided to the Contractor upon 60 days written notice. Owner furnished items are as indicated on the drawings. Installation of Owner furnished equipment shall be by the Owner's installer. The Contractor and their trade contractors shall be responsible for making final plumbing, electrical and similar miscellaneous connections to all Owner furnished equipment, in compliance with the requirements of these documents and applicable codes and standards.

9. RIGHT OF ACCESS

The Contractor agrees that representatives of the Owner and Architect/Engineer will have access to the work wherever it is in preparation or progress and that the Contractor will provide facilities for such access.

10. SAFETY AND HEALTH REGULATIONS FOR CONSTRUCTION

The Contractor shall be solely responsible for all applicable obligations prescribed as employer obligations under any and all governmental regulations.

11. PROTECTION OF EXISTING GROUNDS

A. Turfs, irrigation systems, shrubbery, etc. shall be protected from any and all damage by construction vehicles or work activities. The Contractor shall be responsible for restoring same to equal or better conditions.

B. Trees are a valuable natural resource and shall be protected to at least their drip lines with wood fencing acceptable to the Architect/Engineer. Construction vehicles and activities shall in no case, except as specifically shown on the Contract Documents, violate the drip lines of existing trees.

C. The Contractor's fenced staging and construction areas may or may not include existing trees and shrubs; these shall receive protection. The entire staging and construction area shall be re-sodded as required.

D. In an effort to document existing grounds conditions, the Contractor shall provide a VHS video tape prior to his commencing any on site Construction Activities. Such video tape shall be delivered to the Architect/Engineer for review with the Owner at the project completion in order to evaluate and direct the Contractor as to restoration required.

E. Coordinate with Section 01760.

PART 2 - PRODUCTS

Not used.

PART 3 - EXECUTION

Not used.

END OF SECTION 01010.

SECTION 01040 - COORDINATION

PART 1 - GENERAL:

1. WORK INCLUDED

   A. Contractor shall supervise and direct the work competently and efficiently, devoting such attention vthereto and applying such skills as may be necessary to perform the work in accordance with the Contract Documents.

   B. Contractor shall be solely responsible for all means, methods, techniques, sequences and procedures of construction, and for providing adequate safety precautions and coordinating all portions of the work under the Contract Documents.

   C. Contractor shall be responsible to see that the finished work complies accurately with the Contract Documents.

   D. Contractor shall be responsible for all project coordination.

2. RELATED REQUIREMENTS

   A. Section 01010 - Summary of Work
   B. Section 011000 Product Approval
   B. Section 012500 Substitution Procedures
   C. Section 01700 - Contract Closeout

3. DESCRIPTION

   A. Coordinate scheduling, submittals, and work of the various sections of specifications to assure efficient and orderly sequence of installation of construction elements, with provisions for accommodating items to be installed later.

      1. Maintain reports and records at job site:

         a. Daily log of progress of work and other pertinent data. Maintain log accessible to Owner, Architect/Engineer and his representative.
         b. Assemble documentation for handling of any claims or disputes which may arise.

      2. Inspections and Testing:

         a. Inspect the work to assure that it is performed in accordance with the requirements of the Contract Documents.

         b. Arrange with the Architect/Engineer and/or owner' representative as applicable for special inspections or testing required by Section 01410 or other specification sections.
         c. Reject work which does not conform to requirements of the Contract Documents.

   B. Coordinate sequence of work to insure proposed completion dates are met.

      1. Construction Schedule:
         a. Prepare detailed schedule of Contractor's operations and for all subcontractors on the project.

         b. Monitor schedules as work progresses.

1. Identify potential variances between scheduled and probable completion date.

2. Recommend to Architect/Engineer any adjustments in schedule to meet required completion date.

3. Provide monthly summary reports of each monitoring.

c. Observe work to monitor compliance with schedule.

1. Verify that labor and equipment are adequate to meet and maintain the schedule for the work.

2. Verify that product deliveries are adequate to meet and maintain the schedule for the work.

3. Report any non-compliance to Architect/Engineer, with recommendations for remedy.

4. Verify that adequate services are provided to comply with requirements for work and climatic conditions.

5. Verify proper maintenance and operation of temporary facilities.

6. Administer traffic and parking controls for construction workers. Construction traffic shall not interfere with surrounding traffic movement.

2. Coordination of Subcontractors:

a. Coordinate work of all subcontractors and relationship between them.

b. Establish on-site lines of authority and communication. Schedule and conduct progress meetings among Owner and Architect/Engineer representatives and subcontractors.

c. Ensure that specified cleaning is done during progress of the work and at completion of contract.

4. MEETINGS

In addition to progress meeting specified in Section 01200, hold coordination meetings and pre-installation conferences with personnel and subcontractors to assure coordination of work.

5. COORDINATION OF SUBMITTALS

A. Schedule and coordinate submittals specified in Section 01340.

Administer processing of shop drawings, product data, and samples.

B. Coordinate work of various sections having interdependent responsibilities for installing, connecting to, and placing in service, such equipment.

1. Coordinate Testing Laboratory Services:

a. Notify laboratory of test schedule.

b. Verify that required personnel are present.

c. Verify that specified tests are made as scheduled.

d. Verify compliance of the test results with specified criteria. Determine need for retesting and submit recommendations to Architect/Engineer. Administer and pay for required retesting.

2. Coordinate with Sub-contractors as required:

a. Provide temporary utilities (electric, water) required by the Subcontractors in the performance of their work.

b. Provide designated location where the Subcontractors may place construction debris for removal by the Contractor.

C. Coordinate requests for changes to assure compatibility of space, of operating elements, and effect on work of other sections.

1. Recommend necessary of desirable changes to Architect/Engineer.

2. Review subcontractor's requests for changes and substitutions. Submit recommendations to Architect/Engineer.

3. Process Change Orders in accord with General Conditions and Change Order Procedures.

6. COORDINATION OF SPACE

A. Coordinate use of Project space and sequence of installation of subcontractor work which is indicated diagrammatically on Drawings. Follow routings shown for pipes, ducts, and conduits as closely as practicable, with due allowance for available physical space; make runs parallel with lines of building. Utilize space efficiently to maximize accessibility for other installations, for maintenance, and for repairs.

B. In finished areas, except as otherwise shown, conceal pipes, ducts, and wiring in the construction. Coordinate locations of fixtures and outlets with finish elements.

7. INTERPRETATION OF CONTRACT DOCUMENTS

A. Consult with Architect/Engineer to obtain interpretation or clarifications for any portions of the contract documents which are unclear or ambiguous. Transmit all requests for interpretation in writing.

B. Assist in the answering of any questions which may arise.

C. Transmit written interpretations to Sub Contractors, Suppliers and Others who's work may be affected by the clarification.

D. Interpretations shall be based on the Architect/Engineers review of the Contract Documents. In case of conflicting data, assumption shall be made that the item of greater quality, cost of quantity was bid.

8. START-UP

A. Direct the check-out of utilities, operational systems, and equipment.

B. Assist in initial start-up and testing.

C. Record dates of the start of the operations of systems and equipment.

D. Submit to Architect/Engineer written notice of the beginning of warranty period for equipment put into service.

9. COORDINATION OF CONTRACT CLOSEOUT

A. Substantial Completion:

1. Coordinate completion and cleanup of work of separate sections in preparation for Substantial Completion.

2. Upon determination of Substantial Completion of work or portion thereof, prepare for the Architect/Engineer a list of incomplete or unsatisfactory items.

B. Final Completion:

1. Upon determination that work is at final completion:

a. Submit written notice to Architect/Engineer that the work is ready for final inspection.

b. Secure and transmit to Architect/Engineer required closeout submittals.

2. Turn over to Architect/Engineer.

a. Operations and maintenance data.

b. Spare parts and maintenance materials.

c. Warranties and other data as required for these specifications.

d. Owner file copies of all submittals, changes, etc.

C. After Owner occupancy of premises, coordinate access to site by various sections for correction of defective work and work not in accordance with Contract Documents, to minimize disruption of Owner's activities.

D. Assemble and coordinate closeout submittals specified.

PART 2 - PRODUCTS:

Not used.

PART 3 - EXECUTION:

Not used.

END OF SECTION 01040.

SECTION 01 05 00 - FIELD ENGINEERING

PART 1 - GENERAL:

1. REQUIREMENTS INCLUDED

   A. Provide and pay for field engineering services required for project.
      1. Survey work required for execution of Project.
      2. Civil, structural or other professional engineering services specified, or required to execute Contractor's construction schedule.

2. RELATED REQUIREMENTS

   A. Section 01 01 00 - "Summary of Work"

3. QUALIFICATIONS OF SURVEYOR OR ENGINEER

   A. Qualified Registered Engineer or Registered Land Surveyor registered in the state of Florida, acceptable to Contractor, Owner and Architect/Engineer.

   B. Registered professional Engineer of the discipline required for the specific service on the Project, licensed in the state of Florida.

4. SURVEY REFERENCED POINTS

   A. Existing basic horizontal and vertical control points for the Project are those designated on the drawings.

   B. Locate and protect control points prior to starting site work, and preserve all permanent reference points during construction.
      1. Make no change or relocations without prior written notice to Architect/Engineer and Owner.
      2. Report to Architect/Engineer when any reference point is lost or destroyed, or requires relocation because of necessary changes in grades or locations.
      3. Require surveyor to replace Project Control Points which may be lost or destroyed.
         a. Establish replacement based on original survey control.

5. PROJECT SURVEY REQUIREMENTS

   A. Establish a minimum of two permanent benchmarks on site, referenced to data established by survey control points.

      Record the benchmark locations with horizontal and vertical data on Project Record Documents.

   B. Establish lines and levels, location and layout, by instrumentation and similar appropriate means:
      1. Site Improvements:
         a. Stakes for grading, fill and topsoil placement.
         b. Utility slopes and invert elevations.
      2. Batter boards for structures.
      3. Building foundation, column locations and floor levels.
      4. Controlling lines and levels required for mechanical and electrical trades.

   C. Verify building dimensions, layout, location on site, and finish floor elevations. Notify Architect/Engineer of any discrepancies in the dimensioning on the drawings.

   D. On a monthly basis, verify layouts by same methods.

6. RECORDS

A. Maintain a complete, accurate log of all control and survey work as it progresses.

B. On completion of foundation walls and major site improvements, prepare a certified survey showing all dimensions, locations, angles and elevation of construction. Provide three (3) copies and one reproducible of certified survey to Architect/Engineer for distribution.

7. SUBMITTALS

A. Submit name and address of Surveyor and professional engineer to Architect/Engineer.

B. On request of Architect/Engineer, submit documentation to verify accuracy of field engineering work.

C. Submit Certificate signed by registered engineer or surveyor certifying that elevations and locations of improvements are in conformance, or nonconformance with Contract Documents.

D. Submit six signed and sealed tie-in-surveys upon completion of the ground floor slab. Such survey shall indicate elevations and tie dimensions to existing structures.

PART 2 - PRODUCTS:

Not used.

PART 3 - EXECUTION:

Not used.

END OF SECTION 01 05 00

SECTION 01 11 00 – STATE OF FLORIDA PRODUCT EVALUATION AND APPROVAL REQUIREMENTS

PART 1 - GENERAL

1.1 SUMMARY

A. This Section includes the following:

1. Florida Product Evaluation and Approval.

1.2 REFERENCES

A. Florida Statute 553.842

B. Florida Administrative Code 9B-72

C. Definition: Product evaluation and approval system that applies statewide to concurrent with the Florida Building Code.

1.3 RESPONSIBILITY

A. The Contractor is responsible for providing products approved by the State of Florida with approval numbers. Do not use products that do not have a Florida approval number.

1.4 SUBMITTAL

A. Submit a copy of the approved product schedule, (attached at the end of this section), to the Architect within thirty (30) days after project has been awarded. In addition to State requirements comply with the requirements of the local jurisdiction of the project.

B. Submit the following product approval specification sheet, or local jurisdiction form to obtain building permits.

1.5 CATEGORIES

A. General: Products, methods, or systems of construction, used in the exterior envelope of a building must be approved by the Building Department. The products covered are those products, methods or systems that affect the structural integrity of the building envelope, including but not limited to the following categories.

1. Panel Walls.
2. Exterior Doors
3. Roofing Products.
4. Skylights
5. Windows
6. Shutters
7. Structural Components
8. New and Innovative Building Envelope Products.

B. If the Contractor fails to comply with this requirement, non-complying components shall be removed and replaced with components that do comply at no expense to the Owner.

PART 2 - PRODUCTS (Not Used)

PART 3 - EXECUTION (Not Used)

PRODUCT APPROVAL SPECIFICATION SHEET

Location:_____ Project: _____
Name:_____
As required by Florida Statute 553.842 and Florida Administrative Code 9B-72, please provide the information and the product approval number(s) on the building components listed below if they will be utilized on the construction project for which you are applying for a building permit. We recommend you contact your local product supplier should you not know the product approval number for any of the applicable listed products. More information about statewide product approval can be obtained at www.floridabuilding.org. Complete the following table with products to be used on this project. If not required for this project, mark as Not Applicable, (N/A), add products that may not be listed, but are required for the project, .submit to Architect and Authority Having Jurisdiction.

Category/Subcategory	Manufacturer	Product Description	Approval Number(s)
A. EXTERIOR DOORS			
1. Swinging			
2. Sliding			
3. Sectional			
4. Roll up			
5. Automatic			
6. Other			
B. WINDOWS			
1. Single hung			
2. Horizontal Slider			
3. Casement			
4. Double Hung			
5. Fixed			
6. Awning			
7. Pass -through			
8. Projected			
9. Mullion			
10. Wind Breaker			
11 Dual Action			
12. Other			
C. PANEL WALL			
1. Siding			
2. Soffits			
3. EIFS			
4. Storefronts			
5. Curtain walls			
6. Wall louver			
7. Glass block			

8. Membrane			
9. Greenhouse			
10. Other			

Category/Subcategory	Manufacturer	Product Description	Approval Number(s)
D. ROOFING PRODUCTS			
1. Asphalt Shingles			
2. Underlayments			
3. Roofing Fasteners			
4. Non-structural Metal Roof			
5. Built-Up Roofing			
6. Modified Bitumen			
7. Single Ply Roofing Sys			
8. Roofing Tiles			
9. Roofing Insulation			
10. Waterproofing			
11. Wood shingles /shakes			
12. Roofing Slate			
13. Liquid Applied Roof System			
14. Cements Adhesive Coating			
15. Roof Tile Adhesive			
16. Spray Applied Polyurethane Roof			
17. Other			
E. SHUTTERS			
1. Accordion			
2. Bahama			
3. Storm Panels			
4. Colonial			
5. Roll-up			
6. Equipment			
7. Others			
F. SKYLIGHTS			
1. Skylight			
2. Other			

Category/Subcategory	Manufacturer	Product Description	Approval Number(s)
G. STRUCTURAL COMPONENTS			
1. Wood connector/anchor			
2. Truss plates			
3. Engineered lumber			
4. Railing			
5. Coolers-freezers			
6. Concrete Admixtures			
7. Material			
8. Insulation Forms			
9. Plastics			
10. Deck-Roof			
11. Wall			
12. Sheds			
13. Other			
H. NEW EXTERIOR ENVELOPE PRODUCTS			
1.			
2.			

The products listed below did not demonstrate product approval at plan review. I understand that at the time of inspection of these products, the following information must be available to the inspector on the jobsite;

1) copy of the product approval,
2) the performance characteristics which the product was tested and certified to comply with,
3) copy of the applicable manufacturers' installation requirements.

I understand these products may have to be removed if approval cannot be demonstrated during inspection.

Contractor or Contractor's Authorized Agent Signature

Print Name

Date

Permit #

END OF SECTION 01 11 00

SECTION 012100 - ALLOWANCES

1.1 RELATED DOCUMENTS

A. Drawings and general provisions of the Contract, including General and Supplementary Conditions and other Division 01 Specification Sections, apply to this Section.

1.2 SUMMARY

A. Section includes administrative and procedural requirements governing allowances.

1. Certain items are specified in the Contract Documents by allowances. Allowances have been established in lieu of additional requirements and to defer selection of actual materials and equipment to a later date when direction will be provided to Contractor. If necessary, additional requirements will be issued by Change Order.

B. Types of allowances include the following:

1. Lump-sum allowances.
2. Unit-cost allowances.
3. Quantity allowances.
4. Contingency allowances.
5. Testing and inspecting allowances.

C. Related Requirements:

1. Section 014000 "Quality Requirements" for procedures governing the use of allowances for testing and inspecting.

1.3 SELECTION AND PURCHASE

A. At the earliest practical date after award of the Contract, advise Architect of the date when final selection and purchase of each product or system described by an allowance must be completed to avoid delaying the Work.

B. At Architect's request, obtain proposals for each allowance for use in making final selections. Include recommendations that are relevant to performing the Work.

C. Purchase products and systems selected by Architect from the designated supplier.

1.4 COORDINATION

A. Coordinate allowance items with other portions of the Work. Furnish templates as required to coordinate installation.

1.5 LUMP-SUM, UNIT-COST, AND ALLOWANCES

A. Allowance shall include cost to Contractor of specific products and materials ordered by Owner or selected by Architect under allowance and shall include taxes, freight, and delivery to Project site.

B. Unless otherwise indicated, Contractor's costs for receiving and handling at Project site, labor, installation, overhead and profit, and similar costs related to products and materials selected by Architect under allowance shall be included as part of the Contract Sum and not part of the allowance.

C. Unused Materials: Return unused materials purchased under an allowance to manufacturer or supplier for credit to Owner, after installation has been completed and accepted.

1. If requested by Architect, retain and prepare unused material for storage by Owner. Deliver unused material to Owner's storage space as directed.

1.6 CONTINGENCY ALLOWANCES

A. Use the contingency allowance only as directed by Architect for Owner's purposes and only by Change Orders that indicate amounts to be charged to the allowance.

B. Contractor's overhead, profit, and related costs for products and equipment ordered by Owner under the contingency allowance are included in the allowance and are not part of the Contract Sum. These costs include delivery, installation, taxes, insurance, equipment rental, and similar costs.

C. Change Orders authorizing use of funds from the contingency allowance will include Contractor's related costs and reasonable overhead and profit margins.

D. At Project closeout, credit unused amounts remaining in the contingency allowance to Owner by Change Order.

1.7 TESTING AND INSPECTING ALLOWANCES

1. Testing and inspecting allowances include the cost of engaging testing agencies, actual tests and inspections, and reporting results. Allowance to be included in bid pricing for Testing and Inspections.

2. The allowance does not include incidental labor required to assist the testing agency or costs for retesting if previous tests and inspections result in failure. The cost for incidental labor to assist the testing agency shall be included in the Contract Sum.

3. Costs of services not required by the Contract Documents are not included in the allowance.

4. At Project closeout, credit unused amounts remaining in the testing and inspecting allowance back to Owner by Change Order.

1.8 ALLOWANCES TO BE INCLUDED IN BASE BID:

A. **BUILDING DESIGN AND OWNER SCOPE CONTINGENCY –** All bidders are instructed to include a **$350,000.00** allowance in their base bids for the owner's use related to Building scope refinements that may become necessary during the construction process.

B. **SIGNAGE PACKAGE –** All bidders are instructed to include a **$28,000.00** allowance to include exterior letters, dedication plaque, hall directories, room id signage as well as installation.

1.9 ADJUSTMENT OF ALLOWANCES

A. Allowance Adjustment: To adjust allowance amounts, prepare a Change Order proposal based on the difference between purchase amount and the allowance, multiplied by final measurement of work-in-place where applicable. If applicable, include reasonable allowances for cutting losses, tolerances, mixing wastes, normal product imperfections, and similar margins.

1. Include installation costs in purchase amount only where indicated as part of the allowance.
2. If requested, prepare explanation and documentation to substantiate distribution of overhead costs and other margins claimed.
3. Submit substantiation of a change in scope of work, if any, claimed in Change Orders related to unit-cost allowances.
4. GC Overhead and profit shall be covered in the general conditions. Allowances are solely for the direct payment to vendor. Any unused allowances are retained by Owner.
5. Owner reserves the right to establish the quantity of work-in-place by independent quantity survey, measure, or count.

B. Submit claims for increased costs because of a change in scope or nature of the allowance described in the Contract Documents, whether for the purchase order amount or Contractor's handling, labor, installation, overhead, and profit.

1. Do not include Contractor's or subcontractor's indirect expense in the Change Order cost amount unless it is clearly shown that the nature or extent of work has changed from what could have been foreseen from information in the Contract Documents.
2. No change to Contractor's indirect expense is permitted for selection of higher- or lower-priced materials or systems of the same scope and nature as originally indicated.

PART 2 - PRODUCTS (Not

Used)

PART 3 - EXECUTION

3.1 EXAMINATION

A. Examine products covered by an allowance promptly on delivery for damage or defects. Return damaged or defective products to manufacturer for replacement.

3.2 PREPARATION

A. Coordinate materials and their installation for each allowance with related materials and installations to ensure that each allowance item is completely integrated and interfaced with related work.

END OF SECTION 01 21 00

SECTION 01 21 01 - PROCEDURES AND PERFORMANCE

PART 1 - PROCEDURES

1. Observation: The Architect and his Consulting Engineers may review all the work including Architectural, Civil, Structural, Plumbing, Electrical and Mechanical on this project.
2. Tests: Required tests on the project will be Soil Density Tests, concrete cylinder and slump tests and other testing that may be specified on other sections of these Contract Documents or on the drawings, and others as may be deemed appropriated by the Architect/Engineer and Owner. Refer to structural drawings and specifications for specific requirements.

PART 2 - PERFORMANCE

1. Measurements and Dimensions: Before ordering materials or doing work which is dependent for proper size, or installation upon coordination with building conditions, the Contractor shall verify all dimensions by taking measurements at the building and shall be responsible for the correctness of same. No consideration will be given any claim based on the difference between the actual dimensions and those indicated on the drawings. Any discrepancies between the drawings and/or the specifications and the existing conditions shall be referred to the Architect for adjustment before any work affected thereby is begun.

PART 3 - EXECUTION

Not used.

END OF SECTION 01 21 01

THIS PAGE LEFT INTENTIONALLY BLANK

SECTION 012300 - ALTERNATES

PART 1 - GENERAL

1.01 AN ALTERNATE is a separate piece of work proposed by Bidders and stated on the Bid Form for certain items that may be added to or deducted from Base Bid amount, which the Owner may or may not decide to accept, a corresponding change in either the amount of construction to be completed, or in the products, materials, equipment, systems or installation methods described in Contract Documents. The alternate much be approved by the Architect in writing, prior to the Bid.

The Owner shall have the right to accept Alternates in any order and to determine the low Bidder based on the sum of the Base Bid and Alternates accepted. The owner reserves the right to reject any bid based solely on any alternate included but not approved in advance.

1.02 COORDINATION: Contractor shall coordinate related Work and modify or adjust adjacent Work as necessary to ensure that Work affected by each accepted alternate is complete and fully integrated into the Project.

1.03 NOTIFICATION: Immediately following Contract award, the Architect shall prepare and distribute to each party involved, notification of the status of each alternate. Indicate whether alternates have been accepted, rejected or deferred for consideration later. Include a complete description of negotiated modifications to alternates and their impact on Bid pricing.

1.04 SCHEDULE: A "Schedule of Alternates" is included below. Specification Sections referenced in the Schedule contain requirements for materials and methods necessary to achieve the Work described under each alternate.

Include as part of each alternate, miscellaneous devices, accessory objects and similar items incidental to or required for a complete installation whether mentioned as part of the alternate. If alternate is accepted, it is understood that ALL accessories required for complete performance are included in the award of the contract to the Bidder. No Adds will be accepted later for voluntary Bid Alternates.

1.05 SCHEDULE OF ALTERNATES

Deductive Alternate No.1 (Provide HM door frames and sidelights in lieu of storefront)

Provide HM frames with Solid Core Wood Doors in lieu of Aluminum storefront in the office areas and entrances to classrooms. Below is a list of door numbers to which this will apply:
Door Numbers -

Deductive Alternate No.2 (Delete outdoor plaza)

Delete (shaded area) brick pavers and concrete patio, concrete seat wall, landscaping and irrigation as shown on architectural and landscape and irrigation documents.

Deductive Alternate No.3 (Modifications to South Elevation)

Delete curtainwall CW-05 at stairwell at South end of building. Provide ICF with impact resistant finish and brick veneer in lieu of curtainwall as shown on partial South Elevation. Provide HM door and frame in lieu of aluminum storefront door and frame.

Deductive Alternate No.4 (Reduce Building Footprint)

Reduce the building footprint by shifting the North end of the building to the South by 13 feet. (This would reduce the overall square footage by 1075 sf per floor for a total of 2150 sf . Refer to the partial first and second floor plans for revised layout. Refer to the partial East and West exterior elevations for exterior modifications. The North Elevation would remain the same as shown in the base bid documents.
In addition to the above, refer to Structural, MEP and FP for modifications based on building footprint reduction.

COORDINATE THIS LIST WITH ALTERNATES LISTED IN SECTION 000300-BID FORM

END OF SECTION 012300

SECTION 012500 - SUBSTITUTION PROCEDURES

PART 1 - GENERAL

1.1 SUMMARY

A. Section includes administrative and procedural requirements for substitutions.

B. Related Requirements:

1. Section 01 60 00 "Product Requirements" for requirements for submitting comparable product submittals for products by listed manufacturers.

1.2 DEFINITIONS

A. Substitutions: Changes in products, materials, equipment, and methods of construction from those required by the Contract Documents and proposed by Contractor.

1.3 ACTION SUBMITTALS

A. Substitution Requests: Submit one electronic copy of each request for consideration. Identify product or fabrication or installation method to be replaced. Include Specification Section number and title and Drawing numbers and titles. The following documents shall be required for the Architects review at minimum. Failure to include any item listed shall be grounds for rejection.

1. Substitution Request Form: Use CSI Form 13.1A.
2. Documentation: Show compliance with requirements for substitutions and the following, as applicable:

a. Statement indicating why specified product or fabrication or installation cannot be provided, if applicable.
b. Coordination information, including a list of changes or revisions needed to other parts of the Work and to construction performed by Owner and separate contractors, that will be necessary to accommodate proposed substitution.
c. Detailed comparison of significant qualities of proposed substitution with those of the Work specified. Include annotated copy of applicable Specification Section. Significant qualities may include attributes such as performance, weight, size, durability, visual effect, sustainable design characteristics, warranties, and specific features and requirements indicated. Indicate deviations, if any, from the Work specified.
d. Product Data, including drawings and descriptions of products and fabrication and installation procedures.
e. Samples, where applicable or requested.
f. Certificates and qualification data, where applicable or requested.
g. List of similar installations for completed projects with project names and addresses and names and addresses of architects and owners.
h. Material test reports from a qualified testing agency indicating and interpreting test results for compliance with requirements indicated.

i. Research reports evidencing compliance with building code in effect for Project, from ICC-ES
j. Detailed comparison of Contractor's construction schedule using proposed substitution with products specified for the Work, including effect on the overall Contract Time. If specified product or method of construction cannot be provided within the Contract Time, include letter from manufacturer, on manufacturer's letterhead, stating date of receipt of purchase order, lack of availability, or delays in delivery.
k. Cost information, including a proposal of change, if any, in the Contract Sum.
l. Contractor's certification that proposed substitution complies with requirements in the Contract Documents except as indicated in substitution request, is compatible with related materials, and is appropriate for applications indicated.
m. Contractor's waiver of rights to additional payment or time that may subsequently become necessary because of failure of proposed substitution to produce indicated results.

3. Architect's Action: If necessary, Architect will request additional information or documentation for evaluation within seven days of receipt of a request for substitution. Architect will notify Contractor of acceptance or rejection of proposed substitution within 15 days of receipt of request, or seven days of receipt of additional information or documentation, whichever is later.

a. Forms of Acceptance: Change Order, Construction Change Directive, or Architect's Supplemental Instructions for minor changes in the Work.
b. Use product specified if Architect does not issue a decision on use of a proposed substitution within time allocated.

1.4 QUALITY ASSURANCE

A. Compatibility of Substitutions: Investigate and document compatibility of proposed substitution with related products and materials. Engage a qualified testing agency to perform compatibility tests recommended by manufacturers.

PART 2 - PRODUCTS

2.1 SUBSTITUTIONS

A. Substitutions for Cause: Submit requests for substitution immediately on discovery of need for change, but not later than 15 days prior to time required for preparation and review of related submittals.

1. Conditions: Architect will consider Contractor's request for substitution when the following conditions are satisfied:

a. Requested substitution is consistent with the Contract Documents and will produce indicated results.
b. Requested substitution will not adversely affect Contractor's construction schedule.
c. Requested substitution has received necessary approvals of authorities having jurisdiction, including Florida Product Approval number if applicable.
d. Requested substitution is compatible with other portions of the Work.
e. Requested substitution has been coordinated with other portions of the Work.
f. Requested substitution provides specified warranty.
g. If requested substitution involves more than one contractor, the contractor shall certify in writing that the requested substitution has been coordinated with other portions of the

Work, is uniform and consistent, is compatible with other products, and is acceptable to all contractors involved.

B. Substitutions for Convenience: Not allowed

PART 3 - EXECUTION (Not Used)

CSI FORM 13.1A follows in section 012500 Appendix 'A'.

END OF SECTION 012500

THIS PAGE INTENTIONALLY BLANK

SUBSTITUTION REQUEST
(After the Bidding/Negotiating Phase)

Project: _____ Substitution Request Number: _____

_____ From: _____

To: _____ Date: _____

_____ A/E Project Number: _____

Re: _____ Contract For: _____

Specification Title: _____ Description: _____

Section: _____ Page: _____ Article/Paragraph: _____

Proposed Substitution: _____

Manufacturer: _____ Address: _____ Phone: _____

Trade Name: _____ Model No.: _____

Installer: _____ Address: _____ Phone: _____

History: ☐ New product ☐ 1-4 years old ☐ 5-10 years old ☐ More than 10 years old

Differences between proposed substitution and specified product: _____

_____

_____

☐ Point-by-point comparative data attached — REQUIRED BY A/E

Reason for not providing specified item: _____

_____

Similar Installation:

Project: _____ Architect: _____

Address: _____ Owner: _____

_____ Date Installed: _____

Proposed substitution affects other parts of Work: ☐ No ☐ Yes; explain _____

_____

Savings to Owner for accepting substitution: _____ ($ _____).

Proposed substitution changes Contract Time: ☐ No ☐ Yes [Add] [Deduct] _____ days.

Supporting Data Attached: ☐Drawings ☐Product Data ☐ Samples ☐ Tests ☐ Reports ☐ _____

© Copyright 2013, CSI,
110 S. Union St., Suite 100, Alexandria, VA 22314

Form Version: September 2013
CSI Form 13.1A

SUBSTITUTION REQUEST

(After the Bidding/Negotiating Phase — Continued)

The Undersigned certifies:

- Proposed substitution has been fully investigated and determined to be equal or superior in all respects to specified product.
- Same warranty will be furnished for proposed substitution as for specified product.
- Same maintenance service and source of replacement parts, as applicable, is available.
- Proposed substitution will have no adverse effect on other trades and will not affect or delay progress schedule.
- Cost data as stated above is complete. Claims for additional costs related to accepted substitution which may subsequently become apparent are to be waived.
- Proposed substitution does not affect dimensions and functional clearances.
- Payment will be made for changes to building design, including A/E design, detailing, and construction costs caused by the substitution.
- Coordination, installation, and changes in the Work as necessary for accepted substitution will be complete in all respects.

Submitted by: _____

Signed by: _____

Firm: _____

Address: _____

_____

Telephone: _____

Attachments: ☐

A/E's REVIEW AND RECOMMENDATION

☐ Approve Substitution - Make submittals in accordance with Specification Section 01 33 00 Submittal Procedures.
☐ Approve Substitution as noted - Make submittals in accordance with Specification Section 01 33 00 Submittal Procedures.
☐ Reject Substitution - Use specified materials.
☐ Substitution Request received too late - Use specified materials.

Signed by: _____ Date: _____

OWNER'S REVIEW AND ACTION

☐ Substitution approved - Make submittals in accordance with Specification Section 01 33 00 Submittal Procedures. Prepare Change Order.
☐ Substitution approved as noted - Make submittals in accordance with Specification Section 01 33 00 Submittal Procedures. Prepare Change Order.
☐ Substitution rejected - Use specified materials.

Signed by: _____ Date: _____

Additional Comments: ☐Contractor ☐Subcontractor ☐Supplier ☐Manufacturer ☐A/E

© Copyright 2013, CSI,
110 S. Union St., Suite 100, Alexandria, VA 22314

Form Version: September 2013
CSI Form 13.1A

SECTION 012900 - PAYMENT PROCEDURES

1.1 RELATED DOCUMENTS

A. Drawings and general provisions of the Contract, including General and Supplementary Conditions and other Division 01 Specification Sections, apply to this Section.

1.2 SUMMARY

A. Section includes administrative and procedural requirements necessary to prepare and process Applications for Payment.

B. Related Requirements:
1. Section 012100 "Allowances" for procedural requirements governing the handling and processing of allowances.
2. Section 012200 "Unit Prices" for administrative requirements governing the use of unit prices.
3. Section 012600 "Contract Modification Procedures" for administrative procedures for handling changes to the Contract.
4. Section 013200 "Construction Progress Documentation" for administrative requirements governing the preparation and submittal of the Contractor's construction schedule.

1.3 DEFINITIONS

A. Schedule of Values: A statement furnished by Contractor allocating portions of the Contract Sum to various portions of the Work and used as the basis for reviewing Contractor's Applications for Payment.

1.4 SCHEDULE OF VALUES

A. Coordination: Coordinate preparation of the schedule of values with preparation of Contractor's construction schedule.

1. Coordinate line items in the schedule of values with items required to be indicated as separate activities in Contractor's construction schedule.
2. Submit the schedule of values to Architect at earliest possible date, but no later than **seven** days before the date scheduled for submittal of initial Applications for Payment.
3. Subschedules for Phased Work: Where the Work is separated into phases requiring separately phased payments, provide subschedules showing values coordinated with each phase of payment.
4. Subschedules for Separate Elements of Work: Where the Contractor's construction schedule defines separate elements of the Work, provide subschedules showing values coordinated with each element.

B. Format and Content: Use Project Manual table of contents as a guide to establish line items for the schedule of values. Provide at least one line item for each Specification Section.

1. Identification: Include the following Project identification on the schedule of values:

a. Project name and location.
b. Owner's name.
c. Owner's Project number.
d. Name of Architect.
e. Architect's Project number.
f. Contractor's name and address.
g. Date of submittal.

2. Arrange schedule of values consistent with format of **AIA Document G703**.
3. Arrange the schedule of values in tabular form, with separate columns to indicate the following for each item listed:

a. Related Specification Section or division.
b. Description of the Work.
c. Name of subcontractor.
d. Name of manufacturer or fabricator.
e. Name of supplier.
f. Change Orders (numbers) that affect value.
g. Dollar value of the following, as a percentage of the Contract Sum to nearest one-hundredth percent, adjusted to total 100 percent. Round dollar amounts to whole dollars, with total equal to Contract Sum.

1) Labor.
2) Materials.
3) Equipment.

4. Provide a breakdown of the Contract Sum in enough detail to facilitate continued evaluation of Applications for Payment and progress reports. Provide multiple line items for principal subcontract amounts in excess of **five** percent of the Contract Sum.
5. Provide a separate line item in the schedule of values for each part of the Work where Applications for Payment may include materials or equipment purchased or fabricated and stored, but not yet installed.

a. Differentiate between items stored on-site and items stored off-site.

6. Allowances: Provide a separate line item in the schedule of values for each allowance. Show line-item value of unit-cost allowances, as a product of the unit cost, multiplied by measured quantity. Use information indicated in the Contract Documents to determine quantities.
7. Purchase Contracts: Provide a separate line item in the schedule of values for each Purchase contract. Show line-item value of Purchase contract. Indicate Owner payments or deposits, if any, and balance to be paid by Contractor.
8. Temporary Facilities: Show cost of temporary facilities and other major cost items that are not direct cost of actual work-in-place as separate line items.
9. Closeout Costs. Include separate line items under Contractor and principal subcontracts for Project closeout requirements in an amount totaling [**five**] <**Insert number**> percent of the Contract Sum and subcontract amount.
10. Schedule of Values Revisions: Revise the schedule of values when Change Orders or Construction Change Directives result in a change in the Contract Sum. Include at least one separate line item for each Change Order and Construction Change Directive.

1.5 APPLICATIONS FOR PAYMENT

A. Each Application for Payment following the initial Application for Payment shall be consistent with previous applications and payments, as certified by Architect and paid for by Owner.

B. Payment Application Times: The date for each progress payment is indicated in the Owner/Contractor Agreement. The period of construction work covered by each Application for Payment is the period indicated in the Agreement.

1. Submit draft copy of Application for Payment **seven** days prior to due date for review by Architect.

C. Application for Payment Forms: Use **AIA Document G702 and AIA Document G703** as form for Applications for Payment.

D. Application Preparation: Complete every entry on form. Notarize and execute by a person authorized to sign legal documents on behalf of Contractor. **Architect**will return incomplete applications without action.

1. Entries shall match data on the schedule of values and Contractor's construction schedule. Use updated schedules if revisions were made.
2. Include amounts for work completed following previous Application for Payment, whether or not payment has been received. Include only amounts for work completed at time of Application for Payment.
3. Include amounts of Change Orders and Construction Change Directives issued before last day of construction period covered by application.
4. Indicate separate amounts for work being carried out under Owner-requested project acceleration.

E. Stored Materials: Include in Application for Payment amounts applied for materials or equipment purchased or fabricated and stored, but not yet installed. Differentiate between items stored on-site and items stored off-site.

1. Provide certificate of insurance, evidence of transfer of title to Owner, and consent of surety to payment for stored materials.
2. Provide supporting documentation that verifies amount requested, such as paid invoices. Match amount requested with amounts indicated on documentation; do not include overhead and profit on stored materials.
3. Provide summary documentation for stored materials indicating the following:

    a. Value of materials previously stored and remaining stored as of date of previous Applications for Payment.
    b. Value of previously stored materials put in place after date of previous Application for Payment and on or before date of current Application for Payment.
    c. Value of materials stored since date of previous Application for Payment and remaining stored as of date of current Application for Payment.

F. Transmittal: Submit **three** signed and notarized original copies of each Application for Payment to **Architect** by a method ensuring receipt **within 24 hours**. One copy shall include waivers of lien and similar attachments if required.

1. Transmit each copy with a transmittal form listing attachments and recording appropriate information about application.

G. Waivers of Mechanic's Lien: With each Application for Payment, submit waivers of mechanic's lien from **entities lawfully entitled to file a mechanic's lien arising out of the Contract and related to the Work covered by the payment**, **sub-subcontractors, and suppliers for construction period covered by the previous application**].

1. Submit partial waivers on each item for amount requested in previous application, after deduction for retainage, on each item.

2. When an application shows completion of an item, submit conditional final or full waivers.
3. Owner reserves the right to designate which entities involved in the Work must submit waivers.
4. Submit final Application for Payment with or preceded by conditional final waivers from every entity involved with performance of the Work covered by the application who is lawfully entitled to a lien.
5. Waiver Forms: Submit executed waivers of lien on forms acceptable to Owner.

H. Initial Application for Payment: Administrative actions and submittals that must precede or coincide with submittal of first Application for Payment include the following:

1. List of subcontractors.
2. Schedule of values.
3. Contractor's construction schedule (preliminary if not final).

I. Application for Payment at Substantial Completion: After Architect issues the Certificate of Substantial Completion, submit an Application for Payment showing 100 percent completion for portion of the Work claimed as substantially complete.

1. Include documentation supporting claim that the Work is substantially complete and a statement showing an accounting of changes to the Contract Sum.

   a. Complete administrative actions, submittals, and Work preceding this application, as described in Section 017700 "Closeout Procedures."

2. This application shall reflect Certificate(s) of Substantial Completion issued previously for Owner occupancy of designated portions of the Work.

J. Final Payment Application: After completing Project closeout requirements, submit final Application for Payment with releases and supporting documentation not previously submitted and accepted, including, but not limited, to the following:

1. Evidence of completion of Project closeout requirements.
2. Certification of completion of final punch list items.
3. Insurance certificates for products and completed operations where required and proof that taxes, fees, and similar obligations were paid.
4. Updated final statement, accounting for final changes to the Contract Sum.
5. AIA Document G706.
6. AIA Document G706A.
7. AIA Document G707.
8. Evidence that claims have been settled.
9. Final meter readings for utilities, a measured record of stored fuel, and similar data as of date of Substantial Completion or when Owner took possession of and assumed responsibility for corresponding elements of the Work.
10. Final liquidated damages settlement statement.
11. Proof that taxes, fees, and similar obligations are paid.
12. Waivers and releases.

PART 2 - PRODUCTS (Not Used)

PART 3 - EXECUTION (Not Used)

END OF SECTION 012900

SECTION 013100 - PROJECT MANAGEMENT AND COORDINATION

PART 1 - GENERAL

1.1 SUMMARY

A. Section includes administrative provisions for coordinating construction operations on Project including, but not limited to, the following:

1. Coordination drawings.
2. Requests for Information (RFIs).
3. Project meetings.

B. Related Requirements:
1. Section 017300 "Execution" for procedures for coordinating general installation and field-engineering services, including establishment of benchmarks and control points.

1.2 DEFINITIONS

A. RFI: Request from Owner, Architect, or Contractor seeking information required by or clarifications of the Contract Documents.

1.3 INFORMATIONAL SUBMITTALS

A. Subcontract List: Prepare a written summary identifying individuals or firms proposed for each portion of the Work, including those who are to furnish products or equipment fabricated to a special design. Use CSI Form 1.5A. Include the following information in tabular form:

1. Name, address, and telephone number of entity performing subcontract or supplying products.
2. Number and title of related Specification Section(s) covered by subcontract.
3. Drawing number and detail references, as appropriate, covered by subcontract.

1.4 GENERAL COORDINATION PROCEDURES

A. Coordination: The General Contractor shall coordinate construction operations included in different Sections of the Specifications to ensure efficient and orderly installation of each part of the Work. Coordinate construction operations, included in different Sections, that depend on each other for proper installation, connection, and operation.

1. Schedule construction operations in sequence required to obtain the best results where installation of one part of the Work depends on installation of other components, before or after its own installation.
2. Coordinate installation of different components to ensure maximum performance and accessibility for required maintenance, service, and repair.
3. Make adequate provisions to accommodate items scheduled for later installation.

B. Prepare memoranda for distribution to each party involved, outlining special procedures required for coordination. Include such items as required notices, reports, and list of attendees at meetings.

1. Prepare similar memoranda for Owner and separate contractors if coordination of their Work is required.

C. Administrative Procedures: Coordinate scheduling and timing of required administrative procedures with other construction activities and activities of other contractors to avoid conflicts and to ensure orderly progress of the Work. Such administrative activities include, but are not limited to, the following:

1. Preparation of Contractor's construction schedule.
2. Preparation of the schedule of values.
3. Installation and removal of temporary facilities and controls.
4. Delivery and processing of submittals.
5. Progress meetings.
6. Preinstallation conferences.
7. Project closeout activities.
8. Startup and adjustment of systems.

1.5 COORDINATION DRAWINGS

A. Coordination Drawings, The General Contractor shall prepare coordination drawings according to requirements in individual Sections, where installation is not completely shown on Shop Drawings, where limited space availability necessitates coordination, or if coordination is required to facilitate integration of products and materials fabricated or installed by more than one entity.

1. Content: Project-specific information, drawn accurately to a scale large enough to indicate and resolve conflicts. Do not base coordination drawings on standard printed data. Include the following information, as applicable:

   a. Indicate functional and spatial relationships of components of architectural, structural, civil, mechanical, and electrical systems.
   b. Indicate dimensions shown on the Drawings. Specifically note dimensions that appear to be in conflict with submitted equipment and minimum clearance requirements. Provide alternate sketches to Architect indicating proposed resolution of such conflicts. Minor dimension changes and difficult installations will not be considered changes to the Contract.

B. Coordination Drawing Organization: Organize coordination drawings as follows:

1. Floor Plans and Reflected Ceiling Plans: Show architectural and structural elements, and mechanical, plumbing, fire-protection, fire-alarm, and electrical Work. Show locations of visible ceiling-mounted devices relative to acoustical ceiling grid.
2. Plenum Space: Indicate sub-framing for support of ceiling and wall systems, mechanical and electrical equipment, and related Work. Locate components within ceiling plenum to accommodate layout of light fixtures indicated on Drawings.
3. Mechanical Rooms: Provide coordination drawings for mechanical rooms showing plans and elevations of mechanical, plumbing, fire-protection, fire-alarm, and electrical equipment.
4. Structural Penetrations: Indicate penetrations and openings required for all disciplines.
5. Slab Edge and Embedded Items: Indicate slab edge locations and sizes and locations of embedded items for metal fabrications, sleeves, anchor bolts, bearing plates, angles, door floor closers, slab depressions for floor finishes, curbs and housekeeping pads, and similar items.
6. Review: Architect will review coordination drawings to confirm that the Work is being coordinated, but not for the details of the coordination, which are Contractor's responsibility.

1.6 REQUESTS FOR INFORMATION (RFIs)

A. General: Immediately on discovery of the need for additional information or interpretation of the Contract Documents, Contractor shall prepare and submit an RFI in the form specified.

1. Architect will return RFIs submitted to Architect by other entities controlled by Contractor with no response.
2. Coordinate and submit RFIs in a prompt manner so as to avoid delays in Contractor's work or work of subcontractors.
3. Maintain an RFI log for review at every project meeting. Include date submitted and returned and brief description of subject matter.

B. Content of the RFI: Include a detailed, legible description of item needing information or interpretation and the following:

1. Project name.
2. Project number.
3. Date.
4. Name of Sub-contractor.
5. Name of Architect and General Contractor.
6. RFI number, numbered sequentially.
7. RFI subject.
8. Specification Section number and title and related paragraphs, as appropriate.
9. Drawing number and detail references, as appropriate.
10. Field dimensions and conditions, as appropriate.
11. Contractor's suggested resolution. If Contractor's solution(s) impacts the Contract Time or the Contract Sum, Contractor shall state impact in the RFI.
12. Contractor's signature.
13. Attachments: Include sketches, descriptions, measurements, photos, Product Data, Shop Drawings, coordination drawings, and other information necessary to fully describe items needing interpretation.
14. Offer potential solutions for consideration.

C. RFI Forms: AIA Document G716 or Software-generated form with substantially the same content as indicated above, acceptable to Architect.

D. Architect's Action: Architect will review each RFI, determine action required, and respond. Allow seven working days for Architect's response for each RFI. RFIs received by Architect after 1:00 p.m. will be considered as received the following working day

1. The following RFIs will be returned without action:

a. Requests for approval of submittals.
b. Requests for approval of substitutions.
c. Requests for coordination information already indicated in the Contract Documents.
d. Requests for adjustments in the Contract Time or the Contract Sum.
e. Requests for interpretation of Architect's actions on submittals.
f. Incomplete RFIs or inaccurately prepared RFIs.

2. Architect's action may include a request for additional information, in which case Architect's time for response will date from time of receipt of additional information.
3. Architect's action on RFIs that may result in a change to the Contract Time or the Contract Sum may be eligible for Contractor to submit Change Proposal according to Section 012600 "Contract Modification Procedures."

a. If Contractor believes the RFI response warrants change in the Contract Time or the Contract Sum, notify Architect in writing within 10 days of receipt of the RFI response.

E. RFI Log: Prepare, maintain, and submit a tabular log of RFIs organized by the RFI number. Submit log weekly. Include the following:] [Software log with not less than the following:

1. Project name.
2. Name and address of Contractor.
3. Name and address of Architect and General Contractor.
4. RFI number including RFIs that were dropped and not submitted.
5. RFI description.
6. Date the RFI was submitted.
7. Date Architect's response was received.

F. On receipt of Architect's action, update the RFI log and immediately distribute the RFI response to affected parties. Review response and notify Architect within seven days if Contractor disagrees with response.

1. Identification of related Minor Change in the Work, Construction Change Directive, and Proposal Request, as appropriate.

1.7 PROJECT MEETINGS

A. General: Schedule and conduct meetings and conferences at Project site unless otherwise indicated. Meetings shall be scheduled at two week intervals.

1. Attendees: Inform participants and others involved, and individuals whose presence is required, of date and time of each meeting. Notify Owner and Architect of scheduled meeting dates and times.
2. Agenda: The contractor shall prepare the meeting agenda. Distribute the agenda to all invited attendees at least two days prior to meeting.
3. Minutes:The contractor shall be responsible for conducting meeting and recording significant discussions and agreements achieved. Distribute the meeting minutes to everyone concerned, including Owner and Architect, within three days of the meeting.

B. Pre-construction Conference: Owner and Architect will schedule and conduct a pre-construction conference before starting construction, at a time convenient to Owner and Architect, but no later than 15 days after execution of the Agreement.

1. Attendees: Authorized representatives of Owner, Commissioning Authority, Architect, and their consultants; Contractor and its superintendent; major subcontractors; suppliers; and other concerned parties shall attend the conference. Participants at the conference shall be familiar with Project and authorized to conclude matters relating to the Work.
2. Agenda: Discuss items of significance that could affect progress, including the following:

a. Tentative construction schedule.
b. Phasing.
c. Critical work sequencing and long-lead items.
d. Designation of key personnel and their duties.
e. Procedures for processing field decisions and Change Orders.
f. Procedures for RFIs.
g. Procedures for testing and inspecting.
h. Procedures for processing Applications for Payment.
i. Distribution of the Contract Documents.
j. Submittal procedures.

k. LEED requirements Sustainable design requirements.
l. Preparation of record documents.
m. Use of the premises and existing building.
n. Work restrictions.
o. Working hours.
p. Owner's occupancy requirements.
q. Responsibility for temporary facilities and controls.
r. Procedures for moisture and mold control.
s. Procedures for disruptions and shutdowns.
t. Construction waste management and recycling.
u. Parking availability.
v. Office, work, and storage areas.
w. Equipment deliveries and priorities.
x. First aid.
y. Security.
z. Progress cleaning.

3. Pre-Construction Meeting Minutes: The Architect and Owner will conduct the pre-construction meeting and will record and distribute minutes.

C. Pre-installation Conferences: The contractor shall conduct a pre-installation conference at Project site before each construction activity that requires coordination with other construction.

1. Attendees: Installer and representatives of manufacturers and fabricators involved in or affected by the installation and its coordination or integration with other materials and installations that have preceded or will follow, shall attend the meeting. Advise Architect, and Owner of scheduled meeting dates.
2. Agenda: Review progress of other construction activities and preparations for the particular activity under consideration, including requirements for the following:

a. Contract Documents.
b. Options.
c. Related RFIs.
d. Related Change Orders.
e. Purchases.
f. Deliveries.
g. Submittals.
h. LEED requirements
i. Review of mockups.
j. Possible conflicts.
k. Compatibility problems.
l. Time schedules.
m. Weather limitations.
n. Manufacturer's written instructions.
o. Warranty requirements.
p. Compatibility of materials.
q. Acceptability of substrates.
r. Temporary facilities and controls.
s. Space and access limitations.
t. Regulations of authorities having jurisdiction.
u. Testing and inspecting requirements.
v. Installation procedures.
w. Coordination with other work.
x. Required performance results.
y. Protection of adjacent work.
z. Protection of construction and personnel.

3. The contractor shall record significant conference discussions, agreements, and disagreements, including required corrective measures and actions.
4. Reporting: Distribute minutes of the meeting to each party present and to other parties requiring information.
5. Do not proceed with installation if the conference cannot be successfully concluded. Initiate whatever actions are necessary to resolve impediments to performance of the Work and reconvene the conference at earliest feasible date.

D. Progress Meetings: Conduct progress meetings at monthly intervals.

1. Attendees: In addition to representatives of Owner, General Contractor and Architect, each contractor, subcontractor, supplier, and other entity concerned with current progress or involved in planning, coordination, or performance of future activities shall be represented at these meetings. All participants at the meeting shall be familiar with Project and authorized to conclude matters relating to the Work.
2. Agenda: Review and correct or approve minutes of previous progress meeting. Review other items of significance that could affect progress. Include topics for discussion as appropriate to status of Project.

    a. Contractor's Construction Schedule: Review progress since the last meeting. Determine whether each activity is on time, ahead of schedule, or behind schedule, in relation to Contractor's construction schedule. Determine how construction behind schedule will be expedited; secure commitments from parties involved to do so. Discuss whether schedule revisions are required to ensure that current and subsequent activities will be completed within the Contract Time.

        1) Review schedule for next period.

    b. Review present and future needs of each entity present, including the following:

        1) Interface requirements.
        2) Sequence of operations.
        3) Status of submittals.
        4) Status of LEED documentation.
        5) Deliveries.
        6) Off-site fabrication.
        7) Access.
        8) Site utilization.
        9) Temporary facilities and controls.
        10) Progress cleaning.
        11) Quality and work standards.
        12) Status of correction of deficient items.
        13) Field observations.
        14) Status of RFIs.
        15) Status of proposal requests.
        16) Pending changes.
        17) Status of Change Orders.
        18) Pending claims and disputes.
        19) Documentation of information for payment requests.

3. Minutes: The contractor shall be responsible for conducting the meeting will record and distribute the meeting minutes to each party present and to parties requiring information.

    a. Schedule Updating: The contractor shall revise the construction schedule after each progress meeting where revisions to the schedule have been made or recognized. Issue revised schedule concurrently with the report of each meeting.

PART 2 - PRODUCTS (Not Used)

PART 3 - EXECUTION (Not Used)

END OF SECTION 013100

THIS PAGE LEFT INTENTIONALLY BLANK.

SECTION 013200 - CONSTRUCTION PROGRESS DOCUMENTATION

1.1 SUMMARY

A. Section includes administrative and procedural requirements for documenting the progress of construction during performance of the Work, including the following:

1. Contractor's Construction Schedule.
2. Construction schedule updating reports.
3. Daily construction reports.
4. Site condition reports.

1.2 DEFINITIONS

A. Activity: A discrete part of a project that can be identified for planning, scheduling, monitoring, and controlling the construction Project. Activities included in a construction schedule consume time and resources.

1. Critical Activity: An activity on the critical path that must start and finish on the planned early start and finish times.
2. Predecessor Activity: An activity that precedes another activity in the network.
3. Successor Activity: An activity that follows another activity in the network.

B. CPM: Critical path method, which is a method of planning and scheduling a construction project where activities are arranged based on activity relationships. Network calculations determine when activities can be performed and the critical path of Project.

C. Critical Path: The longest connected chain of interdependent activities through the network schedule that establishes the minimum overall Project duration and contains no float.

D. Event: The starting or ending point of an activity.

E. Float: The measure of leeway in starting and completing an activity.

1. Float time **s not for the exclusive use or benefit of either Owner or Contractor, but is a jointly owned, expiring Project resource available to both parties as needed to meet schedule milestones and Contract completion date**.
2. Free float is the amount of time an activity can be delayed without adversely affecting the early start of the successor activity.
3. Total float is the measure of leeway in starting or completing an activity without adversely affecting the planned Project completion date.

1.3 INFORMATIONAL SUBMITTALS

A. Format for Submittals: Submit required submittals in the following format:

1. Working electronic copy of schedule file.
2. PDF file.

B. Startup Network Diagram: Of size required to display entire network for entire construction period. Show logic ties for activities.

C. Contractor's Construction Schedule: Initial schedule, of size required to display entire schedule for entire construction period.

D. Construction Schedule Updating Reports: Submit with Applications for Payment.

E. Daily Construction Reports: Submit at **monthly** intervals.

F. Site Condition Reports: Submit at time of discovery of differing conditions.

1.4 COORDINATION

A. Coordinate Contractor's Construction Schedule with the schedule of values, **list of subcontracts,** submittal schedule, progress reports, payment requests, and other required schedules and reports.

1. Secure time commitments for performing critical elements of the Work from entities involved.
2. Coordinate each construction activity in the network with other activities and schedule them in proper sequence.

1.5 CONTRACTOR'S CONSTRUCTION SCHEDULE

A. Computer Scheduling Software: Prepare schedules using current version of a program that has been developed specifically to manage construction schedules.

B. Time Frame: Extend schedule from date established for **the Notice to Proceed** to date of f**inal completion. Clearly note the Date of Substantial Completion on the schedule.**

1. Contract completion date shall not be changed by submission of a schedule that shows an early completion date, unless specifically authorized by Change Order.

C. Activities: Treat each floor or separate area as a separate numbered activity for each main element of the Work. Comply with the following:

1. Procurement Activities: Include procurement process activities for the following long lead items and major items, requiring a cycle of more than 60 days, as separate activities in schedule. Procurement cycle activities include, but are not limited to, submittals, approvals, purchasing, fabrication, and delivery.

    a. Mechanical, Electrical Plumbing, Roofing.

2. Submittal Review Time: Include review and resubmittal times indicated in Section 013300 "Submittal Procedures" in schedule. Coordinate submittal review times in Contractor's Construction Schedule with submittal schedule.
3. Startup and Testing Time: Include no fewer than **15** days for startup and testing.
4. Substantial Completion: Indicate completion in advance of date established for Substantial Completion, and allow time for Architect's administrative procedures necessary for certification of Substantial Completion.

5. Punch List and Final Completion: Include not more than **30** days for completion of punch list items and final completion.

D. Constraints: Include constraints and work restrictions indicated in the Contract Documents and as follows in schedule, and show how the sequence of the Work is affected.

1. Phasing: Arrange list of activities on schedule by phase.
2. Owner-Furnished Products: Include a separate activity for each product. Include delivery date indicated in Section 011000 "Summary." Delivery dates indicated stipulate the earliest possible delivery date.

E. Milestones: Include milestones indicated in the Contract Documents in schedule, including, but not limited to, the Notice to Proceed, Substantial Completion, and final completion **.**

F. Upcoming Work Summary: Prepare summary report indicating activities scheduled to occur or commence prior to submittal of next schedule update. Summarize the following issues:

1. Unresolved issues.
2. Unanswered Requests for Information.
3. Rejected or unreturned submittals.
4. Notations on returned submittals.
5. Pending modifications affecting the Work and the Contract Time.

G. Contractor's Construction Schedule Updating: At **monthly** intervals, update schedule to reflect actual construction progress and activities. Issue schedule [**one week** before each regularly scheduled progress meeting.

1. Revise schedule immediately after each meeting or other activity where revisions have been recognized or made. Issue updated schedule concurrently with the report of each such meeting.
2. Include a report with updated schedule that indicates every change, including, but not limited to, changes in logic, durations, actual starts and finishes, and activity durations.
3. As the Work progresses, indicate final completion percentage for each activity.

H. Recovery Schedule: When periodic update indicates the Work is [**14** or more calendar days behind the current approved schedule, submit a separate recovery schedule indicating means by which Contractor intends to regain compliance with the schedule. Indicate changes to working hours, working days, crew sizes, equipment required to achieve compliance, and date by which recovery will be accomplished.

I. Distribution: Distribute copies of approved schedule to Architect and Owner, separate contractors, testing and inspecting agencies, and other parties identified by Contractor with a need-to-know schedule responsibility.

1. Post copies in Project meeting rooms and temporary field offices.
2. When revisions are made, distribute updated schedules to the same parties and post in the same locations. Delete parties from distribution when they have completed their assigned portion of the Work and are no longer involved in performance of construction activities.

1.6 GANTT-CHART SCHEDULE REQUIREMENTS

A. Gantt-Chart Schedule: Submit a comprehensive, fully developed, horizontal, Gantt-chart-type, Contractor's Construction Schedule within **30** days of date established for **the Notice to Proceed**.

B. Preparation: Indicate each significant construction activity separately. Identify first workday of each week with a continuous vertical line.

1. For construction activities that require three months or longer to complete, indicate an estimated completion percentage in **10** percent increments within time bar.

1.7 REPORTS

A. Daily Construction Reports: Prepare a daily construction report recording the following information concerning events at Project site:

1. List of subcontractors at Project site.
2. List of separate contractors at Project site.
3. Approximate count of personnel at Project site.
4. Equipment at Project site.
5. Material deliveries.
6. High and low temperatures and general weather conditions, including presence of rain or snow.
7. Testing and inspection.
8. Accidents.
9. Meetings and significant decisions.
10. Stoppages, delays, shortages, and losses.
11. Meter readings and similar recordings.
12. Emergency procedures.
13. Orders and requests of authorities having jurisdiction.
14. Change Orders received and implemented.
15. Equipment or system tests and startups.
16. Partial completions and occupancies.
17. Substantial Completions authorized.

B. Site Condition Reports: Immediately on discovery of a difference between site conditions and the Contract Documents, prepare and submit a detailed report. Submit with a Request for Information. Include a detailed description of the differing conditions, together with recommendations for changing the Contract Documents.

PART 2 - PRODUCTS (Not Used)

PART 3 - EXECUTION (Not Used)

END OF SECTION 013200

SECTION 013233 - PHOTOGRAPHIC DOCUMENTATION

1.1 RELATED DOCUMENTS

A. Drawings and general provisions of the Contract, including General and Supplementary Conditions and other Division 01 Specification Sections, apply to this Section.

1.2 SUMMARY

A. Section includes administrative and procedural requirements for the following:

1. Preconstruction photographs.
2. Concealed Work photographs.
3. Periodic construction photographs.
4. Final Completion construction photographs.
5. Preconstruction video recordings.
6. Periodic construction video recordings.
7. Construction webcam.

B. Related Requirements:

1. Section 017700 "Closeout Procedures" for submitting photographic documentation as Project Record Documents at Project closeout.
2. Section 017900 "Demonstration and Training" for submitting video recordings of demonstration of equipment and training of Owner's personnel.
3. Section 024119 "Selective Demolition" for photographic documentation before selective demolition operations commence.

1.3 INFORMATIONAL SUBMITTALS

A. Key Plan: Submit key plan of Project site and building with notation of vantage points marked for location and direction of each **photograph and video recording**. Indicate elevation or story of construction. Include same information as corresponding photographic documentation.

B. Digital Photographs: Submit image files within **three** days of taking photographs.

1. Submit photo **on thumb -drive**; include copy of key plan indicating each photograph's location and direction.
2. Identification: Provide the following information with each image description **in file metadata tag**:

a. Name of Project.
b. Name and contact information for photographer.
c. Name of Architect **and Construction Manager**.
d. Name of Contractor.
e. Date photograph was taken.
f. Description of location, vantage point, and direction.
g. Unique sequential identifier keyed to accompanying key plan.

C. Video Recordings: Submit video recordings within **seven** days of recording.

1. Submit video recordings **on CD-ROM or thumb drive**. Include copy of key plan indicating each video's location and direction.
2. Identification: With each submittal, provide the following information **in file metadata tag**:

    a. Name of Project.
    b. Name and address of photographer.
    c. Name of Architect **and Construction Manager**.
    d. Name of Contractor.
    e. Date video recording was recorded.
    f. Description of vantage point, indicating location, direction (by compass point), and elevation or story of construction.

3. Transcript: Prepared on 8-1/2-by-11-inch (215-by-280-mm) paper, punched and bound in three-ring binders. Provide label on front and spine. Include a cover sheet with label information. Include name of Project and date of video recording on each page.

1.4 QUALITY ASSURANCE

A. Photographer Qualifications: An individual who has been regularly engaged as a professional photographer of construction projects for not less than three years.

1.5 FORMATS AND MEDIA

A. Digital Photographs: Provide color images in JPG format, produced by a digital camera with minimum sensor size of **12** megapixels, and at an image resolution of not less than **3200 by 2400** pixels, **and with vibration-reduction technology**. Use flash in low light levels or backlit conditions.

B. Digital Video Recordings: Provide high-resolution, digital video in MPEG format, produced by a digital camera with minimum sensor resolution of [**12** megapixels and capable of recording in full high-definition mode **with vibration-reduction technology**. Provide supplemental lighting in low light levels or backlit conditions.

C. Digital Images: Submit digital media as originally recorded in the digital camera, without alteration, manipulation, editing, or modifications using image-editing software.

D. Metadata: Record accurate date and time from camera.

E. File Names: Name media files with **date**, **Project area** and sequential numbering suffix.

1.6 CONSTRUCTION PHOTOGRAPHS

A. Photographer: Engage a qualified photographer to take construction photographs.

B. General: Take photographs with maximum depth of field and in focus.

1. Maintain key plan with each set of construction photographs that identifies each photographic location.

C. Preconstruction Photographs: Before commencement of the Work, take photographs of Project site and surrounding properties, including existing items to remain during construction, from different vantage points, as directed by **Architect**.

1. Flag **excavation areas** and **construction limits** before taking construction photographs.
2. Take **20** photographs to show existing conditions adjacent to property before starting the Work.
3. Take **20** photographs of existing buildings either on or adjoining property, to accurately record physical conditions at start of construction.
4. Take additional photographs as required to record settlement or cracking of adjacent structures, pavements, and improvements.

D. Concealed Work Photographs: Before proceeding with installing work that will conceal other work, take photographs sufficient in number, with annotated descriptions, to record nature and location of concealed Work, including, but not limited to, the following:

1. Underground utilities.
2. Underslab services.
3. Piping.
4. Electrical conduit.
5. Waterproofing and weather-resistant barriers.

E. Periodic Construction Photographs: Take **50** photographs **weekly coinciding with the cutoff date associated with each Application for Payment**. Select vantage points to show status of construction and progress since last photographs were taken.

F. Final Completion Construction Photographs: Take **20** photographs after date of Substantial Completion for submission as Project Record Documents. **Architect**] will inform photographer of desired vantage points.

1.7 CONSTRUCTION VIDEO RECORDINGS

A. Video Recording Photographer: Engage a qualified videographer to record construction video recordings.

B. Narration: Describe scenes on video recording by **audio narration by microphone while or dubbing audio narration off-site after** video recording is recorded. Include description of items being viewed, recent events, and planned activities. At each change in location, describe vantage point, location, direction (by compass point), and elevation or story of construction.

1. Confirm date and time at beginning and end of recording.
2. Begin each video recording with name of Project, Contractor's name, videographer's name, and Project location.

C. Transcript: Provide a typewritten transcript of the narration. Display images and running time captured from video recording opposite the corresponding narration segment.

D. Preconstruction Video Recording: Before starting **excavation**, **demolition**, **construction**, record video recording of Project site and surrounding properties from different vantage points, as directed by **Architect**

1. Flag **excavation areas**, **construction limits** before recording construction video recordings.
2. Show existing conditions adjacent to Project site before starting the Work.
3. Show existing buildings either on or adjoining Project site to accurately record physical conditions at the start of **excavation**, **demolition**, **construction**.
4. Show protection efforts by Contractor.

E. Periodic Construction Video Recordings: Record video recording **monthly coinciding with the cutoff date associated with each Application for Payment**. Select vantage points to show status of

construction and progress since last video recordings were recorded. Minimum recording time shall be **30** minutes(s).

PART 2 - PRODUCTS (Not Used)

PART 3 - EXECUTION (Not Used)

END OF SECTION 013233

SECTION 01 33 00 - SUBMITTAL PROCEDURES

PART 1 - GENERAL

1.1 SUMMARY

A. Section includes requirements for the submittal schedule and administrative and procedural requirements for submitting Shop Drawings, Product Data, Samples, and other submittals.

B. Related Sections:

1. Division 01 Section "Construction Progress Documentation" for submitting schedules and reports, including Contractor's construction schedule.
2. Division 01 Section "Operation and Maintenance Data" for submitting operation and maintenance manuals.
3. Owner' Non-Technical Specification or Division 01 Section "Project Record Documents" for submitting record Drawings, record Specifications, and record Product Data.
4. Non Technical specifications Section C-11.

1.2 DEFINITIONS

A. Action Submittals: Written and graphic information and physical samples that require Architect's responsive action.

B. Informational Submittals: Written and graphic information and physical samples that do not require Architect's responsive action. Submittals may be rejected for not complying with requirements.

1.3 ACTION SUBMITTALS

A. Submittal Schedule: Within thirty days of Notice to Proceed, submit a schedule of submittals, arranged in chronological order by dates required by construction schedule. Include time required for review, ordering, manufacturing, fabrication, and delivery when establishing dates. Include additional time required for making corrections or modifications to submittals noted by the Architect and additional time for handling and reviewing submittals required by those corrections.

1.4 SUBMITTAL ADMINISTRATIVE REQUIREMENTS

A. Digital Data Files: Electronic copies of CAD Drawings of the Contract Drawings, floor plans and elevations only, will be provided upon request by Architect for Contractor's use in preparing submittals.

1. Architect will furnish Contractor one set of digital data drawing files of the Contract Drawings upon request by Contractor for use in preparing Shop Drawings.

a. Architect makes no representations as to the accuracy or completeness of digital data drawing files as they relate to the Contract Drawings.
b. Contractor shall execute a data licensing agreement in the form of AIA Document C106, Digital Data Licensing Agreement.

B. Coordination: Coordinate preparation and processing of submittals with performance of construction activities.

1. Coordinate each submittal with fabrication, purchasing, testing, delivery, other submittals, and related activities that require sequential activity.
2. Coordinate transmittal of different types of submittals for related parts of the Work so processing will not be delayed because of need to review submittals concurrently for coordination.

    a. Architect reserves the right to withhold action on a submittal requiring coordination with other submittals until related submittals are received.

C. Processing Time: Allow time for submittal review, including time for resubmittals, as follows. Time for review shall commence on Architect's receipt of submittal. No extension of the Contract Time will be authorized because of failure to transmit submittals enough in advance of the Work to permit processing, including resubmittals.

1. Initial Review: Allow 15 days for initial review of each submittal. Allow additional time if coordination with subsequent submittals is required. Architect will advise Contractor when a submittal being processed must be delayed for coordination.
2. Intermediate Review: If intermediate submittal is necessary, process it in same manner as initial submittal.
3. Resubmittal Review: Allow 15 days for review of each resubmittal.

D. Identification and Information: Place a permanent label or title block on each paper copy submittal item for identification.

1. Indicate name of firm or entity that prepared each submittal on label or title block.
2. Provide a space approximately 150 by 200 mm (6 by 8 inches) on label or beside title block to record Contractor's review and approval markings and action taken by Architect.
3. Include the following information for processing and recording action taken:

    a. Project name.
    b. Date.
    c. Name of Architect.
    d. Name of Construction Manager.
    e. Name of Contractor.
    f. Name of subcontractor.
    g. Name of supplier.
    h. Name of manufacturer.
    i. Submittal number or other unique identifier, including revision identifier.

        1) Submittal number shall use Specification Section number followed by a decimal point and then a sequential number (e.g., 061000.01). Resubmittals shall include an alphabetic suffix after another decimal point (e.g., 061000.01.A).

    j. Number and title of appropriate Specification Section.
    k. Drawing number and detail references, as appropriate.
    l. Location(s) where product is to be installed, as appropriate.
    m. Other necessary identification.

E. Identification and Information: Identify and incorporate information in each electronic submittal file as follows:

1. Assemble complete submittal package into a single indexed file with links enabling navigation to each item.

2. Name file with submittal number or other unique identifier, including revision identifier.

    a. File name shall use project identifier and Specification Section number followed by a decimal point and then a sequential number (e.g., LNHS-061000.01). Resubmittals shall include an alphabetic suffix after another decimal point (e.g., LNHS-061000.01.A).

3. Provide means for insertion to permanently record Contractor's review and approval markings and action taken by Architect.
4. Include the following information on an inserted cover sheet:

    a. Project name.
    b. Date.
    c. Name and address of Architect.
    d. Name of Construction Manager.
    e. Name of Contractor.
    f. Name of firm or entity that prepared submittal.
    g. Name of subcontractor.
    h. Name of supplier.
    i. Name of manufacturer.
    j. Number and title of appropriate Specification Section.
    k. Drawing number and detail references, as appropriate.
    l. Location(s) where product is to be installed, as appropriate.
    m. Related physical samples submitted directly.
    n. Other necessary identification.

F. Options: Identify options requiring selection by the Architect.

G. Deviations: Identify deviations from the Contract Documents on submittals.

H. Additional Paper Copies: Unless additional copies are required for final submittal, and unless Architect observes noncompliance with provisions in the Contract Documents, initial submittal may serve as final submittal.

1. Submit one copy of submittal to concurrent reviewer in addition to specified number of copies to Architect.

I. Transmittal: Assemble each submittal individually and appropriately for transmittal and handling. Transmit each submittal using a transmittal form. Architect will discard submittals received from sources other than Contractor.

1. Transmittal Form: Use AIA Document G810.
2. On an attached separate sheet, prepared on Contractor's letterhead, record relevant information, requests for data, revisions other than those requested by Architect on previous submittals, and deviations from requirements in the Contract Documents, including minor variations and limitations. Include same identification information as related submittal.

J. Resubmittals: Make resubmittals in same form and number of copies as initial submittal.

1. Note date and content of previous submittal.
2. Note date and content of revision in label or title block and clearly indicate extent of revision.
3. Resubmit submittals until they are marked with approval notation from Architect's action stamp.

K. Distribution: Furnish copies of final submittals to manufacturers, subcontractors, suppliers, fabricators, installers, authorities having jurisdiction, and others as necessary for performance of construction activities. Show distribution on transmittal forms.

L. Use for Construction: Use only final submittals that are marked with approval notation from Architect's action stamp.

PART 2 - PRODUCTS

2.1 SUBMITTAL PROCEDURES

A. General Submittal Procedure Requirements:

1. Action Submittals: Submit three paper copies of each submittal, unless otherwise indicated. Architect will return two copies.
2. Informational Submittals: Submit two paper copies of each submittal, unless otherwise indicated. Architect will not return copies.
3. Closeout Submittals and Maintenance Material Submittals: Comply with requirements specified in Division 01 Section "Closeout Procedures."
4. Certificates and Certifications Submittals: Provide a statement that includes signature of entity responsible for preparing certification. Certificates and certifications shall be signed by an officer or other individual authorized to sign documents on behalf of that entity.

    a. Provide a digital signature with digital certificate on electronically-submitted certificates and certifications where indicated.
    b. Provide a notarized statement on original paper copy certificates and certifications where indicated.

5. Test and Inspection Reports Submittals: Comply with requirements specified in Division 01 Section "Quality Requirements."

B. Product Data: Collect information into a single submittal for each element of construction and type of product or equipment.

1. If information must be specially prepared for submittal because standard published data are not suitable for use, submit as Shop Drawings, not as Product Data.
2. Mark each copy of each submittal to show which products and options are applicable.
3. Include the following information, as applicable:

    a. Manufacturer's catalog cuts.
    b. Manufacturer's product specifications.
    c. Standard color charts.
    d. Statement of compliance with specified referenced standards.
    e. Testing by recognized testing agency.
    f. Application of testing agency labels and seals.
    g. Notation of coordination requirements.
    h. Availability and delivery time information.

4. For equipment, include the following in addition to the above, as applicable:

    a. Wiring diagrams showing factory-installed wiring.
    b. Printed performance curves.
    c. Operational range diagrams.
    d. Clearances required to other construction, if not indicated on accompanying Shop Drawings.

5. Submit Product Data before or concurrent with Samples.

6. Submit Product Data in the following format:

    a. Three paper copies of Product Data, unless otherwise indicated. Architect will return two copies.

C. Shop Drawings: Prepare Project-specific information, drawn accurately to scale. Do not base Shop Drawings on reproductions of the Contract Documents or standard printed data, unless submittal based upon Architect's digital data drawing files is otherwise permitted.

1. Preparation: Fully illustrate requirements in the Contract Documents. Include the following information, as applicable:

    a. Identification of products.
    b. Schedules.
    c. Compliance with specified standards.
    d. Notation of coordination requirements.
    e. Notation of dimensions established by field measurement.
    f. Relationship and attachment to adjoining construction clearly indicated.
    g. Seal and signature of professional engineer if specified.

2. Sheet Size: Except for templates, patterns, and similar full-size drawings, submit Shop Drawings on sheets at least 215 by 280 mm (8-1/2 by 11 inches) but no larger than 600 by 900 mm (24 by 36 inches).
3. Submit Shop Drawings in the following format:

    a. Two opaque (bond) copies of each submittal. Architect will return one copy.

D. Samples: Submit Samples for review of kind, color, pattern, and texture for a check of these characteristics with other elements and for a comparison of these characteristics between submittal and actual component as delivered and installed.

1. Transmit Samples that contain multiple, related components such as accessories together in one submittal package.
2. Identification: Attach label on unexposed side of Samples that includes the following:

    a. Generic description of Sample.
    b. Product name and name of manufacturer.
    c. Sample source.
    d. Number and title of applicable Specification Section.

3. Disposition: Maintain sets of approved Samples at Project site, available for quality-control comparisons throughout the course of construction activity. Sample sets may be used to determine final acceptance of construction associated with each set.

    a. Samples that may be incorporated into the Work are indicated in individual Specification Sections. Such Samples must be in an undamaged condition at time of use.
    b. Samples not incorporated into the Work, or otherwise designated as Owner's property, are the property of Contractor.

4. Samples for Initial Selection: Submit manufacturer's color charts consisting of units or sections of units showing the full range of colors, textures, and patterns available.

    a. Number of Samples: Submit one full set(s) of available choices where color, pattern, texture, or similar characteristics are required to be selected from manufacturer's product line. Architect will return submittal with options selected.

5. Samples for Verification: Submit full-size units or Samples of size indicated, prepared from same material to be used for the Work, cured and finished in manner specified, and physically identical with material or product proposed for use, and that show full range of color and texture variations expected. Samples include, but are not limited to, the following: partial sections of manufactured or fabricated components; small cuts or containers of materials; complete units of repetitively used materials; swatches showing color, texture, and pattern; color range sets; and components used for independent testing and inspection.

    a. Number of Samples: Submit two sets of Samples. Architect will retain one Sample sets; remainder will be returned.

        1) If variation in color, pattern, texture, or other characteristic is inherent in material or product represented by a Sample, submit at least three sets of paired units that show approximate limits of variations.

E. Contractor's Construction Schedule: Comply with requirements specified in Division 01 Section "Construction Progress Documentation."

F. Application for Payment: Comply with requirements specified in Division 01 Section "Payment Procedures."

G. Schedule of Values: Comply with requirements specified in Division 01 Section "Payment Procedures."

H. Subcontract List: Prepare a written summary identifying individuals or firms proposed for each portion of the Work, including those who are to furnish products or equipment fabricated to a special design. Use CSI Form 1.5A.

1. Submit subcontract list in the following format:

    a. Number of Copies: Two paper copies of subcontractor list, unless otherwise indicated. Architect will return one copy.

I. Coordination Drawings: Comply with requirements specified in Division 01 Section "Project Management and Coordination."

J. Qualification Data: Prepare written information that demonstrates capabilities and experience of firm or person. Include lists of completed projects with project names and addresses, contact information of architects and owners, and other information specified.

K. Welding Certificates: Prepare written certification that welding procedures and personnel comply with requirements in the Contract Documents. Submit record of Welding Procedure Specification and Procedure Qualification Record on American Welding Society (AWS) forms. Include names of firms and personnel certified.

L. Installer Certificates: Submit written statements on manufacturer's letterhead certifying that Installer complies with requirements in the Contract Documents and, where required, is authorized by manufacturer for this specific Project.

M. Manufacturer Certificates: Submit written statements on manufacturer's letterhead certifying that manufacturer complies with requirements in the Contract Documents. Include evidence of manufacturing experience where required.

N. Product Certificates: Submit written statements on manufacturer's letterhead certifying that product complies with requirements in the Contract Documents.

O. Material Certificates: Submit written statements on manufacturer's letterhead certifying that material complies with requirements in the Contract Documents.

P. Material Test Reports: Submit reports written by a qualified testing agency, on testing agency's standard form, indicating and interpreting test results of material for compliance with requirements in the Contract Documents.

Q. Product Test Reports: Submit written reports indicating current product produced by manufacturer complies with requirements in the Contract Documents. Base reports on evaluation of tests performed by manufacturer and witnessed by a qualified testing agency, or on comprehensive tests performed by a qualified testing agency.

R. Research Reports: Submit written evidence, from a model code organization acceptable to authorities having jurisdiction, that product complies with building code in effect for Project.

S. Schedule of Tests and Inspections: Comply with requirements specified in Division 01 Section "Quality Requirements."

T. Field Test Reports: Submit reports indicating and interpreting results of field tests performed either during installation of product or after product is installed in its final location, for compliance with requirements in the Contract Documents.

U. Maintenance Data: Comply with requirements specified in Division 01 Section "Operation and Maintenance Data."

V. Design Data: Prepare and submit written and graphic information, including, but not limited to, performance and design criteria, list of applicable codes and regulations, and calculations. Include list of assumptions and other performance and design criteria and a summary of loads. Include load diagrams if applicable. Provide name and version of software, if any, used for calculations. Include page numbers.

2.2 DELEGATED-DESIGN SERVICES

A. Performance and Design Criteria: Where professional design services or certifications by a design professional are specifically required of Contractor by the Contract Documents, provide products and systems complying with specific performance and design criteria indicated.

1. If criteria indicated are not sufficient to perform services or certification required, submit a written request for additional information to Architect.

B. Delegated-Design Services Certification: In addition to Shop Drawings, Product Data, and other required submittals, submit three paper copies of certificate, signed and sealed by the responsible design professional, for each product and system specifically assigned to Contractor to be designed or certified by a design professional.

1. Indicate that products and systems comply with performance and design criteria in the Contract Documents. Include list of codes, loads, and other factors used in performing these services.

PART 3 - EXECUTION

3.1 CONTRACTOR'S REVIEW

A. Action and Informational Submittals: Review each submittal and check for coordination with other Work of the Contract and for compliance with the Contract Documents. Note corrections and field dimensions. Mark with approval stamp before submitting to Architect.

B. Project Closeout and Maintenance/Material Submittals: Refer to requirements in Division 01 Section "Closeout Procedures."

C. Approval Stamp: Stamp each submittal with a uniform, approval stamp. Include Project name and location, submittal number, Specification Section title and number, name of reviewer, date of Contractor's approval, and statement certifying that submittal has been reviewed, checked, and approved for compliance with the Contract Documents.

3.2 ARCHITECT'S ACTION

A. General: Architect will not review submittals that do not bear Contractor's approval stamp and will return them without action.

B. Action Submittals: Architect will review each submittal, make marks to indicate corrections or modifications required, and return it. Architect will stamp each submittal with an action stamp and will mark stamp appropriately to indicate action.

C. Informational Submittals: Architect will review each submittal and will not return it, or will return it if it does not comply with requirements. Architect will forward each submittal to appropriate party.

D. Incomplete submittals are not acceptable, will be considered nonresponsive, and will be returned without review.

E. Submittals not required by the Contract Documents may not be reviewed and may be discarded.

END OF SECTION 01 33 00

SECTION 014000 - QUALITY REQUIREMENTS

PART 1 - GENERAL

1.1 SUMMARY

A. Section includes administrative and procedural requirements for quality assurance and quality control.

B. Testing and inspection services are required to verify compliance with requirements specified or indicated. These services do not relieve Contractor of responsibility for compliance with the Contract Document requirements.

1. Specified tests, inspections, and related actions do not limit Contractor's other quality-assurance and quality-control procedures that facilitate compliance with the Contract Document requirements.
2. Requirements for Contractor to provide quality-assurance and quality-control services required by Architect, Owner, or authorities having jurisdiction are not limited by provisions of this Section.

1.2 DEFINITIONS

A. Experienced: When used with an entity or individual, "experienced" unless otherwise further described means having successfully completed a minimum of **five** previous projects similar in nature, size, and extent to this Project; being familiar with special requirements indicated; and having complied with requirements of authorities having jurisdiction.

B. Field Quality-Control Tests and Inspections: Tests and inspections that are performed on-site for installation of the Work and for completed Work.

C. Installer/Applicator/Erector: Contractor or another entity engaged by Contractor as an employee, Subcontractor, or Sub-subcontractor, to perform a particular construction operation, including installation, erection, application, assembly, and similar operations.

1. Use of trade-specific terminology in referring to a Work result does not require that certain construction activities specified apply exclusively to specific trade(s).

D. Mockups: Physical assemblies of portions of the Work constructed to establish the standard by which the Work will be judged. Mockups are not Samples.

1. Mockups are used for one or more of the following:

a. Verify selections made under Sample submittals.
b. Demonstrate aesthetic effects.
c. Demonstrate the qualities of products and workmanship.
d. Demonstrate successful installation of interfaces between components and systems.
e. Perform preconstruction testing to determine system performance.

2. Product Mockups: Mockups that may include multiple products, materials, or systems specified in a single Section.
3. In-Place Mockups: Mockups constructed on-site in their actual final location as part of permanent construction.

E. Preconstruction Testing: Tests and inspections performed specifically for Project before products and materials are incorporated into the Work, to verify performance or compliance with specified criteria. Unless otherwise indicated, copies of reports of tests or inspections performed for other than the Project do not meet this definition.

F. Product Tests: Tests and inspections that are performed by a nationally recognized testing laboratory (NRTL) according to 29 CFR 1910.7, by a testing agency accredited according to NIST's National Voluntary Laboratory Accreditation Program (NVLAP), or by a testing agency qualified to conduct product testing and acceptable to authorities having jurisdiction, to establish product performance and compliance with specified requirements.

G. Source Quality-Control Tests and Inspections: Tests and inspections that are performed at the source; for example, plant, mill, factory, or shop.

H. Testing Agency: An entity engaged to perform specific tests, inspections, or both. The term "testing laboratory" has the same meaning as the term "testing agency."

I. Quality-Assurance Services: Activities, actions, and procedures performed before and during execution of the Work to guard against defects and deficiencies and substantiate that proposed construction will comply with requirements.

J. Quality-Control Services: Tests, inspections, procedures, and related actions during and after execution of the Work to evaluate that actual products incorporated into the Work and completed construction comply with requirements. Contractor's quality-control services do not include contract administration activities performed by Architect.

1.3 DELEGATED DESIGN SERVICES

A. Performance and Design Criteria: Where professional design services or certifications by a design professional are specifically required of Contractor by the Contract Documents, provide products and systems complying with specific performance and design criteria indicated.

1. If criteria indicated are not sufficient to perform services or certification required, submit a written request for additional information to Architect.

B. Delegated Design Services Statement: Submit a statement, signed and sealed by the responsible design professional licensed in the State of Florida, for each product and system specifically assigned to Contractor to be designed or certified by a design professional, indicating that the products and systems are in compliance with performance and design criteria indicated. Include list of codes, loads, and other factors used in performing these services.

1.4 CONFLICTING REQUIREMENTS

A. Conflicting Standards and Other Requirements: If compliance with two or more standards or requirements is specified and the standards or requirements establish different or conflicting requirements for minimum quantities or quality levels, inform the Architect regarding the conflict and obtain clarification prior to proceeding with the Work. Refer conflicting requirements that are different, but apparently equal, to Architect for clarification before proceeding.

B. Minimum Quantity or Quality Levels: The quantity or quality level shown or specified is the minimum provided or performed. The actual installation may comply exactly with the minimum quantity or quality specified, or it may exceed the minimum within reasonable limits. To comply with these requirements,

indicated numeric values are minimum or maximum, as appropriate, for the context of requirements. Refer uncertainties to Architect for a decision before proceeding.

1.5 INFORMATIONAL SUBMITTALS

A. Contractor's Statement of Responsibility: When required by authorities having jurisdiction, submit copy of written statement of responsibility submitted to authorities having jurisdiction before starting work on the following systems:

1. Seismic-force-resisting system, designated seismic system, or component listed in the Statement of Special Inspections.
2. Main wind-force-resisting system or a wind-resisting component listed in the Statement of Special Inspections.

B. Testing Agency Qualifications: For testing agencies specified in "Quality Assurance" Article to demonstrate their capabilities and experience. Include proof of qualifications in the form of a recent report on the inspection of the testing agency by a recognized authority.

C. Permits, Licenses, and Certificates: For Owner's record, submit copies of permits, licenses, certifications, inspection reports, releases, jurisdictional settlements, notices, receipts for fee payments, judgments, correspondence, records, and similar documents established for compliance with standards and regulations bearing on performance of the Work.

1.6 REPORTS AND DOCUMENTS

A. Test and Inspection Reports: Prepare and submit certified written reports specified in other Sections. Include the following:

1. Date of issue.
2. Project title and number.
3. Name, address, telephone number, and email address of testing agency.
4. Dates and locations of samples and tests or inspections.
5. Names of individuals making tests and inspections.
6. Description of the Work and test and inspection method.
7. Identification of product and Specification Section.
8. Complete test or inspection data.
9. Test and inspection results and an interpretation of test results.
10. Record of temperature and weather conditions at time of sample taking and testing and inspection.
11. Comments or professional opinion on whether tested or inspected Work complies with the Contract Document requirements.
12. Name and signature of laboratory inspector.
13. Recommendations on retesting and reinspecting.

B. Manufacturer's Technical Representative's Field Reports: Prepare written information documenting manufacturer's technical representative's tests and inspections specified in other Sections. Include the following:

1. Statement on condition of substrates and their acceptability for installation of product.
2. Statement that products at Project site comply with requirements.
3. Summary of installation procedures being followed, whether they comply with requirements and, if not, what corrective action was taken.
4. Results of operational and other tests and a statement of whether observed performance complies with requirements.
5. Other required items indicated in individual Specification Sections.

C. Factory-Authorized Service Representative's Reports: Prepare written information documenting manufacturer's factory-authorized service representative's tests and inspections specified in other Sections. Include the following:

1. Statement that equipment complies with requirements.
2. Results of operational and other tests and a statement of whether observed performance complies with requirements.
3. Other required items indicated in individual Specification Sections.

1.7 QUALITY ASSURANCE

A. Qualifications paragraphs in this article establish the minimum qualification levels required; individual Specification Sections specify additional requirements.

B. Manufacturer Qualifications: A firm experienced in manufacturing products or systems similar to those indicated for this Project and with a record of successful in-service performance, as well as sufficient production capacity to produce required units. As applicable, procure products from manufacturers able to meet qualification requirements, warranty requirements, and technical or factory-authorized service representative requirements.

C. Fabricator Qualifications: A firm experienced in producing products similar to those indicated for this Project and with a record of successful in-service performance, as well as sufficient production capacity to produce required units.

D. Installer Qualifications: A firm or individual experienced in installing, erecting, applying, or assembling work similar in material, design, and extent to that indicated for this Project, whose work has resulted in construction with a record of successful in-service performance.

E. Professional Engineer Qualifications: A professional engineer who is legally qualified to practice in jurisdiction where Project is located and who is experienced in providing engineering services of the kind indicated. Engineering services are defined as those performed for installations of the system, assembly, or product that are similar in material, design, and extent to those indicated for this Project.

F. Specialists: Certain Specification Sections require that specific construction activities be performed by entities who are recognized experts in those operations. Specialists will satisfy qualification requirements indicated and engage in the activities indicated.

1. Requirements of authorities having jurisdiction supersede requirements for specialists.

G. Testing and Inspecting Agency Qualifications: An NRTL, an NVLAP, or an independent agency with the experience and capability to conduct testing and inspection indicated, as documented according to **ASTM E329**; and with additional qualifications specified in individual Sections; and, where required by authorities having jurisdiction, that is acceptable to authorities.

H. Manufacturer's Technical Representative Qualifications: An authorized representative of manufacturer who is trained and approved by manufacturer to observe and inspect installation of manufacturer's products that are similar in material, design, and extent to those indicated for this Project.

I. Factory-Authorized Service Representative Qualifications: An authorized representative of manufacturer who is trained and approved by manufacturer to inspect, demonstrate, repair, and perform service on installations of manufacturer's products that are similar in material, design, and extent to those indicated for this Project.

J. Preconstruction Testing: Where testing agency is indicated to perform preconstruction testing for compliance with specified requirements for performance and test methods, comply with the following:

1. Contractor responsibilities include the following:

   a. Provide test specimens representative of proposed products and construction.
   b. Submit specimens in a timely manner with sufficient time for testing and analyzing results to prevent delaying the Work.
   c. When testing is complete, remove test specimens and test assemblies,; do not reuse products on Project.

2. Testing Agency Responsibilities: Submit a certified written report of each test, inspection, and similar quality-assurance service to Architect, with copy to Contractor. Interpret tests and inspections and state in each report whether tested and inspected work complies with or deviates from the Contract Documents.

K. Mockups: Before installing portions of the Work requiring mockups, build mockups for each form of construction and finish required to comply with the following requirements, using materials indicated for the completed Work:

1. Build mockups of size indicated.
2. Build mockups in location indicated or, if not indicated, as directed by Architect.
3. Notify Architect **seven** days in advance of dates and times when mockups will be constructed.
4. Employ supervisory personnel who will oversee mockup construction. Employ workers that will be employed to perform same tasks during the construction at Project.
5. Demonstrate the proposed range of aesthetic effects and workmanship.
6. Obtain Architect's approval of mockups before starting corresponding work, fabrication, or construction.

   a. Allow **seven** days for initial review and each re-review of each mockup.

7. Promptly correct unsatisfactory conditions noted by Architect's preliminary review, to the satisfaction of the Architect, before completion of final mockup.
8. Approval of mockups by the Architect does not constitute approval of deviations from the Contract Documents contained in mockups unless Architect specifically approves such deviations in writing.
9. Maintain mockups during construction in an undisturbed condition as a standard for judging the completed Work.
10. Demolish and remove mockups when directed unless otherwise indicated.

L. Specialty Mockups: See Section 014339 "Mockups" for additional construction requirements for **integrated exterior mockups and room mockups**.

1.8 QUALITY CONTROL

A. Owner Responsibilities: Where quality-control services are indicated as Owner's responsibility, Owner will engage a qualified testing agency to perform these services.

1. Owner will furnish Contractor with names, addresses, and telephone numbers of testing agencies engaged and a description of types of testing and inspection they are engaged to perform.
2. Costs for retesting and reinspecting construction that replaces or is necessitated by Work that failed to comply with the Contract Documents will be charged to Contractor**, and the Contract Sum will be adjusted by Change Order**.

B. Contractor Responsibilities: Tests and inspections not explicitly assigned to Owner are Contractor's responsibility. Perform additional quality-control activities, whether specified or not, to verify and document that the Work complies with requirements.

1. Engage a qualified testing agency to perform quality-control services.

    a. Contractor will not employ same entity engaged by Owner, unless agreed to in writing by Owner.

2. Notify testing agencies at least **24** hours in advance of time when Work that requires testing or inspection will be performed.
3. Where quality-control services are indicated as Contractor's responsibility, submit a certified written report, in duplicate, of each quality-control service.
4. Testing and inspection requested by Contractor and not required by the Contract Documents are Contractor's responsibility.
5. Submit additional copies of each written report directly to authorities having jurisdiction, when they so direct.

C. Retesting/Reinspecting: Regardless of whether original tests or inspections were Contractor's responsibility, provide quality-control services, including retesting and reinspecting, for construction that replaced Work that failed to comply with the Contract Documents.

D. Testing Agency Responsibilities: Cooperate with Architect and Contractor in performance of duties. Provide qualified personnel to perform required tests and inspections.

1. Notify Architect and Contractor promptly of irregularities or deficiencies observed in the Work during performance of its services.
2. Determine the locations from which test samples will be taken and in which in-situ tests are conducted.
3. Conduct and interpret tests and inspections and state in each report whether tested and inspected Work complies with or deviates from requirements.
4. Submit a certified written report, in duplicate, of each test, inspection, and similar quality-control service through Contractor.
5. Do not release, revoke, alter, or increase the Contract Document requirements or approve or accept any portion of the Work.
6. Do not perform duties of Contractor.

E. Manufacturer's Field Services: Where indicated, engage a factory-authorized service representative to inspect field-assembled components and equipment installation, including service connections. Report results in writing as specified in Section 013300 "Submittal Procedures."

F. Manufacturer's Technical Services: Where indicated, engage a manufacturer's technical representative to observe and inspect the Work. Manufacturer's technical representative's services include participation in preinstallation conferences, examination of substrates and conditions, verification of materials, observation of Installer activities, inspection of completed portions of the Work, and submittal of written reports.

G. Contractor's Associated Requirements and Services: Cooperate with agencies and representatives performing required tests, inspections, and similar quality-control services, and provide reasonable auxiliary services as requested. Notify agency sufficiently in advance of operations to permit assignment of personnel. Provide the following:

1. Access to the Work.
2. Incidental labor and facilities necessary to facilitate tests and inspections.

3. Adequate quantities of representative samples of materials that require testing and inspection. Assist agency in obtaining samples.
4. Facilities for storage and field curing of test samples.
5. Preliminary design mix proposed for use for material mixes that require control by testing agency.
6. Security and protection for samples and for testing and inspection equipment at Project site.

H. Coordination: Coordinate sequence of activities to accommodate required quality-assurance and quality-control services with a minimum of delay and to avoid necessity of removing and replacing construction to accommodate testing and inspection.

1. Schedule times for tests, inspections, obtaining samples, and similar activities.

1.9 SPECIAL TESTS AND INSPECTIONS

A. Special Tests and Inspections: Owner will engage a qualified **testing agency** and **special inspector** to conduct special tests and inspections required by authorities having jurisdiction as the responsibility of Owner[**, as indicated in the Statement of Special Inspections attached to this Section**], andas follows:

1. Verifying that manufacturer maintains detailed fabrication and quality-control procedures and reviewing the completeness and adequacy of those procedures to perform the Work.
2. Notifying Architect and Contractor promptly of irregularities and deficiencies observed in the Work during performance of its services.
3. Submitting a certified written report of each test, inspection, and similar quality-control service to Architect with copy to Contractor and to authorities having jurisdiction.
4. Submitting a final report of special tests and inspections at Substantial Completion, which includes a list of unresolved deficiencies.
5. Interpreting tests and inspections and stating in each report whether tested and inspected work complies with or deviates from the Contract Documents.
6. Retesting and reinspecting corrected Work.

PART 2 - PRODUCTS (Not Used)

PART 3 - EXECUTION

3.1 TEST AND INSPECTION LOG

A. Test and Inspection Log: Prepare a record of tests and inspections. Include the following:

1. Date test or inspection was conducted.
2. Description of the Work tested or inspected.
3. Date test or inspection results were transmitted to Architect.
4. Identification of testing agency or special inspector conducting test or inspection.

B. Maintain log at Project site. Post changes and revisions as they occur. Provide access to test and inspection log for Architect's **and authorities' having jurisdiction** reference during normal working hours.

1. Submit log at Project closeout as part of Project Record Documents.

3.2 REPAIR AND PROTECTION

A. General: On completion of testing, inspection, sample taking, and similar services, repair damaged construction and restore substrates and finishes.

1. Provide materials and comply with installation requirements specified in other Specification Sections or matching existing substrates and finishes. Restore patched areas and extend restoration into adjoining areas with durable seams that are as invisible as possible. Comply with the Contract Document requirements for cutting and patching in Section 017300 "Execution."

B. Protect construction exposed by or for quality-control service activities.

C. Repair and protection are Contractor's responsibility, regardless of the assignment of responsibility for quality-control services.

END OF SECTION 014000i

SECTION 014200 - REFERENCES

PART 1 - GENERAL

1.1 DEFINITIONS

A. General: Basic Contract definitions are included in the Conditions of the Contract.

B. "Accepted": When used to convey Architect's action on Contractor's submittals, applications, and requests, "accepted" is limited to Architect's duties and responsibilities as stated in the Conditions of the Contract.

C. "Directed": A command or instruction by Architect. Other terms including "requested," "authorized," "selected," "required," and "permitted" have the same meaning as "directed."

D. "Indicated": Requirements expressed by graphic representations or in written form on Drawings, in Specifications, and in other Contract Documents. Other terms including "shown," "noted," "scheduled," and "specified" have the same meaning as "indicated."

E. "Regulations": Laws, ordinances, statutes, and lawful orders issued by authorities having jurisdiction, and rules, conventions, and agreements within the construction industry that control performance of the Work.

F. "Furnish": Supply and deliver to Project site, ready for unloading, unpacking, assembly, installation, and similar operations.

G. "Install": Unload, temporarily store, unpack, assemble, erect, place, anchor, apply, work to dimension, finish, cure, protect, clean, and similar operations at Project site.

H. "Provide": Furnish and install, complete and ready for the intended use.

I. "Project Site": Space available for performing construction activities. The extent of Project site is shown on Drawings and may or may not be identical with the description of the land on which Project is to be built.

J. " Designer-Builder, Architect, General Contractor" For purposes of this project, these terms collectively and individually refer to the Design Build Team.

1.2 INDUSTRY STANDARDS

A. Applicability of Standards: Unless the Contract Documents include more stringent requirements, applicable construction industry standards have the same force and effect as if bound or copied directly into the Contract Documents to the extent referenced. Such standards are made a part of the Contract Documents by reference.

B. Publication Dates: Comply with standards in effect as of date of the Contract Documents unless otherwise indicated.

C. Copies of Standards: Each entity engaged in construction on Project should be familiar with industry standards applicable to its construction activity. Copies of applicable standards are not bound with the Contract Documents.

1. Where copies of standards are needed to perform a required construction activity, obtain copies directly from publication source.

1.3 ABBREVIATIONS AND ACRONYMS

A. Project Specific and Industry Organizations: Where abbreviations and acronyms are used in Specifications or other Contract Documents, they shall mean the recognized name of the entities indicated in Gale's "Encyclopedia of Associations: National Organizations of the U.S." or in Columbia Books' "National Trade & Professional Associations of the United States."

B. 1. BDS– Bay District Schools.

C. Industry Organizations: Where abbreviations and acronyms are used in Specifications or other Contract Documents, they shall mean the recognized name of the entities in the following list.

1. AABC - Associated Air Balance Council; www.aabc.com.
2. AAMA - American Architectural Manufacturers Association; www.aamanet.org.
3. AAPFCO - Association of American Plant Food Control Officials; www.aapfco.org.
4. AASHTO - American Association of State Highway and Transportation Officials; www.transportation.org.
5. AATCC - American Association of Textile Chemists and Colorists; www.aatcc.org.
6. ABMA - American Bearing Manufacturers Association; www.americanbearings.org.
7. ACI - American Concrete Institute; (Formerly: ACI International); www.concrete.org.
8. ACPA - American Concrete Pipe Association; www.concrete-pipe.org.
9. AEIC - Association of Edison Illuminating Companies, Inc. (The); www.aeic.org.
10. AF&PA - American Forest & Paper Association; www.afandpa.org.
11. AGA - American Gas Association; www.aga.org.
12. AHAM - Association of Home Appliance Manufacturers; www.aham.org.
13. AHRI - Air-Conditioning, Heating, and Refrigeration Institute (The); www.ahrinet.org.
14. AI - Asphalt Institute; www.asphaltinstitute.org.
15. AIA - American Institute of Architects (The); www.aia.org.
16. AISC - American Institute of Steel Construction; www.aisc.org.
17. AISI - American Iron and Steel Institute; www.steel.org.
18. AITC - American Institute of Timber Construction; www.aitc-glulam.org.
19. AMCA - Air Movement and Control Association International, Inc.; www.amca.org.
20. ANSI - American National Standards Institute; www.ansi.org.
21. AOSA - Association of Official Seed Analysts, Inc.; www.aosaseed.com.
22. APA - APA - The Engineered Wood Association; www.apawood.org.
23. APA - Architectural Precast Association; www.archprecast.org.
24. API - American Petroleum Institute; www.api.org.
25. ARI - Air-Conditioning & Refrigeration Institute; (See AHRI).
26. ARI - American Refrigeration Institute; (See AHRI).
27. ARMA - Asphalt Roofing Manufacturers Association; www.asphaltroofing.org.
28. ASCE - American Society of Civil Engineers; www.asce.org.
29. ASCE/SEI - American Society of Civil Engineers/Structural Engineering Institute; (See ASCE).
30. ASHRAE - American Society of Heating, Refrigerating and Air-Conditioning Engineers; www.ashrae.org.
31. ASME - ASME International; (American Society of Mechanical Engineers); www.asme.org.
32. ASSE - American Society of Safety Engineers (The); www.asse.org.
33. ASSE - American Society of Sanitary Engineering; www.asse-plumbing.org.
34. ASTM - ASTM International; (American Society for Testing and Materials International); www.astm.org.
35. ATIS - Alliance for Telecommunications Industry Solutions; www.atis.org.
36. AWEA - American Wind Energy Association; www.awea.org.
37. AWI - Architectural Woodwork Institute; www.awinet.org.

38. AWMAC - Architectural Woodwork Manufacturers Association of Canada; www.awmac.com.
39. AWPA - American Wood Protection Association; (Formerly: American Wood-Preservers' Association); www.awpa.com.
40. AWS - American Welding Society; www.aws.org.
41. AWWA - American Water Works Association; www.awwa.org.
42. BHMA - Builders Hardware Manufacturers Association; www.buildershardware.com.
43. BIA - Brick Industry Association (The); www.gobrick.com.
44. BICSI - BICSI, Inc.; www.bicsi.org.
45. BIFMA - BIFMA International; (Business and Institutional Furniture Manufacturer's Association); www.bifma.com.
46. BISSC - Baking Industry Sanitation Standards Committee; www.bissc.org.
47. BWF - Badminton World Federation; (Formerly: International Badminton Federation); www.bwfbadminton.org.
48. CDA - Copper Development Association; www.copper.org.
49. CEA - Canadian Electricity Association; www.electricity.ca.
50. CEA - Consumer Electronics Association; www.ce.org.
51. CFFA - Chemical Fabrics & Film Association, Inc.; www.chemicalfabricsandfilm.com.
52. CFSEI - Cold-Formed Steel Engineers Institute; www.cfsei.org.
53. CGA - Compressed Gas Association; www.cganet.com.
54. CIMA - Cellulose Insulation Manufacturers Association; www.cellulose.org.
55. CISCA - Ceilings & Interior Systems Construction Association; www.cisca.org.
56. CISPI - Cast Iron Soil Pipe Institute; www.cispi.org.
57. CLFMI - Chain Link Fence Manufacturers Institute; www.chainlinkinfo.org.
58. CPA - Composite Panel Association; www.pbmdf.com.
59. CRI - Carpet and Rug Institute (The); www.carpet-rug.org.
60. CRRC - Cool Roof Rating Council; www.coolroofs.org.
61. CRSI - Concrete Reinforcing Steel Institute; www.crsi.org.
62. CSA - Canadian Standards Association; www.csa.ca.
63. CSA - CSA International; (Formerly: IAS - International Approval Services); www.csa-international.org.
64. CSI - Construction Specifications Institute (The); www.csinet.org.
65. CSSB - Cedar Shake & Shingle Bureau; www.cedarbureau.org.
66. CTI - Cooling Technology Institute; (Formerly: Cooling Tower Institute); www.cti.org.
67. CWC - Composite Wood Council; (See CPA).
68. DASMA - Door and Access Systems Manufacturers Association; www.dasma.com.
69. DHI - Door and Hardware Institute; www.dhi.org.
70. ECA - Electronic Components Association; (See ECIA).
71. ECAMA - Electronic Components Assemblies & Materials Association; (See ECIA).
72. ECIA ? Electronic Components Industry Association; www.eciaonline.org.
73. EIA - Electronic Industries Alliance; (See TIA).
74. EIMA - EIFS Industry Members Association; www.eima.com.
75. EJMA - Expansion Joint Manufacturers Association, Inc.; www.ejma.org.
76. ESD - ESD Association; (Electrostatic Discharge Association); www.esda.org.
77. ESTA - Entertainment Services and Technology Association; (See PLASA).
78. EVO - Efficiency Valuation Organization; www.evo-world.org.
79. FIBA - Federation Internationale de Basketball; (The International Basketball Federation); www.fiba.com.
80. FIVB - F?d?ration Internationale de Volleyball; (The International Volleyball Federation); www.fivb.org.
81. FM Approvals - FM Approvals LLC; www.fmglobal.com.
82. FM Global - FM Global; (Formerly: FMG - FM Global); www.fmglobal.com.
83. FRSA - Florida Roofing, Sheet Metal & Air Conditioning Contractors Association, Inc.; www.floridaroof.com.
84. FSA - Fluid Sealing Association; www.fluidsealing.com.
85. FSC - Forest Stewardship Council U.S.; www.fscus.org.
86. GA - Gypsum Association; www.gypsum.org.

87. GANA - Glass Association of North America; www.glasswebsite.com.
88. GS - Green Seal; www.greenseal.org.
89. HI - Hydraulic Institute; www.pumps.org.
90. HI/GAMA - Hydronics Institute/Gas Appliance Manufacturers Association; (See AHRI).
91. HMMA - Hollow Metal Manufacturers Association; (See NAAMM).
92. HPVA - Hardwood Plywood & Veneer Association; www.hpva.org.
93. HPW - H. P. White Laboratory, Inc.; www.hpwhite.com.
94. IAPSC - International Association of Professional Security Consultants; www.iapsc.org.
95. IAS - International Accreditation Service; www.iasonline.org.
96. IAS - International Approval Services; (See CSA).
97. ICBO - International Conference of Building Officials; (See ICC).
98. ICC - International Code Council; www.iccsafe.org.
99. ICEA - Insulated Cable Engineers Association, Inc.; www.icea.net.
100. ICPA - International Cast Polymer Alliance; www.icpa-hq.org.
101. ICRI - International Concrete Repair Institute, Inc.; www.icri.org.
102. IEC - International Electrotechnical Commission; www.iec.ch.
103. IEEE - Institute of Electrical and Electronics Engineers, Inc. (The); www.ieee.org.
104. IES - Illuminating Engineering Society; (Formerly: Illuminating Engineering Society of North America); www.ies.org.
105. IESNA - Illuminating Engineering Society of North America; (See IES).
106. IEST - Institute of Environmental Sciences and Technology; www.iest.org.
107. IGMA - Insulating Glass Manufacturers Alliance; www.igmaonline.org.
108. IGSHPA - International Ground Source Heat Pump Association; www.igshpa.okstate.edu.
109. ILI - Indiana Limestone Institute of America, Inc.; www.iliai.com.
110. Intertek - Intertek Group; (Formerly: ETL SEMCO; Intertek Testing Service NA); www.intertek.com.
111. ISA - International Society of Automation (The); (Formerly: Instrumentation, Systems, and Automation Society); www.isa.org.
112. ISAS - Instrumentation, Systems, and Automation Society (The); (See ISA).
113. ISFA - International Surface Fabricators Association; (Formerly: International Solid Surface Fabricators Association); www.isfanow.org.
114. ISO - International Organization for Standardization; www.iso.org.
115. ISSFA - International Solid Surface Fabricators Association; (See ISFA).
116. ITU - International Telecommunication Union; www.itu.int/home.
117. KCMA - Kitchen Cabinet Manufacturers Association; www.kcma.org.
118. LMA - Laminating Materials Association; (See CPA).
119. LPI - Lightning Protection Institute; www.lightning.org.
120. MBMA - Metal Building Manufacturers Association; www.mbma.com.
121. MCA - Metal Construction Association; www.metalconstruction.org.
122. MFMA - Maple Flooring Manufacturers Association, Inc.; www.maplefloor.org.
123. MFMA - Metal Framing Manufacturers Association, Inc.; www.metalframingmfg.org.
124. MHIA - Material Handling Industry of America; www.mhia.org.
125. MIA - Marble Institute of America; www.marble-institute.com.
126. MMPA - Moulding & Millwork Producers Association; (Formerly: Wood Moulding & Millwork Producers Association); www.wmmpa.com.
127. MPI - Master Painters Institute; www.paintinfo.com.
128. MSS - Manufacturers Standardization Society of The Valve and Fittings Industry Inc.; www.mss-hq.org.
129. NAAMM - National Association of Architectural Metal Manufacturers; www.naamm.org.
130. NACE - NACE International; (National Association of Corrosion Engineers International); www.nace.org.
131. NADCA - National Air Duct Cleaners Association; www.nadca.com.
132. NAIMA - North American Insulation Manufacturers Association; www.naima.org.
133. NBGQA - National Building Granite Quarries Association, Inc.; www.nbgqa.com.
134. NCAA - National Collegiate Athletic Association (The); www.ncaa.org.
135. NCMA - National Concrete Masonry Association; www.ncma.org.

136. NEBB - National Environmental Balancing Bureau; www.nebb.org.
137. NECA - National Electrical Contractors Association; www.necanet.org.
138. NeLMA - Northeastern Lumber Manufacturers Association; www.nelma.org.
139. NEMA - National Electrical Manufacturers Association; www.nema.org.
140. NETA - InterNational Electrical Testing Association; www.netaworld.org.
141. NFHS - National Federation of State High School Associations; www.nfhs.org.
142. NFPA - NFPA; (National Fire Protection Association); www.nfpa.org.
143. NFPA - NFPA International; (See NFPA).
144. NFRC - National Fenestration Rating Council; www.nfrc.org.
145. NHLA - National Hardwood Lumber Association; www.nhla.com.
146. NLGA - National Lumber Grades Authority; www.nlga.org.
147. NOFMA - National Oak Flooring Manufacturers Association; (See NWFA).
148. NOMMA - National Ornamental & Miscellaneous Metals Association; www.nomma.org.
149. NRCA - National Roofing Contractors Association; www.nrca.net.
150. NRMCA - National Ready Mixed Concrete Association; www.nrmca.org.
151. NSF - NSF International; (National Sanitation Foundation International); www.nsf.org.
152. NSPE - National Society of Professional Engineers; www.nspe.org.
153. NSSGA - National Stone, Sand & Gravel Association; www.nssga.org.
154. NTMA - National Terrazzo & Mosaic Association, Inc. (The); www.ntma.com.
155. NWFA - National Wood Flooring Association; www.nwfa.org.
156. PCI - Precast/Prestressed Concrete Institute; www.pci.org.
157. PDI - Plumbing & Drainage Institute; www.pdionline.org.
158. PLASA - PLASA; (Formerly: ESTA - Entertainment Services and Technology Association); www.plasa.org.
159. RCSC - Research Council on Structural Connections; www.boltcouncil.org.
160. RFCI - Resilient Floor Covering Institute; www.rfci.com.
161. RIS - Redwood Inspection Service; www.redwoodinspection.com.
162. SAE - SAE International; (Society of Automotive Engineers); www.sae.org.
163. SCTE - Society of Cable Telecommunications Engineers; www.scte.org.
164. SDI - Steel Deck Institute; www.sdi.org.
165. SDI - Steel Door Institute; www.steeldoor.org.
166. SEFA - Scientific Equipment and Furniture Association; www.sefalabs.com.
167. SEI/ASCE - Structural Engineering Institute/American Society of Civil Engineers; (See ASCE).
168. SIA - Security Industry Association; www.siaonline.org.
169. SJI - Steel Joist Institute; www.steeljoist.org.
170. SMA - Screen Manufacturers Association; www.smainfo.org.
171. SMACNA - Sheet Metal and Air Conditioning Contractors' National Association; www.smacna.org.
172. SMPTE - Society of Motion Picture and Television Engineers; www.smpte.org.
173. SPFA - Spray Polyurethane Foam Alliance; www.sprayfoam.org.
174. SPIB - Southern Pine Inspection Bureau; www.spib.org.
175. SPRI - Single Ply Roofing Industry; www.spri.org.
176. SRCC - Solar Rating and Certification Corporation; www.solar-rating.org.
177. SSINA - Specialty Steel Industry of North America; www.ssina.com.
178. SSPC - SSPC: The Society for Protective Coatings; www.sspc.org.
179. STI - Steel Tank Institute; www.steeltank.com.
180. SWI - Steel Window Institute; www.steelwindows.com.
181. SWPA - Submersible Wastewater Pump Association; www.swpa.org.
182. TCA - Tilt-Up Concrete Association; www.tilt-up.org.
183. TCNA - Tile Council of North America, Inc.; (Formerly: Tile Council of America); www.tileusa.com.
184. TEMA - Tubular Exchanger Manufacturers Association, Inc.; www.tema.org.
185. TIA - Telecommunications Industry Association; (Formerly: TIA/EIA - Telecommunications Industry Association/Electronic Industries Alliance); www.tiaonline.org.
186. TIA/EIA - Telecommunications Industry Association/Electronic Industries Alliance; (See TIA).
187. TMS - The Masonry Society; www.masonrysociety.org.

188. TPI - Truss Plate Institute; www.tpinst.org.
189. TPI - Turfgrass Producers International; www.turfgrasssod.org.
190. TRI - Tile Roofing Institute; (Formerly: National Tile Roofing Manufacturing Association); www.tileroofing.org.
191. UBC - Uniform Building Code; (See ICC).
192. UL - Underwriters Laboratories Inc.; www.ul.com.
193. UNI - Uni-Bell PVC Pipe Association; www.uni-bell.org.
194. USAV - USA Volleyball; www.usavolleyball.org.
195. USGBC - U.S. Green Building Council; www.usgbc.org.
196. USITT - United States Institute for Theatre Technology, Inc.; www.usitt.org.
197. WASTEC - Waste Equipment Technology Association; www.wastec.org.
198. WCLIB - West Coast Lumber Inspection Bureau; www.wclib.org.
199. WCMA - Window Covering Manufacturers Association; www.wcmanet.org.
200. WDMA - Window & Door Manufacturers Association; www.wdma.com.
201. WI - Woodwork Institute; (Formerly: WIC - Woodwork Institute of California); www.wicnet.org.
202. WMMPA - Wood Moulding & Millwork Producers Association; (See MMPA).
203. WSRCA - Western States Roofing Contractors Association; www.wsrca.com.
204. WPA - Western Wood Products Association; www.wwpa.org.

D. Code Agencies: Where abbreviations and acronyms are used in Specifications or other Contract Documents, they shall mean the recognized name of the entities in the following list.

1. DIN - Deutsches Institut f?r Normung e.V.; www.din.de.
2. IAPMO - International Association of Plumbing and Mechanical Officials; www.iapmo.org.
3. ICC - International Code Council; www.iccsafe.org.
4. ICC-ES - ICC Evaluation Service, LLC; www.icc-es.org.

E. Federal Government Agencies: Where abbreviations and acronyms are used in Specifications or other Contract Documents, they shall mean the recognized name of the entities in the following list.

1. COE - Army Corps of Engineers; www.usace.army.mil.
2. CPSC - Consumer Product Safety Commission; www.cpsc.gov.
3. DOC - Department of Commerce; National Institute of Standards and Technology; www.nist.gov.
4. DOD - Department of Defense; http://dodssp.daps.dla.mil.
5. DOE - Department of Energy; www.energy.gov.
6. EPA - Environmental Protection Agency; www.epa.gov.
7. FAA - Federal Aviation Administration; www.faa.gov.
8. FG - Federal Government Publications; www.gpo.gov.
9. GSA - General Services Administration; www.gsa.gov.
10. HUD - Department of Housing and Urban Development; www.hud.gov.
11. LBL - Lawrence Berkeley National Laboratory; Environmental Energy Technologies Division; http://eetd.lbl.gov.
12. OSHA - Occupational Safety & Health Administration; www.osha.gov.
13. SD - Department of State; www.state.gov.
14. TRB - Transportation Research Board; National Cooperative Highway Research Program; www.trb.org.
15. USDA - Department of Agriculture; Agriculture Research Service; U.S. Salinity Laboratory; www.ars.usda.gov.
16. USDA - Department of Agriculture; Rural Utilities Service; www.usda.gov.
17. USDJ - Department of Justice; Office of Justice Programs; National Institute of Justice; www.ojp.usdoj.gov.
18. USP - U.S. Pharmacopeia; www.usp.org.
19. USPS - United States Postal Service; www.usps.com.

F. Standards and Regulations: Where abbreviations and acronyms are used in Specifications or other Contract Documents, they shall mean the recognized name of the standards and regulations in the following list.

1. CFR - Code of Federal Regulations; Available from Government Printing Office; www.gpo.gov/fdsys.
2. DOD - Department of Defense; Military Specifications and Standards; Available from Department of Defense Single Stock Point; http://dodssp.daps.dla.mil.
3. DSCC - Defense Supply Center Columbus; (See FS).
4. FED-STD - Federal Standard; (See FS).
5. FS - Federal Specification; Available from Department of Defense Single Stock Point; http://dodssp.daps.dla.mil.
    a. Available from Defense Standardization Program; www.dsp.dla.mil.
    b. Available from General Services Administration; www.gsa.gov.
    c. Available from National Institute of Building Sciences/Whole Building Design Guide; www.wbdg.org/ccb.
6. MILSPEC - Military Specification and Standards; (See DOD).
7. USAB - United States Access Board; www.access-board.gov.
8. USATBCB - U.S. Architectural & Transportation Barriers Compliance Board; (See USAB).

G. State Government Agencies: Where abbreviations and acronyms are used in Specifications or other Contract Documents, they shall mean the recognized name of the entities in the following list.

1. CBHF; State of California; Department of Consumer Affairs; Bureau of Electronic Appliance and Repair, Home Furnishings and Thermal Insulation; www.bearhfti.ca.gov.
2. CCR; California Code of Regulations; Office of Administrative Law; California Title 24 Energy Code; www.calregs.com.
3. CDHS; California Department of Health Services; (See CDPH).
4. CDPH; California Department of Public Health; Indoor Air Quality Program; www.cal-iaq.org.
5. CPUC; California Public Utilities Commission; www.cpuc.ca.gov.
6. SCAQMD; South Coast Air Quality Management District; www.aqmd.gov.
7. TFS; Texas Forest Service; Forest Resource Development and Sustainable Forestry; http://txforestservice.tamu.edu.

PART 2 - PRODUCTS (Not Used)

PART 3 - EXECUTION (Not Used)

END OF SECTION 014200

THIS PAGE LEFT INTENTIONALLY BLANK

SECTION 01 43 30 - QUALITY ASSURANCE PROGRAM FOR FIRESTOPPING PENETRATIONS AND JOINTS

PART 1 - GENERAL

1.1 SUMMARY:

A. In compliance with the Florida Fire Prevention Code (F.F.P.C.) the Owner will employ a Special Inspector to prepare and monitor a Quality Assurance Program for the installation of firestop devices and fire-resistive systems installed to protect penetrations and joints.

B. Related work specified elsewhere:

1. Firestopping.

1.2 GENERAL:

A. The contract requirements for this project are contained in the Contract Documents. The following guidelines shall be used in conjunction with a careful study of the Contract Documents.

1. Review the Contract Documents and ensure that they are approved and available before the start of any phase of the firestopping work.

2. Review, with the Contractor, the construction procedure before the start of any phase of firestopping work an ensure that it accommodates the design.

3. Review, with the independent testing laboratory and Contractor, the requirements as to the type of inspection and testing that is necessary before start of any phase of the firestopping work. Establish a clear method for marking all tested and inspected items. Confirm that the Testing Agency is using qualified personnel and completing all tests and inspections in a timely and professional manner.

4. After delivery to the job, inspect firestopping materials for compliance with the Contract Documents and identify damage and flaws. Confirm that the firestopping materials are being protected and stored properly.

5. Verify that all tests, sampling or reports have been completed before finished work is covered and no longer capable of being inspected or tested.

1.3 RESPONSIBILITIES OF THE SPECIAL INSPECTOR:

A. The Special Inspector will be responsible to the enforcement agency (the Authority Having Jurisdiction (AHJ)) and will report their inspection results in accordance with the current governing Florida Fire Protection Code (F.F.P.C.).

B. A Special Inspector shall be one of the following:

1. A certified Code Official/Inspector, licensed Architect or engineer, licensed professional in the construction industry, certified representative of a quality assurance or an accredited testing laboratory.

2. A Special Inspector shall have a minimum two (2) years in construction field experience.

C. The Special Inspector shall present credentials to and be accepted by the AHJ. The Special Inspector will submit the proposed report format documents to the AHJ.

D. The Special Inspector shall be completely independent of the Installer, Contractor, Manufacturer or supplier of any material being inspected. The Special Inspector shall not be a competitor of the Installer, Contractor, Manufacturer, or supplier of any materials being inspected.

E. The Special Inspector is responsible for observing and verifying that the construction of the fire stop and fire-resistive joint systems comply with the Contract Documents. Contract Documents are defined as the permitted plans, addenda, supplemental instructions, the specifications with all amendments thereto, approved submittals, and this quality program.

F. The Special Inspector may use a representative to perform inspection work. The Special Inspector shall insure the authorized representative is qualified by education to perform the duties assigned by the Special Inspector and shall maintain responsible supervisory control over the representative pursuant to the AHJ. The Special Inspector shall be responsible for the work of the authorized representative, including reviewing reports and spot checks. The Special Inspector shall personally visit the project site at points during construction which he deems key to the Quality Assurance Program.

G. The Special Inspector or their authorized representative will visit the project site as required by the construction activity to inspect the elements during the progress of the work. Further, it is required that the Special Inspector visit the project on a regular periodic basis during construction of the of elements.

H. The Special Inspector will report inspections of materials, workmanship or other features of construction deviating from the requirements of the Contract Documents. Guidelines for inspections covering specific areas of' construction are listed herein. The Special Inspector shall complete inspection reports after each inspection, sign each report and forward them to the Architect of Record, with copies to the Engineer of Record, Owner and Contractor. Submit reports on a monthly basis.

I. The acceptance of a firestop or fire resistive component by the Special Inspector in no way relieves the Contractor of responsibility for complying with the requirements of the Contract Documents.

J. Neither the Special Inspector or their authorized representatives shall make design decisions or direct the Contractor to deviate from the approved Contract Documents. Deviations from the approved Contract Documents shall be brought to the attention of the Contractor in a timely manner, so as to avert undue expense. If the Contractor corrects, to the satisfaction of the Special Inspector, no further action is necessary. If the deviations are not corrected to the satisfaction of the Special Inspector, they shall be brought to the attention of the Registered Design Professional of record and the Owner.

K. The Special Inspector shall institute Quality Assurance procedures including, but not limited to, requiring scheduled and unscheduled visits, utilization of relevant check lists, use of an inspection report and insuring that the inspector or the authorized representative is at the project whenever so required by the Quality Assurance Program.

L. The Special Inspector will maintain a written record of Quality Assurance Program building inspection activities and will render signed reports promptly to the Owner with copies to the Architect of Record, the Engineer of Record and the Contractor. Individual reports may include any or all of the following:

1. General report on construction progress.
2. Weather conditions.
3. Other personnel present during the inspections.
4. Detailed check-off reports of deficiencies previously noted.
5. Reports of type corrections of deficiencies previously noted.
6. Special test reports, sketches or other supplemental data.

M. The Special Inspector shall provide inspection services and/or testing which is in accordance with the following:; Florida Fire Prevention Code - 6 th Edition; NFPA 1 Fire Code; Chapter 12 “Features of Fire Protection”; sections 12.3.2 Quality Assurance for Penetrations and Joints; 12.3.2.1 and 12.3.2.2.

N. The Special Inspector shall provide inspection services and testing per the following standards:

1. ASTM E814, Standard Test Method for Fire Tests of Through Penetration Fire Stops

2. Or ANSI/UL 1479, Standard for Fire Tests of Through Penetration Firestops.

3. ASTM E2174, Standard Practice for On-site Inspection of Installed Fire Stops.

4. ASTM E1966, Standard Test Method for Fire-resistive Joint Systems

5. Or ANSI/UL 2079, Standard Tests for Fire Resistance of Building Joint Systems.

6. ASTM E2393, Standard Practice for On-Site Inspection of Installed Fire Resistive Joint Systems and Perimeter Fire Barriers.

O. The Quality Assurance Program allows for general and specific items of concern, it does not limit the Special Inspector to only items listed. The Special Inspector's judgment shall prevail on items not specifically covered.

P. The Special Inspector shall provide a final closing document containing all previous reports, correspondence and information for the RDP to review for compliance of the original quality assurance program intent. Closing documents shall be signed and sealed by the RDP then submitted to the AHJ.

1.4 RESPONSIBILITIES OF THE CONTRACTOR:

A. The Contractor shall furnish the Special Inspector, and keep current, a schedule of Construction. The Contractor shall notify the Special Inspector 48 hours prior to the need for an inspection. The Contractor shall not cover work needing inspection prior to inspection by the Special Inspector. The Contractor shall make all areas available and safe for inspection.

B. The Contractor shall provide the Special Inspector a copy of each approved submittal related to firestop and fire resistive joint systems, materials and components for use in verifying proper construction. Such submittals shall include, but not be limited to, the following:

1. Contract documents, including all revisions.

2. Firestop and Joint shop drawings and product data.

C. All submittals provided to the Special Inspector shall bear the stamp and initials of the Contractor and the Architect or Engineer of Record.

PART 2 - PRODUCTS (Not Used)

PART 3 - EXECUTION (Not Used) End of Section

END OF SECTION 014330

SECTION 015000 - TEMPORARY FACILITIES AND CONTROLS

PART 1 - GENERAL

1.1 SUMMARY

A. Section includes requirements for temporary utilities, support facilities, and security and protection facilities.

B. Related Requirements:

1. Section 011000 "Summary" for work restrictions and limitations on utility interruptions.

1.2 USE CHARGES

A. Installation, removal, and use charges for temporary facilities shall be included in the Contract Sum unless otherwise indicated. Allow other entities engaged in the Project to use temporary services and facilities without cost, including, but not limited to, **Owner's construction forces,** Architect, testing agencies, and authorities having jurisdiction.

B. Water and Sewer Service Provide connections and extensions of services **and metering** required for construction operations.

C. Electric Power Service

D. Provide connections and extensions of services **and metering** as required for construction operations.

1.3 INFORMATIONAL SUBMITTALS

A. Site Utilization Plan: Show temporary facilities, temporary utility lines and connections, staging areas, construction site entrances, vehicle circulation, and parking areas for construction personnel.

B. Project Identification and Temporary Signs: Show fabrication and installation details, including plans, elevations, details, layouts, typestyles, graphic elements, and message content.

C. Fire-Safety Program: Show compliance with requirements of NFPA 241 and authorities having jurisdiction. Indicate Contractor personnel responsible for management of fire-prevention program.

D. Moisture- and Mold-Protection Plan: Describe procedures and controls for protecting materials and construction from water absorption and damage and mold. Describe delivery, handling, storage, installation, and protection provisions for materials subject to water absorption or water damage.

1. Indicate procedures for discarding water-damaged materials, protocols for mitigating water intrusion into completed Work, and requirements for replacing water-damaged Work.
2. Indicate sequencing of work that requires water, such as sprayed fire-resistive materials, plastering, and terrazzo grinding, and describe plans for dealing with water from these operations. Show procedures for verifying that wet construction has dried sufficiently to permit installation of finish materials.
3. Indicate methods to be used to avoid trapping water in finished work.

1.4 QUALITY ASSURANCE

A. Electric Service: Comply with NECA, NEMA, and UL standards and regulations for temporary electric service. Install service to comply with NFPA 70.

B. Tests and Inspections: Arrange for authorities having jurisdiction to test and inspect each temporary utility before use. Obtain required certifications and permits.

C. Accessible Temporary Egress: Comply with applicable provisions in **the United States Access Board's ADA-ABA Accessibility Guidelines and the** Florida Building Code as required.

1.5 PROJECT CONDITIONS

A. Temporary Use of Permanent Facilities: Engage Installer of each permanent service to assume responsibility for operation, maintenance, and protection of each permanent service during its use as a construction facility before Owner's acceptance, regardless of previously assigned responsibilities.

PART 2 - PRODUCTS

2.1 TEMPORARY FACILITIES

A. Field Offices: Prefabricated or mobile units with serviceable finishes, temperature controls, and foundations adequate for normal loading.

B. Common-Use Field Office: Of sufficient size to accommodate needs of Owner, Architect, Contractor, and construction personnel office activities and to accommodate Project meetings specified in other Division 01 Sections. Keep office clean and orderly. Furnish and equip offices as follows:

1. Furniture required for Project-site documents including file cabinets, plan tables, plan racks, and bookcases.
2. Conference room of sufficient size to accommodate meetings Provide electrical power service and 120-V ac duplex receptacles, with no fewer than one receptacle on each wall. Furnish room with conference table, chairs, and 4-foot- (1.2-m-) square tack and marker boards.
3. Drinking water and private toilet.
4. Heating and cooling equipment necessary to maintain a uniform indoor temperature of 68 to 72 deg F (20 to 22 deg C).
5. Lighting fixtures capable of maintaining average illumination of 20 fc (215 lx) at desk height.

2.2 EQUIPMENT

A. Fire Extinguishers: Portable, UL rated; with class and extinguishing agent as required by locations and classes of fire exposures.

PART 3 - EXECUTION

3.1 TEMPORARY FACILITIES, GENERAL

A. Conservation: Coordinate construction and use of temporary facilities with consideration given to conservation of energy, water, and materials. Coordinate use of temporary utilities to minimize waste.

1. Salvage materials and equipment involved in performance of, but not actually incorporated into, the Work.

3.2 INSTALLATION, GENERAL

A. Locate facilities where they will serve Project adequately and result in minimum interference with performance of the Work. Relocate and modify facilities as required by progress of the Work.

B. Provide each facility ready for use when needed to avoid delay. Do not remove until facilities are no longer needed or are replaced by authorized use of completed permanent facilities.

C. Isolation of Work Areas in Occupied Facilities: Prevent dust, fumes, and odors from entering occupied areas.

3.3 TEMPORARY UTILITY INSTALLATION

A. General: Install temporary service or connect to existing service.

1. Arrange with utility company, Owner, and existing users for time when service can be interrupted, if necessary, to make connections for temporary services.

B. Sewers and Drainage: Provide temporary utilities to remove effluent lawfully.

1. Connect temporary sewers toas directed by authorities having jurisdiction.

C. Water Service: Install water service and distribution piping in sizes and pressures adequate for construction.

D. Sanitary Facilities: Provide temporary toilets, wash facilities, safety shower and eyewash facilities, and drinking water for use of construction personnel. Comply with requirements of authorities having jurisdiction for type, number, location, operation, and maintenance of fixtures and facilities.

E. Temporary Heating and Cooling: Provide temporary heating and cooling required by construction activities for curing or drying of completed installations or for protecting installed construction from adverse effects of low temperatures or high humidity. Select equipment that will not have a harmful effect on completed installations or elements being installed.

1. Provide temporary dehumidification systems when required to reduce ambient and substrate moisture levels to level required to allow installation or application of finishes and their proper curing or drying.

F. Electric Power Service: Provide electric power service and distribution system of sufficient size, capacity, and power characteristics required for construction operations.

1. Install electric power service as indicated.

G. Lighting: Provide temporary lighting with local switching that provides adequate illumination for construction operations, observations, inspections, and traffic conditions.

1. Install and operate temporary lighting that fulfills security and protection requirements without operating entire system.

H. Electronic Communication Service: Provide secure WiFi wireless connection to internet with provisions for access by Architect and Owner.

1. Internet Service: Broadband modem, router, and ISP, equipped with hardware firewall, providing minimum **10.0** Mbps upload and **15** -Mbps download speeds at each computer.
2. Internet Security: Integrated software, providing software firewall, virus, spyware, phishing, and spam protection in a combined application.

3.4 SUPPORT FACILITIES INSTALLATION

A. Comply with the following:

1. Provide construction for temporary field offices, shops, and sheds located within construction area or within 30 feet (9 m) of building lines that is noncombustible according to ASTM E136. Comply with NFPA 241.

B. Temporary Roads and Paved Areas: Construct and maintain temporary roads and paved areas adequate for construction operations. Locate temporary roads and paved areas **within construction limits indicated** on Drawings.

1. Provide dust-control treatment that is nonpolluting and non-tracking. Reapply treatment as required to minimize dust.

C. Traffic Controls: Comply with requirements of authorities having jurisdiction.

1. Protect existing site improvements to remain including curbs, pavement, and utilities.
2. Maintain access for fire-fighting equipment and access to fire hydrants.

D. Parking: parking areas for construction personnel.

E. Storage and Staging: **Use designated areas of Project site** for storage and staging needs.

F. Dewatering Facilities and Drains: Comply with requirements of authorities having jurisdiction. Maintain Project site, excavations, and construction free of water.

1. Dispose of rainwater in a lawful manner that will not result in flooding Project or adjoining properties or endanger permanent Work or temporary facilities.

G. Project Signs: Provide Project signs as indicated. Unauthorized signs are not permitted.

1. Identification Signs: Provide Project identification signs as indicated on Drawings.
2. Temporary Signs: Provide other signs as indicated and as required to inform public and individuals seeking entrance to Project.

a. Provide temporary, directional signs for construction personnel and visitors.

3. Maintain and touch up signs so they are legible at all times.

H. Waste Disposal Facilities: Provide waste-collection containers in sizes adequate to handle waste from construction operations. Comply with requirements of authorities having jurisdiction. Comply with progress cleaning requirements in Section 017300 "Execution."

I. Lifts and Hoists: Provide facilities necessary for hoisting materials and personnel.

1. Truck cranes and similar devices used for hoisting materials are considered "tools and equipment" and not temporary facilities.

J. Temporary Elevator Use: **Use of elevators is not permitted**.

K. Temporary Stairs: Until permanent stairs are available, provide temporary stairs where ladders are not adequate.

L. Temporary Use of Permanent Stairs: Use of new stairs for construction traffic will be permitted, provided stairs are protected and finishes restored to new condition at time of Substantial Completion.

3.5 SECURITY AND PROTECTION FACILITIES INSTALLATION

A. Protection of Existing Facilities: Protect existing vegetation, equipment, structures, utilities, and other improvements at Project site and on adjacent properties, except those indicated to be removed or altered. Repair damage to existing facilities.

1. Where access to adjacent properties is required in order to affect protection of existing facilities, obtain written permission from adjacent property owner to access property for that purpose.

B. Environmental Protection: Provide protection, operate temporary facilities, and conduct construction as required to comply with environmental regulations and that minimize possible air, waterway, and subsoil contamination or pollution or other undesirable effects.

C. Temporary Erosion and Sedimentation Control: Comply with[**requirements of EPA Construction General Permit or authorities having jurisdiction, whichever is more stringent.**

D. Temporary Erosion and Sedimentation Control: Provide measures to prevent soil erosion and discharge of soil-bearing water runoff and airborne dust to undisturbed areas and to adjacent properties and walkways, according to **erosion- and sedimentation-control Drawings or authorities having jurisdiction, whichever is more stringent**.

1. Verify that flows of water redirected from construction areas or generated by construction activity do not enter or cross tree- or plant-protection zones.
2. Inspect, repair, and maintain erosion- and sedimentation-control measures during construction until permanent vegetation has been established.
3. Clean, repair, and restore adjoining properties and roads affected by erosion and sedimentation from Project site during the course of Project.
4. Remove erosion and sedimentation controls and restore and stabilize areas disturbed during removal.

E. Stormwater Control: Comply with requirements of authorities having jurisdiction. Provide barriers in and around excavations and subgrade construction to prevent flooding by runoff of stormwater from heavy rains.

F. Tree and Plant Protection: Install temporary fencing located as indicated or outside the drip line of trees to protect vegetation from damage from construction operations. Protect tree root systems from damage, flooding, and erosion.

G. Site Enclosure Fence: **Before construction operations begin**, furnish and install site enclosure fence in a manner that will prevent people from easily entering site except by entrance gates.

1. Extent of Fence: **As required to enclose entire Project site or portion determined sufficient to accommodate construction operations**.

H. Security Enclosure and Lockup: Install temporary enclosure around partially completed areas of construction. Provide lockable entrances to prevent unauthorized entrance, vandalism, theft, and similar violations of security. Lock entrances at end of each workday.

I. Barricades, Warning Signs, and Lights: Comply with requirements of authorities having jurisdiction for erecting structurally adequate barricades, including warning signs and lighting.

J. Temporary Egress: Provide temporary egress from existing occupied facilities as indicated and as required by authorities having jurisdiction. Provide signage directing occupants to temporary egress.

K. Temporary Enclosures: Provide temporary enclosures for protection of construction, in progress and completed, from exposure, foul weather, other construction operations, and similar activities. Provide temporary weathertight enclosure for building exterior.

1. Where heating or cooling is needed and permanent enclosure is incomplete, insulate temporary enclosures.

L. Temporary Partitions: Provide floor-to-ceiling dustproof partitions to limit dust and dirt migration and to separate finished areas from fumes and noise.

1. Construct dustproof partitions with gypsum wallboard with joints taped on occupied side, and fire-retardant-treated plywood on construction operations side.
2. Where fire-resistance-rated temporary partitions are indicated or are required by authorities having jurisdiction, construct partitions according to the rated assemblies.
3. Provide walk-off mats at each entrance through temporary partition.

M. Temporary Fire Protection: Install and maintain temporary fire-protection facilities of types needed to protect against reasonably predictable and controllable fire losses. Comply with NFPA 241; manage fire-prevention program.

1. Prohibit smoking in construction areas. Comply with additional limits on smoking specified in other Sections.
2. Supervise welding operations, combustion-type temporary heating units, and similar sources of fire ignition according to requirements of authorities having jurisdiction.
3. Develop and supervise an overall fire-prevention and -protection program for personnel at Project site.
4. Comply with the requirements of the Florida Building

3.6 MOISTURE AND MOLD CONTROL

A. Moisture and Mold Protection: Protect stored materials and installed Work in accordance with Moisture and Mold Protection Plan.

B. Exposed Construction Period: Before installation of weather barriers, when materials are subject to wetting and exposure and to airborne mold spores, protect as follows:

1. Protect porous materials from water damage.
2. Protect stored and installed material from flowing or standing water.
3. Keep porous and organic materials from coming into prolonged contact with concrete.
4. Remove standing water from decks.
5. Keep deck openings covered or dammed.

C. Partially Enclosed Construction Period: After installation of weather barriers but before full enclosure and conditioning of building, when installed materials are still subject to infiltration of moisture and ambient mold spores, protect as follows:

1. Do not load or install drywall or other porous materials or components, or items with high organic content, into partially enclosed building.

2. Keep interior spaces reasonably clean and protected from water damage.
3. Periodically collect and remove waste containing cellulose or other organic matter.
4. Discard or replace water-damaged material.
5. Do not install material that is wet.
6. Discard and replace stored or installed material that begins to grow mold.
7. Perform work in a sequence that allows wet materials adequate time to dry before enclosing the material in gypsum board or other interior finishes.

D. Controlled Construction Period: After completing and sealing of the building enclosure but prior to the full operation of permanent HVAC systems, maintain as follows:

1. Control moisture and humidity inside building by maintaining effective dry-in conditions.
2. Use temporary or permanent HVAC system to control humidity within ranges specified for installed and stored materials.
3. Comply with manufacturer's written instructions for temperature, relative humidity, and exposure to water limits.

3.7 OPERATION, TERMINATION, AND REMOVAL

A. Maintenance: Maintain facilities in good operating condition until removal.

1. Maintain operation of temporary enclosures, heating, cooling, humidity control, ventilation, and similar facilities on a 24-hour basis where required to achieve indicated results and to avoid possibility of damage.

B. Temporary Facility Changeover: Do not change over from using temporary security and protection facilities to permanent facilities until Substantial Completion.

C. Termination and Removal: Remove each temporary facility when need for its service has ended, when it has been replaced by authorized use of a permanent facility, or no later than Substantial Completion. Complete or, if necessary, restore permanent construction that may have been delayed because of interference with temporary facility. Repair damaged Work, clean exposed surfaces, and replace construction that cannot be satisfactorily repaired.

1. Materials and facilities that constitute temporary facilities are property of Contractor. Owner reserves right to take possession of Project identification signs.
2. At Substantial Completion, repair, renovate, and clean permanent facilities used during construction period. Comply with final cleaning requirements specified in Section 017700 "Closeout Procedures."

END OF SECTION 015000

THIS PAGE LEFT INTENTIONALLY BLANK

SECTION 015500 - MATERIALS AND EQUIPMENT

PART 1 - GENERAL

1.01 DEFINITIONS

A. Definitions used in this Article are not intended to change the meaning of other terms used in the Contract Documents, such as "specialties," "systems," "structure," "finishes," "accessories," and similar terms. Such terms are self-explanatory and have well-recognized meanings in the construction industry.

B. "Products" are items purchased for incorporation in the Work, whether purchased for the Project or taken from previously purchased stock. The term "product" includes the terms "material," "equipment," "system," and terms of similar intent.

C. "Named Products" are items identified by the manufacturer's product name, including make or model number or other designation, shown or listed in the manufacturer's published product literature that is current as of the date of the Contract Documents.

D. "Materials" are products substantially shaped, cut, worked, mixed, finished, refined or otherwise fabricated, processed, or installed to form a part of the Work.

E. "Equipment" is a product with operational parts, whether motorized or manually operated, that requires service connections, such as wiring or piping.

1.02 QUALITY ASSURANCE

A. Source Limitations: To the fullest extent possible, provide products of the same kind from a single source.

B. Compatibility of Options: When the Contractor is given the option of selecting between two or more products for use on the Project, the product selected shall be compatible with products previously selected, even if previously selected products were also options.

C. Nameplates: Except for required labels and operating data, do not attach or imprint manufacturers or producer's nameplates or trademarks on exposed surfaces of products that will be exposed to view in occupied spaces or on the exterior.

D. Labels: Locate required product labels and stamps on concealed surfaces or, where required for observation after installation, on accessible surfaces that are not conspicuous.

E. Equipment Nameplates: Provide a permanent nameplate on each item of service-connected or power-operated equipment. Locate on an easily accessible surface that is inconspicuous in occupied spaces. The nameplate shall contain the following information and other essential operating data:

Name of product and manufacturer.
Model and serial number.
Capacity.
Speed.

~~Ratings~~.

F. Field marking for electrical, mechanical, plumbing and telecom locations:

1. All above ceiling electrical, mechanical, and plumbing shall have below ceiling labeling provided for some specific items IFF located above ceiling.
    a. Electrical – any electrically powered motor or device other than junction boxes located in a concealed location above ceiling shall be labeled below ceiling. See labeling requirements in a separate section "Labeling".
    b. HVAC – HVAC equipment located above ceiling including but not limited to VAV, VRF, AHU, EF units, and valves shall be baled below ceiling so as to make them easily locatable from below ceiling. Identification should match plan call outs for the items such that plans may be utilized in conjunction with labeling to locate and maintain each item.
    c. Plumbing – all valves located above ceiling shall be labeled below ceiling. Above ceiling valve shall be marked with permanently affixed TAG indicating what areas or items are served by the valve.
    d. Telecomm – see above ceiling labeling requirements per specification section on telecomm devices. Any signal repeaters, or other data / telecomm equipment located above ceiling shall be labeled on the ceiling below for easy identification in the future.

2. Labels shall be 1" x 4" in size and permanently attached to underside of drywall or permanently affixed to the acoustic ceiling grid within 2 feet of the above ceiling item being labeled.

3. Labels shall be hard plastic.

4. Lettering shall be minimum 12 font engraved into labels.

5. Color coding of labels shall be as follows:
    a. Red = electrical & Fire
    b. Yellow = gas
    c. Blue = water & sewer
    d. Green = HVAC
    e. Orange – telecomm
    f. Other colors as mutually agreed by owner and architect to be added

1.03 PRODUCT DELIVERY, STORAGE, AND HANDLING

A. Deliver, store, and handle products according to the manufacturer's recommendations, using means and methods that will prevent damage, deterioration, and loss, including theft.

B. Coordinate delivery with installation time to assure minimum holding time for items that are flammable, hazardous, easily damaged, or sensitive to deterioration, theft, and other losses; and to prevent overcrowding of construction spaces.

C. Deliver products to the site in undamaged condition in the manufacturer's original sealed container or other packaging system, complete with labels and instructions for handling, storing, unpacking, protecting, and installing.

D. Inspect products upon delivery to ensure compliance with the Contract Documents and to ensure that products are undamaged and properly protected.

E. Store products at the site in a manner that will facilitate inspection and measurement of quantity or counting of units.

F. All new installed materials shall be sealed from moisture penetration at the end of each day.

PART 2 - PRODUCTS

2.01 PRODUCT SELECTION

A. General Product Requirements: Provide products that comply with the Contract Documents, that are undamaged and, unless otherwise indicated, new at the time of installation. Discontinued items will not be accepted.

1. Provide products complete with accessories, trim, finish, safety guards, and other devices and details needed for a complete installation and the intended use and effect.

2. Standard Products: Where available, provide standard products of types that have been produced and used successfully in similar situations on other projects.

B. Product Selection Procedures: The Contract Documents and governing regulations govern product selection. Procedures governing product selection include the following:

1. Semi proprietary Specification Requirements: Where Specifications name two or more products or manufacturers, provide one of the products indicated.

   Where Specifications specify products or manufacturers by name, accompanied by the term "**or equal**" or "**or approved equal**", comply with the Contract Document provisions concerning "substitutions" to obtain approval for use of an unnamed product.

2. Descriptive Specification Requirements: Where Specifications describe a product or assembly, listing exact characteristics required, with or without use of a brand or trade name, provide a product or assembly that provides the characteristics and otherwise complies with Contract requirements.

3. Performance Specification Requirements: Where Specifications require compliance with performance requirements, provide products that comply with these requirements and are recommended by the manufacturer for the application indicated.

   Manufacturer's recommendations may be contained in published product literature or by the manufacturer's certification of performance.

4. Compliance with Standards, Codes, and Regulations: Where Specifications only require compliance with an imposed code, standard, or regulation, select a product that complies with the standards, codes, or regulations specified.

5. Visual Matching: Where Specifications require matching an established Sample (match existing), the Architect's decision will be final on whether a proposed product matches

satisfactorily.
Where no product is available within the specified category, matches satisfactorily and complies with other specified requirements; comply with provisions of the Contract Documents concerning "substitutions" (Section 01631 - Product Substitutions) for selection of a matching product in another product category.

6. Visual Selection: Where specified product requirements include the phrase "... as selected from manufacturer's standard colors, patterns, textures ..." or a similar phrase, select a product and manufacturer that complies with specified requirements. The Architect will select the color, pattern, and texture from the product line selected. Any selections within the product line which are unavailable, no longer make or superseded by another should be so marked.

PART 3 - EXECUTION

3.01 INSTALLATION OF PRODUCTS

A. Comply with manufacturer's instructions and recommendations for installation of products in the applications indicated. Anchor each product securely in place, accurately located and aligned with other Work.

B. Clean exposed surfaces and protect as necessary to ensure freedom from damage and deterioration at time of Substantial Completion.

END OF SECTION 015500

SECTION 015719 - EROSION CONTROL AND ENVIRONMENTAL PROTECTION

1.1 INTENT

It is the intent of these specifications to provide supplemental information to the contents of the construction drawings on the quality of materials, execution, measurement, etc. These specifications are general in nature and may contain products and requirements which are not applicable to the project. Discrepancies between these specifications and the construction drawings, either imagined or real, shall be brought to the attention of the Contracting officer for clarification.

1.2 DESCRIPTION OF WORK

Comply with the provisions of the following codes and standards, except as otherwise shown or specified:

"Standard Specifications for Road and Bridge Construction", Florida Department of Transportation, latest edition...
"Roadway and Traffic Design Standards", Florida Department of Transportation, latest edition.
"American Society for Testing and Materials (ASTM) Publications" as follow:

D 123-87	Standard Terminology Relating to Textiles
D 1683-81	Failure in Sewn Seams of Woven Fabrics
D 2487-83	Test Method for Classification of Soils for Engineering Purposes
D 3786-80	Standard Test Method for Mullen Burst Strength
D 3787-80	Bursting Strength of Knitted Goods - Constant-Rate-of-Traverse (CRT) Ball Burst
D 4439-87	Standard Terminology for Geotextiles
D 4533-85	Standard Test Method for Trapezoid Tearing Strength of Geotextiles
D 4632-86	Standard Test Method for Breaking Load and Elongation of Geotextiles (Grab Method)
VTM-51-79	Filtration Efficiency
VTM-51-79	Slurry Flow Rate

Certification: The contractor shall be responsible for providing the required material certifications prior to construction. Failure to provide certification may result in rejection of the material and replacement at no cost to the Owner.

Testing: An independent testing and inspection service will not be required for the work of this section.

1.3 SUBMITTALS

Material Certificates: Provide copies of materials certificates signed by material producer and Contractor, certifying that each material item complies with or exceeds specified requirements. When test requirements are specified, the contractor shall supply results performed by a certified testing laboratory.

1.4 TEMPORARY EROSION CONTROL (VEGETATION AND COVERINGS)

General: Temporary erosion control features shall consist of, but not be limited to, temporary grassing, temporary sodding, temporary mulching, sandbagging, artificial coverings, berms, and baled hay or straw.

Temporary Grassing: Temporary grassing shall be as specified in Section 13 except as modified herein.

Perennial grass seed may be omitted if permanent erosion control will be placed prior to death of annual grass.

Temporary Sod: Sod shall be as specified in Section 12.
Temporary Mulch: Mulch shall be as specified in Section 13.

Sandbagging: Sandbagging shall consist of furnishing and placing sandbags in configurations, so as to control erosion and siltation.

Artificial Coverings: This work shall consist of furnishing and applying fiber mats, netting, plastic sheeting, or other approved covering to the earth surfaces.

Baled Hay or Straw: This work shall consist of construction of baled hay or straw dams to protect against downstream accumulations of silt. The baled hay or straw dams shall be constructed in accordance with the details shown in the construction drawings or, when details are not shown, in accordance with the FDOT Standard Index No. 102.

1.5 TEMPORARY EROSION CONTROL (SILT FENCES)

General: Temporary erosion control features shall consist of, but not be limited to, silt fences and staked turbidity barriers. The work shall consist of furnishing, installing, maintaining, and removing temporary fences and barriers in accordance with the manufacturer's recommendations, these specifications, the details shown on the plans, or, when details are not shown, in accordance with the FDOT Standard Index No. 102 & 103. The barrier type(s) will be at the Contractor's option unless otherwise specified in the plans.

Silt Fence: Silt fence or sediment control fence shall consist of a geotextile fabric attached to posts. The geotextile fabric shall be a woven or non-woven fabric as specified herein. Posts shall be a minimum length of five feet rough or surfaced four-inch by four-inch wood, three-inch minimum diameter wood or steel at least 1.33 pounds per linear foot. When called for, wire reinforcement shall be poultry mesh, a minimum height of 36 inches, 20 gauge wire minimum, with a mesh spacing of one inch. As an alternative, Type A fence conforming to Section 966, FDOT Standard Specifications, may be used.

Staked Turbidity Barrier: In addition to the requirements for a temporary silt fence contained herein, the fabric used for staked turbidity barrier shall have a double stitched hem at the top of the fabric into which has been sewn a braided nylon cord with a minimum diameter of 1/8 inch running the full length of that section of fabric. Supports for staked turbidity barriers shall be a minimum length of three feet seasoned two-inch by four-inch wood, 2-1/2 inch minimum diameter wood, or steel at least 1.33 pounds per linear foot.

1.6 GEOTEXTILES

Filter Fabric: The geotextile fabric shall be a woven or non-woven fabric consisting of long-chain polymeric filaments or yarns such as polypropylene, polyethylene, polyester, polyamides, or polyvinyl chloride formed into a stable network such that the filaments or yarns retain their relative position to each other. The base plastic shall contain stabilizers and/or inhibitors to make the filaments resistant to deterioration from ultraviolet light, heat exposure, and commonly encountered chemicals. The edges of the fabric shall be selvaged or otherwise finished to prevent the outer yarn from pulling away from the fabric.

The fabric shall conform to the following physical requirements:

PROPERTIES TEST METHOD ACCEPTABLE VALUES

Seam Strength (min)	ASTM D 1683	120 lbs.
Mullen Burst Strength (min)	ASTM D 3786	200 psi
Puncture Strength	ASTM D 3787	60 lbs.(min)
Trapezoidal Tear Strength (min)	ASTM D 4533	50 lbs.
Grab Tensile Strength (min)	ASTM D 4632	120 lbs.
Elongation (max)	ASTM D 4632	25%
Filtration Efficiency (min)	VTM-51-79	75%
Slurry Flow Rate (min)	VTM-51-79	0.3 gpm/sf

Seams: The seams of the fabric shall be sewn with thread of a material meeting the chemical requirements for the fabric. The minimum seam strength shall comply with the property requirements contained herein.

Shipment and Storage: During shipment and periods of storage, the geotextile shall be protected from direct sunlight, ultra-violet rays, temperatures greater than 140 degrees Fahrenheit, mud, dirt, dust, and debris. Stockpiled materials shall be kept covered at all times.

1.7 EXECUTION

General: The installation of temporary erosion control features shall be coordinated with the construction of the permanent erosion control features to the extent necessary to assure effective and continuous control of erosion and water pollution throughout the life of the contract.

The Contractor shall take sufficient precautions to prevent pollution of streams, canals, lakes, reservoirs, and other water impoundments, with fuels, oils, bitumen's, calcium chloride, or other harmful materials. Also, he shall conduct and schedule his operations so as to avoid pollution or siltation of such streams, etc.

Except as necessary for construction, excavated material shall not be deposited in rivers, streams, canals, or impoundments, or in an position close enough thereto to be washed away by high water or runoff.

Where de-watering methods are used, the water shall be treated by one or more of the following methods prior to discharge off-site or into environmental areas: pumping into grassed swales or appropriate vegetated areas, sediment basins, or confined by an appropriate enclosure such as siltation curtains when other methods are not considered appropriate.
The Contractor shall not disturb lands or waters outside the limits of construction as staked, except as may be Found necessary and authorized by the Contracting officer.

The locations of and methods of operation in all detention areas, excavation and stockpile areas, and disposal areas shall meet the approval of the Contracting officer as being such that erosion during and after completion of the work will not likely result in detrimental conditions, siltation's, or water pollution.

Limitation of Exposure or Erodible Earth: The Contractor shall limit the surface areas of unprotected

erodible earth exposed by clearing and grubbing, excavation, or filling operations and shall provide immediate permanent or temporary erosion or pollution control measures to prevent contamination of any river, stream, lake, tidal water, reservoir, canal, or other impoundment or to prevent detrimental effects on property outside the project and damage to the project. The limitation of area in which excavation and filling operations may be underway shall be commensurate with the contractor's capability and progress in keeping the finish grading, grassing, sodding, and other such permanent erosion control measures current in accordance with the accepted schedule.

Under no conditions shall the surface area or erodible earth exposed by clearing and grubbing operations or by excavation and filling operations exceed one-half acre without specific prior approval by the Contracting officer. This limitation applies separately to clearing and grubbing operations and excavation and filling operations.

The Contracting officer may increase or decrease the amount of surface area allowed to be exposed at any one time, on the basis of his analysis of conditions on the project.

Permanent erosion control features shall be incorporated into the project at the earliest practical time. Temporary erosion control features will be used to control erosion prior to the time it is practical to construct permanent control features or to provide immediate temporary control of erosion that develops during normal construction operations, but is not associated with permanent erosion control features on the project. In no case shall be exposure of erodible earth be for more than five days without erosion control features being implemented.

Temporary erosion control features may be authorized for use in controlling erosion in areas where stage construction or other conditions not under the control of the Contractor preclude completion of a section of work in a continuous manner and in areas where construction operations which must be performed subsequently will cause damage to permanent erosion control features constructed.

When the item of Topsoil or Muck Blanket is included in the contract, the rate of construction of these items may be limited by the availability of topsoil or muck from the normal grading operations. The existence of this condition will be considered as precluding completion of a section or roadway in a continuous manner, and use of temporary erosion control features will be used in areas so affected.

The Contractor shall schedule his operations such that the area of unprotected erodible earth exposed at any one time is not larger than the minimum area necessary for efficient construction operations, and the duration of exposed, uncompleted construction to the elements shall be as short as practicable.

Clearing and grubbing shall be so scheduled and performed that grading operations can follow immediately thereafter, and grading operations shall be so scheduled and performed that permanent erosion control features can follow immediate thereafter if conditions on the project permit.

1.8 TEMPORARY EROSION CONTROL (VEGETATION AND COVERINGS)

General: Temporary vegetative erosion control features shall be installed in accordance with Section 13. Temporary coverings shall be installed in accordance with the manufacturer's recommendations.

1.9 TEMPORARY EROSION CONTROL (SILT FENCES)

Temporary Silt Fence: Temporary silt fence shall be erected at locations as shown on the plans or as approved by the Contracting officer. The filter fabric shall be reinforced with wire fence, when called for, and the post spacings shall not exceed ten feet. The wire reinforcement shall be installed so that the filter fabric is on the upstream side of the fence, and both the wire fence and the filter fabric are on the upstream side of the posts. Posts shall be uniformly installed with approximately 20 degrees inclination toward the potential silt load (upstream) area. The silt fence shall be maintained in an effective condition at all times while in use.

Filter fabric shall be a minimum of 45 inches wide and shall be secured to the post or fence by suitable

staples, tie wire, or hog rings in such a manner as to prevent tearing of the fabric. The bottom of the filter fabric shall be entrenched into the ground a minimum of eight inches to prevent water from flowing under the fence. Filter fabric shall be spliced together only at support posts with a minimum of six-inch overlap and securely sealed.

Staked Turbidity Barrier: Staked turbidity barrier shall be securely fastened to wood or steel supports which are spaced at maximum intervals of six feet and driven a minimum of 12 inches into the ground. A minimum of three supports shall be used. The bottom of the fabric shall be entrenched into the existing ground a minimum of eight inches. The staked turbidity barrier shall be a minimum of 15 inches in height and shall not exceed 18 inches in height.

The support line sewn in the top hem of the filter fabric shall be used at each post location to secure the fabric to the post at an appropriate height.

Staked turbidity barriers shall be installed across ditch lines and at temporary locations as shown on the plans or approved by the Contracting officer where continuous construction activities change the natural contour and drainage runoff.

Posts in staked turbidity barriers shall be installed in the vertical position unless otherwise directed by the Contracting officer.

Floating Turbidity Barrier: This work shall consist of the installation and removal of floating turbidity barriers to contain silt and other deleterious materials that may occur as the result of dredging, filling, or other construction activities in waters of the State. The type barrier used will be installed in accordance with the details contained in the plans, or, when details are not shown, in accordance with the FDOT Standard Index No. 103, or as approved by the Contracting officer. Alternate methods may be approved provided that compliance with applicable permit conditions and State water quality standards are maintained.

1.10 INSPECTION AND MAINTENANCE

General: The Contractor shall, at his expense, provide routine maintenance of permanent and temporary erosion control features until the project is completed and accepted. The Contractor shall inspect all temporary erosion control measures immediately after each rainfall and at least daily during prolonged rainfall. Any deficiencies shall be immediately corrected by the Contractor.

Silt Fences and Turbidity Barriers: The Contractor shall make a daily review of the location of silt fences and turbidity barriers to ensure that the silt fence or turbidity barriers are properly located for effectiveness and contain no breaches. Where deficiencies exist, additional silt fences or turbidity barriers shall be installed as directed.

Sediment deposits shall be removed when the deposit reaches approximately one-half of the volume capacity of the temporary silt fence or turbidity barrier as directed. Any sediment deposits remaining in place after the temporary silt fence or turbidity barrier is no longer required shall be dressed to conform with the finished grade, prepared and finished as shown on the construction plans, or seeded in accordance with Section 13.

END OF SECTION 015719

THIS PAGE INTENTIONALLY LEFT BLANK

SECTION 01 70 00 - CONTRACT CLOSEOUT

PART 1 - GENERAL

REQUIREMENTS:

Closeout is hereby defined to include general requirement near end of Contract Time in preparation for final acceptance, final payment, normal termination of contract, occupancy by Owner and similar actions evidencing completion of the Work. Time of closeout is directly related to "Substantial Completion" and therefore may be either a single time period for entire work or a series of time periods for individual parts of the work which have been certified as substantially complete at different dates. That time variation (if any) shall be applicable to other provisions of this section.

PREREQUISITES TO SUBSTANTIAL COMPLETION:

A. Prior to requesting Architect's/Engineer's inspection for certification of substantial completion for either entire Work or portions thereof, complete the following and list known exceptions in request:

1. In progress payment request, show either 100% completion for portion of work claimed as "substantially complete" or list incomplete items, value of incompletion and reasons for being incomplete.

2. Include supporting documentation for completion as indicated in these Contract Documents.

3. Submit statement showing accounting of changes to the Contract sum.

4. Advise Owner of pending insurance change-over requirements.

5. Submit specific warranties, workmanship/maintenance bonds, maintenance agreements, final certifications and similar documents.

6. Obtain and submit releases enabling Owner's full and unrestricted use of the Work and access to services and utilities, including (where required) occupancy permits, operating certificates and similar releases.

7. Deliver tools, spare parts, extra stocks of materials and similar physical items to Owner.

8. Complete start-up testing of systems and instructions of Owner's operating/maintenance personnel. Discontinue (or change over) and remove from project site temporary facilities and services, along with construction tools and facilities, mock-ups and similar elements.

9. **Deliver original, fully executed hard PERMIT Card with all appropriate signatures indicating each applicable Division is finally completed and signed off by the appropriate tradesperson.**

B. Upon receipt of Contractor's request, Architect/Engineer will either proceed with inspection or advise contractor of prerequisites not fulfilled. Following initial inspection, Architect/Engineer will either prepare certificate of substantial completion or advise the contractor of work which must be performed prior to issuance of certificate; and repeat inspection when requested and assured that work has been substantially completed. Results of completed inspection will form initial "punch-list" for final acceptance.

PREREQUISITES TO FINAL ACCEPTANCE

A. Prior to requesting Architect's/Engineer's final inspection for certification of final acceptance and final payment as required by General Conditions, complete the following and list known exceptions (if any) in request:

1. Submit final payment request with final releases and supporting documentation not previously

submitted and accepted. Include certificates of insurance for products and completed operations where required.

2. Submit updated final statement accounting for additional (final) changes to Contract Sum.

3. Submit certified copy of Architect's/Engineer's final punch-list of itemized work to be completed or corrected, stating that each item has been completed or otherwise resolved for acceptance, endorsed and dated by Architect/Engineer.

4. Submit final meter readings for utilities, measured record of stored fuel and similar data as of time of substantial completion or when Owner took possession of and responsibility for corresponding elements of the work.

5. Submit original Consent of Surety.

6. Submit final liquidated damages settlement statement, acceptable to Owner.

7. Submit record drawings, maintenance manuals, final project photographs, damage or settlement survey, property survey and similar final record information.

8. Complete final cleaning up requirements, including touch-up of marred surfaces.

9. Touch-up and otherwise repair and restore marred exposed finishes.

10. Revise and submit evidence of final, continuing insurance coverage complying with insurance requirements.

11. Certificates of elevator inspection.

12. Mechanical:

    a. Air System Test and Balance (prepared by Owner's independent agent)
    b. Piping pressure tests and certificates
    c. Project certification

13. Electrical:

    a. System tests
    b. Project certification

B. Re-inspection Procedure:

Upon receipt of Contractor's notice that work has been completed including punch-list items resulting from earlier inspections, and excepting incomplete items delayed because of acceptable circumstances, Architect/Engineer will re-inspect work. Upon completion of re-inspection, Architect/Engineer will either prepare certificate of final acceptance or advise Contractor of work not completed or obligations not fulfilled as required for final acceptance. If necessary, procedure will be repeated.

If re-inspections of above referenced items are required by the Architect/Engineer due to the failure of any of the Work to comply with the claims made by the Contractor as to the status of their completeness, the Owner will deduct the costs incurred by such re-inspections from the Contract amount.

RECORD DOCUMENT SUBMITTAL:

A. Specific requirements for record documents are indicated in individual sections of these specifications. Other

requirements are indicated in General Conditions. General submittal requirements are indicated in Section 01 33 00. Do not use record documents for construction purposes; protect from deterioration and loss in a secure, fire-resistive location; provide access to record documents for Architect's/Engineer's reference during normal working hours.

At time of final acceptance, submit complete sets of all required record documents to the Architect/Engineer for Owner's records.

B. Record Drawings:

Maintain a white-print set of contract drawings and shop drawings in clean, undamaged condition with mark-up of actual installations which vary substantially from the work as originally shown. Mark whichever drawings are most capable of showing "field" condition fully and accurately; however, where shop drawings are used for mark-up, record a cross-reference at corresponding location on working drawings. Mark-up new information which is recognized to be of importance to Owner but was for some reason not shown on either contract drawings or shop drawings. Give particular attention to concealed work which would be difficult to measure and record at a later date. Note related change order numbers where applicable.

Upon completion of the Work, this data shall be recorded to scale, by a competent draftsman on transparent paper of the Contract Drawings. Where changes are to be recorded, the prints shall be erased in such a way as to properly represent the work as installed. Where the work was installed exactly as shown on the Contract drawings, the prints shall not be disturbed. In showing the changes, the same legend shall be used to identify piping, etc., as was used on the Contract Drawings.

The Contractor shall review the completed record drawings and ascertain that all data furnished on the drawings are accurate and truly represent the Work as actually installed. When manholes, boxes, underground conduits, plumbing, hot or chilled water lines, etc., are involved as part of the Work, the Contractor shall furnish true elevations and locations, all properly referenced for the site. Information for reference data can be obtained from the office of the Architect/Engineer. Upon completion, the subcontractor involved shall date and sign the drawings, signifying compliance with the requirements set forth herein prior to submission of prints required.

The Contractor shall sign all pages to certify completeness of the Record Set of Drawings. Contractor shall submit the two sets of prints to the Architect/Engineer for the Owner.

C. Electronic Files of Record Drawings

If the Construction Documents were created by Computer Aided Drafting (CAD) then upon the receipt of the final record drawings from the Contractor, the Architect/Engineer shall revise the electronic files to reflect the as-built conditions. The CAD files shall be in a file format that can be read by Autocad version 2000.

A copy of the electronic files shall be recorded onto compact disk media. Two (2) copies of the disk shall be submitted to the Owner at time of transference of the Record Drawings.
Each disk shall be labeled with:

- Name of Project
- Name of General Contractor and or Construction Manager at Risk
- Name of Architect, or Engineer, and their Address
- Description of software used to create files

D. Record Specifications:

Maintain one copy of specifications including addenda, change orders and similar modifications issued in printed form during construction and mark-up variations (of substance) in actual Work in comparison with text of specifications and modifications as issued. Give particular attention to substitutions, selection of options and similar information on work where it is concealed or cannot otherwise be readily discerned at a later date by direct observation. Note related record drawing information and product data where applicable.

E. Record Shop Drawings and Product Data:

Maintain one copy of each product data submittal and mark-up significant variations in actual work in comparison with submitted information. Include both variations from manufacturer's instructions and recommendations for installation. Give particular attention to concealed products and portions of the Work which cannot otherwise be readily discerned at a later date by direct observation. Note related change orders and mark-up or record drawings and specifications.

F. Record Sample Submittal:

Immediately prior to date(s) of substantial completion, Architect/Engineer (and including Owner's personnel where desired) will meet with Contractor at site and will determine which (if any) of submitted samples maintained by Contractor during progress of the work are to be transmitted to Owner for record purposes. Comply with Architect's/Engineer's instructions for packaging, identification marking and delivery to owner's sample storage space.

G. Miscellaneous Record Submittals:

Refer to other sections of these specifications for requirements of miscellaneous record-keeping and submittals in connection with actual performance of the Work. Immediately prior to date(s) of substantial completion, complete miscellaneous records and place in good order, properly identified and bound or filed, ready for continued use and reference.

H. Operation and Maintenance Data:

See section 01 73 00

I. Warranties and Bonds:

See section 01 74 00

J. Spare Parts and Maintenance Materials:

See section 01 75 00

FINAL CLEANING

A. Special cleaning for specific units of work is specified in sections of Divisions 2 through 16. General cleaning during progress or work is specified in General Conditions and as temporary service in "Temporary Facilities" section of this Division. Provide final cleaning of the work at time indicated, consisting of cleaning each surface or unit of Work to normal "clean" condition expected for a first-class building cleaning and maintenance program. Comply with manufacturer's instructions for cleaning operations. The following are examples of cleaning levels required:

1. Remove labels which are not required as permanent labels.

2. Clean transparent materials including mirrors and window or glass to a polished condition removing substances which are noticeable as vision-obscuring materials. replace broken glass and damaged transparent materials.

3. Clean exposed exterior and interior hard-surfaced finishes to a dirt-free condition, free of dust, stains, films and similar noticeable distracting substances. Avoid disturbance of natural weathering of exterior surfaces. Restore reflective surfaces to original reflective condition.

4. Wipe surfaces of mechanical and electrical equipment clean; remove excess lubrication and other substance.

5. Remove debris and surface dust from limited-access spaces including roofs, plenums, shafts, trenches, equipment vaults, manholes and similar spaces.

6. Clean concrete floors in non-occupied spaces broom clean.

7. Vacuum clean carpeted surfaces and similar soft surfaces.

8. Clean plumbing fixtures to a sanitary condition free of stains including those resulting from water exposure.

9. Clean light fixtures and lamps so as to function with full efficiency.

10. Clean project site (yard and grounds) of litter and foreign substances. Sweep paved areas to a broom-clean condition; remove stains, petro-chemical spills and other foreign deposits. Rake grounds which are neither planted nor paved, to a smooth, even-textured surface.

11. Vacuum clean and sanitize all cabinetwork, equipment, etc. for a move-in condition.

B. Removal of Protection:

Remove temporary protection devices and facilities which were installed during course of the Work to protect previously completed Work during remainder of construction period.

C. Compliances:

Comply with safety standards and governing regulations for cleaning operations. Do not burn waste materials at site or bury debris or excess materials on Owner's property or discharge volatile or other harmful or dangerous materials into drainage systems; remove waste materials from site and dispose of in a lawful manner.

Where extra materials of value remaining after completion of associated Work have become Owner's property, dispose of these to Owner's best advantage as directed.

CLOSEOUT DOCUMENTS CHECKLIST

All items listed below, with the exception of Item No. 1 and Item No. 2 shall be bound in individual heavy duty 3-ring vinyl covered binders. Mark appropriate identification on front and spine of each binder.

All items shall be submitted in triplicate within fifteen day of Substantial Completion for the project.

1. Application and Certification for Payment (Final). Four copies with original signatures and seals.

2. Final schedule of contract values. Four copies attached to Application and Certification for Payment.

3. Contractor's Affidavit of Payment of Debts (AIA G706).

4. Contractor's Affidavit of Release of Liens from all Contractors, Subcontractors, and Suppliers (AIA G706A).

5. Power of Attorney from Surety to make Final Payment.

6. Consent of Surety to Final Payment (AIA G707).

7. Contractor's Guarantee and Warranties as specified under Division 01740.

8. Fully executed Roof Warranty in the name of the Owner.

9. Special warranties as required by the specifications, in the name of the Owner.

10. Provide a list summarizing the various guarantees and warranties and stating the following with respect to each:
    a. Character of work affected.
    b. Name, address and telephone number of each Subcontractor.
    c. Name, address and telephone number of each local firm designated to provide warranty service for an out-of-town firm. Copy of agreement between the firms.
    d. Period of guarantee and effective date.
    e. Statement of guarantee in the following form.

    "If within any guarantee period, repairs or changes are required in conjunction with the guarantee work, which in the opinion of the Architect or Engineer is rendered necessary as the result of the use of materials, equipment or workmanship, which are defective or inferior, or not in accordance with the terms of the Contract, the Contractor shall, upon written notice from the Owner, and without expense to the Owner, proceed within twenty four (24) house to place in satisfactory condition in every particular all of such guaranteed work, correct all defects therein; and make good all damages to the structure or site or equipment or contents thereof disturbed in fulfilling any such guarantee work.

11. Verification that the Owner's personnel has been trained in the use of their new equipment. Submit attendance lists and videotape record of all training sessions.

12. Operation and Maintenance Manuals.

13. Equipment Inventory List - A list of the following equipment furnished for the project, to include drawings code designation, location (FISH number) description, manufacturer, full model number, serial number, warranty period and warranty expiration date.
    a. All HVAC equipment.
    b. Any plumbing equipment which carries a serial number (water heaters, compressors, electric water coolers, etc.)
    c. Emergency generator.
    d. Contractor furnished appliances.

14. Notarized Affidavit of all Subcontractor payrolls, bills for materials/equipment and other indebtedness paid and satisfied.

15. As-built drawings. Provide in accordance with other specification sections.

16. Energy management system programming, operation, maintenance, and parts service manuals. Guaranteed parts price list.

17. Date certain schedule for Bay District Schools personnel to be trained at Energy Management Supplier's training facility.

18. Punch lists signed off by Owner's Representatives.

END OF SECTION 01 70 00

SECTION 017300 - EXECUTION

PART 1 - GENERAL

1.1 SUMMARY

A. Section includes general administrative and procedural requirements governing execution of the Work, including, but not limited to, the following:

1. Construction layout.
2. Field engineering and surveying.
3. Installation of the Work.
4. Cutting and patching.
5. Progress cleaning.
6. Starting and adjusting.
7. Protection of installed construction.
8. Correction of the Work.

B. Related Requirements:
1. Section 017700 "Closeout Procedures" for submitting final property survey with Project Record Documents, recording of Owner-accepted deviations from indicated lines and levels, replacing defective work, and final cleaning.
2. Section 024119 "Selective Demolition" for demolition and removal of selected portions of the building.

1.2 DEFINITIONS

A. Cutting: Removal of in-place construction necessary to permit installation or performance of subsequent work.

B. Patching: Fitting and repair work required to restore construction to original conditions after installation of subsequent work.

1.3 INFORMATIONAL SUBMITTALS

A. Certified Surveys: Submit **two** copies signed by **land surveyor**.

B. Certificates: Submit certificate signed by **land surveyor**, certifying that location and elevation of improvements comply with requirements.

1.4 CLOSEOUT SUBMITTALS

A. Final Property Survey: Submit signed/ sealed digital copy showing the Work performed and record survey data.

1.5 QUALITY ASSURANCE

A. Land Surveyor Qualifications: A professional land surveyor who is legally qualified to practice in jurisdiction where Project is located and who is experienced in providing land-surveying services of the kind indicated.

B. Cutting and Patching: Comply with requirements for and limitations on cutting and patching of construction elements.

1. Structural Elements: When cutting and patching structural elements, or when encountering the need for cutting and patching of elements whose structural function is not known, notify Architect of locations and details of cutting and await directions from Architect before proceeding. Shore, brace, and support structural elements during cutting and patching. Do not cut and patch structural elements in a manner that could change their load-carrying capacity or increase deflection.
2. Operational Elements: Do not cut and patch operating elements and related components in a manner that results in reducing their capacity to perform as intended or that results in increased maintenance or decreased operational life or safety.
3. Other Construction Elements: Do not cut and patch other construction elements or components in a manner that could change their load-carrying capacity, that results in reducing their capacity to perform as intended, or that results in increased maintenance or decreased operational life or safety.
4. Visual Elements: Do not cut and patch construction in a manner that results in visual evidence of cutting and patching. Do not cut and patch exposed construction in a manner that would, in Architect's opinion, reduce the building's aesthetic qualities. Remove and replace construction that has been cut and patched in a visually unsatisfactory manner.

C. Manufacturer's Installation Instructions: Obtain and maintain on-site manufacturer's written recommendations and instructions for installation of specified products and equipment.

PART 2 - PRODUCTS

2.1 MATERIALS

A. Comply with requirements specified in other Sections.

1. For projects requiring compliance with sustainable design and construction practices and procedures, use products for patching that comply with sustainable design requirements.

B. In-Place Materials: Use materials for patching identical to in-place materials. For exposed surfaces, use materials that visually match in-place adjacent surfaces to the fullest extent possible.

1. If identical materials are unavailable or cannot be used, use materials that, when installed, will provide a match acceptable to Architect for the visual and functional performance of in-place materials. Use materials that are not considered hazardous.

C. Cleaning Agents: Use cleaning materials and agents recommended by manufacturer or fabricator of the surface to be cleaned. Do not use cleaning agents that are potentially hazardous to health or property or that might damage finished surfaces.

1. Use cleaning products that comply with Green Seal's GS-37, or if GS-37 is not applicable, use products that comply with the California Code of Regulations maximum allowable VOC levels.

PART 3 - EXECUTION

3.1 EXAMINATION

A. Existing Conditions: The existence and location of underground and other utilities and construction indicated as existing are not guaranteed. Before beginning sitework, investigate and verify the existence and location of underground utilities, **mechanical and electrical systems,** and other construction affecting the Work.

1. Before construction, verify the location and invert elevation at points of connection of sanitary sewer, storm sewer, gas service piping, and water-service piping; underground electrical services; and other utilities.
2. Furnish location data for work related to Project that must be performed by public utilities serving Project site.

B. Examination and Acceptance of Conditions: Before proceeding with each component of the Work, examine substrates, areas, and conditions, with Installer or Applicator present where indicated, for compliance with requirements for installation tolerances and other conditions affecting performance. Record observations.

1. Examine roughing-in for mechanical and electrical systems to verify actual locations of connections before equipment and fixture installation.
2. Examine walls, floors, and roofs for suitable conditions where products and systems are to be installed.
3. Verify compatibility with and suitability of substrates, including compatibility with existing finishes or primers.

C. Written Report: Where a written report listing conditions detrimental to performance of the Work is required by other Sections, include the following:

1. Description of the Work, including Specification Section number and paragraph, and Drawing sheet number and detail, where applicable.
2. List of detrimental conditions, including substrates.
3. List of unacceptable installation tolerances.
4. Recommended corrections.

D. Proceed with installation only after unsatisfactory conditions have been corrected. Proceeding with the Work indicates acceptance of surfaces and conditions.

3.2 PREPARATION

A. Field Measurements: Take field measurements as required to fit the Work properly. Recheck measurements before installing each product. Where portions of the Work are indicated to fit to other construction, verify dimensions of other construction by field measurements before fabrication. Coordinate fabrication schedule with construction progress to avoid delaying the Work.

B. Space Requirements: Verify space requirements and dimensions of items shown diagrammatically on Drawings.

C. Review of Contract Documents and Field Conditions: Immediately on discovery of the need for clarification of the Contract Documents, submit a request for information to Architect in accordance with requirements in Section 013100 "Project Management and Coordination."

3.3 CONSTRUCTION LAYOUT

A. Verification: Before proceeding to lay out the Work, verify layout information shown on Drawings, in relation to the property survey and existing benchmarks and existing conditions. If discrepancies are discovered, notify Architect promptly.

B. Engage a **land surveyor** experienced in laying out the Work, using the following accepted surveying practices:

1. Establish benchmarks and control points to set lines and levels at each story of construction and elsewhere as needed to locate each element of Project.
2. Establish limits on use of Project site.
3. Establish dimensions within tolerances indicated. Do not scale Drawings to obtain required dimensions.
4. Inform installers of lines and levels to which they must comply.
5. Check the location, level and plumb, of every major element as the Work progresses.
6. Notify Architect when deviations from required lines and levels exceed allowable tolerances.
7. Close site surveys with an error of closure equal to or less than the standard established by authorities having jurisdiction.

C. Site Improvements: Locate and lay out site improvements, including pavements, grading, fill and topsoil placement, utility slopes, and rim and invert elevations.

D. Building Lines and Levels: Locate and lay out control lines and levels for structures, building foundations, column grids, and floor levels, including those required for mechanical and electrical work. Transfer survey markings and elevations for use with control lines and levels. Level foundations and piers from two or more locations.

E. Record Log: Maintain a log of layout control work. Record deviations from required lines and levels. Include beginning and ending dates and times of surveys, weather conditions, name and duty of each survey party member, and types of instruments and tapes used. Make the log available for reference by Architect.

3.4 FIELD ENGINEERING

A. Identification: Owner will identify existing benchmarks, control points, and property corners.

B. Reference Points: Locate existing permanent benchmarks, control points, and similar reference points before beginning the Work. Preserve and protect permanent benchmarks and control points during construction operations.

1. Do not change or relocate existing benchmarks or control points without prior written approval of Architect. Report lost or destroyed permanent benchmarks or control points promptly. Report the need to relocate permanent benchmarks or control points to Architect before proceeding.
2. Replace lost or destroyed permanent benchmarks and control points promptly. Base replacements on the original survey control points.

C. Benchmarks: Establish and maintain a minimum of **two** permanent benchmarks on Project site, referenced to data established by survey control points. Comply with authorities having jurisdiction for type and size of benchmark.

1. Record benchmark locations, with horizontal and vertical data, on Project Record Documents.
2. Where the actual location or elevation of layout points cannot be marked, provide temporary reference points sufficient to locate the Work.

3. Remove temporary reference points when no longer needed. Restore marked construction to its original condition.

3.5 INSTALLATION

A. Locate the Work and components of the Work accurately, in correct alignment and elevation, as indicated.

1. Make vertical work plumb, and make horizontal work level.
2. Where space is limited, install components to maximize space available for maintenance and ease of removal for replacement.
3. Conceal pipes, ducts, and wiring in finished areas unless otherwise indicated.
4. Maintain minimum headroom clearance of **96 inches (2440 mm)** in occupied spaces and [**90 inches (2300 mm)** in unoccupied spaces, unless otherwise indicated on Drawings.

B. Comply with manufacturer's written instructions and recommendations for installing products in applications indicated.

C. Install products at the time and under conditions that will ensure satisfactory results as judged by Architect. Maintain conditions required for product performance until Substantial Completion.

D. Conduct construction operations, so no part of the Work is subjected to damaging operations or loading in excess of that expected during normal conditions of occupancy of type expected for Project.

E. Sequence the Work and allow adequate clearances to accommodate movement of construction items on-site and placement in permanent locations.

F. Tools and Equipment: Select tools or equipment that minimize production of excessive noise levels.

G. Templates: Obtain and distribute to the parties involved templates for Work specified to be factory prepared and field installed. Check Shop Drawings of other portions of the Work to confirm that adequate provisions are made for locating and installing products to comply with indicated requirements.

H. Attachment: Provide blocking and attachment plates and anchors and fasteners of adequate size and number to securely anchor each component in place, accurately located and aligned with other portions of the Work. Where size and type of attachments are not indicated, verify size and type required for load conditions with manufacturer.

1. Mounting Heights: Where mounting heights are not indicated, mount components at heights directed by Architect.
2. Allow for building movement, including thermal expansion and contraction.
3. Coordinate installation of anchorages. Furnish setting drawings, templates, and directions for installing anchorages, including sleeves, concrete inserts, anchor bolts, and items with integral anchors, that are to be embedded in concrete or masonry. Deliver such items to Project site in time for installation.

I. Joints: Make joints of uniform width. Where joint locations in exposed Work are not indicated, arrange joints for the best visual effect, as judged by Architect. Fit exposed connections together to form hairline joints.

3.6 CUTTING AND PATCHING

A. General: Employ skilled workers to perform cutting and patching. Proceed with cutting and patching at the earliest feasible time, and complete without delay.

1. Cut in-place construction to provide for installation of other components or performance of other construction, and subsequently patch as required to restore surfaces to their original condition.

B. Existing Warranties: Remove, replace, patch, and repair materials and surfaces cut or damaged during installation or cutting and patching operations, by methods and with materials so as not to void existing warranties.

C. Temporary Support: Provide temporary support of Work to be cut.

D. Protection: Protect in-place construction during cutting and patching to prevent damage. Provide protection from adverse weather conditions for portions of Project that might be exposed during cutting and patching operations.

E. Adjacent Occupied Areas: Where interference with use of adjoining areas or interruption of free passage to adjoining areas is unavoidable, coordinate cutting and patching in accordance with requirements in Section 011000 "Summary."

F. Existing Utility Services and Mechanical/Electrical Systems: Where existing services/systems are required to be removed, relocated, or abandoned, bypass such services/systems before cutting to **prevent** interruption to occupied areas.

G. Cutting: Cut in-place construction by sawing, drilling, breaking, chipping, grinding, and similar operations, including excavation, using methods least likely to damage elements retained or adjoining construction. If possible, review proposed procedures with original Installer; comply with original Installer's written recommendations.

1. In general, use hand or small power tools designed for sawing and grinding, not hammering and chopping. Cut holes and slots neatly to minimum size required, and with minimum disturbance of adjacent surfaces. Temporarily cover openings when not in use.
2. Finished Surfaces: Cut or drill from the exposed or finished side into concealed surfaces.
3. **Concrete and Masonry**: Cut using a cutting machine, such as an abrasive saw or a diamond-core drill.
4. Excavating and Backfilling: Comply with requirements in applicable Sections where required by cutting and patching operations.
5. Mechanical and Electrical Services: Cut off pipe or conduit in walls or partitions to be removed. Cap, valve, or plug and seal remaining portion of pipe or conduit to prevent entrance of moisture or other foreign matter after cutting.
6. Proceed with patching after construction operations requiring cutting are complete.

H. Patching: Patch construction by filling, repairing, refinishing, closing up, and similar operations following performance of other Work. Patch with durable seams that are as invisible as practicable, as judged by Architect. Provide materials and comply with installation requirements specified in other Sections, where applicable.

1. Inspection: Where feasible, test and inspect patched areas after completion to demonstrate physical integrity of installation.
2. Exposed Finishes: Restore exposed finishes of patched areas and extend finish restoration into retained adjoining construction in a manner that will eliminate evidence of patching and refinishing.

a. Clean piping, conduit, and similar features before applying paint or other finishing materials.
b. Restore damaged pipe covering to its original condition.

3. Floors and Walls: Where walls or partitions that are removed extend one finished area into another, patch and repair floor and wall surfaces in the new space. Provide an even surface of uniform finish, color, texture, and appearance. Remove in-place floor and wall coverings and replace with new materials, if necessary, to achieve uniform color and appearance.

a. Where patching occurs in a painted surface, prepare substrate and apply primer and intermediate paint coats appropriate for substrate over the patch, and apply final paint coat over entire unbroken surface containing the patch, corner to corner of wall and edge to edge of ceiling. Provide additional coats until patch blends with adjacent surfaces.

4. Ceilings: Patch, repair, or rehang in-place ceilings as necessary to provide an even-plane surface of uniform appearance.
5. Exterior Building Enclosure: Patch components in a manner that restores enclosure to a weathertight condition and ensures thermal and moisture integrity of building enclosure.

I. Cleaning: Clean areas and spaces where cutting and patching are performed. Remove paint, mortar, oils, putty, and similar materials from adjacent finished surfaces.

3.7 PROGRESS CLEANING

A. Clean Project site and work areas daily, including common areas. Enforce requirements strictly. Dispose of materials lawfully.

1. Comply with requirements in NFPA 241 for removal of combustible waste materials and debris.
2. Do not hold waste materials more than seven days during normal weather or three days if the temperature is expected to rise above 80 deg F (27 deg C).
3. Containerize hazardous and unsanitary waste materials separately from other waste. Mark containers appropriately and dispose of legally, according to regulations.

a. Use containers intended for holding waste materials of type to be stored.

4. Coordinate progress cleaning for joint-use areas where Contractor and other contractors are working concurrently.

B. Site: Maintain Project site free of waste materials and debris.

C. Work Areas: Clean areas where Work is in progress to the level of cleanliness necessary for proper execution of the Work.

1. Remove liquid spills promptly.
2. Where dust would impair proper execution of the Work, broom-clean or vacuum the entire work area, as appropriate.

D. Installed Work: Keep installed work clean. Clean installed surfaces according to written instructions of manufacturer or fabricator of product installed, using only cleaning materials specifically recommended. If specific cleaning materials are not recommended, use cleaning materials that are not hazardous to health or property and that will not damage exposed surfaces.

E. Concealed Spaces: Remove debris from concealed spaces before enclosing the space.

F. Exposed Surfaces: Clean exposed surfaces and protect as necessary to ensure freedom from damage and deterioration at time of Substantial Completion.

G. Waste Disposal: Do not bury or burn waste materials on-site. Do not wash waste materials down sewers or into waterways.

H. During handling and installation, clean and protect construction in progress and adjoining materials already in place. Apply protective covering where required to ensure protection from damage or deterioration at Substantial Completion.

I. Clean and provide maintenance on completed construction as frequently as necessary through the remainder of the construction period. Adjust and lubricate operable components to ensure operability without damaging effects.

J. Limiting Exposures: Supervise construction operations to ensure that no part of the construction, completed or in progress, is subject to harmful, dangerous, damaging, or otherwise deleterious exposure during the construction period.

3.8 STARTING AND ADJUSTING

A. Coordinate startup and adjusting of equipment and operating components with manufacturer’s requirements."

B. Start equipment and operating components to confirm proper operation. Remove malfunctioning units, replace with new units, and retest.

C. Adjust equipment for proper operation. Adjust operating components for proper operation without binding.

D. Test each piece of equipment to verify proper operation. Test and adjust controls and safeties. Replace damaged and malfunctioning controls and equipment.

E. Manufacturer's Field Service: Comply with qualification requirements in Section 014000 "Quality Requirements."

3.9 PROTECTION OF INSTALLED CONSTRUCTION

A. Provide final protection and maintain conditions that ensure installed Work is without damage or deterioration at time of Substantial Completion.

B. Protection of Existing Items: Provide protection and ensure that existing items to remain undisturbed by construction are maintained in condition that existed at commencement of the Work.

C. Comply with manufacturer's written instructions for temperature and relative humidity.

3.10 CORRECTION OF THE WORK

A. Repair or remove and replace damaged, defective, or nonconforming Work. Restore damaged substrates and finishes.

1. Repairing includes replacing defective parts, refinishing damaged surfaces, touching up with matching materials, and properly adjusting operating equipment.

B. Repair Work previously completed and subsequently damaged during construction period. Repair to like-new condition.

C. Restore permanent facilities used during construction to their specified condition.

D. Remove and replace damaged surfaces that are exposed to view if surfaces cannot be repaired without visible evidence of repair.

E. Repair components that do not operate properly. Remove and replace operating components that cannot be repaired.

F. Remove and replace chipped, scratched, and broken glass or reflective surfaces.

END OF SECTION 017300

THIS PAGE LEFT INTENTIONALLY BLANK.

SECTION 017419 - CONSTRUCTION WASTE MANAGEMENT AND DISPOSAL

PART 1 - GENERAL

1.1 SUMMARY

A. Section includes administrative and procedural requirements for the following:
   1. Disposing of nonhazardous **demolition and construction** waste.

1.2 DEFINITIONS

A. Construction Waste: Building, structure, and site improvement materials and other solid waste resulting from construction, remodeling, renovation, or repair operations. Construction waste includes packaging.

B. Demolition Waste: Building, structure, and site improvement materials resulting from demolition operations.

C. Disposal: Removal of demolition or construction waste and subsequent salvage, sale, recycling, or deposit in landfill, incinerator acceptable to authorities having jurisdiction, or designated spoil areas on Owner's property.

1.3 QUALITY ASSURANCE

A. Waste Management Coordinator Qualifications: Experienced firm, or individual employed and assigned by General Contractor, with a record of successful waste management coordination of projects with similar requirements.

1.4 WASTE MANAGEMENT PLAN

A. Submit waste management plan.

PART 2 - PRODUCTS

2.1 PERFORMANCE REQUIREMENTS

PART 3 - EXECUTION

3.1 PLAN IMPLEMENTATION

A. General: Implement approved waste management plan. Provide handling, containers, storage, signage, transportation, and other items as required to implement waste management plan during the entire duration of the Contract.

B. Site Access and Temporary Controls: Conduct waste management operations to ensure minimum interference with roads, streets, walks, walkways, and other adjacent occupied and used facilities.

1. Comply with Section 015000 "Temporary Facilities and Controls" for controlling dust and dirt, environmental protection, and noise control.

3.2 DISPOSAL OF WASTE

A. General: Except for items or materials to be salvaged or recycled, remove waste materials from Project site and legally dispose of them in a landfill or incinerator acceptable to authorities having jurisdiction.

1. Except as otherwise specified, do not allow waste materials that are to be disposed of accumulate on-site.
2. Remove and transport debris in a manner that will prevent spillage on adjacent surfaces and areas.

B. General: Except for items or materials to be salvaged or recycled, remove waste materials and legally dispose of at designated spoil areas on Owner’s property.

C. Burning: Do not burn waste materials.

END OF SECTION 017419

SECTION 017700 – CLOSEOUT PROCEDURES

PART 1 - GENERAL

1.01 SUBSTANTIAL COMPLETION: (See Section 00700 - General Conditions, Section 9.8).Before requesting inspection for certification of Substantial Completion, complete the following:

A. Change-over permanent locks and transmit keys to the Owner.

B. Complete start-up testing of systems, and instruction of the Owner's personnel. Remove temporary facilities from the site, along with construction tools, mock-ups, and similar elements.

C. Complete final clean up. Touch-up and repair and restore marred exposed finishes.

D. Submit record drawings (As-builts), maintenance manuals, damage or settlement survey, and similar record information.

E. Attain Occupancy permits.

1.02 INSPECTION PROCEDURES: When the Contractor considers the work substantially complete, he shall prepare and submit a comprehensive list of items to be completed and/or corrected to the Architect. The Contractor shall proceed to promptly complete and/or correct all items on the list.

A. Upon receipt of Contractor's list and assurance by the Contractor that the list has been addressed/ completed, the Architect will make an inspection for final verification that the list provided is comprehensive and includes all remaining work items to be completed or corrections required OR inform the Contractor of work to be completed before an inspection will be conducted.

B. After receipt of the completion/punch list and prior to the architect issuing substantial completion, the archutect shall require that every consultant who provided documents for the project (ie: electrical, HVAC, Plumbing, Architectural, Roof, telecomm, etc.) shall perform an onsite inspection of work completed under the scope of their responsibilities and provide a detailed final completion list of incomplete work or work requiring corrections.

C. This process will be the responsibility of the Architect to ensure this occurs and that the information gathered from those site visits is to be coordinated through the contractor, added to the contractor’s final completion/punch list, and issued to the owner. This will ensure that all required corrections are included in the final punch list prior to substantial completion being awarded.

D. When the work is substantially complete, the Architect will prepare the Certificate of Substantial Completion which shall establish the date of Substantial Completion.

E. Results of the completed inspection will form the basis of requirements for final acceptance, **including any items discovered at a later date considered necessary to be completed for final**.

1.03 FINAL ACCEPTANCE: (See Section 00700 - General Conditions Section 9.10). Before requesting inspection for certification of final acceptance and final payment, complete the following:

A. Submit a copy of the final inspection list stating that each item has been completed or otherwise resolved for acceptance.

B. Submit specific warranties, workmanship bonds, maintenance agreements, final certifications and

similar documents.

C. Refer to Section 01027 - Application for Payment - Final Payment Application.

D. Provide the Architect with 'Final Statement of Compliance', for the Owner.

1.04 REINSPECTION PROCEDURE (if required): The Architect will reinspect the Work upon receipt of notice that the Work has been completed, except items whose completion has been delayed because of circumstances acceptable to the Architect.

A. Prior to Final completion, A Final walk through/verification of completion/correction by the various design consultants shall occur. Final payment to the contractor shall not be released until the final completion /punch list is complete 100%.
B. Upon completion of reinspection, the Architect will then prepare a certificate of final acceptance or advise the Contractor of work that is incomplete or of obligations that have not been fulfilled but are required for final acceptance. If necessary, reinspection will be repeated.

1.05 RECORD DRAWINGS: Maintain a clean, undamaged set of blue or black line white-prints of Contract Drawings and Shop Drawings. Mark-up these drawings to show the actual installation where installation varies from that shown originally. Mark whichever drawing is most capable of showing conditions accurately. Give particular attention to concealed elements that would be difficult to measure and record at a later date. Maintain and review monthly with the Owner and Architect.

A. Organize record drawing sheets into manageable sets, bind with durable paper cover sheets, and print suitable titles, dates and other identification on the cover.
B. Maintain Record Documents in good order and in a clean, dry, legible condition, protected from deterioration and lost. Provide access to Project Record Documents for Architect's reference during normal working hours.
C. Upon completion of the Work, submit Record Drawings (red-line field as-builts) to the Architect for Owner's records.
D. As built documents are a requirement of final close out for the project. As built documents shall include all design revisions issued during the course of the project. Those revisions shall be marked on the documents in a way that provides clarity for the noted changes. It is at the sole discretion of the architect to determine what is and what is not adequate for as built documentation.
E. The contractor is expected to maintain as built documents throughout the course of the project work. Monthly review of the as built documents wherein the contractor shall show the architect what changes were accepted and have been noted as revisions to the project ON the as built documents each month.
F. Failure to maintain as built documentation during the course of the project may be grounds to hold progress payment.
G. Failure to provide adequate as built documentation shall be grounds to hold final payment pending receipt of acceptable as built documentation.

1.06 PROJECT RECORD SPECIFICATIONS: Maintain one copy of the Project Manual, including addenda. Mark-up to indicate the actual product installation where installation varies from that indicated in Specifications, addenda, and contract modifications. Give particular attention to substitutions, selection of options and similar information on elements that are concealed or cannot be readily discerned later by direct observation. Note related record drawing information and Product Data.

A. Maintain on site, in a 3-ring binder or other organized method, executed RFI's, ASI's, RFP's, CO's and other project record items.

B. All record of revisions is to be incorporated into the Project As-Built drawings

C. Upon completion of the Work, submit record Drawings and Specifications to the Architect for the Owner's records.

1.07 PROJECT AS-BUILT DRAWINGS: The Contractor shall, at his own expense, hire the Architect of Record to prepare as-built drawings. The Contractor shall provide to the Architect record drawings and record specifications. The Contractor is solely responsible for the content of the record drawings and the as-built documents.

A. Site As-built drawings shall comply with the following:

1. Show the actual locations of all components, including depth below grade, along with any changes and/or modifications to the Contract Drawings. Provide GPS coordinates for all below grade installations.
    a. During the course of the project, various utilities are buried on site. The project as-built documentation for utilities shall include a layout for as-built conditions of all buried underground utility runs to within 3 feet of actual.
    b. All above ground access points shall be detailed on site as built to within 1 foot of actual with GPS coordinates provided for each item.
    c. Items to be recorded include but are not limited to water Valves, sewer manholes, storm water manholes, and sewer and storm water cleanouts, electronic junction boxes buried on site, electrical junction boxes buried on site, site transformers, and any other items as indicated on the project design documents.
    d. All stub outs for utility tie ins shall be indicated on the as built plan.
    e. All utilities shall be labeled every 50 feet on the as built so as to allow easy identification in the field while using electronic as built plans. All utility items listed in item 3 above shall also be labeled on the as built plans.
    f. All dimensions and elevations, including invert elevations, shall be verified by field measurements.

2. The Contractor is cautioned to make all necessary measurements and elevations during installation to accurately locate all concealed items.

B. As-Built Survey: Contractor shall provide signed and sealed As-Built Survey of existing grades and structures as required by authorities having jurisdictions.

1.08 MAINTENANCE MANUALS: Organize maintenance data into sets of manageable size. Bind in individual heavy-duty 2-inch, 3-ring vinyl-covered binders, with pocket folders for folded sheet information. Mark identification on front and spine of each binder. Include the following information:

Emergency instructions.
Copies of warranties.
Recommended "turn around" cycles.
Shop Drawings and Product Data.
Spare parts list.
Wiring diagrams.
Inspection procedures.
Fixture lamping schedule.

1.09 OPERATING AND MAINTENANCE INSTRUCTIONS: Arrange for the installer of equipment that requires regular maintenance to meet with the Owner's personnel to provide instruction in proper operation and maintenance. Acceptance of the owner training provided is at the sole discretion of the owner. Training provided must be comprehensive in nature and include all pertinent aspects of use and maintenance for the item(s) requiring training. Include a detailed review of the following:

- Maintenance manuals.
- Tools.
- Control sequences.
- Warranties and bonds.
- Spare parts and materials.
- Lubricants.
- Hazards.
- Maintenance agreements and similar continuing commitments.

As part of instruction for operating equipment, demonstrate the following procedures:

- Start-up and shutdown.
- Noise and vibration adjustments.
- Emergency operations.
- Safety procedures.

All operation and training sessions shall be recorded and provided to the Owner. The contractor may use their own personnel to film the training provided. Verify with Owner the appropriate format of recording that should be used.

1.10 FINAL CLEANING: Employ experienced workers for final cleaning. Clean each surface to the condition expected in a commercial building cleaning and maintenance program. Complete the following, as a minimum before requesting inspection for certification of Substantial Completion:

A. Remove labels that are not permanent labels.

B. Clean transparent materials. Remove glazing compound. Replace chipped or broken glass.

C. Clean exposed hard-surfaced finishes to a dust-free condition, free of stains, films and similar foreign substances. Restore reflective surfaces to their original reflective condition. Leave concrete floors broom clean.

D. Vacuum carpeted surfaces.

E. Wipe surfaces of mechanical and electrical equipment. Remove excess lubrication. Clean plumbing fixtures to a sanitary condition. Clean light fixtures and lamps.

F. Clean the site of rubbish, litter and other foreign substances. Sweep paved areas; remove stains, spills and other foreign deposits. Rake grounds that are neither paved nor planted to a smooth even-textured surface.

1.11 REMOVAL OF PROTECTION: Remove temporary protection and facilities.

1.12 CLOSE OUT DOCUMENTATON:

A. All close out documents shall be provided in hard copy and identical electronic copy.
B. Contractor shall provide (2) hard copies for all documents and as built plans.
C. Contractor shall provide (4) electronic copies identical to hard copies as listed above.

a. Contractor shall utilize “thumb drive” media of sufficient size to accommodate entire close out package including all as built documents being saved onto (1) thumb drive encompassing (1) full copy of all documentation on that (1) drive.
b. Each successive copy of electronic documents shall be identical and complete.

D. In addition to close out documentation, all spare parts or extra parts required by specification shall be provided at final close out. The method for this to occur is negotiable but final verification including transmittal and owner/architect verification of receipt is a close out requirement.

E. Contractor MAY NOT deliver close out documents in multiple phases or at multiple times or to multiple parties.
a. Initial submittal of Close out documents shall be to the architect for review and comment.
b. Upon architect acceptance, the contractor shall gather all hard copies and electronic copies for a full and complete documentation deliverable for the project close out documentation.
c. In addition to items listed in various parts of the specifications, THE CONTRACTOR SHALL ALSO PROVIDE A COMPREHENSIVE SPREADSHEET THAT LISTS THE NAME AND CONTACT PERSON WITH PHONE NUMBER AND EMAIL FOR EACH SUBCONTRACTOR THAT PERFROMED WORK ON THE PROJECT.
d. The spreadsheet shall also include the term of any warranty provided by the subcontractor, the date the warranty started, and the end date the warranty will be completed on.
e. The spreadsheet shall also list any manufacturers extended warranties that may exist for any item under a particular subcontractor’s scope. Include the same information listed in item d. above for manufacturer’s warranties.

F. Once the contractor has gathered a complete project close out deliverable including both hard copies and electronic copies, warranties, extra parts and any other close out required items, they are to notify the architect that they are ready to schedule the project close out meeting.
a. A list of the attendees with signatures and contact numbers shall be created and all attendees shall be noted and shall sign in.
b. The project close out meeting shall consist of a meeting with all stakeholders including but not limited to;
i. BDS Facilities
ii. BDS Maintenance
iii. BDS administration for subject project facility
iv. Architect, other design consultants as directed by the architect
v. Contractor project management team and project executive
c. The project close out meeting agenda shall include a recap of the project scope, presentation of a completed and architect approved final punch list.
d. Contractor shall deliver close out documents with transmittal to architect and owner.
e. Architect is to accept close out documents and certify they are complete per previous reviews.
f. Architect shall sign transmittal accepting final close out documentation and attesting it is complete.
g. Question and answers will be called for all participants. Any necessary follow up meetings for any lingering items associated with the project will be scheduled and coordination responsibility for each item will be assigned.
h. Contractor will provide meeting minutes for the meeting including action items list and schedule for completion of any action items noted during the project close out meeting

1.13 COMPLIANCE: Comply with regulations of authorities having jurisdiction and safety standards for cleaning. Remove waste materials from the site and dispose of in a lawful manner.

END OF SECTION 017700

THIS PAGE INTENTIONALLY LEFT BLANK

SECTION 01 74 00 - WARRANTIES AND BONDS

PART 1 - GENERAL

REQUIREMENTS:

A. Preparation and submittal of warranties and bonds.

B. Schedule of submittals.

RELATED REQUIREMENTS:

A. Section of 01 70 00 - Contract Closeout

B. Individual Specifications Sections: Warranties and bonds required for specific Products or work.

FORM OF SUBMITTALS:

Bind with operation and maintenance manuals specified in Section 01 73 00.

PREPARATION OF SUBMITTALS:

A. Obtain warranties and bonds, executed in triplicate (3) by responsible subcontractors, suppliers, and manufacturer's within ten days after completion of the applicable item of work. Except for items put into use with Owner's permission, leave date of beginning of time of warranty until the Date of Substantial completion is determined.

B. Verify that documents are in proper form, contain full information, and are notarized.

C. Co-execute submittals when required.

D. Retain warranties and bonds until time specified for submittal.

TIME OF SUBMITTALS:

A. For equipment or component parts of equipment put into service during construction with Owner's permission, submit documents within ten days after acceptance.

B. For items of Work when acceptance is delayed beyond Date of Substantial Completion, submit within ten days after acceptance, listing the date of acceptance as the beginning of the warranty period.

PART 2 - PRODUCTS

Not used.

PART 3 - EXECUTION

WARRANTY SERVICE

A. The Contractor shall proceed with warranty repair or replacement within 24 hours of being notified that a warranty deficiency exists.

B. In order to insure prompt and effective correction of warranty deficiencies, the Contractor shall, if he or any of his Subcontractors do not maintain fully staffed service organizations within Leon County, designate firms within Leon County authorized to perform warranty work on the Contractor's behalf. The name, addresses, and

phone numbers of these designated firms shall be included within the closeout documents, along with affidavits signed by officers of the designated firms stating that they have been retained and will perform required warranty service.

END OF SECTION 01 74 00

SECTION 01 73 00 - OPERATION AND MAINTENANCE DATA

PART 1 - GENERAL

REQUIREMENTS:

A. Format and content of manuals.

B. Instruction of Owner's personnel.

C. Schedule of submittals.

RELATED REQUIREMENTS:

A. Shop Drawings, Product Data, and Samples.

B. Testing, Adjusting, and Balancing of Systems: Test and balance reports.

C. Section 01 70 00 - Contract Closeout

D. Warranties and Bonds

E. Individual Specification Sections: Specific requirements for operation and maintenance data.

FORMAT:

A. Prepare data in the form of an instructional manual.

B. Electronic Format on DVD

C. Cover: Identify each binder with typed or printed title OPERATION AND MAINTENANCE INSTRUCTIONS; list title of Project; use volumes as needed.

D. Arrange content by systems, process flow, under section numbers and sequence of Table of Contents of this Project Manual.

E. Provide tabbed fly leaf for each separate project and system, with typed description of product and major component parts of equipment.

F. Text: Manufacturer's printed data, or typewritten data.pdf format on DVD

G. Drawings: Electronic on DVD

CONTENTS OF EACH VOLUME:

A. Table of Contents: Provide title of Project; names, addresses, and telephone numbers of Architect/Engineer and Contractor with name of responsible parties; schedule of products and systems, indexed to content of the volume.

B. For Each Product or System: List names, addresses and telephone numbers of subcontractors and suppliers, including local source of supplies and replacement parts.

C. Product Data: Mark each sheet to clearly identify specific products and component parts, and data applicable to installation; delete inapplicable information.

D. Drawings: Supplement product data to illustrate relations of component parts of equipment and systems, to

show control and flow diagrams. Do not use Project Record Documents as maintenance drawings.

E. Warranties and Bonds: Bind in copy of each.

MANUAL FOR MATERIALS AND FINISHES:

A. Building Products, Applied Materials, and Finishes: Include product data, with catalog number, size, composition, color and texture designations. provide information for re-ordering custom manufactured products.

B. Instructions for Care and Maintenance: Include manufacturer's recommendations for cleaning agents and methods, precautions against detrimental agents and methods, and recommended schedule for cleaning and maintenance.

C. Moisture-protection and Weather-exposed Products: Include product data listing applicable reference standards, chemical composition, and details of installation; delete inapplicable information.

D. Drawings: Supplement product data to illustrate relations of component parts of equipment and systems, to show control and flow diagrams. Do not use Project Record Documents as maintenance drawings.

E. Warranties and Bonds: Bind in copy of each.

MANUAL FOR MATERIALS AND FINISHES:

A. Building Products, Applied Materials, and Finishes: Include product data, with catalog number, size, composition, and color and texture designations. Provide information for re-ordering custom manufactured products.

B. Instructions for Care and Maintenance: Include manufacturer's recommendations for cleaning agents and methods, precautions against detrimental agents and methods, and recommended schedule for cleaning and maintenance.

C. Moisture-protection and Weather-exposed Products: Include product data listing applicable reference standards, chemical composition, and details of installation. Provide recommendations for inspections, maintenance, and repair.

D. Additional Requirements: As specified in individual Specifications sections.

MANUAL FOR EQUIPMENT AND SYSTEMS:

A. Each Item of Equipment and Each System: Include description of unit or system, and component parts. Give function, normal operating characteristics, and limiting conditions. Include performance curves, with engineering data and tests, and complete nomenclature and commercial number or replaceable parts.

B. Panelboard Circuit Directories: Provide electrical service characteristics, controls, and communications.

C. Include as-installed color coded wiring diagrams.

D. Operating Procedures: include start-up, break-in, and routine normal operating instructions and sequences. Include regulation, control, stopping, shut-down, and emergency instructions. Include summer, winter, and any special operating instructions.

E. Maintenance Requirements: Include routine procedures and guide for trouble-shooting; disassembly, repair, and reassembly instructions; and alignment, adjusting, balancing, and checking instructions.

F. provide servicing and lubrication schedule, and list of lubricants required.

G. Include manufacturer's printed operations and maintenance instructions.

H. Include sequence of operation by controls manufacturer.

I. Provide original manufacturer's parts list, illustrations, assembly drawings, and diagrams required for maintenance.

J. Provide as-installed control diagrams by controls manufacturer.

K. Provide Contractor's coordination drawings, with as-installed color coded piping diagrams.

L. Provide charts of valve tag numbers, with location and function of each valve, keyed to flow and control diagrams.

M. Provide list of original manufacturer's spare parts, current prices, and recommended quantities to be maintained in storage.

N. Include test and balancing reports as specified.

O. Additional Requirements: As specified individual specifications sections.

P. Provide a listing in Table of Contents for design data, with tabbed fly sheet and space for insertion of data.

INSTRUCTION OF OWNER PERSONNEL:

A. Before final inspection, instruct Owner's designated personnel in operation, adjustment, and maintenance of products, equipment, and systems, at agreed upon times.

B. Use operation and maintenance manuals as basis of instruction. Review contents of manual with personnel in detail to explain all aspects of operation and maintenance.

C. Prepare and insert additional data in Operation and Maintenance Manual when need for such data become apparent during instruction.

SUBMITTALS:

A. Submit one (1) copy of completed volumes in final form 15 days prior to final inspection. Copy will be returned after final inspection, with Architect/Engineer comments. Revise content of documents as required prior to final submittal.

B. Submit three (3) copies of revised volumes of data in final form within ten days after final inspection.

PART 2 - PRODUCTS

Not used.

PART 3 - EXECUTION

Not used.

END OF SECTION 01 73 00

THIS PAGE LEFT INTENTIONALLY BLANK

SECTION 017839 - PROJECT RECORD DOCUMENTS

PART 1 - GENERAL

1.1 SUMMARY

A. Section includes administrative and procedural requirements for Project Record Documents, including the following:

1. Record Drawings.
2. Record specifications.
3. Record Product Data.

B. Related Requirements:

1. Section 017823 "Operation and Maintenance Data" for operation and maintenance manual requirements.

1.2 CLOSEOUT SUBMITTALS

A. Record Drawings: Comply with the following:

1) Submit PDF electronic files of scanned Record Prints.

2. Final Submittal:

1) Submit Record Digital Data Files.

B. Record Product Data: Submit **annotated PDF electronic files and directories** of each submittal.

1. Where record Product Data are required as part of operation and maintenance manuals, submit duplicate marked-up Product Data as a component of manual.

1.3 RECORD DRAWINGS

A. Record Prints: Maintain one set of marked-up paper copies of the Contract Drawings and Shop Drawings, incorporating new and revised drawings as modifications are issued.

1. Preparation: Mark record prints to show the actual installation, where installation varies from that shown originally. Require individual or entity who obtained record data, whether individual or entity is Installer, subcontractor, or similar entity, to provide information for preparation of corresponding marked-up record prints.

1. Give particular attention to information on concealed elements that would be difficult to identify or measure and record later.
2. Accurately record information in an acceptable drawing technique.
3. Record data as soon as possible after obtaining it.
4. Record and check the markup before enclosing concealed installations.
5. Cross-reference record prints to corresponding photographic documentation.

2. Content: Types of items requiring marking include, but are not limited to, the following:

1. Dimensional changes to Drawings.
2. Revisions to details shown on Drawings.
3. Depths of foundations.
4. Locations and depths of underground utilities.
5. Revisions to routing of piping and conduits.
6. Revisions to electrical circuitry.
7. Actual equipment locations.
8. Duct size and routing.
9. Locations of concealed internal utilities.
10. Changes made by Change Order or **Construction Work** Change Directive.
11. Changes made following Architect's written orders.
12. Details not on the original Contract Drawings.
13. Field records for variable and concealed conditions.
14. Record information on the Work that is shown only schematically.

3. Mark the Contract Drawings and Shop Drawings completely and accurately. Use personnel proficient at recording graphic information in production of marked-up record prints.
4. Mark record prints with erasable, red-colored pencil. Use other colors to distinguish between changes for different categories of the Work at same location.
5. Mark important additional information that was either shown schematically or omitted from original Drawings.
6. Note Construction Change Directive numbers, alternate numbers, Change Order numbers, and similar identification, where applicable.

B. Record Digital Data Files: Immediately before inspection for Certificate of Substantial Completion, review marked-up record prints with Architect. When authorized, prepare a full set of corrected digital data files of the Contract Drawings, as follows:
1. Format: Annotated PDF electronic file **with comment function enabled**.
2. Incorporate changes and additional information previously marked on record prints. Delete, redraw, and add details and notations where applicable.
3. Architect will furnish Contractor with one set of digital data files of the Contract Drawings for use in recording information.

C. Format: Identify and date each Record Drawing; include the designation "PROJECT RECORD DRAWING" in a prominent location.

1. Record Prints: Organize record prints into manageable sets. Bind each set with durable paper cover sheets. Include identification on cover sheets.
2. Format: Annotated PDF electronic file **with comment function enabled**.
3. Record Digital Data Files: Organize digital data information into separate electronic files that correspond to each sheet of the Contract Drawings. Name each file with the sheet identification. Include identification in each digital data file.
4. Identification: As follows:

1. Project name.
2. Date.
3. Designation "PROJECT RECORD DRAWINGS."
4. Name of Architect
5. Name of General Contractor and Trade Contractor.
6. Name of Contractor.

1.4 RECORD PRODUCT DATA

A. Recording: Maintain one copy of each submittal during the construction period for Project Record Document purposes. Post changes and revisions to Project Record Documents as they occur; do not wait until end of Project.

B. Preparation: Mark Product Data to indicate the actual product installation where installation varies substantially from that indicated in Product Data submittal.

1. Give particular attention to information on concealed products and installations that cannot be readily identified and recorded later.
2. Include significant changes in the product delivered to Project site and changes in manufacturer's written instructions for installation.

C. Format: Submit Record Product Data as **annotated PDF electronic file** or **scanned PDF electronic file(s) of marked-up paper copy of Product Data**.

1. Include Record Product Data directory organized by Specification Section number and title, electronically linked to each item of Record Product Data.

1.5 MAINTENANCE OF RECORD DOCUMENTS

A. Maintenance of Record Documents: Store Record Documents in the field office apart from the Contract Documents used for construction. Do not use Project Record Documents for construction purposes. Maintain Record Documents in good order and in a clean, dry, legible condition, protected from deterioration and loss. Provide access to Project Record Documents for Architect's reference during normal working hours.

PART 2 - PRODUCTS (Not Used)

PART 3 - EXECUTION (Not Used)

END OF SECTION 017839

THIS PAGE LEFT INTENTIONALLY BLANK

SECTION 01 79 00 **-** DEMONSTRATION AND TRAINING

PART 1 - GENERAL

1.1 SUMMARY

A. This Section includes administrative and procedural requirements for instructing Owner's personnel, including the following:

1. Demonstration of operation of systems, subsystems, and equipment.
2. Training in operation and maintenance of systems, subsystems, and equipment.

B. See Divisions 02 through 49 Sections for specific requirements for demonstration and training for products in those Sections.

PART 2 - PRODUCTS

2.1 INSTRUCTION PROGRAM

A. Program Structure: Develop an instruction program that includes individual training for each system and equipment not part of a system, as required by individual Specification Sections, and as follows:

B. Training Modules: For each module, include instruction for the following:

1. Basis of System Design, Operational Requirements, and Criteria: Include system and equipment descriptions, operating standards, regulatory requirements, equipment function, operating characteristics, limiting conditions, and performance curves.
2. Documentation: Review emergency, operations, and maintenance manuals; Project Record Documents; identification systems; warranties and bonds; and maintenance service agreements.
3. Emergencies: Include instructions on stopping; shutdown instructions; operating instructions for conditions outside normal operating limits; instructions on meaning of warnings, trouble indications, and error messages; and required sequences for electric or electronic systems.
4. Operations: Include startup, break-in, control, and safety procedures; stopping and normal shutdown instructions; routine, normal, seasonal, and weekend operating instructions; operating procedures for emergencies and equipment failure; and required sequences for electric or electronic systems.
5. Adjustments: Include alignments and checking, noise, vibration, economy, and efficiency adjustments.
6. Troubleshooting: Include diagnostic instructions and test and inspection procedures.
7. Maintenance: Include inspection procedures, types of cleaning agents, methods of cleaning, procedures for preventive and routine maintenance, and instruction on use of special tools.
8. Repairs: Include diagnosis, repair, and disassembly instructions; instructions for identifying parts; and review of spare parts needed for operation and maintenance.

PART 3 - EXECUTION

3.1 INSTRUCTION

A. Engage qualified instructors to instruct Owner's personnel to adjust, operate, and maintain systems, subsystems, and equipment not part of a system.

B. Scheduling: Provide instruction at mutually agreed on times. For equipment that requires seasonal operation, provide similar instruction at start of each season.

1. Schedule training with Owner with at least seven days' advance notice.

END OF SECTION 01 79 00

SECTION 02 32 00
SUBSURFACE INVESTIGATION

1. GENERAL

1.1 INVESTIGATION

A. A geotechnical investigation was conducted at the project site. The results of the investigation are contained in a report by:

NOVA
17612 Ashley Drive
Panama City Beach, Florida 32413

B. A copy of the report is contained herein and is appended as part of this section. The report may not contain copies of boring logs, test analysis, etc. Copies of information not contained herein may be obtained from the Geotechnical Engineer and are appended to this section as though included.

C. The Contractor shall examine the report and may make additional borings or investigation as necessary.

1.2 INTERPRETATION

A. Soil borings are representative of subsurface conditions at their respective locations. Local variations are anticipated and should be expected. Data is not intended as representations or warranties of accuracy or continuity between soil borings. It is expressly understood that Owner will not be responsible for interpretations or conclusions drawn therefrom by Contractor. Data is made available for convenience of Contractor. Variations shall not be taken as a basis for claim.

B. The soils report may contain language which utilizes verbiage such as "recommend" or "should". Such terminology contained within the report shall be interpreted by the Contractor as binding requirements of the Construction Documents unless specifically voided by the Owner or an authorized Agent of the Owner in writing. Discrepancies, either imagined or real, between the Geotechnical Report and Contract Documents shall be brought to the attention of the Engineer for clarification. When discrepancies exist between selection of materials, execution, measurements, etc., the more stringent condition shall control unless directed otherwise by the Engineer.

END OF SECTION 02 32 00

THIS PAGE LEFT INTENTIONALLY BLANK

SECTION 023201 - GEOTECHNICAL DATA / INVESTIGATION REPORT

1.1 GEOTECHNICAL DATA

A. This Document with its referenced attachments is part of the Procurement and Contracting Requirements for Project. They provide Owner's information for Bidders' convenience and are intended to supplement rather than serve in lieu of Bidders' own investigations. They are made available for Bidders' convenience and information. This Document and its attachments are not part of the Contract Documents.

B. Because subsurface conditions indicated by the soil borings are a sampling in relation to the entire construction area, and for other reasons, the Owner, the Architect, the Architect's consultants, and the firm reporting the subsurface conditions do not warranty the conditions below the depths of the borings or that the strata logged from the borings are necessarily typical of the entire site. Any party using the information described in the soil borings and geotechnical report shall accept full responsibility for its use.

C. Attached is the geotechnical investigation report for this project, prepared by NOVA Engineering, dated July 23, 2025. .

END OF DOCUMENT 023201

This Page Intentionally Left Blank

GEOTECHNICAL ENGINEERING REPORT



GCSC Nursing Simulation Building

Panama City, Bay County, Florida

PREPARED FOR:

Mr. Jason Parker
5230 West Highway 98
Panama City, Florida 32413

NOVA Project Number: 10111-2025047

July 23, 2025

NOVA

PROFESSIONAL | PRACTICAL | PROVEN

July 23, 2025

Mr. Jason Parker
5230 West Highway 98
Panama City, Florida 32413

Subject: **Geotechnical Engineering Report**
GCSC Nursing Simulation Building
Panama City, Bay County, Florida
NOVA Project Number 10111-2025047

Dear Mr. Parker:

NOVA Engineering and Environmental, LLC (NOVA) has completed the authorized Geotechnical Engineering Report for the Nursing Simulation Building proposed within the Gulf Coast State College (GCSC) campus located in Panama City, Bay County, Florida. The work was performed in general accordance with NOVA Proposal Number 10111-2025047, dated May 14th, 2025. This report briefly discusses our understanding of the project at the time of the subsurface exploration, describes the geotechnical consulting services provided by NOVA, and presents our findings, conclusions, and recommendations.

We appreciate your selection of NOVA and the opportunity to be of service on this project. If you have any questions, or if we may be of further assistance, please do not hesitate to contact us.

Sincerely,
NOVA Engineering and Environmental, LLC

Chris V. Alessio, E.I.
Staff Engineer'



William L. Lawrence, P.E.
Senior Regional Engineer
Florida Registration No. 60147

Copies Submitted: Addressee (electronic)

TABLE OF CONTENTS

1.0 INTRODUCTION 1
1.1 NAME AND LOCATION OF PROJECT 1
1.2 AUTHORIZATION AND SCOPE OF STUDY 1
2.0 PROJECT INFORMATION 2
2.1 PROJECT SITE 2
2.2 PROPOSED DEVELOPMENT 2
3.0 SUBSURFACE EXPLORATION 3
3.1 AREA GEOLOGY 3
3.2 LOCAL EXPERIENCE 3
3.3 FIELD EXPLORATION 3
3.4 LABORATORY TESTING 4
3.5 SUBSURFACE CONDITIONS 5
4.0 GEOTECHNICAL ASSESSMENT 7
5.0 RECOMMENDATIONS 8
5.1 SITE PREPERATION 8
5.2 EXCAVATION 8
5.3 FILL PLACEMENT 9
5.4 SHALLOW FOUNDATION SYSTEM 10

APPENDICES

Appendix A – Figures and Maps
Appendix B – Subsurface Data
Appendix C – Laboratory Test Data

1.0 INTRODUCTION

This section provides information relating to our contract, the purpose of our work, and a summary of our understanding of the project,

1.1 NAME AND LOCATION OF PROJECT

The Subject Property (Bay County Parcel ID Number 27927-000-000) is located within the GCSC campus at 5230 Highway 98 in Panama City, Bay County, Florida. The proposed Nursing Simulation Building will be located about 200 feet east of the campus library building. The location of the site is indicated on the Site Location Map included in Appendix A.

1.2 AUTHORIZATION AND SCOPE OF STUDY

Our work on this project was as described in our Proposal Number 10111-2025047, dated May 14th, 2025. The authorized geotechnical engineering services included a site reconnaissance, soil test borings and sampling, engineering evaluation of the field and laboratory data, and the preparation of this report. As authorized per the above-mentioned proposal, this completed geotechnical report includes:

- A description of the site, fieldwork, laboratory testing and general soil conditions encountered, together with a Boring Location Plan and Test Boring Records.
- Site preparation considerations that include geotechnical discussions regarding site stripping and subgrade preparation and engineered fill/backfill placement.
- Slab-on-grade construction considerations based on the geotechnical findings, including the need for a sub-slab vapor barrier or a capillary barrier.
- Suitability of on-site soils for re-use as structural fill and backfill. Additionally, the criteria for suitable fill materials are provided.
- The measured apparent and estimated normal permanent seasonal high and low groundwater levels at the boring locations.
- Recommendations for controlling groundwater and/or run-off during construction.
- Recommended quality control measures (i.e., sampling, testing, and inspection requirements) for site grading and foundation construction.

The assessment of the presence of wetlands, floodplains, or water classified as state waters was beyond the scope of this exploration. Additionally, the assessment of site environmental conditions, including the detection of pollutants in the soil, rock, or groundwater, at the site was also beyond the scope of this geotechnical exploration and evaluation.

2.0 PROJECT INFORMATION

Our understanding of this project is based on discussions with the Design Team (DAG Architects, INC.), a site reconnaissance made during boring layout, and our experience with similar projects in this locale.

Site Plans and Documents

We were furnished with the following document:

- **Title**: Schematic Presentation 4-1-25
  Published by: DAG Architects, INC.
  Dated: February 26th, 2025

2.1 PROJECT SITE

The Subject Property (Bay County Parcel ID Number 27927-000-000) is located within the Gulf Coast State College (GCSC) campus at 5230 Highway 98 in Panama City, Bay County, Florida. At the time of our field exploration, the vicinity of the campus was observed to be surrounded by Grand Lagoon to the north and west, single family residential structures to the east, and U.S. Highway 98 to the south.

2.2 PROPOSED DEVELOPMENT

NOVA understands the project will include the demolition of an existing structure followed by the construction of a new two-story, slab-on-grade nursing simulation building to be supported by a conventional shallow foundation system.

Maximium Loads

Final structural loading details were not available from the Design Team at the time of the issuance of this report. We have therefore assumed that maximum loadings for the proposed structure will not exceed 50 kips per column for isolated interior columns and 4 kips per linear foot for continuous load bearing walls.

Site Grading

Final site grading details were not available from the Design Team at the time of the issuance of this report. We have therefore assumed that finished site grades will not change greater than +/- 3 feet from existing grades within the proposed structure footprint.

3.0 SUBSURFACE EXPLORATION

3.1 AREA GEOLOGY

According to the United States Geological Survey (USGS), the subject site is located in Bay County within the Gulf Coastal Plain, separated from the Florida Platform by geologic structures known as the Gulf Trough and Apalachicola Embayment. These structures formed a bathymetric and environmental barrier from the earliest Eocene or earliest Oligocene periods into the Miocene. According to the "Text to Accompany the Geologic Map of Florida" by Scott, 2001, the site is generally underlain by undifferentiated sediments deposited during the Quaternary period. These sediments typically consist of siliciclastics (sand), organics and freshwater carbonates. These soils are highly permeable and form the Sand and Gravel Aquifer of the surficial aquifer system. Surficial soils in the region are primarily siliciclastic sediments deposited in response to the renewed uplift and erosion in the Appalachian highlands to the north and sea-level fluctuations. The extent and type of deposit is influenced by numerous factors, including mineral composition of the parent rock and meteorological events.

3.2 LOCAL EXPERIENCE

NOVA has conducted numerous geotechnical studies for projects in the general site area including within the Panama City area. The typical subsurface conditions in this area were found to consist of fine-grained sands to silty sands with moderate to very high organic contents (USCS classifications of SP, SP-SM, and SM), as well as intermittent strata/seams of soft clay and/or peat (CL, PT) that are generally highly variable with respect to depth encountered as well as thickness.

3.3 FIELD EXPLORATION

Our field exploration was conducted on May 21st, 2025, and included performing:

- Two 50-foot-deep SPT borings (designated B-1 and B-2 in the attached Appendix) and two 30-foot-deep SPT borings (B-3 and B-4) as close as possible to Design Team designated boring locations within the proposed structure footprint.

The boring locations were established in the field by NOVA personnel using a handheld GPS device and by estimating distances and angles from site landmarks. Prior to initiating field testing, underground utilities were marked by the state utility locate service (811, or Sunshine One-Call). Any required underground utility related adjustments of the boring and test locations were then made at the time of the field exploration. The approximate test locations are shown in the Boring Location Plan provided in Appendix B. If increased accuracy is desired by the Client, test locations and elevations may be surveyed.

The Test Boring Records in Appendix B show the Standard Penetration Test (SPT) resistances, or "N-values", and present the soil conditions encountered in the borings. These records represent our interpretation of the subsurface conditions based on the field exploration data, visual examination of the split-barrel samples, laboratory test data, and generally accepted geotechnical engineering practices. The stratification lines and depth designations represent approximate boundaries between various subsurface strata. Actual transitions between materials may be gradual.

The groundwater levels reported on the Test Boring Records represent measurements made at the completion of each test boring, following a suitable stabilization period. The test borings were subsequently backfilled with soil cuttings from the drilling process for safety concerns.

SPT Borings

The Standard Penetration Test (SPT) borings were performed using the guidelines of ASTM Designation D-1586, "Penetration Test and Split-Barrel Sampling of Soils". A mud rotary drilling process was used to advance the borings once groundwater was encountered. At regular intervals, soil samples were obtained with a standard 1.4-inch I.D., 2.0-inch O.D., split-tube sampler. The sampler was first seated six inches and then driven an additional foot with blows of a 140-pound hammer falling 30 inches. The number of hammer blows required to drive the sampler the final foot is designated the "Penetration Resistance". Representative portions of the soil samples, obtained from the sampler, were placed in sealed containers and transported to our laboratory for further evaluation and laboratory testing.

3.4 LABORATORY TESTING

Following completion of the field work, soil samples obtained in the field were returned to our office for classification and laboratory testing assignment. These tests included the following:

- Moisture Content
- Fines Content
- Organic Content

The purpose of the testing program was to classify the subsurface materials relative to the Unified Classification System and to determine their physical characteristics including strength, and compressibility. Laboratory data is provided in Appendix C.

Moisture Content

The moisture content is the ratio expressed as a percentage of the weight of water in a given mass of soil to the weight of the solid particles. This testing was conducted in general accordance with ASTM Designation D-2216. Four moisture content tests were performed in this study.

Fines Content

The percentage of fines passing through the No. 200 sieve is generally considered to represent the amount of silt and clay of the tested soil sample. The sieve analysis testing was conducted in general accordance with ASTM Designations D-6913 and D-1140. Four fines content tests were performed in this study.

Organic Content

The organic content is the ratio expressed as a percentage of the weight of organic material in a given mass of soil to the weight of the solid particles. This testing was conducted in general accordance with ASTM D-2974. Four organic content tests were performed in this study.

3.5 SUBSURFACE CONDITIONS

The following paragraphs provide generalized descriptions of the subsurface profiles and soil conditions encountered by the borings conducted during this exploration.

Surface Materials

Surface materials across the subject site generally consisted of short grasses, organics and topsoil, generally on the order of 2 inches or less in thickness.

Native Subgrade Soils

Below topsoil, the soil borings generally encountered loose to dense fine sands and slightly silty fine sands (USCS classifications of SP and SP-SM) to the maximum depth explored of about 50 feet below existing grade (BEG).

Standard Penetration Test (SPT) resistance values (“N”- values) varied from 6 to 41 blows per foot (bpf) and were found to generally be variable with depth. SPT values typically ranged from 6 to 15 bpf in the upper 10 feet of the soil horizon, and 12 to 41 bpf at greater depths.

Groundwater Conditions

Groundwater in the Bay County, Florida area typically occurs as an unconfined aquifer condition. Consequently, the groundwater table is expected to be a subdued replica of the original surface topography. Recharge is provided by the infiltration of rainfall and surface water through the soil overburden. More permeable zones in the soil matrix can affect groundwater conditions.

A stabilized groundwater table was encountered in the test borings at a uniform depth of roughly 3 feet BEG at the time of field exploration, which occurred during a period of relatively normal seasonal rainfall and within a pattern of frequent (daily) rain events.

Groundwater levels vary with changes in season and rainfall, construction activity, surface water runoff, tidal influences and other site-specific factors. Groundwater levels in the Bay County area are typically lowest in the late fall to winter and highest in the early spring to mid-summer with annual groundwater fluctuations by seasonal rainfall; consequently, the water table may vary at times.

Based on comparisons of current annual monthly rainfall data to historical rainfall data extending back 50+ years in time, we estimate that the normal permanent seasonal high groundwater (SHGW) table for this site will occur within about 1 foot above the groundwater levels measured at each boring location at the time of our exploration, during the wet season. This data generally correlates to the values provided by the USGS Natural Resources Conservation Service (NRCS).

The table below shows the following information for each soil test boring: general soil type encountered, the encountered groundwater table and the estimated seasonal high groundwater level.

Test Boring	Soil Type	Encountered Groundwater Depth (BEG)*	Estimated SLGW Depth (BEG)*	Estimated SHGW Depth (BEG)*
B-1	Fine-Grained Sand	3 feet	4 feet	2 feet
B-2	Fine-Grained Sand	3 feet	4 feet	2 feet
B-3	Fine-Grained Sand	3 feet	4 feet	2 feet
B-4	Fine-Grained Sand	3 feet	4 feet	2 feet

* Below Existing Grade

4.0 GEOTECHNICAL ASSESSMENT

The following assessment is based on our understanding of the proposed construction, our site observations, our evaluation and interpretation of the field data obtained during this exploration, our experience with similar subsurface conditions, and generally accepted geotechnical engineering principles and practices.

Based on boring data and analysis, the encountered subsurface conditions appear to be adaptable for supporting the proposed structure on a shallow foundation system. On-site near surface soils that are categorized as fine sands and slightly silty fine sands (SP and SP-SM based on the Unified Soil Classification System, or USCS) should be suitable for reuse as structural fill or backfill.

Subsurface conditions in unexplored locations can and will vary from those encountered at the boring locations considered and discussed herein. If such variations are noted during construction, or if project development plans are changed, we request the opportunity to review the changes and amend our recommendations, if necessary.

The following sections present our recommendations for site preparation and grading, and for the design of the proposed shallow foundation system.

5.0 RECOMMENDATIONS

5.1 SITE PREPERATION

Prior to proceeding with construction, all topsoil and vegetation, trees and associated root systems, and any other deleterious non-soil materials found to be present (including the existing structure and associated substructures scheduled for demolition) should be stripped from the proposed building footprint. Clean topsoil may be stockpiled and subsequently re-used in landscaped areas. Debris-laden materials should be excavated, transported, and disposed of off-site in accordance with appropriate solid waste rules and regulations. Any existing utility locations should be reviewed to assess their impact on the proposed construction and relocated/grouted in-place as appropriate.

The soils exposed at the stripped grade elevation should be compacted via non-vibratory methods (due to the presence of nearby structures on abutting properties) to a minimum soil density of at least 98 percent of the maximum dry density as determined by the Modified Proctor test method (ASTM D-1557).

NOVA should observe the compaction of the subgrade to locate soft, weak, or excessively wet fill or existing soils present at the time of construction. Any unstable materials observed during the evaluation and compaction operations should be undercut and replaced with structural fill or stabilized in-place by scarifying and re-densifying. Actual remedial recommendations can best be determined by the geotechnical engineer in the field at the time of construction.

5.2 EXCAVATION

Excavations greater than five feet deep (such as for underground utility installations) should be sloped or shored in accordance with local, state, and federal regulations, including OSHA (29CFR Part 1926), excavation safety standards. We note that the Contractor is solely responsible for site safety. This information is provided only as a service and under no circumstances should NOVA be assumed to be responsible for construction site safety. Each excavation should be observed and classified by an OSHA-competent person. All excavations below the groundwater level are classified as OSHA Class C soils for excavation purposes.

After stripping and trench excavation, a NOVA geotechnical engineer should carefully evaluate the exposed soils. We recommend undercutting the proposed pipe trench areas approximately ½ foot below the proposed pipe bearing elevations and installing structural backfill for use as pipe bedding materials. Sewer pipe installation should be constructed in general compliance with ASTM D2321, standard practice for underground installation of pipe for sewers and other gravity flow applications.

Groundwater Control

As was noted previously, groundwater was encountered in the test borings at a uniform depth of approximately 3 feet BEG at the time of our field exploration. We do not anticipate that significant groundwater control issues will develop during mass grading and foundation construction. However, depending on fill heights within the proposed structure footprint localized dewatering efforts may prove necessary to properly install subsurface utilities servicing the structure.

5.3 FILL PLACEMENT

Fill Suitability

Fill materials should be relatively clean sands with less than 12 percent fines (material passing the No. 200 sieve), and free of non-soil materials and rock fragments larger than 3 inches in diameter. Based on visual examination and limited laboratory soil testing results, the existing surficial soils encountered during this exploration typically consisted of fine-grained sand (SP) that should be suitable for re-use as fill or backfill material (laboratory testing indicated that fines contents in the upper 6 feet of the soil horizon in the test boring were between 3 and 4 percent).

We recommend that stockpiles of all materials planned for re-use be sealed as they are excavated to prevent (to the greatest extent practical) the intrusion of moisture into the core of the soil stockpile(s) during significant rain events prior to their potential re-use as fill and/or backfill soils. Prior to construction, bulk samples of all proposed fill materials (both native and import) should be laboratory tested to confirm their suitability. Organic and/or debris-laden material is not suitable for re-use as structural fill. Topsoil, mulch, and similar organic materials can be wasted in architectural areas. Debris-laden materials should be excavated, transported, and disposed of off-site in accordance with appropriate solid waste rules and regulations.

Soil Compaction

Fill should be placed in thin, horizontal loose lifts (maximum 12-inch) and compacted via non-vibratory methods to a minimum soil density of at least 95 percent of the Modified Proctor maximum dry density (ASTM D-1557). In confined areas, such as utility trenches, portable compaction equipment and thinner fill lifts (3 to 4 inches) may be necessary.

Fill materials used in structural areas should have a target maximum dry density of at least 100 pounds per cubic foot (pcf). If lighter weight fill materials are used, the NOVA geotechnical engineer should be consulted to assess the impact on design recommendations.

Soil moisture content should be maintained within 3 percent of the optimum moisture content. We recommend that the grading contractor have equipment on site during earthwork for both drying and wetting fill soils. Moisture control may be difficult during rainy weather. Soils excavated from below the groundwater table will likely require significant efforts to achieve acceptable moisture contents prior to re-use as fill.

One test per 2,500 square feet of building footprint should be performed at the stripped grade elevation and in each lift of fill, with test locations well distributed throughout the fill mass. One test per column footing and one test at a frequency of every 50 lineal feet of continuous wall footing should also be specified. When filling in small areas, at least one test per day per area should be performed.

The site should be graded during construction to maintain positive drainage away from the proposed structure footprint, to prevent ponding of stormwater on the site during and shortly following significant rain events. The construction areas should be sealed and crowned with a smooth roller to minimize ponding water from storm events at the end of each day of work.

5.4 SHALLOW FOUNDATION SYSTEM

General: We understand that the proposed structure will be supported by a conventional shallow foundation system. Final structural loadings were not available from the Design Team at the time of the issuance of this report; we have therefore assumed that maximum isolated interior column and continuous load bearing wall loads will not exceed 50 kips per column and 4 kips per linear foot, respectively, for the proposed structure.

If any of the above stated design assumptions are found to be incorrect or are revised, NOVA should be contacted immediately so that additional analyses can be performed to determine if the recommendations presented herein will need to be modified.

Design: After the recommended site and subgrade preparation and fill placement has been completed, it is our opinion that a conventional shallow foundation system consisting of isolated spread footings and/or turn-down slab-on-grade construction can be used to support the proposed structure.

Foundations bearing on densified existing soils and/or compacted structural fill, as recommended in this report, may be designed employing a maximum allowable soil bearing pressure of **2,000 pounds per square foot (psf)**.

We recommend a value of 0.35 can be employed as the coefficient of friction (sliding resistance) between foundations and the underlying residual or fill soils. Footings should be a minimum of 24 inches in width for ease of construction and to reduce the

possibility of localized shear failures. Isolated exterior and interior footing bottoms should be established at least 16 inches below finished surrounding exterior grades. When utilizing a post-tensioned monolithic slab-on-grade design, exterior and interior footing bottoms should be established a minimum of 12 inches below adjacent finished grades.

Settlement: Settlements for a spread foundation bearing on improved subgrade were assessed using SPT values to estimate elastic modulus, based on published correlations and previous NOVA experience. We note that the settlements presented are based on the SPT boring results. Conditions may be better or worse in other areas; however, we believe the estimated settlements are reasonably conservative.

Based on the assumed structural loadings, the soil bearing capacity provided above, the presumed foundation elevations as discussed above, we expect residual primary total settlement beneath individual foundations to be on the order of 1-inch.

The amount of differential settlement is difficult to predict because the subsurface and foundation loading conditions can vary considerably across the site. However, we anticipate residual differential settlement between adjacent foundations will be less than ½ inch. The final deflected shape of each structure will be dependent on actual foundation locations and loading.

Foundation support conditions are highly erratic and may vary dramatically in short horizontal distances. It is anticipated that the geotechnical engineer may recommend a different bearing capacity upon examination of the actual foundation subgrade at numerous locations.

To reduce the differential settlement if lower consistency materials are encountered, a lower bearing capacity should be used. We anticipate that timely communication between the geotechnical engineer and the structural engineer, as well as other design and construction team members, will be required.

Construction: Foundation excavations should be evaluated by the NOVA geotechnical engineer prior to reinforcing steel placement to observe foundation subgrade preparation and confirm bearing pressure capacity. Foundation excavations should be level and free of debris, ponded water, mud, and loose, frozen, or water-softened soils. Concrete should be placed as soon as is practical after the foundation is excavated and the subgrade evaluated. Foundation concrete should not be placed on frozen or saturated soil. If a foundation excavation remains open overnight, or if rain or snow is imminent, a 3 to 4-inch thick "mud mat" of lean concrete should be placed in the bottom of the excavation to protect the bearing soils until reinforcing steel and concrete can be placed.

5.5 SLAB-ON-GRADE

General

The conditions exposed at subgrade levels will vary across the site and may include very loose areas that will need to be addressed as discussed herein. The slab-on-grade may be adequately supported on these subgrade conditions or properly placed structural fill subject to the recommendations in this report. The slab-on-grade should be jointed around columns and along walls to reduce cracking due to differential movement. An underdrain system is not necessary beneath the slab, provided that the slab is established at least 2 feet above the SHGW level.

Once grading is completed, the subgrade is usually exposed to adverse construction activities and weather conditions during the period of sub-slab utility installation. The subgrade should be well-drained to prevent the accumulation of water. If the exposed subgrade becomes saturated or frozen, the geotechnical engineer should be consulted.

After utilities have been installed and backfilled, a final subgrade evaluation should be performed by the geotechnical engineer immediately prior to the slab-on-grade placement. If practical, proofrolling may be used to redensify the surface and to detect any soil that has become excessively wet or otherwise loosened.

Subgrade Modulus

A coefficient of subgrade reaction (***k***) of 125 pci (psi per inch) may be used for conventional slab design where slabs bear upon subgrades prepared in accordance with previous recommendations.

Please note that this magnitude of ***k*** is intended to reflect the elastic response of soil beneath a typical floor slab under light loads with a small load contact area often measured in square inches, such as loads from forklifts, automobile/truck traffic or lightly loaded storage racks. The recommended coefficient of subgrade reaction (***k***) of 125 pci is not applicable for heavy slab loads caused by bulk storage or tall storage racks, or for mat foundation design.

Several design methods are applicable for conventional slab design. We have assumed that the slab designer will utilize the methods discussed in the American Concrete Institute (ACI) Committee 360 report, *"Guide to Design of Slabs-on-Ground, (ACI 360R-10)*.

APPENDIX A
Figures and Maps



Base map provided by ***Google Earth***

Scale: Not To Scale **Date Drawn:** May 23, 2025 **Drawn By:** C. Alessio **Checked By:** W. Lawrence	NOVA 17612 Ashley Drive Panama City Beach, Florida 32413 850.249.6682 ♦ 850.249.6683	**PROJECT LOCATION MAP** **GCSC Nursing Simulation Building** Panama City, Bay County, Florida *NOVA Project Number 10111-2025047*

APPENDIX B
Subsurface Data



LEGEND

50’ SPT Boring Locations (B-1 and B-2)

30’ SPT Boring Locations (B-3 and B-4)

Base map provided by **Google Earth**

Scale: Not To Scale	
Date Drawn: May 23, 2025	
Drawn By: C. Alessio	
Checked By: W. Lawrence	

NOVA

17612 Ashley Drive
Panama City Beach, Florida 32413
850.249.NOVA(6682) ♦ 850.249.6683

BORING LOCATION PLAN

GCSC Nursing Simulation Building

Panama City, Bay County, Florida

NOVA Project Number 10111-2025047

KEY TO BORING LOGS

SYMBOLS AND ABBREVIATIONS

SYMBOL	DESCRIPTION
N-Value	No. of Blows of a 140-lb. Weight Falling 30 Inches Required to Drive a Standard Spoon 1 Foot
WOR	Weight of Drill Rods
WOH	Weight of Drill Rods and Hammer
	Sample from Auger Cuttings
	Standard Penetration Test Sample
	Thin-wall Shelby Tube Sample (Undisturbed Sampler Used)
% REC	Percent Core Recovery from Rock Core Drilling
RQD	Rock Quality Designation
	Stabilized Groundwater Level
	Seasonal High Groundwater Level (also referred to as the W.S.W.T.)
NE	Not Encountered
GNE	Groundwater Not Encountered
BT	Boring Terminated
-200 (%)	Fines Content or % Passing No. 200 Sieve
MC (%)	Moisture Content
LL	Liquid Limit (Atterberg Limits Test)
PI	Plasticity Index (Atterberg Limits Test)
K	Coefficient of Permeability
Org. Cont.	Organic Content
G.S. Elevation	Ground Surface Elevation

UNIFIED SOIL CLASSIFICATION SYSTEM

MAJOR DIVISIONS			GROUP SYMBOLS	TYPICAL NAMES
COARSE-GRAINED SOILS More than 50% retained on the No. 200 sieve*	GRAVELS 50% or more of coarse fraction retained on No. 4 sieve	CLEAN GRAVELS	GW	Well-graded gravels and gravel-sand mixtures, little or no fines
			GP	Poorly graded gravels and gravel-sand mixtures, little or no fines
		GRAVELS WITH FINES	GM	Silty gravels and gravel-sand-silt mixtures
			GC	Clayey gravels and gravel-sand-clay mixtures
	SANDS More than 50% of coarse fraction passes No. 4 sieve	CLEAN SANDS 5% or less passing No. 200 sieve	SW**	Well-graded sands and gravelly sands, little or no fines
			SP**	Poorly graded sands and gravelly sands, little or no fines
		SANDS with 12% or more passing No. 200 sieve	SM**	Silty sands, sand-silt mixtures
			SC**	Clayey sands, sand-clay mixtures
FINE-GRAINED SOILS 50% or more passes the No. 200 sieve*	SILTS AND CLAYS Liquid limit 50% or less		ML	Inorganic silts, very fine sands, rock flour, silty or clayey fine sands
			CL	Inorganic clays of low to medium plasticity, gravelly clays, sandy clays, lean clays
			OL	Organic silts and organic silty clays of low plasticity
	SILTS AND CLAYS Liquid limit greater than 50%		MH	Inorganic silts, micaceous or diamicaceous fine sands or silts, elastic silts
			CH	Inorganic clays or clays of high plasticity, fat clays
			OH	Organic clays of medium to high plasticity
			PT	Peat, muck and other highly organic soils

*Based on the material passing the 3-inch (75 mm) sieve
** Use dual symbol (such as SP-SM and SP-SC) for soils with more than 5% but less than 12% passing the No. 200 sieve

RELATIVE DENSITY
(Sands and Gravels)
Very loose – Less than 4 Blow/Foot
Loose – 4 to 10 Blows/Foot
Medium Dense – 11 to 30 Blows/Foot
Dense – 31 to 50 Blows/Foot
Very Dense – More than 50 Blows/Foot

CONSISTENCY
(Silts and Clays)
Very Soft – Less than 2 Blows/Foot
Soft – 2 to 4 Blows/Foot
Medium Stiff – 5 to 8 Blows/Foot
Stiff – 9 to 15 Blows/Foot
Very Stiff – 16 to 30 Blows/Foot
Hard – More than 30 Blows/Foot

RELATIVE HARDNESS
(Limestone)
Soft – 100 Blows for more than 2 Inches
Hard – 100 Blows for less than 2 Inches

MODIFIERS

These modifiers Provide Our Estimate of the Amount of Minor Constituents (Silt or Clay Size Particles) in the Soil Sample
Trace – 5% or less
With Silt or With Clay – 6% to 11%
Silty or Clayey – 12% to 30%
Very Silty or Very Clayey – 31% to 50%

These Modifiers Provide Our Estimate of the Amount of Organic Components in the Soil Sample
Trace – Less than 3%
Few – 3% to 4%
Some – 5% to 8%
Many – Greater than 8%

These Modifiers Provide Our Estimate of the Amount of Other Components (Shell, Gravel, Etc.) in the Soil Sample
Trace – 5% or less
Few – 6% to 12%
Some – 13% to 30%
Many – 31% to 50%

NOVA

TEST BORING RECORD B-1

PROJECT NAME: GCSC Nursing Simulation Building **DATE:** 5/21/2025
PROJECT NO.: 2025047 **CLIENT:** Mr. Jason Parker
PROJECT LOCATION: Panama City, Bay County, Florida
LOCATION: See Boring Location Plan **ELEVATION:** Existing Grade
DRILLED BY: L. Wattson **LOGGED BY:** M. Keramidas
DRILLING METHOD: Mud Rotary **HAMMER:** Manual
INITIAL GW DEPTH: ▼ 3 feet **EST. SHGW DEPTH:** ▽ 2 feet

Depth (feet)	Elevation	Material Description	Graphic	Groundwater	Sample Type	N-Value
0		Loose to dense brown to dark brown and brown fine-grained SAND with trace organics (SP)		▽ ▼		
5						7
						9
10						13
15						14
20						12
25						19
30						26
35						29
40						32
45						34
50						28

● N-Value (Blows per Foot)
▲ Moisture Content (%)
◇ Organic Content (%)
■ Fines Content (%)
PL LL
10 20 30 40 50 60 70 80 90

Note: Boring Terminated at 50 feet

This information pertains only to this boring and should not be interpreted as being indicative of the site.

NOVA

TEST BORING RECORD B-2

PROJECT NAME: GCSC Nursing Simulation Building **DATE:** 5/21/2025
PROJECT NO.: 2025047 **CLIENT:** Mr. Jason Parker
PROJECT LOCATION: Panama City, Bay County, Florida
LOCATION: See Boring Location Plan **ELEVATION:** Existing Grade
DRILLED BY: L. Wattson **LOGGED BY:** M. Keramidas
DRILLING METHOD: Mud Rotary **HAMMER:** Manual
INITIAL GW DEPTH: ▼ 3 feet **EST. SHGW DEPTH:** ▽ 2 feet

Depth (feet)	Elevation	Material Description	Graphic	Groundwater	Sample Type	N-Value
0		Loose to dense brown to dark brown and brown fine-grained SAND with trace organics (SP)		▽ ▼		6, 8, 15, 19, 12, 25, 22, 29, 26, 36, 30
50						

● N-Value (Blows per Foot)
▲ Moisture Content (%)
◇ Organic Content (%)
■ Fines Content (%)
PL LL
10 20 30 40 50 60 70 80 90

This information pertains only to this boring and should not be interpreted as being indicative of the site.

Note: Boring Terminated at 50 feet

TEST BORING RECORD B-3

NOVA

PROJECT NAME: GCSC Nursing Simulation Building **DATE:** 5/21/2025
PROJECT NO.: 2025047 **CLIENT:** Mr. Jason Parker
PROJECT LOCATION: Panama City, Bay County, Florida
LOCATION: See Boring Location Plan **ELEVATION:** Existing Grade
DRILLED BY: L. Wattson **LOGGED BY:** M. Keramidas
DRILLING METHOD: Mud Rotary **HAMMER:** Manual
INITIAL GW DEPTH: ▼ 3 feet **EST. SHGW DEPTH:** ▽ 2 feet

Depth (feet)	Elevation	Material Description	Graphic	Groundwater	Sample Type	N-Value
0		Loose brown fine-grined SAND (SP)		▽ ▼		
5						10
		Loose to medium dense dark brown fine-grained slightly silty SAND with few organics (SP-SM)				11
						10
10						
15						16
20						24
		Medium dense to dense brown fine-grained SAND (SP)				
25						21
30						35

● N-Value (Blows per Foot)
▲ Moisture Content (%)
◇ Organic Content (%)
■ Fines Content (%)

PL LL
10 20 30 40 50 60 70 80 90

This information pertains only to this boring and should not be interpreted as being indicative of the site.

Note: Boring Terminated at 30 feet

NOVA

TEST BORING RECORD B-4

PROJECT NAME: GCSC Nursing Simulation Building **DATE:** 5/21/2025
PROJECT NO.: 2025047 **CLIENT:** Mr. Jason Parker
PROJECT LOCATION: Panama City, Bay County, Florida
LOCATION: See Boring Location Plan **ELEVATION:** Existing Grade
DRILLED BY: L. Wattson **LOGGED BY:** M. Keramidas
DRILLING METHOD: Mud Rotary **HAMMER:** Manual
INITIAL GW DEPTH: ▼ 3 feet **EST. SHGW DEPTH:** ▽ 2 feet

Depth (feet)	Elevation	Material Description	Graphic	Groundwater	Sample Type	N-Value
0		Loose to dense brown to dark brown and brown fine-grained SAND with trace organics (SP)		▽ ▼		
5						9
						12
						9
10						
						19
15						
						23
20						
						27
25						
						41
30						

● N-Value (Blows per Foot)
▲ Moisture Content (%)
◇ Organic Content (%)
■ Fines Content (%)
PL LL
10 20 30 40 50 60 70 80 90

This information pertains only to this boring and should not be interpreted as being indicative of the site.

Note: Boring Terminated at 30 feet

APPENDIX C
Laboratory Data

SUMMARY OF CLASSIFICATION & INDEX TESTING

GCSC Nursing Simulation Building
Panama City, Bay County, Florida
NOVA Project Number 10111-2025047

Boring Number	Sample Depth (ft)	Natural Moisture (%)	Percent (%) Passing Sieve #200	Percent Organic (%)	USCS Soil Classification
B-1	0 – 2	5	4	½	SP
B-2	2 – 4	16	3	½	SP
B-3	6 – 8	26	6	3	SP-SM
B-4	4 – 6	24	3	½	SP

APPENDIX D
Support Documents

Important Information about This

Geotechnical-Engineering Report

Subsurface problems are a principal cause of construction delays, cost overruns, claims, and disputes.

While you cannot eliminate all such risks, you can manage them. The following information is provided to help.

Geotechnical Services Are Performed for Specific Purposes, Persons, and Projects

Geotechnical engineers structure their services to meet the specific needs of their clients. A geotechnical-engineering study conducted for a civil engineer may not fulfill the needs of a constructor — a construction contractor — or even another civil engineer. Because each geotechnical- engineering study is unique, each geotechnical-engineering report is unique, prepared *solely* for the client. No one except you should rely on this geotechnical-engineering report without first conferring with the geotechnical engineer who prepared it. *And no one — not even you* — should apply this report for any purpose or project except the one originally contemplated.

Read the Full Report

Serious problems have occurred because those relying on a geotechnical-engineering report did not read it all. Do not rely on an executive summary. Do not read selected elements only.

Geotechnical Engineers Base Each Report on a Unique Set of Project-Specific Factors

Geotechnical engineers consider many unique, project-specific factors when establishing the scope of a study. Typical factors include: the client's goals, objectives, and risk-management preferences; the general nature of the structure involved, its size, and configuration; the location of the structure on the site; and other planned or existing site improvements, such as access roads, parking lots, and underground utilities. Unless the geotechnical engineer who conducted the study specifically indicates otherwise, do not rely on a geotechnical-engineering report that was:

- not prepared for you;
- not prepared for your project;
- not prepared for the specific site explored; or
- completed before important project changes were made.

Typical changes that can erode the reliability of an existing geotechnical-engineering report include those that affect:

- the function of the proposed structure, as when it's changed from a parking garage to an office building, or from a light-industrial plant to a refrigerated warehouse;
- the elevation, configuration, location, orientation, or weight of the proposed structure;
- the composition of the design team; or
- project ownership.

As a general rule, *always* inform your geotechnical engineer of project changes—even minor ones—and request an assessment of their impact. *Geotechnical engineers cannot accept responsibility or liability for problems that occur because their reports do not consider developments of which they were not informed.*

Subsurface Conditions Can Change

A geotechnical-engineering report is based on conditions that existed at the time the geotechnical engineer performed the study. *Do not rely on a geotechnical-engineering report whose adequacy may have been affected by*: the passage of time; man-made events, such as construction on or adjacent to the site; or natural events, such as floods, droughts, earthquakes, or groundwater fluctuations. *Contact the geotechnical engineer before applying this report to determine if it is still reliable.* A minor amount of additional testing or analysis could prevent major problems.

Most Geotechnical Findings Are Professional Opinions

Site exploration identifies subsurface conditions only at those points where subsurface tests are conducted or samples are taken. Geotechnical engineers review field and laboratory data and then apply their professional judgment to render an opinion about subsurface conditions throughout the site. Actual subsurface conditions may differ — sometimes significantly — from those indicated in your report. Retaining the geotechnical engineer who developed your report to provide geotechnical-construction observation is the most effective method of managing the risks associated with unanticipated conditions.

A Report's Recommendations Are Not Final

Do not overrely on the confirmation-dependent recommendations included in your report. *Confirmation-dependent recommendations are not final,* because geotechnical engineers develop them principally from judgment and opinion. Geotechnical engineers can finalize their recommendations *only* by observing actual subsurface conditions revealed during construction. *The geotechnical engineer who developed your report cannot assume responsibility or liability for the report's confirmation-dependent recommendations if that engineer does not perform the geotechnical-construction observation required to confirm the recommendations' applicability.*

A Geotechnical-Engineering Report Is Subject to Misinterpretation

Other design-team members' misinterpretation of geotechnical-engineering reports has resulted in costly

problems. Confront that risk by having your geotechnical engineer confer with appropriate members of the design team after submitting the report. Also retain your geotechnical engineer to review pertinent elements of the design team's plans and specifications. Constructors can also misinterpret a geotechnical-engineering report. Confront that risk by having your geotechnical engineer participate in prebid and preconstruction conferences, and by providing geotechnical construction observation.

Do Not Redraw the Engineer's Logs

Geotechnical engineers prepare final boring and testing logs based upon their interpretation of field logs and laboratory data. To prevent errors or omissions, the logs included in a geotechnical-engineering report should *never* be redrawn for inclusion in architectural or other design drawings. Only photographic or electronic reproduction is acceptable, *but recognize that separating logs from the report can elevate risk.*

Give Constructors a Complete Report and Guidance

Some owners and design professionals mistakenly believe they can make constructors liable for unanticipated subsurface conditions by limiting what they provide for bid preparation. To help prevent costly problems, give constructors the complete geotechnical-engineering report, *but* preface it with a clearly written letter of transmittal. In that letter, advise constructors that the report was not prepared for purposes of bid development and that the report's accuracy is limited; encourage them to confer with the geotechnical engineer who prepared the report (a modest fee may be required) and/or to conduct additional study to obtain the specific types of information they need or prefer. A prebid conference can also be valuable. *Be sure constructors have sufficient time* to perform additional study. Only then might you be in a position to give constructors the best information available to you, while requiring them to at least share some of the financial responsibilities stemming from unanticipated conditions.

Read Responsibility Provisions Closely

Some clients, design professionals, and constructors fail to recognize that geotechnical engineering is far less exact than other engineering disciplines. This lack of understanding has created unrealistic expectations that have led to disappointments, claims, and disputes. To help reduce the risk of such outcomes, geotechnical engineers commonly include a variety of explanatory provisions in their reports. Sometimes labeled "limitations," many of these provisions indicate where geotechnical engineers' responsibilities begin and end, to help others recognize their own responsibilities and risks. *Read these provisions closely.* Ask questions. Your geotechnical engineer should respond fully and frankly.

Environmental Concerns Are Not Covered

The equipment, techniques, and personnel used to perform an *environmental* study differ significantly from those used to perform a *geotechnical* study. For that reason, a geotechnical-engineering report does not usually relate any environmental findings, conclusions, or recommendations; e.g., about the likelihood of encountering underground storage tanks or regulated contaminants. *Unanticipated environmental problems have led to numerous project failures.* If you have not yet obtained your own environmental information, ask your geotechnical consultant for risk-management guidance. *Do not rely on an environmental report prepared for someone else.*

Obtain Professional Assistance To Deal with Mold

Diverse strategies can be applied during building design, construction, operation, and maintenance to prevent significant amounts of mold from growing on indoor surfaces. To be effective, all such strategies should be devised for the *express purpose* of mold prevention, integrated into a comprehensive plan, and executed with diligent oversight by a professional mold-prevention consultant. Because just a small amount of water or moisture can lead to the development of severe mold infestations, many mold- prevention strategies focus on keeping building surfaces dry. While groundwater, water infiltration, and similar issues may have been addressed as part of the geotechnical- engineering study whose findings are conveyed in this report, the geotechnical engineer in charge of this project is not a mold prevention consultant; *none of the services performed in connection with the geotechnical engineer's study were designed or conducted for the purpose of mold prevention. Proper implementation of the recommendations conveyed in this report will not of itself be sufficient to prevent mold from growing in or on the structure involved.*

Rely, on Your GBC-Member Geotechnical Engineer for Additional Assistance

Membership in the Geotechnical Business Council of the Geoprofessional Business Association exposes geotechnical engineers to a wide array of risk-confrontation techniques that can be of genuine benefit for everyone involved with a construction project. Confer with you GBC-Member geotechnical engineer for more information.

GEOTECHNICAL BUSINESS COUNCIL
of the Geoprofessional Business Association

8811 Colesville Road/Suite G106, Silver Spring, MD 20910
Telephone: 301/565-2733 Facsimile: 301/589-2017
e-mail: info@geoprofessional.org www.geoprofessional.org

Copyright 2015 by Geoprofessional Business Association (GBA). Duplication, reproduction, or copying of this document, or its contents, in whole or in part, by any means whatsoever, is strictly prohibited, except with GBA's specific written permission. Excerpting, quoting, or otherwise extracting wording from this document is permitted only with the express written permission of GBA, and only for purposes of scholarly research or book review. Only members of GBA may use this document as a complement to or as an element of a geotechnical-engineering report. Any other firm, individual, or other entity that so uses this document without being a GBA member could be commiting negligent or intentional (fraudulent) misrepresentation.

THIS PAGE LEFT INTENTIONALLY BLANK

SECTION 024116 - STRUCTURE DEMOLITION

PART 1 - GENERAL

1.1 SUMMARY

A. Section Includes:

1. Demolition and removal of buildings **and site improvements**.
2. **Removing** below-grade construction.
3. Disconnecting, capping or sealing, and **abandoning in-place**, **removing** site utilities.
4. Salvaging items for reuse by Owner.
5. Contractors will be given the opportunity to walk the site of both buildings prior to the Mandatory Pre-Bid. (Date and time to be determined)
6. There will be a Mandatory pre Bid (Date and Time to be determined.
7. There is asbestos to be abated in building B. Building A has been cleared. See attached Asbestos Surveys. Removal of Asbestos will be included in the demolition scope.

1.2 MATERIALS OWNERSHIP

A. Unless otherwise indicated, demolition waste becomes property of Contractor.

B. Historic items, relics, antiques, and similar objects including, but not limited to, cornerstones and their contents, commemorative plaques and tablets, and other items of interest or value to Owner that may be uncovered during demolition remain the property of Owner.

1. Carefully salvage in a manner to prevent damage and promptly return to Owner.

1.3 PREINSTALLATION MEETINGS

A. Pre-demolition Conference: Conduct conference at **Project site**.

1.4 INFORMATIONAL SUBMITTALS

A. Engineering Survey: Submit engineering survey of condition of building.

B. Proposed Protection Measures: Submit report, including Drawings, that indicates the measures proposed for protecting individuals and property[**, for environmental protection**,**for dust control**. Indicate proposed locations and construction of barriers.

1. Adjacent Buildings: Detail special measures proposed to protect adjacent buildings to remain **including means of egress from those buildings**.

C. Schedule of building demolition activities with starting and ending dates for each activity.

D. Pre-demolition photographs or video.

E. Statement of Refrigerant Recovery: Signed by refrigerant recovery technician.

1.5 CLOSEOUT SUBMITTALS

A. Inventory of items that have been removed and salvaged.

1.6 QUALITY ASSURANCE

A. Refrigerant Recovery Technician Qualifications: Certified by EPA-approved certification program.

1.7 FIELD CONDITIONS

A. Buildings to be demolished will be vacated and their use discontinued before start of the Work.

B. Buildings immediately adjacent to demolition area will be occupied. Conduct building demolition so operations of occupied buildings will not be disrupted.

1. Provide not less than **72** hours' notice of activities that will affect operations of adjacent occupied buildings.
2. Maintain access to existing walkways, exits, and other facilities used by occupants of adjacent buildings.

    a. Do not close or obstruct walkways, exits, or other facilities used by occupants of adjacent buildings without written permission from authorities having jurisdiction.

C. Conditions existing at time of inspection for bidding purpose will be maintained by Owner as far as practical.

1. Before building demolition, Owner will remove contents.

D. Hazardous Materials: It is not expected that hazardous materials will be encountered in the Work.

1. If materials suspected of containing hazardous materials are encountered, do not disturb; immediately notify Architect and Owner. Hazardous materials will be removed by Owner under a separate contract.

E. On-site storage or sale of removed items or materials is not permitted.

F. Arrange demolition schedule so as not to interfere with **Owner's on-site operations**.

PART 2 - PRODUCTS

2.1 PERFORMANCE REQUIREMENTS

A. Regulatory Requirements: Comply with governing EPA notification regulations before beginning demolition. Comply with hauling and disposal regulations of authorities having jurisdiction.

B. Standards: Comply with ANSI/ASSE A10.6 and NFPA 241.

2.2 SOIL MATERIALS

A. Satisfactory Soils: Comply with requirements in Section 312000 "Earth Moving."

PART 3 - EXECUTION

3.1 EXAMINATION

A. Verify that utilities have been disconnected and capped before starting demolition operations.

B. **Perform**] an engineering survey of condition of building to determine whether removing any element might result in structural deficiency or unplanned collapse of any portion of structure or adjacent structures during building demolition operations.

C. Inventory and record the condition of items to be removed and salvaged.

3.2 PREPARATION

A. Refrigerant: Before starting demolition, remove refrigerant from mechanical equipment according to 40 CFR 82 and regulations of authorities having jurisdiction.

B. Salvaged Items: Comply with the following:

1. Clean salvaged items of dirt and demolition debris.
2. Pack or crate items after cleaning. Identify contents of containers.
3. Store items in a secure area until delivery to Owner.
4. Transport items to storage area [**designated by Owner**] [**indicated on Drawings**].
5. Protect items from damage during transport and storage.

3.3 UTILITY SERVICES AND MECHANICAL/ELECTRICAL SYSTEMS

A. Existing Utilities to be Disconnected: Locate, identify, disconnect, and seal or cap off utilities serving buildings and structures to be demolished.

1. Contractor shall arrange to shut off utilities to the building being demolished when required. Coordinate with the Owner.
2. Arrange to shut off utilities with utility companies.
3. If removal, relocation, or abandonment of utility services will affect adjacent occupied buildings, then provide temporary utilities that bypass buildings and structures to be demolished and that maintain continuity of service to other buildings and structures.
4. Cut off pipe or conduit a minimum of **24 inches (610 mm)** below grade. Cap, valve, or plug and seal remaining portion of pipe or conduit after bypassing according to requirements of authorities having jurisdiction.
5. Do not start demolition work until utility disconnecting and sealing have been completed and verified in writing.

3.4 PROTECTION

A. Existing Facilities: Protect adjacent walkways, loading docks, building entries, and other building facilities during demolition operations. Maintain exits from existing buildings.

B. Temporary Shoring: Provide and maintain interior and exterior shoring, bracing, or structural support to preserve stability and prevent unexpected movement or collapse of construction being demolished.

C. Existing Utilities to Remain: Maintain utility services to remain and protect from damage during demolition operations. Do not interrupt existing utilities serving adjacent occupied or operating facilities unless authorized in writing by Owner and authorities having jurisdiction.

D. Temporary Protection: Erect temporary protection, such as walks, fences, railings, canopies, and covered passageways, where required by authorities having jurisdiction and as indicated. Comply with requirements in Section 015000 "Temporary Facilities and Controls."

1. Protect adjacent buildings and facilities from damage due to demolition activities.
2. Protect existing site improvements, appurtenances, and landscaping to remain.
3. Erect a plainly visible fence around drip line of individual trees or around perimeter drip line of groups of trees to remain.
4. Provide temporary barricades and other protection required to prevent injury to people and damage to adjacent buildings and facilities to remain.
5. Provide protection to ensure safe passage of people around building demolition area and to and from occupied portions of adjacent buildings and structures.
6. Protect walls, windows, roofs, and other adjacent exterior construction that are to remain and that are exposed to building demolition operations.
7. Erect and maintain dustproof partitions and temporary enclosures to limit dust, noise, and dirt migration to occupied portions of adjacent buildings.

E. Remove temporary barriers and protections where hazards no longer exist. Where open excavations or other hazardous conditions remain, leave temporary barriers and protections in place.

3.5 DEMOLITION

A. General: Demolish indicated buildings **and site improvements** completely. Use methods required to complete the Work within limitations of governing regulations and as follows:

1. Do not use cutting torches until work area is cleared of flammable materials. Maintain portable fire-suppression devices during flame-cutting operations.
2. Maintain fire watch during and for at least <**Insert number**> hours after flame-cutting operations.
3. Maintain adequate ventilation when using cutting torches.
4. Locate building demolition equipment and remove debris and materials so as not to impose excessive loads on supporting walls, floors, or framing.

B. Site Access and Temporary Controls: Conduct building demolition and debris-removal operations to ensure minimum interference with roads, streets, walks, walkways, and other adjacent occupied and used facilities.

1. Do not close or obstruct streets, walks, walkways, or other adjacent occupied or used facilities without permission from Owner and authorities having jurisdiction. Provide alternate routes around closed or obstructed trafficways if required by authorities having jurisdiction.
2. Use water mist and other suitable methods to limit spread of dust and dirt. Comply with governing environmental-protection regulations.

C. Explosives: Use of explosives is not permitted.

D. Burning is not permitted.

E. Proceed with demolition of structural framing members systematically, from higher to lower level. Complete building demolition operations above each floor or tier before disturbing supporting members on the next lower level.

F. Remove debris from elevated portions of the building by chute, hoist, or other device that will convey debris to grade level in a controlled descent.

G. **Demolish** foundation walls and other below-grade construction **that are within footprint of new construction and extending 5 feet (1.5 m)**] **outside footprint indicated for new construction**].

1. Remove below-grade construction, including basements, foundation walls, and footings, **completely**.

H. Existing Utilities: **Abandon** existing utilities and below-grade utility structures that are within [**5 feet (1.5 m)**] outside footprint indicated for new construction. Abandon utilities outside this area. Note abandoned utilities on Project Record drawings

I. Below-Grade Areas: Completely fill below-grade areas and voids resulting from building demolition operations with s**atisfactory soil materials** according to backfill requirements in Section 312000 "Earth Moving."

J. Site Grading: Uniformly rough grade area of demolished construction to a smooth surface, free from irregular surface changes. Provide a smooth transition between adjacent existing grades and new grades.

K. Promptly repair damage to adjacent buildings caused by demolition operations.

3.6 CLEANING

A. Remove demolition waste materials from Project site **and dispose of them in an EPA-approved construction and demolition waste landfill acceptable to authorities having jurisdiction and recycle or dispose of them according to Section 017419 "Construction Waste Management and Disposal."**

B. Do not burn demolished materials.

C. Clean adjacent structures and improvements of dust, dirt, and debris caused by building demolition operations. Return adjacent areas to condition existing before building demolition operations began.

END OF SECTION 024116

03 11 19 - INSULATING CONCRETE FORMING

PART 1 GENERAL

1.01 SUMMARY

A. Section Includes:
1. Comply with the requirements for Division 1.
2. Furnish all labor, materials, tools and equipment to perform the complete erection/ installation of the Insulating Concrete Form System (ICF), installation of reinforcing steel, placement of concrete within formwork, and final cleanup.
3. Adequate bracing and false work shall be provided by the Installing Contractor to comply with all applicable Codes.

B. Products Supplied But Not Installed Under This Section:
1. *EPS* compatible modified bituminous sheet waterproofing membrane.
2. *EPS* compatible parge coat.

C. Products Installed But Not Supplied Under This Section:
1. Sleeves
2. Inserts
3. Anchors
4. Bolts
5. Reinforcing Steel
6. Window & Door Opening Bucks
7. Concrete

D. Related Requirements:
1. Section 03 20 00- Concrete Reinforcing
2. Section 03 30 00- Cast-In-Place Concrete
3. Section 03 40 00- Precast Concrete
4. Section 04 00 00- Masonry
5. Section 05 00 00- Metals
6. Section 06 00 00- Wood & Plastics
7. Section 07 13 00- Sheet Waterproofing
8. Section 07 24 00- Exterior Insulation and Finish Systems
9. Section 07 46 00- Siding
10. Section 08 00 00- Openings
11. Sections 09 22 00
through 09 25 00- Supports for Plaster and Gypsum Board, Gypsum Plastering, Portland Cement Plastering, Other Plastering
12. Sections 09 70 00
through 09 80 00- Wall Finishes/Acoustical Treatment

1.02 PRICE AND PAYMENT PROCEDURES

A. Alternates:
1. Materials shall be only as specified in Paragraphs 2.02 & 2.03 as per Manufacturer specified in Paragraph 2.01. No alternate materials shall be accepted for this Section.

1.03 REFERENCES

A. Abbreviations and Acronyms:
   1. *EPS*- Acronym for "Expanded Polystyrene" when referencing the insulating foam component of the Insulating Concrete Form System.
   2. *ICF*- Acronym for "Insulating (or Insulated) Concrete Form"

B. Definitions:
   1. *Form Alignment System*- a form alignment & scaffold system designed exclusively for use with Insulating Concrete Forms.
   2. *Trained Installer*- An installation contractor, who has received instructional training in the installation of the specified Insulating Concrete Form System and is capable of providing written verification of his designation as such by the specified manufacturer of the system being installed.
   3. *Technical Associate*- A technical representative, usually a staff member of a Distribution Firm, who has received instructional training in the installation of Insulating Concrete Form system and is in the capacity of supervising an installation crew on site.
   4. *Window or Door Opening Buck*- a pre-manufactured or site constructed frame assembly consisting of wood or plastic material (or combination thereof) used to frame a rough opening within the forming system that will retain concrete around the opening. The frame can also provide for subsequent anchorage of doors and windows within the wall assembly.

C. Reference Standards:
   1. American Concrete Institute (ACI)
      a. ACI 318 Building Code Requirements for Structural Concrete and Commentary

   2. American Society for Testing and Materials (ASTM)
      a. ASTM C165: Standard Test Method for Measuring Compressive Properties of Thermal Insulations
      b. ASTM C177: Standard Test Method for Steady-State Heat Flux Measurements and Thermal Transmission Properties by Means of the Guarded-Hot-Plate Apparatus
      c. ASTM C203: Standard Test Methods for Breaking Load and Flexural Properties of Block-Type Thermal Insulation
      d. ASTM C272: Standard Test Method for Water Absorption of Core Materials for Structural Sandwich Constructions
      e. ASTM C303: Standard Test Method for Dimensions and Density of Preformed Block and Board-Type Thermal Insulation
      f. ASTM C518: Standard Test Method for Steady-State Thermal Transmission Properties by Means of the Heat Flow Meter Apparatus
      g. ASTM C578: Standard Specification for Rigid, Cellular Polystyrene Thermal Insulation
      h. ASTM D1621: Standard Test Method for Compressive Properties Of Rigid Cellular Plastics
      i. ASTM D1622: Standard Test Method for Apparent Density of Rigid Cellular Plastics
      j. ASTM D2126: Standard Test Method for Response of Rigid Cellular Plastics to Thermal and Humid Aging
      k. ASTM D2863: Standard Test Method for Measuring the Minimum Oxygen Concentration to Support Candle-Like Combustion of Plastics (Oxygen Index)
      l. ASTM E84: Standard Test Method for Surface Burning Characteristics of Building Materials
      m. ASTM E90 Standard Test Method for Laboratory Measurement of Airborne Sound Transmission Loss of Building Partitions and Elements
      n. ASTM E96: Standard Test Methods for Water Vapor Transmission of Materials
      o. ASTM E336: Standard Test Method for Measurement of Airborne Sound Attenuation between Rooms in Buildings.
      p. ASTM E2634: Standard Specification for Flat Wall Insulating Concrete Form (ICF) Systems

3. International Code Council Evaluation Service (ICC-ES)
   a. AC12: Acceptance Criteria for Foam Plastic Insulation
   b. AC15: Concrete Floor, Roof and Wall Systems and Concrete Masonry Wall Systems
   c. AC 353: Stay-in-place, Foam Plastic Insulating Concrete Form (ICF) Systems for Solid Concrete

4. National Fire Protection Association (NFPA)
   a. NFPA 259: Standard Test Method for Potential Heat of Building Materials
   b. NFPA 268: Standard Test Method for Determining Ignitibility of Exterior Wall Assemblies Using a Radiant Heat Energy Source
      NFPA 285: Standard Fire Test Method for Evaluation of Fire Propagation Characteristics of Exterior Non-Load-Bearing Wall Assemblies Containing Combustible Components
   c. NFPA 286: Standard Methods of Fire Tests for Evaluating Contribution of Wall and Ceiling Interior Finish to Room Fire Growth

5. Southwest Research Institute (SwRI)
   a. SwRI 99-02: Crawl Space Insulation Evaluation Protocol

6. Uniform Building Code (UBC)
   a. UBC 26-3: Room Fire Test Standard for Interior Foam Plastic Systems
   b. UBC 26-4: Method of Test for the Evaluation of Flammability Characteristics of Exterior, Non-load-bearing Wall Panel Assemblies Using Foam Plastic Insulation
   c. UBC 26-9: Method of Test for the Evaluation of Flammability Characteristics of Exterior, Non-load-bearing Wall Assemblies Containing Combustible Components Using the Intermediate-Scale, Multi-Story Test Apparatus

7. Underwriters Laboratories Inc. (UL)
   a. UL 263: Fire Tests of Building Construction and Materials

1.04 ADMINISTRATIVE REQUIREMENTS

A. Pre-installation Meetings:
   1. Ensure those materials listed under Sub-Sections 2.01 though 2.03 are provided to *Trained Installer* prior to commencement of work under this Section.
   2. *Trained Installer* for this section shall provide list of known special requirements for interface of materials provided in this section as such may pertain to co-ordination with mechanical, electrical, plumbing, interior and exterior finish sub trades prior to commencement of work.

1.05 SUBMITTALS

A. Bid Submission Documents:
   1. Contractor shall submit with bid proposal for this section written confirmation of:
      a. Name of ICF Product forming the basis for the material cost of the bid.
      b. Name of ICF Product forming the basis for the labor cost of the bid.
      If two different ICF products are involved in above, contractor shall specify BOTH material AND Labor bids associated with each material.
   2. Contractor shall submit with bid proposal for this section, written verification of credentials of the subcontractor responsible for the form system installation (*trained installer*) designated to be installing the ICF product as follows:
      a. That the installing contractor is either:

1) An experienced ICF Contractor (*trained installer*) with minimum 3 years experience in commercial ICF construction or;
2) A qualified masonry or traditional concrete forming contractor with minimum 5 years experience in commercial construction applications.

b. That the installing contractor has demonstrated experience on supervising commercial construction projects of with gross floor areas of 50,000 ft^2 (4,645 m^2) or greater. (Submit project name(s)/ location(s).

B. Test and Evaluation Reports:
1. *Technical Associate* for form system shall submit on request, relevant laboratory tests or data that validate product compliance with performance criteria specified prior to commencement of work under this Section (See Section 2.03 B Regulatory Requirements).
2. Submit copy of valid product evaluation report, demonstrating compliance with this specification and applicable codes for site condition. (See Section 2.03 B Regulatory Requirements).

C. Manufacturers' Instructions:
1. Submit copy of manufacturer's product installation manual

D. *Form Alignment System* Engineering:
1. For wall heights above 12 feet (3.6m) of unsupported wall height, the contractor shall provide scaffold engineering for support of the *Form Alignment System* or shall ensure this engineering is included by the engineer of record for support of the form system and the *Form Alignment System* assemblies during construction.

1.06 CLOSEOUT SUBMITTALS

A. Warranty Documentation:
1. Product warranty documentation specified under Section 1.11 shall be supplied to contractor (for subsequent provision to building owner) upon completion of building construction.

1.07 MAINTENANCE MATERIAL SUBMITTALS

A. Maintenance:
1. *Trained Installer* shall supply to contractor (for subsequent provision to building owner) copy of pertinent documentation as relates to instruction on post repair, renovation, modification or service work with respect to the form system once occupancy commences.

1.08 QUALITY ASSURANCE

A. Qualification- Installers / Applicators / Erectors:
1. Contractor shall engage the services of a *Trained Installer* or *Technical Associate* for the duration of the work under this Section who has been trained in procedures pertaining to the correct installation of the specified form system (*Trained installer* may already be the designated ICF Installing Contractor if providing credentials as such).
2. *Trained Installer/Technical Associate* shall furnish proof of training documentation to Contractor prior to commencement of work under this Section.

B. Mock-ups:
1. If required, construct sample wall mock-up panel to include full wall system and details, located where directed by Consultant. Panel may form part of finished work if approved by Consultant.

1.09 DELIVERY, STORAGE, AND HANDLING

A. Delivery and Acceptance Requirements:

1. *Trained Installer/Technical Associate* to meet with Contractor prior to material delivery on site to co-ordinate provision of access, storage area, and protection of insulating concrete form product and spatial requirements for *Form Alignment System* placement steel storage & forming.
2. Deliver products in original factory packaging, bearing identification of product, manufacturer and batch/lot number.
3. *Trained Installer* shall furnish product packaging labels to contractor as required to maintain traceability of product for duration of contract.
4. Bulk of form shipment shall be delivered as pre-assembled units and folded flat to maximize shipping space. Only form panels and insert webs as may be required for floor interfaces or specialized construction on site are to be shipped unassembled but in labeled packages for traceability

B. Storage and Handling Requirements:
1. Handle and store products in location to prevent damaging and soiling.
2. Maintain form materials and accessories in original packaging (or provide similar protection to unpackaged form materials -should on-site storage prior to installation extend beyond 3 months).
3. Form units and related form installation materials and equipment to be stored flat until time of use.

1.10 SITE CONDITIONS

A. Ambient Conditions:
1. Use appropriate measures for protection and supplementary heating when required to ensure proper curing conditions in accordance with manufacturer's recommendations if installation is carried out during periods of weather where temperatures are below minimum specified by governing Building Code for concrete and masonry.

1.11 WARRANTY

A. Manufacturer Warranty:
1. *Technical Associate* shall supply of written copy of specific warranties of the product.

PART 2 PRODUCTS

2.01 MANUFACTURERS

A. Manufacturer List:
1. Provide insulating concrete form system materials from one of the following Manufacturers assuring that system selected complies in all respects with performance requirements of Section 2.03.

Basis of Design: Fox Blocks (or Equal)
Fox Blocks Regional Advisor for the SE US; John Ritch. john@foxblocks.com 770.765.9036
Fox Blocks Business Development Advisor; Justice Olson justice@foxblocks.com 608.937.9332

B. Substitution Limitations:
1. Forming System shall carry an active listing/classification for fire resistance rating of the completed wall assembly as endorsed by Underwriters Laboratories® UL per testing to the ANSI/UL-263 Standard.
2. Form System supplied shall provide full height webs fastening strips in contact throughout height of the wall assembly at 8-inches (203 mm) o/c placement within system to assure minimum settlement during concrete placement and maximum sleeve insertion diameter possible between webs.
3. Form system shall provide dovetail flutes to both sides of its interior cavity to enable structural bonding of concrete to foam once concrete is cured.

2.02 INSULATING CONCRETE FORMING SYSTEM (ICF)

A. Where project scope permits, form units shall be supplied through an authorized distributor of the Manufacturer listed for the bid. The distributor shall be capable of providing product on site within 24 hours notice.

B. The Manufacturer's authorized distributor shall have available local to the region, technical sales staff that can be contacted or even contracted (under separate contract) as may be required to provide timely on site problem resolution as installation or product supply issues may arise.

C. Where local distribution cannot service ~~to~~ the requirements of the contract scope and product is to be supplied directly by the manufacturer, the manufacturer shall provide on-site technical assistance as specified under Clause D of this section.

D. Where product is supplied direct, technical assistance supplied by the manufacturer shall include the provision of a technical consultant direct from or contracted by the manufacturer for first week of contract that form product is to be erected on the site to coordinate form system installation, crew organization and set-up. During installation, (as agreed to with terms of contractor), the manufacturer's technical consultant shall provide periodic site visits (as may required under separate contract) at key stages of form installation, to assure continued product installation quality.

2.03 DESCRIPTION

A. General:
1. Insulating concrete form system shall consist of two (2) flame resistant panels of expanded polystyrene (*EPS*) connected by either high-density polypropylene hinged pin foldable webs or EPS embedded polystyrene fastening strips interconnected with slide in format - high density polypropylene web connectors. EPS foam panels shall feature continuous vertical dove tail grooves on interior panel surfaces to provide integral surface bonding to concrete core once filled and concrete is cured. Dove tail grooves shall also facilitate structural linkage with end cap forms placed into the form cavity where required as part of the overall architectural design layout.
2. All web fastening strips to run full height of form and be fitted top and bottom with reversible fitting, "triple-tooth" interlocking mechanisms to enable positive vertical interlocking of forms with each other. Wall system webs to provide minimum 1 ½" (38mm) wide fastening strips at 8-inches (203mm) on center approx 5/8-inch (15.9 mm) below insulation face to facilitate finish fastening of both interior and exterior finishes.
3. Insulating concrete form system shall be capable of forming ALL of following concrete core thicknesses: 4, 6, 8, 10 or 12-inches (102, 152, 203,254 or 305 mm) wall sections (as required for various locations throughout project scope with standard form line-up) (See form dimensions summary Attachments Table A at end of Section.
4. Insulating concrete form system shall provide a minimum insulation panel thickness of 2 5/8-inches (66.7mm) throughout ALL forms and panels forming the form system product inventory (with exception of variance required for brick ledge and tapered top forms).
5. All form units of wall forming system shall be capable of being shipped to site in folded condition to minimize shipping cost and site storage space requirement and be capable of being deployed to installation ready condition by simply unfolding the unit in a single pull motion or pull motion combined with insertion of a single web (at corner condition).
6. Standards, corner forms and stand alone panels of form system shall provide fully reversible interlocks along top and bottom edges to assure minimum product waste on site. EPS foam panels shall be molded with 1-inch (25mm) wide by ½-inch (12.7mm) high/deep alternating male/female reversible projection/socket interlocks positioned in pairs along both top and bottom edges of all panels.
7. Wall system shall be capable of providing horizontal and vertical lock positioning of steel within form cavity to conform to all reinforcing requirements of ACI 318.

B. Regulatory Requirements:

1. Form system manufacturer shall provide on request, written documentation verifying active compliance to ICC-ES Acceptance Criteria AC-353 "Stay-in-place, Foam Plastic Insulating Concrete Form (ICF) Systems for Solid Concrete", with valid listing in the report verifying qualification of form system for use in Types I through V construction as qualified under the governing Building Code for this project and additional compliances as outlined in Section 2.03.1.B.3 (below).

2. As alternate to above, Form system manufacturer shall provide IAS Accredited 3rd Party Certification confirming compliance to ASTM E 2634 –" Standard Specification for Flat Wall Insulating Concrete Forms" and verification that the system meets all testing and documentation requirements for use in Types I through V construction as qualified under the governing Building Code for this project as well as additional compliances as outlined in Section 2.03.1.B.3 (below)

3. Documentation as provided per Section 2.03.1.B.1 or 2 above: shall verify compliance to the following regulatory documents and standards:

    a) Form system structural, and general performance assessment of properties of EPS foam and polypropylene materials assessment in accordance with the following standards:
        1. ASTM C578: Standard Specification for Rigid, Cellular Polystyrene Thermal Insulation (which includes results for);

            a. ASTM C165: Standard Test Method for Measuring Compressive Properties of Thermal Insulation
            b. ASTM C177: Standard Test Method for Steady-State Heat Flux Measurements and Thermal Transmission Properties by Means of the Guarded-Hot-Plate Apparatus
            c. ASTM C203: Standard Test Methods for Breaking Load and Flexural Properties of Block-Type Thermal Insulation
            d. ASTM C272: Standard Test Method for Water Absorption of Core Materials for Structural Sandwich Constructions
            e. ASTM C303: Standard Test Method for Dimensions and Density of Preformed Block and Board-Type Thermal Insulation
            f. ASTM C518: Standard Test Method for Steady-State Thermal Transmission Properties by Means of the Heat Flow Meter Apparatus
            g. ASTM D1621: Standard Test Method for Compressive Properties of Rigid Cellular Plastics
            h. ASTM D1622: Standard Test Method for Apparent Density of Rigid Cellular Plastics
            i. ASTM D2126: Standard Test Method for Response of Rigid Cellular Plastics to Thermal and Humid Aging
            j. ASTM D2863: Standard Test Method for Measuring the Minimum Oxygen Concentration to Support Candle-Like Combustion of Plastics (Oxygen Index)
            k. ASTM E96: Standard Test Methods for Water Vapor Transmission of Materials

    b) Finish attachment testing in accordance with:
        1. ASTM D1761: Standard Test Methods for Mechanical Fasteners in Wood (Modified for Polypropylene Web assessment)

    c) Surface Burning, Flash Ignition and Self Ignition Temperature Characteristics assessment of both plastic web and EPS form materials in accordance with:
        1. ASTM D635: Standard Test Method for Rate of Burning and/or Extent and of Burning of Plastics in a Horizontal Position
        2. ASTM E84: Standard Test Method for Surface Burning Characteristics of Building Materials
        3. ASTM D1929: Standard Test Method for Determining Ignition Temperature of Plastics

    d) Verification of performance and compliance of finishes for provision thermal barrier protection to foam plastic.

1. NFPA 286: Standard Methods of Fire Tests for Evaluating Contribution of Wall and Ceiling Interior Finish to Room Fire Growth or…
2. UBC 26-3: Room Fire Test Standard for Interior Foam Plastic Systems

e) Crawl Space Installation Evaluation in accordance with:
1. SwRI 99-02: Crawl Space Insulation Evaluation Protocol

f) Fire Resistance Rated Construction assessment in accordance with:
1. UL 263: Fire Tests of Building Construction and Materials
(See also Sections 2.01 and 2.04.A. 4 through 9)

g) Non-Combustible Construction assessment (i.e. approved non-combustible material finish requirement documentation) in accordance with:
1. NFPA 259: Standard Test Method for Potential Heat of Building Materials
2. NFPA 268: Standard Test Method for Determining Ignitibility of Exterior Wall Assemblies Using a Radiant Heat Energy Source.

h) Assessment of non-combustible finishes verifying exterior protection of foam plastic insulation in accordance with one of the following standards:
1. NFPA 285: Standard Fire Test Method for Evaluation of Fire Propagation Characteristics of Exterior Non-Load-Bearing Wall Assemblies Containing Combustible Components.
2. UBC 26-4: Method of Test for the Evaluation of Flammability Characteristics of Exterior, Non-load-bearing Wall Panel Assemblies Using Foam Plastic Insulation.
3. UBC 26-9: Method of Test for the Evaluation of Flammability Characteristics of Exterior, Non-load-bearing Wall Assemblies Containing Combustible Components Using the Intermediate-Scale, Multi-Story Test Apparatus

i) Additional Testing and engineering documentation to verify qualification of EPS foam panels as a Vapor Retarder in conjunction with testing to:
1. ASTM E-96 Standard Test Methods for Water Vapor Transmission of Materials

j) Testing and engineering documentation to verify qualification of fully assembled wall system as an air barrier element in accordance with:
1. ASTM E1677 Standard Specification for an Air Retarder (AR) Material or System for Low-Rise Framed Building Walls

k) Testing and engineering documentation to verify qualification of the form system as meets the minimum STC performance requirements of 50 in accordance with:
1. ASTM E 90: Standard Test Method for Laboratory Measurement of Airborne Sound Transmission Loss of Building Partitions and Elements, or;
2. ASTM E 336: Standard Test Method for Measurement of Airborne Sound Attenuation between Rooms in Buildings.

C. Sustainability Characteristics:
1. When required by Architect/Engineer, *Technical Associate* for the form system shall provide, written documentation verifying product recycle content and manufacturing location compliances with respect to USGBC/LEED® document submissions.

2.04 PERFORMANCE / DESIGN CRITERIA

A. Capacities:
1. Selected system in conjunction with concrete and designated exterior and interior finishes shall provide minimum insulation level of R 23.59 (hr.ft^2.F/Btu) or (RSI 4.158 (m^2.K/W) -U Factor 0.2405 W/m2.K) across full line of form unit cavity widths.

2. *EPS* foam panels forming part of wall system shall provide maximum vapor permeation rate of 0.78 Perm-inch.(36 ng/Pa.s.m^2) based on 2 5/8-inches (66.7 mm) singles thickness of foam on interior surface of concrete core.
3. Finished wall assembly formed by system shall provide minimum sound transmission class (STC) sound attenuation performance as follows:
   a) 4-inch (100mm) core form (if specified):
      1) STC 42 (when installed with ½-inch (12.7 mm) gypsum board both sides) (Not to be used for demising walls unless specified otherwise by architect)
      2) STC 52 (when installed as specified by manufacturer with additional hat channel and acoustic material with 5/8-inch (15.9 mm) finish on one side (½-inch (12.7 mm) gypsum board opp.).
   b) 6-inch (152mm) core form
      1) STC 50 (with regular ½-inch (12.7 mm) gypsum board both sides)
4. Finished insulating concrete form wall assembly shall be capable of providing fire resistance ratings as listed in this section. Manufacturers of the specified wall assembly number (BXUV.U930) shall be actively listed and classified with Underwriters Laboratories Inc. Listings shall be verifiable under Certifications Directory of UL at:

   http://database.ul.com/cgi-bin/XYV/template/LISEXT/1FRAME/index.html

5. Fire resistance ratings shall be established by testing in full accordance with ANSI/UL 263 – 13th edition when installed as per the listed classification (BXUV.U930)
   a) 4-inch (100mm) core form - 2 hour fire resistance rating
   b) 6-inch (152mm) core form and above - 4 hour fire resistance rating
6. Per BXUV.U930 Note 2- Wall reinforcement shall consist of minimum No. 4 Bar 60 ksi (grade 400 metric) yield strength installed at 16-inches (400 mm) o/c vertically and 18-inches (457mm) o/c horizontally.
7. Per BXUV.U930 Note 3- Concrete shall be minimum 2900 psi (20MPa) compressive strength at 28 days and shall be a minimum density of 145 lbs +/- 5lbs /ft^3 (2,323 kg/m^3 +/- 80 kg/m^3) using regular siliceous concrete aggregate.
8. Per BXUV.U930 Note 4- Finished wall assembly shall provide above noted fire resistance ratings using unclassified or classified ½-inch (12.7mm) gypsum board finish (interior surface only for exterior walls and both sides for interior demising walls).
9. When reinforced per BXUV.U930 Note 2, 6-inch (152 mm) load bearing wall must demonstrate being able to be loaded to a minimum axially applied load of 40,000 lbs/lf (5,532 kg/m) for full 4-hour burn duration under above test conditions.

2.05 MATERIALS

A. Insulating Concrete Forming:
   1. Provide Insulating Concrete Forming as listed in Appendix A as may be required for proper execution of the work.

B. Concrete:
   1. Concrete supplied under Section 06 03 00 shall be of strength as specified by the design engineer (measured at 28 days). Recommended maximum aggregate size to be ½-inch (12.7mm) aggregate for 4 & 6-inch (102 & 152mm) cavity forms and,
      ¾-inch (19mm) aggregate for 8-inch (203 mm) cavity forms and higher.
   2. Recommended concrete slump is 4 to 6-inches +/- 1-inch (102 to 152mm +/- 25mm) (subject to design revision to suit application).
   3. Where required by engineer of record, recommended slump specification shall be attained through addition of super plasticizer/mid-range water reducing agents to achieve design mix strength and concrete flow-ability.

C. Reinforcing Steel:
1. Reinforcing steel shall be as specified in Section 03 21 00 and shall be supplied under that Section for placement by the Form System's *Trained Installer*.

D. Waterproofing:
1. Where specified, waterproofing shall be self-adhesive modified bituminous sheet waterproofing membrane as supplied by concrete form system manufacturer specific to the form system specified under this section. Material to be supplied under this Section & installed as specified under Section 07 13 52 (Modified Bituminous Sheet Waterproofing).
2. Waterproofing material shall be *EPS* foam compatible.

E. Parging:
1. Where called for on drawings, parging (acrylic stucco type) shall be as recommended and supplied by Concrete Form Manufacturer under this section and installed as specified under Section 09 24 00 (Portland Cement Plaster).
2. Alternate EIFS supplied and installed under Section 07 24 00 (Exterior Insulation and Finish System).

2.06 ACCESSORIES

Form Alignment System
1. The *Trained Installer* shall furnish and utilize the Wall Access and *Form Alignment System* (as supplied by the Manufacturer or approved equivalent) to facilitate construction of the wall assembly, and to provide adjustment for ensuring plumbness and straightness of the wall system during construction, just prior to concrete placement and immediately after concrete placement while form system is still adjustable to final finished position.
2. *Form Alignment System* shall be OSHA compliant. *Technical Associate* shall supply engineering documentation pertaining to the "base" *Form Alignment System* components to verify compliance upon request.
3. As specified under Section 1.05 Submittals, for wall heights above 12-feet (3.6 m), the contractor shall provide scaffold engineering for *Form Alignment System* support or shall ensure this engineering is included by the engineer of record for support of the form system during construction.

PART 3 EXECUTION

3.01 INSTALLERS

A. Substitution Limitations:
1. Per Section 1.05 Submittals – Bid Submittal requirements, the installing contractor for this section shall be:

   a) An experienced ICF Contractor (*trained installer*) with minimum 3 years experience in commercial ICF construction or;
   b) A qualified mason~~ry~~ or traditional concrete forming contractor with minimum 5 years experience in commercial construction applications.
   c) A qualified master carpenter with minimum 5 years experience in commercial construction applications.
2. Per Section 1.05 Submittals –Bid Submittal requirements, the installing contractor shall have demonstrated experience on supervising commercial construction projects of with gross floor areas of 50,000 ft^2 (4,645 m^2) or greater. (Submit project name(s)/ location(s)).

3.02 EXAMINATION

A. Verification of Conditions:

1. Inspect all areas included in Part 1 Section 1.01 Summary to establish extent of work and verify site access conditions.
2. Verify that site conditions are as set out in Part 1- Section 1.10 Site Conditions.

B. Evaluation and Assessment:
1. Examine footings installed under Section 03 30 53 are within +/-¼-inch (6mm) of level and that steps footing increments are 18-inches (457 mm) in height.
2. Where partial or half course is intended for starting course elevation, ensure step footing increment is equal to cut form unit less ½-inch (13 mm).
3. When specified, ensure reinforcing steel dowels are in place at specified centers along footing lengths.
4. Ensure reinforcement steel dowels have OSHA compliant protection installed until formwork is erected above dowel level.

3.03 PREPARATION

A. Surface Preparation:
1. Clean all debris from top of footings prior to commencement of insulating concrete form system installation.
2. Sequence installation of concrete formwork with related work specified in other sections to ensure that wall assemblies, including window and door accessories, trim, service penetrations, transition changes, and mechanical service are protected against damage from effects of weather, corrosion, and adjacent construction activity.

3.04 ERECTION / INSTALLATION / APPLICATION

A. Installation Procedures:
1. Installation of forms to be in strict accordance with manufacturer's product installation manual as supplied in evidence to contractor under Part 1 Section 1.05 of this Section.
2. The *trained installer* shall ensure all manufacturer's procedures for the following work are employed on site (as outlined in the manufacturer's product Installation manual) Additional to all required procedures being followed, the trained Installer shall specifically assure cross checks with respect to layout, leveling and vertical alignment are executed as noted below in each section:
a) First Course Placement – perform cross checks for accuracy of plan layout to survey pins, marks or grid lines as set by the contractor.
b) Horizontal Reinforcement Placement – assure reinforcement diameter, grade and positioning is accurate to engineering specifications on structural drawings and installed in correct axis of wall for each course placed.
c) Successive Course Placement – assure system is accurately leveled subsequent to 2nd course placement.
d) Door & Window Opening Construction – when specified, assure bucks have been prepared for anchorage with concrete and/or fitted with mesh attachments as may be required for subsequent exterior finishes such as acrylic stuccos or similar architectural coatings for non-combustible construction. *Trained Installer* shall also assure all top, bottom and stirrup steel fittings are installed per engineering specifications.
e) *Form Alignment System* /Installation – assure *Form Alignment System* is regularly checked for crew safety, anchorage to form system as specified, vertical alignment checks at both pre-placement of concrete as well.
f) Vertical Reinforcement Placement- assure reinforcement diameter, grade and positioning is accurate to engineering specifications on structural drawings and installed in correct axis of wall, prior to placement of concrete.
g) Pre-Concrete Placement Inspection- trained installer shall assure string lines are place at top of all pours and wall system aligned for placement, cross check and assure that all required service penetration sleeves, embed plates, anchor bolts, fittings, beam pocket preparations, as specified on drawings are in place prior to commencement of concrete placement.

h) Concrete Placement- trained installer shall assure concrete tickets retained for contractor records and that slump, strength and aggregate size are as specified per Section 2.04 of this Section. *Trained installer* to assure truck delivery timed for rate of placement and that placement does rate not exceed ACI recommended practices. *Trained installer* shall also assure that concrete during lift placement is mechanically and internally vibrated per ACI Standards to assure full monolithic concrete placement for all areas of formwork.

i) *Form Alignment System* and Scaffold Access Assembly, adjustment & removal. *Trained installer* shall assure entire wall lengths aligned to vertical plumb by string line and screeded to horizontal level as required for finished wall height prior to concrete set. Subsequent to initial concrete cure, contractor shall assure that scaffold access and *Form Alignment System* remains in place until removal is directed accordingly by engineer of record for the project.

B. Interface with Other Work:
   1. Service penetrations (electrical service conduits, water service pipes, air supply and exhaust ducts etc.) shall be installed at the required locations as indicated by the appropriate trade.
   2. Service penetrations exceeding 16” x 16” (400 mm x 400 mm) in area shall be reinforced per engineer specifications
   3. Prior to concrete placement, install service penetration sleeves (supplied by others) at designated locations to create voids for service placement at later date.
   4. Instructions for exterior finish application to be reviewed with each trade. Contractor shall contact *Trained Installer* for specific instructions where sub trade has insufficient information or specialty requirements not addressed in specification specific to ICF applications.

3.05 CLEANING

A. Waste Management
   1. Clean up and properly dispose of all debris remaining on job site related to the installation of the insulated concrete forms.

3.06 PROTECTION

A. Assure final finishes are installed over form product or provide temporary coverage of installation to reduce EPS foam surface exposure to ultra violet light should final finish application be delayed longer than 18 months after form product installation.
B. Consult with exterior finish contractor concerning exposure of EPS to ultraviolet light to ensure proper finish to ICF walls.

ATTACHMENTS FOLLOW ON NEXT PAGE

ATTACHMENTS

(A) SUMMARY OF SPECIFICED FORM UNIT THICKNESSSES AND DIMENSIONS

Product	Feature	4" (100mm)		6" (150mm)		8" (200mm)		10" (250mm)		12" (300mm)	
		inches	mm	inches	mm	inches	mm	inches	mm	inches	mm
Standard Form Unit	Length	96	2438	96	2438	96	2438	96	2438	96	2438
	Width	9 1/4	235	11 1/4	286	13 1/4	337	15 1/4	387	17 1/4	438
	Height	18	457	18	457	18	457	18	457	18	457
	EPS Thickness	2 5/8	67	2 5/8	67	2 5/8	67	2 5/8	67	2 5/8	67
90 Degree Form Unit	Length (a) (lng)	31 5/8	803	31 5/8	803	33 5/8	854	35 5/8	905	37 5/8	956
	Length (b) (sht)	15 5/8	397	15 5/8	397	17 5/8	448	19 5/8	498	21 5/8	549
	Width	9 1/4	235	11 1/4	286	13 1/4	337	15 1/4	387	17 1/4	438
	Height	18	457	18	457	18	455	18	455	18	455
45 Degree Form Unit	Length (a) (lng)	26 1/2	673	26 1/2	673	26 1/2	673	28 1/2	724	30 1/2	775
	Length (b) (sht)	10 1/2	267	10 1/2	267	10 1/2	267	12 1/2	318	14 1/2	368
	Width	9 1/4	235	11 1/4	286	13 1/4	337	15 1/4	387	17 1/4	438
	Height	18	457	18	457	18	457	18	457	18	457
One & Two Sided Tapered Top Form Units*	Length	48	1219	48	1219	48	1219	48	1219	48	1219
	Width	9 1/4	235	11 1/4	286	13 1/4	337	15 1/4	387	17 1/4	438
	Height	18	457	18	457	18	457	18	457	18	457
	EPS Thickness	2 5/8	67	2 5/8	67	2 5/8	67	2 5/8	67	2 5/8	67
Molded Brick Ledge*	Length	48	1219	48	1219	48	1219	48	1219	48	1219
	Width	9 1/4	235	11 1/4	286	13 1/4	337	15 1/4	387	17 1/4	438
	Height	18	457	18	457	18	457	18	457	18	457
T-Form Units (main and T-wall core thickness matching)	Lg. T Mn. Lgth	18	457	20	508	22	559	24	610	26	660
	Sh. T Mn. Lgth	50	1270	52	1321	54	1372	56	1422	58	1473
	Height	18	457	18	457	18	457	18	457	18	457
	EPS Thickness	2 5/8	67	2 5/8	67	2 5/8	67	2 5/8	67	2 5/8	67
Molded Brick Ledge & Tapered Top Unit	Length	48	1219	48	1219	48	1219	48	1219	48	1219
	Width	9 1/4	235	11 1/4	286	13 1/4	337	15 1/4	387	17 1/4	438
	Height	18	457	18	457	18	457	18	457	18	457
Brick Ledge Extension	Length	32	813	32	813	32	813	32	813	32	813
	Width	4 1/2	114	4 1/2	114	4 1/2	114	4 1/2	114	4 1/2	114
	Height	13 1/2	343	13 1/2	343	13 1/2	343	13 1/2	343	13 1/2	343
End Cap	Width	4 1/4	108	6 1/4	159	8 1/4	210	10 1/4	260	12 1/4	311
	Height	18	457	18	457	18	457	18	457	18	457
	EPS Thickness	2 5/8	67	2 5/8	67	2 5/8	67	2 5/8	67	2 5/8	67
	Fast. Strip Op.	YES		YES		YES		YES		YES	
Height Adjuster	Length	32	813	32	813	32	813	32	813	32	813
	Height	3	76	3	76	3	76	3	76	3	76
	Fast. Strip Op.	YES		YES		YES		YES		YES	

END OF SECTION 03 11 19

THIS PAGE LEFT INTENTIONALLY BLANK

SECTION 03360 - INTEGRALLY COLORED CONCRETE

PART 1 - GENERAL

1.1 SUMMARY

A. Drawings and general provisions of Contract, including General and Supplementary Conditions and Division 1 Specification sections, apply to Work of this Section.

B. Section Includes:
   1. Integrally colored concrete slabs-on-grade and other exterior concrete pavements].
   2. Curing of integrally colored concrete.

C. Related Sections:
   1. Division 3 Section "Cast-In-Place Concrete" for general applications of concrete and coordination of sample submittal [and color selection].
   2. Division 7 Section "Joint Sealants" for colored sealant for joints.

1.2 REFERENCES

A. American Concrete Institute (ACI):
   1. ACI 301 "Specification for Structural Concrete for Buildings."
   2. ACI 302 IR "Recommended Practice for Concrete Floor and Slab Construction."
   3. ACI 303.1 "Standard Specification for Cast-In-Place Architectural Concrete."
   4. ACI 304 "Recommended Practice for Measuring, Mixing, Transporting and Placing of Concrete."
   5. ACI 305R "Recommended Practice for Hot Weather Concreting."
   6. ACI 306R "Recommended Practice for Cold Weather Concreting."

B. American Society for Testing and Materials (ASTM):
   1. ASTM C309 "Liquid Membrane-Forming Compounds for Curing Concrete."
   2. ASTM C494 "Standard Specification for Chemical Admixtures for Concrete."
   3. ASTM C979 "Standard Specification for Pigments for Integrally Colored Concrete."

C. American Association of State Highway and Transportation Officials (AASHTO):
   1. AASHTO M194 "Chemical Admixtures."

1.3 SUBMITTALS

A. Product Data: Submit manufacturer’s complete technical data sheets for the following:
   1. Colored admixture.
   2. Curing compound.

B. Design Mixes: For each type of integrally colored concrete.

C. Samples for Initial Selection: Manufacturer's color charts showing full range of colors available.

D. Qualification Data: For firms indicated in "Quality Assurance" Article, including list of completed projects.

1.4 QUALITY ASSURANCE

A. Manufacturer Qualifications: Manufacturer with 10-years experience in the production of specified products.

B. Installer Qualifications: An installer with 5-years experience with work of similar scope and quality.

C. Comply with the requirements of ACI 301.

D. Obtain each specified material from same source and maintain high degree of consistency in workmanship throughout Project.

E. Notification of manufacturer's authorized representative shall be given at least 1-week before start of Work.

F. Integrally Colored Concrete Field Samples:
1. Provide under provisions of Division 1 Section "Quality Control."
2. At location on Project selected by Landscape Architect, place and finish 4 by 4 feet.
3. For accurate color, the quantity of concrete mixed to produce the sample should not be less than 3 cubic yards (or not less than 1/3 the capacity of the mixing drum on the ready-mix truck) and should always be in full cubic yard increments. Excess material shall be discarded according to local regulations.
4. Construct sample panel using processes and techniques intended for use on permanent work, including curing procedures. Include samples of control, construction, and expansion joints in sample panels. Field sample shall be produced by the individual workers who will perform the work for the Project.
5. Retain samples of cements, sands, aggregates and color additives used in mockup for comparison with materials used in remaining work.
6. Accepted field sample provides visual standard for work of Section.
7. Field sample shall remain through completion of work for use as a quality standard for finished work.
8. Remove field sample when directed.

1.5 DELIVERY, STORAGE AND HANDLING

A. Colored Admixture: Comply with manufacturer's instructions. Deliver colored admixtures in original, unopened packaging. Store in dry conditions.

1.6 PROJECT CONDITIONS

A. Integrally Colored Concrete Environmental Requirements:
   1. Schedule placement to minimize exposure to wind and hot sun before curing materials are applied.
   2. Avoid placing concrete if rain or frost is forecast within 24-hours. Protect fresh concrete from moisture and freezing.
   3. Comply with professional practices described in ACI 305R and ACI 306R.

B. Schedule delivery of concrete to provide consistent mix times from batching until discharge. Mix times shall meet manufacturer's written recommendations.

1.7 PRE-JOB CONFERENCE

A. One week prior to placement of integrally colored concrete a meeting will be held to discuss the Project and application materials.

B. It is suggested that the Landscape Architect, Subcontractor, Ready-Mix Concrete Representative, and a Manufacturer's Representative be present.

PART 2 - PRODUCTS

2.1 ACCEPTABLE MANUFACTURER

A. Sika Corporation, (800) 800-9900 or the appropriate local contact.

2.2 MATERIALS

A. Colored Admixture for Integrally Colored Concrete: CHROMIX® Admixtures for Color-Conditioned Concrete including CHROMIX P® Admixtures, CHROMIX G® Admixtures, or CHROMIX L® Admixtures; Sika Corporation.
   1. Admixture shall be a colored, water-reducing, admixture containing no calcium chloride with coloring agents that are lime-proof and ultra-violet resistant.
   2. Colored admixture shall conform to the requirements of ACI 303.1, ASTM C979, ASTM C494 and ASSHTO M194.
   3. Raw pigments are not an equivalent and may not be substituted.

B. Curing Compound for Integrally Colored Concrete: Curing compound shall comply with ASTM C309 and be of same manufacturer as colored admixture, for use with integrally colored concrete.
   1. Exterior Integrally Colored Concrete: LITHOCHROME® Colorwax™; Sika Corporation.. Use to cure exterior flatwork that will be allowed to cure naturally with only occasional maintenance.

2.3 COLORS

A. Concrete Color:
   1. Cement: Color shall be white.
   2. Sand: Color shall be locally available natural sand sample.]
   3. Aggregate: Concrete producer's standard aggregate complying with specifications.
   4. Colored Admixture: As selected by Landscape Architect from SikaColor-100P Chart.

2.4 CONCRETE MIX DESIGN

A. Minimum Cement Content: 5 sacks per cubic yard of concrete.

B. Slump of concrete shall be consistent throughout Project at 4-inches or less. At no time shall slump exceed 5-inches.

C. Do not add calcium chloride to mix as it causes mottling and surface discoloration.

D. Supplemental admixtures shall not be used unless approved by manufacturer.

E. Do not add water to the mix in the field.

F. Add colored admixture to concrete mix according to manufacturer's written instructions.

PART 3 - EXECUTION

3.1 INSTALLATION

A. Install concrete according to requirements of Division 3 Section "Cast-In-Place Concrete."

B. Do not add water to concrete mix in the field.

C. Surfaces shall be finished uniformly with the following finish:
   1. Broomed: Pull broom across freshly troweled concrete to produce medium texture in straight lines perpendicular to main line of traffic. Do not dampen brooms.
   2. Swirl: Float concrete. Work float flat on surface using pressure in swirling manner to produce series of uniform arcs and twists. Use aluminum or magnesium float to produce medium texture.
   3. Trowel: Precautions should be taken to ensure that the surface is uniformly troweled so that it will not be slippery. Do not over-trowel or burnish the surface.

3.2 CURING

A. Integrally Colored Concrete: Apply curing compound for integrally colored concrete according to manufacturer's instructions using manufacturer's recommended application techniques. Apply curing compound at consistent time for each pour to maintain close color consistency.

B. Curing compound shall be same color as the colored concrete and supplied by same manufacturer of the colored admixture.

C. Precautions shall be taken in hot weather to prevent plastic cracking resulting from excessively rapid drying at surface as described in CIP 5 *Plastic Shrinkage Cracking* published by the National Ready Mixed Concrete Association.

D. Do not cover concrete with plastic sheeting.

3.3 TOLERANCES

A. Minor variations in appearance of integrally colored concrete, which are similar to natural variations in color and appearance of uncolored concrete, are acceptable.

END OF SECTION

SECTION 042613 - MASONRY VENEER

PART 1 - GENERAL

1.1 SUMMARY

A. Section Includes:

1. Brick.
2. Mortar materials.
3. Ties and anchors.
4. Embedded flashing.
5. Accessories.
6. Mortar mixes.

1.2 ACTION SUBMITTALS

A. Product Data: For each type of product.

B. Samples: For each type and color of **brick and colored mortar**.

1.3 INFORMATIONAL SUBMITTALS

A. Material Certificates: For each type and size of product.

1.4 MOCKUPS

A. Sample Panels: Build sample panels to verify selections made under Sample submittals and to demonstrate aesthetic effects. Comply with requirements in Section 014000 "Quality Requirements" for mockups.

1. Build sample panels for **typical exterior wall**in sizes approximately **48 inches (1219 mm)** long by **48 inches (1219 mm) by full thickness**.

1.5 FIELD CONDITIONS

A. Cold-Weather Requirements: Do not use frozen materials or materials mixed or coated with ice or frost. Do not build on frozen substrates. Remove and replace unit masonry damaged by frost or by freezing conditions. Comply with cold-weather construction requirements contained in TMS 602.

B. Hot-Weather Requirements: Comply with hot-weather construction requirements contained in TMS 602.

PART 2 - PRODUCTS

2.1 UNIT MASONRY, GENERAL

A. Masonry Standard: Comply with TMS 602, except as modified by requirements in the Contract Documents.

B. Defective Units: Referenced masonry unit standards may allow a certain percentage of units to contain chips, cracks, or other defects exceeding limits stated. Do not use units where such defects will be exposed in the completed Work **and will be within 20 ft. (6 m) vertically and horizontally of a walking surface**.

2.2 BRICK

A. General: Provide shapes indicated and as follows, with exposed surfaces matching finish and color of exposed faces of adjacent units:

1. For ends of sills and caps and for similar applications that would otherwise expose unfinished brick surfaces, provide units without cores or frogs and with exposed surfaces finished.
2. Provide special shapes for applications where shapes produced by sawing would result in sawed surfaces being exposed to view.

B. Clay Face Brick: **Facing brick complying with ASTM C216**, **Grade SW**, **Type FBS**.

1. Basis-of-Design Product: Cherokee Brick: **Cherokee Rose, Modular (2-1/4 x 3-5/8 x 7-5/8 (Macon Plant)**
2. Initial Rate of Absorption: Less than 30 g/30 sq. in. (30 g/194 sq. cm) per minute when tested in accordance with ASTM C67/C67M.
3. Efflorescence: Provide brick that has been tested in accordance with ASTM C67/C67M and is rated "not effloresced."
4. Provide a Norman size brick at the downspout locations Size (Actual Dimensions): **2-1/4 x 3-5/8 x 11-5/8 inches** long.

2.3 MOTAR MATERIALS

A. Preblended Dry Mortar Mix: Packaged blend made from **portland cement and hydrated lime or masonry cement**, sand, **mortar pigments,** and admixtures and complying with ASTM C1714/C1714M.

1. Preblended Dry Portland Cement Mortar Mix:

   a. Spec Mix,LLC (Basis of Design).

2. Preblended Dry Masonry Cement Mortar Mix:
   a. Spec Mix,LLC (Basis of Design).

B. Aggregate for Mortar: ASTM C144.

1. White-Mortar Aggregates: Natural white sand or crushed white stone.
2. Colored-Mortar Aggregates: Natural sand or crushed stone of color necessary to produce required mortar color.

C. Cold-Weather Admixture: Nonchloride, noncorrosive, accelerating admixture complying with **ASTM C494/C494M, Type C**, **ASTM C138,** and recommended by manufacturer for use in masonry mortar of composition

D. Water: Potable.

2.4 TIES AND ANCHORS

A. General: Ties and anchors extend at least 1-1/2 inches (38 mm) into veneer but with at least a 5/8-inch (16-mm) cover on outside face.

B. Materials: Provide ties and anchors specified in this article that are made from materials that comply with the following unless otherwise indicated:

1. Hot-Dip Galvanized, Carbon-Steel Wire: ASTM A1064/A1064M, with ASTM A153/A153M, Class B-2 coating.
2. Stainless Steel Wire: ASTM A580/A580M, **Type 304**.
3. Steel Sheet, Galvanized after Fabrication: ASTM A1008/A1008M, Commercial Steel, with ASTM A153/A153M, Class B coating.

C. Adjustable Anchors for Connecting to Structural Steel Framing: Provide anchors that allow vertical or horizontal adjustment but resist tension and compression forces perpendicular to plane of wall.

1. Anchor Section for Welding to Steel Frame: Crimped 1/4-inch- (6.4-mm-) diameter, **hot-dip galvanized steel** wire.
2. Tie Section: Triangular-shaped wire tie made from **0.187-inch- (4.76-mm-)hot-dip galvanized steel** wire.

D. Adjustable Masonry-Veneer Anchors:

1. General: Provide anchors that allow vertical adjustment but resist a 100 lbf (445 N) load in both tension and compression perpendicular to plane of wall without deforming or developing play in excess of 1/16 inch (1.6 mm).
2. Fabricate sheet metal anchor sections and other sheet metal parts from **0.0785-inch- (1.99-mm-) thick steel sheet, galvanized after fabrication**.
3. Fabricate wire ties from **0.187-inch- (4.76-mm-)**wire unless otherwise indicated.
4. Masonry-Veneer Anchors; Vertical Slotted L-Plate: Rib-stiffened, sheet metal anchor section with screw holes at top and bottom, projecting vertical leg with slotted hole for wire tie **and washer at face of insulation**.

    a. Manufacturer's include but are not limited to the following
        1) Hohman and Barnard

2) Prosoco – Masonry Veneer Tie (Basis of Design)
3) Wire Bond

5. Stainless Steel Drill Screws for Steel Studs: ASTM C954 except manufactured with hex washer head and neoprene or EPDM washer, No. 10 (4.83 mm) diameter by length required to penetrate steel stud flange with not less than three exposed threads; either made from Type 410 stainless steel or made with a carbon-steel drill point and 300 Series stainless steel shank.

2.5 EMBEDDED FLASHING

A. Metal Flashing: Provide metal flashing complying with SMACNA's "Architectural Sheet Metal Manual" and as follows:

B. Flexible Flashing: Use **one of** the following unless otherwise indicated:

1. Copper Fabric Flashing: **5 oz./sq. ft. (1.5 kg/sq. m) self-adhesive** copper sheet bonded between two layers of glass-fiber cloth. Use only where flashing is fully concealed in masonry.

2. Manufacturer’s include but are not limited to the following:
   a. Wire-Bond # 4150 (Basis of Design).

2.6 ACCESSORIES

A. Compressible Filler: Premolded filler strips complying with ASTM D1056, Grade 2A1; compressible up to 35 percent; of width and thickness indicated; formulated from **neoprene**.

B. Weep/Vent Products: Use **one of** the following unless otherwise indicated:
1. Cellular Plastic Weep/Vent: One-piece, flexible extrusion made from UV-resistant polypropylene copolymer, full height and width of head joint and depth 1/8 inch (3.2 mm) less than depth of outer wythe, in color selected from manufacturer's standard.

   a. <Double click here to find, evaluate, and insert list of manufacturers and products.>

C. Cavity Drainage Material: Free-draining mesh, made from polymer strands that will not degrade within the wall cavity.

1. Mortar Deflector: Strips, **full depth of cavity**that prevent clogging with mortar droppings.
2. Manufacturer’s include but are not limited to the following:
   a. Mortar Net.
   b. Wire-Bond. (Basis of Design)

D. Proprietary Acidic Masonry Cleaner: Manufacturer's standard-strength cleaner designed for removing mortar/grout stains, efflorescence, and other new construction stains from new masonry without discoloring or damaging masonry surfaces. Use product expressly approved for intended use by cleaner manufacturer and manufacturer of masonry units being cleaned.

1. Prosoco SureKlen 101 Lime Solvent. (Basis of Design).

2. NMD Masonry Detergent.

PART 3 - EXECUTION

3.1 INSTALLATION, GENERAL

A. Use full-size units without cutting if possible. If cutting is required to provide a continuous pattern or to fit adjoining construction, cut units with motor-driven saws; provide clean, sharp, unchipped edges. Allow units to dry before laying unless wetting of units is specified. Install cut units with cut surfaces and, where possible, cut edges concealed.

B. Select and arrange units for exposed unit masonry to produce a uniform blend of colors and textures. Mix units from several pallets or cubes as they are placed.

C. Wetting of Brick: Wet brick before laying if initial rate of absorption exceeds 30 g/30 sq. in. (30 g/194 sq. cm) per minute when tested in accordance with ASTM C67/C67M. Allow units to absorb water so they are damp but not wet at time of laying.

3.2 TOLERANCES

A. Dimensions and Locations of Elements:

1. For dimensions in cross section or elevation, do not vary by more than plus 1/2 inch (13 mm) or minus 1/4 inch (6.4 mm).
2. For location of elements in plan, do not vary from that indicated by more than plus or minus 1/2 inch (13 mm).
3. For location of elements in elevation, do not vary from that indicated by more than plus or minus 1/4 inch (6.4 mm) in a story height or 1/2 inch (13 mm) total.

B. Lines and Levels:

1. For bed joints and top surfaces of bearing walls, do not vary from level by more than 1/4 inch in 10 ft. (6.4 mm in 3 m), or 1/2-inch (13-mm) maximum.
2. For conspicuous horizontal lines, such as lintels, sills, parapets, and reveals, do not vary from level by more than 1/8 inch in 10 ft. (3.2 mm in 3 m), 1/4 inch in 20 ft. (6.4 mm in 6 m), or 1/2-inch (13-mm) maximum.
3. For vertical lines and surfaces, do not vary from plumb by more than 1/4 inch in 10 ft. (6.4 mm in 3 m), 3/8 inch in 20 ft. (10 mm in 6 m), or 1/2-inch (13-mm) maximum.
4. For conspicuous vertical lines, such as external corners, door jambs, reveals, and expansion and control joints, do not vary from plumb by more than 1/8 inch in 10 ft. (3.2 mm in 3 m), 1/4 inch in 20 ft. (6.4 mm in 6 m), or 1/2-inch (13-mm) maximum.
5. For lines and surfaces, do not vary from straight by more than 1/4 inch in 10 ft. (6.4 mm in 3 m), 3/8 inch in 20 ft. (10 mm in 6 m), or 1/2-inch (13-mm) maximum.

C. Joints:

1. For bed joints, do not vary from thickness indicated by more than plus or minus 1/8 inch (3.2 mm), with a maximum thickness limited to 1/2 inch (13 mm).
2. For exposed head joints, do not vary from thickness indicated by more than plus or minus 1/8 inch (3.2 mm). **Do not vary from adjacent bed-joint and head-joint thicknesses by more than 1/8 inch (3.2 mm).**

3.3 LAYING MASONRY WALLS

A. Lay out walls in advance for accurate spacing of surface bond patterns with uniform joint thicknesses and for accurate location of openings, movement-type joints, returns, and offsets. Avoid using less-than-half-size units, particularly at corners, jambs, and, where possible, at other locations.

B. Bond Pattern for Exposed Masonry: Unless otherwise indicated, lay exposed masonry in **running bond**; do not use units with less-than-nominal 4-inch (102-mm) horizontal face dimensions at corners or jambs.

C. Fill space between steel frames and masonry solidly with mortar unless otherwise indicated.

3.4 MORTAR BEDDING AND JOINTING

A. Lay masonry units with completely filled bed and head joints; butter ends with sufficient mortar to fill head joints and shove into place. Do not deeply furrow bed joints or slush head joints.

B. Tool exposed joints slightly concave when thumbprint hard, using a jointer larger than joint thickness unless otherwise indicated.

3.5 ANCHORED MASONRY VENEERS

A. Anchor masonry veneers to **wall framing** with masonry-veneer anchors to comply with the following requirements:

1. Fasten **screw-attached** anchors **through sheathing to wall framing and to concrete and masonry backup** with metal fasteners of type indicated. Use two fasteners unless anchor design only uses one fastener.
2. Embed **connector sections and continuous wire** in masonry joints.
3. Locate anchor sections to allow maximum vertical differential movement of ties up and down.
4. Space anchors as indicated, but not more than 16 inches (406 mm) o.c. vertically and 25 inches (635 mm) o.c. horizontally, with not less than one anchor for each **2.67 sq. ft. (0.25 sq. m)** of wall area. Install additional anchors within 12 inches (305 mm) of openings and at intervals, not exceeding 36 inches (914 mm), around perimeter.

B. Provide not less than **2 inches (51 mm)** of airspace between back of masonry veneer and face of [**sheathing**] [**insulation**].

3.6 FLASHING, WEEP HOLES, AND VENTS

A. General: Install embedded flashing and weep holes in masonry at shelf angles, lintels, ledges, other obstructions to downward flow of water in wall, and where indicated. **Install vents at shelf angles, ledges, and other obstructions to upward flow of air in cavities, and where indicated.**

B. Install flashing as follows unless otherwise indicated:

1. Prepare masonry surfaces so they are smooth and free from projections that could puncture flashing. Where flashing is within mortar joint, place through-wall flashing on sloping bed of mortar and cover with mortar. Before covering with mortar, seal penetrations in flashing with adhesive, sealant, or tape **as recommended by flashing manufacturer**.
2. Extend flashing through veneer, across airspace behind veneer, and up face of sheathing at least 8 inches (203 mm); with upper edge tucked under **water-resistive barrier** [**air barrier**, lapping at least 4 inches (102 mm).
3. At lintels and shelf angles, extend flashing 6 inches (152 mm) minimum**, to edge of next full unit** at each end. At heads and sills, extend flashing 6 inches (152 mm) minimum[**, to edge of next full unit**] and turn ends up not less than 2 inches (51 mm) to form end dams.

C. Install weep holes in veneers in head joints of first course of masonry immediately above embedded flashing.

1. Use **specified weep/cavity vent products** to form weep holes.
2. Space weep holes 24 inches (610 mm) o.c. unless otherwise indicated.

D. Place cavity drainage material in airspace behind veneers to comply with configuration requirements for cavity drainage material in "Accessories" Article.

3.7 FIELD QUALITY CONTROL

A. Testing Agency: Owner will engage a qualified testing agency to perform tests and inspections. Allow inspectors access to scaffolding and work areas as needed to perform tests and inspections. Retesting of materials that fail to comply with specified requirements will be at Contractor's expense.

B. Inspections: Special inspections in accordance with Level 2 in TMS 402.

1. Begin masonry construction only after inspectors have verified proportions of site-prepared mortar.

3.8 CLEANING

A. In-Progress Cleaning: Clean unit masonry as work progresses by dry brushing to remove mortar fins and smears before tooling joints.

B. Final Cleaning: After mortar is thoroughly set and cured, clean exposed masonry as follows:

1. Test cleaning methods on sample wall panel; leave one-half of panel uncleaned for comparison purposes. Obtain Architect's approval of sample cleaning before proceeding with cleaning of masonry.
2. Protect adjacent stone and non-masonry surfaces from contact with cleaner by covering them with liquid strippable masking agent or polyethylene film and waterproof masking tape.
3. Wet wall surfaces with water before applying cleaners; remove cleaners promptly by rinsing surfaces thoroughly with clear water.
4. Clean brick by bucket-and-brush hand-cleaning method described in BIA Technical Notes 20.

3.9 MASONRY WASTE DISPOSAL

A. Waste Disposal as Fill Material: Dispose of clean masonry waste, including excess or soil-contaminated sand, waste mortar, and broken masonry units, by crushing and mixing with fill material as fill is placed.

1. Do not dispose of masonry waste as fill within 18 inches (457 mm) of finished grade.

B. Excess Masonry Waste: Remove excess clean masonry waste that cannot be used as fill, as described above or recycled, and other masonry waste, and legally dispose of off Owner's property.

END OF SECTION 042613

SECTION 047200 - CAST STONE MASONRY

PART 1 - GENERAL

1.1 SUMMARY

A. Section Includes:

1. Cast-stone trim/caps.
2. Cast-stone sills.

1.2 ACTION SUBMITTALS

A. Product Data: For each type of product.

1. For cast-stone units, include dimensions and finishes.

B. Shop Drawings: Show fabrication and installation details for cast-stone units. Include dimensions, details of reinforcement and anchorages if any, and indication of finished faces.

C. Samples:

1. For each color and texture of cast stone required.
2. For colored mortar.

1.3 INFORMATIONAL SUBMITTALS

A. Qualification Data: For manufacturer.

B. Material Test Reports: For each mix required to produce cast stone, based on testing according to ASTM C 1364.

1.4 QUALITY ASSURANCE

A. Manufacturer Qualifications: A qualified manufacturer of cast-stone units similar to those indicated for this Project, that has sufficient production capacity to manufacture required units, and is a plant certified by the Architectural Precast Association.

PART 2 - PRODUCTS (Basis of Design: Olde World Cast Stone: Wall Coping (WC 245), Window Sill (WS-229)

2.1 CAST-STONE UNITS

A. Cast-Stone Units: Comply with ASTM C 1364.

1. Units shall be manufactured using the vibrant dry tamp method.
2. Units shall be resistant to freezing and thawing as determined by laboratory testing according to ASTM C 666/C 666M, Procedure A, as modified by ASTM C 1364.

B. Fabricate units with sharp arris and accurately reproduced details, with indicated texture on all exposed surfaces unless otherwise indicated.

1. Slope exposed horizontal surfaces 1:12 to drain unless otherwise indicated.
2. Provide raised fillets at backs of sills and at ends indicated to be built into jambs.
3. Provide drips on projecting elements unless otherwise indicated.

C. Cure Units as Follows:

1. Cure units in enclosed, moist curing room at 95 to 100 percent relative humidity and temperature of 100 deg F (38 deg C) for 12 hours or 70 deg F (21 deg C) for 16 hours.
2. Keep units damp and continue curing to comply with one of the following:

a. No fewer than five days at mean daily temperature of 70 deg F (21 deg C) or above.
b. No fewer than six days at mean daily temperature of 60 deg F (16 deg C) or above.
c. No fewer than seven days at mean daily temperature of 50 deg F (10 deg C) or above.
d. No fewer than eight days at mean daily temperature of 45 deg F (7 deg C) or above.

D. Acid etch units after curing to remove cement film from surfaces to be exposed to view.

E. Colors and Textures: As selected by Architect from manufacturer's full range.

2.2 ACCESSORIES

A. Anchors: Type and size indicated, fabricated from Type 304 stainless steel complying with ASTM A 276.

B. Dowels: 1/2-inch- (12-mm-) diameter round bars, fabricated from Type 304 stainless steel complying with ASTM A 276.

C. Proprietary Acidic Cleaner: Manufacturer's standard-strength cleaner designed for removing mortar/grout stains, efflorescence, and other new construction stains from new masonry without discoloring or damaging masonry surfaces. Use product expressly approved for intended use by

cast-stone manufacturer and expressly approved by cleaner manufacturer for use on cast stone and adjacent masonry materials.

2.3 MORTAR

A. Comply with requirements in Section 042000 "Unit Masonry" for mortar mixes.

2.4 SOURCE QUALITY CONTROL

A. Engage a qualified independent testing agency to sample and test cast-stone units according to ASTM C 1364.

1. Include one test for resistance to freezing and thawing.

PART 3 - EXECUTION

3.1 SETTING CAST STONE IN MORTAR

A. Install cast-stone units to comply with requirements in Section 042000 "Unit Masonry."

B. Set units in full bed of mortar with full head joints unless otherwise indicated.

1. Fill dowel holes and anchor slots with mortar.
2. Fill collar joints solid as units are set.
3. Build concealed flashing into mortar joints as units are set.
4. Keep head joints in copings and between other units with exposed horizontal surfaces open to receive sealant.
5. Keep joints at shelf angles open to receive sealant.

C. Rake out joints for pointing with mortar to depths of not less than 3/4 inch (19 mm). Rake joints to uniform depths with square bottoms and clean sides. Scrub faces of units to remove excess mortar as joints are raked.

D. Point mortar joints by placing and compacting mortar in layers not greater than 3/8 inch (10 mm). Compact each layer thoroughly and allow it to become thumbprint hard before applying next layer.

E. Tool exposed joints slightly concave when thumbprint hard. Use a smooth plastic jointer larger than joint thickness.

F. Rake out joints for pointing with sealant to depths of not less than 3/4 inch (19 mm). Scrub faces of units to remove excess mortar as joints are raked.

G. Provide sealant joints at head joints of copings and other horizontal surfaces; at expansion, control, and pressure-relieving joints; and at locations indicated.

1. Keep joints free of mortar and other rigid materials.
2. Prepare and apply sealant of type and at locations indicated to comply with applicable requirements in Section 079200 "Joint Sealants."

3.2 SETTING ANCHORED CAST STONE WITH SEALANT-FILLED JOINTS

A. Set cast stone as indicated on Drawings. Set units accurately in locations indicated, with edges and faces aligned according to established relationships and indicated tolerances.

1. Install anchors, supports, fasteners, and other attachments indicated or necessary to secure units in place.
2. Shim and adjust anchors, supports, and accessories to set cast stone in locations indicated with uniform joints.

B. Fill anchor holes with sealant.

1. Where dowel holes occur at pressure-relieving joints, provide compressible material at ends of dowels.

C. Set cast stone supported on clip or continuous angles on resilient setting shims. Use material of thickness required to maintain uniform joint widths. Hold shims back from face of cast stone a distance at least equal to width of joint.

D. Prepare and apply sealant of type and at locations indicated to comply with applicable requirements in Section 079200 "Joint Sealants."

3.3 INSTALLATION TOLERANCES

A. Variation from Plumb: Do not exceed 1/8 inch in 10 feet (3 mm in 3 m), 1/4 inch in 20 feet (6 mm in 6 m), or 1/2 inch (12 mm) maximum.

B. Variation from Level: Do not exceed 1/8 inch in 10 feet (3 mm in 3 m), 1/4 inch in 20 feet (6 mm in 6 m), or 1/2 inch (12 mm) maximum.

C. Variation in Joint Width: Do not vary joint thickness more than 1/8 inch in 36 inches (3 mm in 900 mm) or one-fourth of nominal joint width, whichever is less.

D. Variation in Plane between Adjacent Surfaces (Lipping): Do not vary from flush alignment with adjacent units or adjacent surfaces indicated to be flush with units by more than 1/16 inch (1.5 mm), except where variation is due to warpage of units within tolerances specified.

3.4 ADJUSTING AND CLEANING

A. Remove and replace stained and otherwise damaged units and units not matching approved Samples. Cast stone may be repaired if methods and results are approved by Architect.

B. Replace units in a manner that results in cast stone matching approved Samples, complying with other requirements, and showing no evidence of replacement.

C. In-Progress Cleaning: Clean cast stone as work progresses.

1. Remove mortar fins and smears before tooling joints.
2. Remove excess sealant immediately, including spills, smears, and spatter.

D. Final Cleaning: After mortar is thoroughly set and cured, clean exposed cast stone as follows:

1. Remove large mortar particles by hand with wooden paddles and nonmetallic scrape hoes or chisels.
2. Test cleaning methods on sample; leave one sample uncleaned for comparison purposes. Obtain Architect's approval of sample cleaning before proceeding with cleaning of cast stone.
3. Protect adjacent surfaces from contact with cleaner by covering them with liquid strippable masking agent or polyethylene film and waterproof masking tape.
4. Wet surfaces with water before applying cleaners; remove cleaners promptly by rinsing thoroughly with clear water.
5. Clean cast stone by bucket-and-brush hand-cleaning method described in BIA Technical Notes 20.
6. Clean cast stone with proprietary acidic cleaner applied according to manufacturer's written instructions.

END OF SECTION 047200

THIS PAGE LEFT INTENTIONALLY BLANK

SECTION 055000 - METAL FABRICATIONS

1.1 SUMMARY

A. Section Includes:
1. Metal bollards.

1.2 ACTION SUBMITTALS

A. Product Data: For the following:
1. Paint products.

PART 2 - PRODUCTS

2.1 METALS

A. Metal Surfaces, General: Provide materials with smooth, flat surfaces unless otherwise indicated. For metal fabrications exposed to view in the completed Work, provide materials without seam marks, roller marks, rolled trade names, or blemishes.

B. Steel Pipe: ASTM A 53/A 53M, Standard Weight (Schedule 40) unless otherwise indicated.

C. Cast-in-Place Anchors in Concrete: Either threaded type or wedge type unless otherwise indicated; galvanized ferrous castings, either ASTM A 47/A 47M malleable iron or ASTM A 27/A 27M cast steel. Provide bolts, washers, and shims as needed, all hot-dip galvanized per ASTM F 2329.

2.2 MISCELLANEOUS MATERIALS

A. Epoxy Zinc-Rich Primer: Complying with MPI#20 and compatible with topcoat.

B. Bituminous Paint: Cold-applied asphalt emulsion complying with ASTM D 1187/D 1187M. Use where bollards are in contact with concrete.

C. Non-shrink, Nonmetallic Grout: Factory-packaged, non-staining, noncorrosive, nongaseous grout complying with ASTM C 1107/C 1107M. Provide grout specifically recommended by manufacturer for interior and exterior applications.

D. Concrete: Comply with requirements in Section 033000 "Cast-in-Place Concrete" for normal-weight, air-entrained, concrete with a minimum 28-day compressive strength of 3000 psi (20 MPa).

2.3 FABRICATION, GENERAL

A. Shop Assembly: Preassemble items in the shop to greatest extent possible. Use connections that maintain structural value of joined pieces.

B. Cut, drill, and punch metals cleanly and accurately. Remove burrs and ease edges. Remove sharp or rough areas on exposed surfaces.

C. Weld corners and seams continuously to comply with the following:

1. Use materials and methods that minimize distortion and develop strength and corrosion resistance of base metals.
2. Obtain fusion without undercut or overlap.
3. Remove welding flux immediately.
4. At exposed connections, finish exposed welds and surfaces smooth and blended.

D. Form exposed connections with hairline joints, flush and smooth, using concealed fasteners or welds where possible. Locate joints where least conspicuous.

E. Fabricate seams and other connections that are exposed to weather in a manner to exclude water. Provide weep holes where water may accumulate.

F. Where units are indicated to be cast into concrete or built into masonry, equip with integrally welded steel strap anchors not less than 8 inches (200 mm) from ends and corners of units and 24 inches (600 mm) o.c.

2.4 METAL BOLLARDS

A. Fabricate metal bollards from **Schedule 40 steel pipe 1/4-inch (6.4-mm) wall-thickness steel shapes, as indicated**.

B. Prime bollards with **zinc-rich primer.**

2.5 FINISHES, GENERAL

A. Finish metal fabrications after assembly.

2.6 STEEL AND IRON FINISHES

A. Shop prime iron and steel items.

1. Shop prime with epoxy zinc rich primer.

B. Preparation for Shop Priming: Prepare surfaces to comply with **SSPC-SP 6/NACE No. 3, "Commercial Blast Cleaning.", SSPC-SP 3, "Power Tool Cleaning." requirements indicated below:**]
1. Items Indicated to Receive Zinc-Rich Primer: SSPC-SP 6/NACE No. 3, "Commercial Blast Cleaning."

C. Shop Priming: Apply shop primer to comply with SSPC-PA 1, "Paint Application Specification No. 1: Shop, Field, and Maintenance Painting of Steel," for shop painting.

PART 3 - EXECUTION

3.1 INSTALLATION, GENERAL

A. Cutting, Fitting, and Placement: Perform cutting, drilling, and fitting required for installing metal fabrications. Set metal fabrications accurately in location, alignment, and elevation; with edges and surfaces level, plumb, true, and free of rack; and measured from established lines and levels.

B. Fit exposed connections accurately together to form hairline joints. Weld connections that are not to be left as exposed joints but cannot be shop welded because of shipping size limitations. Do not weld, cut, or abrade surfaces of exterior units that have been hot-dip galvanized after fabrication and are for bolted or screwed field connections.

C. Field Welding: Comply with the following requirements:

1. Use materials and methods that minimize distortion and develop strength and corrosion resistance of base metals.
2. Obtain fusion without undercut or overlap.
3. Remove welding flux immediately.
4. At exposed connections, finish exposed welds and surfaces smooth and blended so no roughness shows after finishing and contour of welded surface matches that of adjacent surface.

D. Fastening to In-Place Construction: Provide anchorage devices and fasteners where metal fabrications are required to be fastened to in-place construction.

E. Provide temporary bracing or anchors in formwork for items that are to be built into concrete, masonry, or similar construction.

3.2 INSTALLING METAL BOLLARDS

A. Fill metal-bollards solidly with concrete and allow concrete to cure seven days before installing.

B. Anchor bollards in concrete **with pipe sleeves preset and anchored into concrete.** Fill annular space around bollard solidly with non-shrink grout.

C. Anchor bollards in place with concrete footings. Place concrete and vibrate or tamp for consolidation. Support and brace bollards in position until concrete has cured.

D. Fill bollards solidly with concrete, mounding top surface to shed water.

3.3 ADJUSTING AND CLEANING

A. Touchup Painting: Immediately after erection, clean field welds, bolted connections, and abraded areas. Paint uncoated and abraded areas with the same material as used for shop painting to comply with SSPC-PA 1 for touching up shop-painted surfaces.

END OF SECTION 055000

THIS PAGE LEFT INTENTIONALLY BLANK

SECTION 055113 - METAL PAN STAIRS

PART 1 - GENERAL

1.1 SUMMARY

A. Section Includes:

1. Preassembled steel stairs with **concrete-filled** treads.
2. **Steel tube** railings and guards attached to metal stairs.
3. **Steel tube** handrails attached to walls adjacent to metal stairs.

1.2 COORDINATION

A. Coordinate selection of shop primers with topcoats to be applied over them. Comply with paint and coating manufacturers' written instructions to ensure that shop primers and topcoats are compatible with one another.

1.3 ACTION SUBMITTALS

A. Product Data: For metal pan stairs and the following:
1. Welded-wire mesh.
2. Prefilled metal-pan-stair treads.
3. Shop primer products.
4. Handrail wall brackets.
5. Grout.

B. Shop Drawings:

1. Include plans, elevations, sections, details, and attachments to other work.
2. Indicate sizes of metal sections, thickness of metals, profiles, holes, and field joints.
3. Include plan at each level.
4. Indicate locations of anchors, weld plates, and blocking for attachment of wall-mounted handrails.

C. Delegated-Design Submittal: For stairs [**railings, and guards**, including analysis data signed and sealed by a Florida Licensed Professional Engineer responsible for their preparation.

1.4 INFORMATIONAL SUBMITTALS

A. Qualification Data: For professional engineer's experience with providing delegated-design engineering services of the kind indicated, including documentation that engineer is licensed in the **State** of Florida.

B. Welding certificates.

1.5 QUALITY ASSURANCE

A. Welding Qualifications: Qualify procedures and personnel according to the following:

1. AWS D1.1/D1.1M, "Structural Welding Code - Steel."
2. AWS D1.3/D1.3M, "Structural Welding Code - Sheet Steel."

PART 2 - PRODUCTS

2.1 PERFORMANCE REQUIREMENTS

A. Delegated Design: Engage a qualified professional engineer, as defined in Section 014000 "Quality Requirements," to design stairs, [**railings, and guards** including attachment to building construction.

B. Structural Performance of Stairs: Metal stairs shall withstand the effects of gravity loads and the following loads and stresses within limits and under conditions indicated:

1. Uniform Load: 100 lbf/sq. ft. (4.79 kN/sq. m).
2. Concentrated Load: 300 lbf (1.33 kN) applied on an area of 4 sq. in. (2580 sq. mm).
3. Uniform and concentrated loads need not be assumed to act concurrently.
4. Stair Framing: Capable of withstanding stresses resulting from railing and guard loads in addition to loads specified above.
5. Limit deflection of treads, platforms, and framing members to **L/360** or 1/4 inch (6.4 mm), whichever is less.

C. Structural Performance of Railings and Guards: Railings and guards, including attachment to building construction, shall withstand the effects of gravity loads and the following loads and stresses within limits and under conditions indicated:

1. Handrails and Top Rails of Guards:
   a. Uniform load of 50 lbf/ft. (0.73 kN/m) applied in any direction.
   b. Concentrated load of 200 lbf (0.89 kN) applied in any direction.
   c. Uniform and concentrated loads need not be assumed to act concurrently.
2. Infill of Guards:
   a. Concentrated load of 50 lbf (0.22 kN) applied horizontally on an area of 1 sq. ft. (0.093 sq. m).
   b. Infill load and other loads need not be assumed to act concurrently.
3. Thermal Movements: Allow for thermal movements from ambient and surface temperature changes.

a. Temperature Change: **120 deg F (67 deg C), ambient; 180 deg F (100 deg C), material surfaces**.

2.2 METALS

A. Steel Plates, Shapes, and Bars: ASTM A36/A36M.

B. Steel Tubing for Railings and Guards: **ASTM A500/A500M (cold formed)**.

C. Steel Pipe for Railings and Guards: ASTM A53/A53M, Type F or Type S, Grade A, Standard Weight (Schedule 40), unless another grade and weight are required by structural loads.

D. Uncoated, Cold-Rolled Steel Sheet: ASTM A1008/A1008M, **either commercial steel, Type B, or** structural steel, Grade 25 (Grade 170), unless another grade is required by design loads; exposed.

E. Uncoated, Hot-Rolled Steel Sheet: ASTM A1011/A1011M,[**either commercial steel, Type B, or**] structural steel, Grade 30 (Grade 205), unless another grade is required by design loads.
1. Nosings: Square-back units, **1-7/8 inches (48 mm)** wide, without lip.

F. Provide anchors for embedding units in concrete, either integral or applied to units, as standard with manufacturer.

G. Apply bituminous paint to concealed surfaces of cast-metal units set into concrete.

H. Apply clear lacquer to concealed surfaces of extruded units set into concrete.

2.3 FASTENERS

A. General: Provide **Type 304 stainless steel fasteners for exterior use and zinc-plated fasteners with coating complying with ASTM B633 or ASTM F1941/F1941M, Class Fe/Zn 5** where built into exterior walls.

1. Select fasteners for type, grade, and class required.

B. Fasteners for Anchoring Railings and Guards to Other Construction: Select fasteners of type, grade, and class required to produce connections suitable for anchoring railings and guards to other types of construction indicated **and capable of withstanding design loads**.

C. Post-Installed Anchors: **Torque-controlled expansion anchors or chemical anchors** capable of sustaining, without failure, a load equal to six times the load imposed when installed in unit masonry and four times the load imposed when installed in concrete, as determined by testing according to ASTM E488/E488M, conducted by a qualified independent testing agency.

1. Material for Interior Locations: Carbon-steel components zinc plated to comply with ASTM B633 or ASTM F1941/F1941M, Class Fe/Zn 5, unless otherwise indicated.

2.4 MISCELLANEOUS MATERIALS

A. Handrail Wall Brackets: **Cast stainless steel,** center of rail **2-1/2 inches (63.5 mm)** from face of wall.

B. Universal Shop Primer: Fast-curing, lead- and chromate-free, universal modified-alkyd primer complying with MPI#79 and compatible with topcoat.

1. Use primer containing pigments that make it easily distinguishable from zinc-rich primer.

C. Bituminous Paint: Cold-applied asphalt emulsion complying with ASTM D1187/D1187M.

D. Nonmetallic, Shrinkage-Resistant Grout: ASTM C1107/C1107M, factory-packaged, nonmetallic aggregate grout; recommended by manufacturer for **interior** use; noncorrosive and non-staining; mixed with water to consistency suitable for application and a 30-minute working time.

1. Non-slip-Aggregate Concrete Finish: Factory-packaged abrasive aggregate made from fused, aluminum-oxide grits or crushed emery; rustproof and nonglazing; unaffected by freezing, moisture, or cleaning materials.
2. Plain Steel Welded-Wire Reinforcement: ASTM A1064/A10645M, **steel,** 6 by 6 inches (152 by 152 mm), W1.4 by W1.4, unless otherwise indicated on Drawings.
3. Reinforcement Supports: Bolsters, chairs, spacers, and other devices for spacing, supporting, and fastening welded-wire reinforcement in place.
    a. Manufacture bar supports from steel wire, plastic, or precast concrete according to CRSI's "Manual of Standard Practice," of greater compressive strength than concrete.

2.5 FABRICATION, GENERAL

A. Provide complete stair assemblies, including metal framing, hangers, struts, **railings, and guards,** clips, brackets, bearing plates, and other components necessary to support and anchor stairs and platforms on supporting structure.

1. Join components by welding unless otherwise indicated.
2. Use connections that maintain structural value of joined pieces.

B. Assemble stairs**, railings, and guards** in shop to greatest extent possible.

1. Disassemble units only as necessary for shipping and handling limitations.
2. Clearly mark units for reassembly and coordinated installation.

C. Cut, drill, and punch metals cleanly and accurately.

1. Remove burrs and ease edges to a radius of approximately 1/32 inch (1 mm) unless otherwise indicated.
2. Remove sharp or rough areas on exposed surfaces.

D. Form bent-metal corners to smallest radius possible without causing grain separation or otherwise impairing work.

E. Form exposed work with accurate angles and surfaces and straight edges.

F. Weld connections to comply with the following:

1. Use materials and methods that minimize distortion and develop strength and corrosion resistance of base metals.
2. Obtain fusion without undercut or overlap.
3. Remove welding flux immediately.
4. Weld exposed corners and seams continuously unless otherwise indicated.
5. At exposed connections, finish exposed welds to comply with NOMMA's "Voluntary Joint Finish Standards" for **Finish #1 - No evidence of welded joint**.

G. Form exposed connections with hairline joints, flush and smooth, using concealed fasteners where possible.

1. Where exposed fasteners are required, use Phillips flat-head (countersunk) screws or bolts unless otherwise indicated.
2. Locate joints where least conspicuous.
3. Fabricate joints that will be exposed to weather in a manner to exclude water.
4. Provide weep holes where water may accumulate internally.

2.6 FABRICATION OF STEEL-FRAMED STAIRS

A. NAAMM Stair Standard: Comply with NAAMM AMP 510, "Metal Stairs Manual," for **Architectural** Class, unless more stringent requirements are indicated.

B. Stair Framing:

1. Fabricate stringers **steel rectangular tubes**.

a. Stringer Size: **As required to comply with "Performance Requirements" Article**.
b. Provide closures for exposed ends of channel and rectangular tube stringers.
c. Finish: **Shop primed**.

2. Construct platforms of steel **rectangular tube** headers and miscellaneous framing members as **required to comply with "Performance Requirements" Article**.

a. Provide closures for exposed ends of channel and rectangular tube framing.
b. Finish: **Shop primed**.

3. Weld **or bolt** stringers to headers; weld **or bolt** framing members to stringers and headers. **If using bolts, fabricate and join so bolts are not exposed on finished surfaces.**
4. Where stairs are enclosed by gypsum board assemblies, provide hanger rods or struts to support landings from floor construction above or below.

a. Locate hanger rods and struts where they do not encroach on required stair width and are within the fire-resistance-rated stair enclosure.

5. Where masonry walls support metal stairs, provide temporary supporting struts designed for erecting steel stair components before installing masonry.

C. Metal Pan Stairs: Form risers, subtread pans, and subplatforms to configurations shown from steel sheet of thickness needed to comply with performance requirements, but not less than 0.067 inch (1.7 mm).
1. Steel Sheet: Uncoated, **cold**] -rolled steel sheet **unless otherwise indicated**.
2. Directly weld metal pans to stringers; locate welds on top of subtreads where they will be concealed by concrete fill. Do not weld risers to stringers.
3. Attach risers and subtreads to stringers with brackets made of steel angles or bars. Weld brackets to stringers and attach metal pans to brackets by welding, riveting, or bolting.
4. Shape metal pans to include nosing integral with riser.
5. Provide subplatforms of configuration indicated or, if not indicated, the same as subtreads. Weld subplatforms to platform framing.

a. Smooth Soffit Construction: Construct subplatforms with flat metal under surfaces to produce smooth soffits.

2.7 FABRICATION OF STAIR RAILINGS AND GUARDS

A. Comply with applicable requirements in **Section 055213 "Pipe and Tube Railings."**

B. Fabricate railings and guards to comply with requirements indicated for design, dimensions, details, finish, and member sizes, including wall thickness of member, post spacings, wall bracket spacing, and anchorage, but not less than that needed to withstand indicated loads.

1. Rails and Posts: **1-1/2-inch- (38-mm-) square** top and bottom rails and 1-1/2-inch- (38-mm-) square posts.
2. Picket Infill: pickets spaced to prohibit the passage of a 4-inch (100-mm) diameter sphere.
3. Intermediate Rails Infill: **1-1/2-inch- (38-mm-) square** intermediate rails spaced less than **12 inches (305 mm)** clear.

C. Welded Connections: Fabricate railings and guards with welded connections.

1. Cope components at connections to provide close fit, or use fittings designed for this purpose.
2. Weld all around at connections, including at fittings.
3. Use materials and methods that minimize distortion and develop strength and corrosion resistance of base metals.
4. Obtain fusion without undercut or overlap.
5. Remove flux immediately.
6. Finish welds to comply with NOMMA's "Voluntary Joint Finish Standards" for **Finish #1 - No evidence of a welded joint**as shown in NAAMM AMP 521.

D. Form changes in direction of railings and guards as follows:

1. By bending **or by inserting prefabricated elbow fittings**.

E. For changes in direction made by bending, use jigs to produce uniform curvature for each repetitive configuration required. Maintain cross section of member throughout entire bend without buckling, twisting, cracking, or otherwise deforming exposed surfaces of components.

F. Close exposed ends of railing and guard members with prefabricated end fittings.

G. Provide wall returns at ends of wall-mounted handrails unless otherwise indicated.

1. Close ends of returns unless clearance between end of rail and wall is 1/4 inch (6 mm) or less.

H. Connect posts to stair framing by direct welding unless otherwise indicated.

I. Brackets, Flanges, Fittings, and Anchors: Provide wall brackets, end closures, flanges, miscellaneous fittings, and anchors for interconnecting components and for attaching to other work.

1. Furnish inserts and other anchorage devices for connecting to concrete or masonry work.
2. Provide ferrous-metal fittings, brackets, fasteners, and sleeves, except galvanize anchors embedded in exterior masonry and concrete construction.
3. Provide type of bracket **with predrilled hole for exposed bolt anchorage** and that provides 1-1/2-inch (38-mm) clearance from inside face of handrail to finished wall surface.

J. Fillers: Provide fillers made from steel plate, or other suitably crush-resistant material, where needed to transfer wall bracket loads through wall finishes to structural supports.

1. Size fillers to suit wall finish thicknesses and to produce adequate bearing area to prevent bracket rotation and overstressing of substrate.

2.8 FINISHES

A. Finish metal stairs after assembly.

B. Preparation for Shop Priming: Prepare uncoated, ferrous-metal surfaces to comply with SSPC-SP 3, "Power Tool Cleaning."

C. Apply shop primer to uncoated surfaces of metal stair components, except those with galvanized finishes and those to be embedded in concrete or masonry unless otherwise indicated. Comply with SSPC-PA 1, "Paint Application Specification No. 1: Shop, Field, and Maintenance Painting of Steel," for shop painting.

PART 3 - EXECUTION

3.1 INSTALLATION OF METAL PAN STAIRS

A. Fastening to In-Place Construction: Provide anchorage devices and fasteners where necessary for securing metal stairs to in-place construction.

1. Include threaded fasteners for concrete and masonry inserts, through-bolts, lag bolts, and other connectors.

B. Cutting, Fitting, and Placement: Perform cutting, drilling, and fitting required for installing metal stairs. Set units accurately in location, alignment, and elevation, measured from established lines and levels and free of rack.

C. Install metal stairs by welding stair framing to steel structure or to weld plates cast into concrete unless otherwise indicated.
   a. Set plates for structural members on wedges, shims, or setting nuts.
   b. Tighten anchor bolts after supported members have been positioned and plumbed.
   c. Do not remove wedges or shims but, if protruding, cut off flush with edge of plate before packing with grout.
   d. Promptly pack grout solidly between bearing surfaces and plates so no voids remain.

      1) Neatly finish exposed surfaces; protect grout and allow to cure.
      2) Comply with manufacturer's written installation instructions for shrinkage-resistant grouts.

D. Provide temporary bracing or anchors in formwork for items that are to be built into concrete, masonry, or similar construction.

E. Fit exposed connections accurately together to form hairline joints.

1. Weld connections that are not to be left as exposed joints but cannot be shop welded because of shipping size limitations.
2. Do not weld, cut, or abrade surfaces of exterior units that have been hot-dip galvanized after fabrication and are for bolted or screwed field connections.
3. Comply with requirements for welding in "Fabrication, General" Article.

F. Place and finish concrete fill for treads and platforms to comply with Section 033000 "Cast-in-Place Concrete."

3.2 INSTALLATION OF RAILINGS AND GUARDS

A. Adjust railing and guard systems before anchoring to ensure matching alignment at abutting joints with tight, hairline joints.

1. Space posts at spacing indicated or, if not indicated, as required by design loads.
2. Plumb posts in each direction, within a tolerance of 1/16 inch in 3 feet (2 mm in 1 m).

3. Align rails and guards so variations from level for horizontal members and variations from parallel with rake of stairs for sloping members do not exceed 1/4 inch in 12 feet (6 mm in 3.5 m).
4. Secure posts, rail ends, and guard ends to building construction as follows:

    a. Anchor posts to steel by **welding** to steel supporting members.
    b. Anchor handrail and guards ends to concrete and masonry with steel round flanges welded to rail and guard ends and anchored with post-installed anchors and bolts.

B. Attach handrails to wall with wall brackets.

1. Locate brackets as indicated or, if not indicated, at spacing required to support structural loads.
2. Secure wall brackets to building construction as required to comply with performance requirements.

3.3 REPAIR

A. Touchup Painting: Immediately after erection, clean field welds, bolted connections, and abraded areas of shop paint, and paint exposed areas with same material as used for shop painting to comply with SSPC-PA 1 for touching up shop-painted surfaces.

1. Apply by brush or spray to provide a minimum 2.0-mil (0.05-mm) dry film thickness.

B. Touchup Painting: Cleaning and touchup painting of field welds, bolted connections, and abraded areas of shop paint are specified in **Section 099123 "Interior Painting."**.

END OF SECTION 055113

THIS PAGE LEFT INTENTIONALLY BLANK

SECTION 055213 - PIPE AND TUBE RAILINGS

PART 1 - GENERAL

1.1 SUMMARY

A. Section Includes:

1. Steel railings.

1.2 ACTION SUBMITTALS

A. Product Data:

1. Manufacturer's product lines of mechanically connected railings.
2. Handrail brackets.
3. Shop primer.
4. Non-shrink, non-metallic grout.
5. Anchoring cement.
6. Metal finishes.
7. Paint products.

B. Shop Drawings: Include plans, elevations, sections, details, and attachments to other work.

C. Samples: For each type of exposed finish.

1.3 INFORMATIONAL SUBMITTALS

A. Welding certificates. All welders shall be certified.

B. Product Test Reports: For tests on railings performed by a qualified testing agency, in accordance with ASTM E894 and ASTM E935.

1.4 QUALITY ASSURANCE

A. Welding Qualifications: Qualify procedures and personnel in accordance with the following:

1. AWS D1.1/D1.1M, "Structural Welding Code - Steel."

PART 2 - PRODUCTS

2.1 PERFORMANCE REQUIREMENTS

A. Delegated Design: Engage a qualified professional engineer, as defined in Section 014000 "Quality Requirements," to design railings, including attachment to building construction.

B. Structural Performance: Railings, including attachment to building construction, shall withstand the effects of gravity loads and the following loads and stresses within limits and under conditions indicated:

1. Handrails and Top Rails of Guards:

   a. Uniform load of 50 lbf/ ft. (0.73 kN/m) applied in any direction.
   b. Concentrated load of 200 lbf (0.89 kN) applied in any direction.
   c. Uniform and concentrated loads need not be assumed to act concurrently.

2. Infill of Guards:

   a. Concentrated load of 50 lbf (0.22 kN) applied horizontally on an area of 1 sq. ft. (0.093 sq. m).
   b. Infill load and other loads need not be assumed to act concurrently.

2.2 METALS, GENERAL

A. Metal Surfaces, General: Provide materials with smooth surfaces, without seam marks, roller marks, rolled trade names, stains, discolorations, or blemishes.

B. Brackets, Flanges, and Anchors: Cast or formed metal of same type of material and finish as supported rails unless otherwise indicated.

1. Provide type of bracket with **flange tapped for concealed anchorage to threaded hanger bolt** and that provides 1-1/2-inch (38-mm) clearance from inside face of handrail to finished wall surface.

2.3 STEEL RAILINGS

A. Pipe: ASTM A53/A53M, Type F or Type S, Grade A, Standard Weight (Schedule 40), unless another grade and weight are required by structural loads.

B. Plates, Shapes, and Bars: ASTM A36/A36M.

C. Cast Iron Fittings: Either gray iron, ASTM A48/A48M, or malleable iron, ASTM A47/A47M, unless otherwise indicated.

2.4 FASTENERS

A. Fastener Materials:

1. Ungalvanized-Steel Railing Components: Plated steel fasteners complying with ASTM F1941 (ASTM F1941M), Class Fe/Zn 5 for zinc coating.

B. Post-Installed Anchors: Fastener systems with working capacity greater than or equal to the design load, according to an evaluation report acceptable to authorities having jurisdiction, based on ICC-ES AC193[**or ICC-ES AC308**].

1. Material for Interior Locations: Carbon-steel components zinc-plated to comply with ASTM B633 or ASTM F1941/F1941M, Class Fe/Zn 5, unless otherwise indicated.

2.5 MISCELLANEOUS MATERIALS

A. Handrail Brackets: **Cast iron 2-1/2 inches (63.5 mm) face of railing/wall**.

B. Welding Rods and Bare Electrodes: Select in accordance with AWS specifications for metal alloy welded.

C. Universal Shop Primer: Fast-curing, lead- and chromate-free, universal modified-alkyd primer complying with MPI#79 and compatible with topcoat.

1. Use primer containing pigments that make it easily distinguishable from zinc-rich primer.

D. Epoxy Intermediate Coat: Complying with MPI #77 and compatible with primer and topcoat.

E. Polyurethane Topcoat: Complying with MPI #72 and compatible with undercoat.

F. Bituminous Paint: Cold-applied asphalt emulsion, complying with ASTM D1187/D1187M.

G. Non-shrink, Non-metallic Grout: Factory-packaged, nonstaining, noncorrosive, nongaseous grout, complying with ASTM C1107/C1107M. Provide grout specifically recommended by manufacturer for interior and exterior applications.

H. Anchoring Cement: Factory-packaged, non-shrink, non-staining, hydraulic-controlled expansion cement formulation for mixing with water at Project site to create pourable anchoring, patching, and grouting compound.

2.6 FABRICATION

A. Cut, drill, and punch metals cleanly and accurately.

1. Remove burrs and ease edges to a radius of approximately 1/32 inch (1 mm) unless otherwise indicated.
2. Remove sharp or rough areas on exposed surfaces.

B. Form work true to line and level with accurate angles and surfaces.

C. Welded Connections: Cope components at connections to provide close fit, or use fittings designed for this purpose. Weld all around at connections, including at fittings.

1. Use materials and methods that minimize distortion and develop strength and corrosion resistance of base metals.
2. Obtain fusion without undercut or overlap.
3. Remove flux immediately.
4. At exposed connections, finish exposed welds to comply with NOMMA's "Voluntary Joint Finish Standards" for **Finish #2 welds; good appearance, completely sanded joint.**

D. Form changes in direction as follows:
1. **By bending or by inserting prefabricated elbow fittings** .

E. Bend members in jigs to produce uniform curvature for each configuration required. Maintain cross section of member throughout entire bend without buckling, twisting, cracking, or otherwise deforming exposed surfaces of components.

F. Close exposed ends of hollow railing members with prefabricated cap and end fittings of same metal and finish as railings.

G. Provide wall returns at ends of wall-mounted handrails unless otherwise indicated. Close ends of returns unless clearance between end of rail and wall is 1/4 inch (6 mm) or less.

H. Brackets, Flanges, Fittings, and Anchors: Provide wall brackets, flanges, miscellaneous fittings, and anchors to interconnect railing members to other work unless otherwise indicated.

1. At brackets and fittings fastened to plaster or gypsum board partitions, provide crush-resistant fillers or other means to transfer loads through wall finishes to structural supports and prevent bracket or fitting rotation and crushing of substrate.

I. Provide inserts and other anchorage devices for connecting railings to concrete or masonry work.

1. Fabricate anchorage devices capable of withstanding loads imposed by railings.
2. Coordinate anchorage devices with supporting structure.

J. For railing posts set in concrete, provide stainless steel sleeves not less than 6 inches (150 mm) long with inside dimensions not less than 1/2 inch (13 mm) greater than outside dimensions of post, with metal plate forming bottom closure.

2.7 STEEL AND IRON FINISHES

A. For non-galvanized-steel railings, provide nongalvanized ferrous-metal fittings, brackets, fasteners, and sleeves; however, hot-dip galvanize anchors to be embedded in exterior concrete or masonry.

B. Preparation for Shop Priming: Prepare uncoated ferrous-metal surfaces to comply with **SSPC-SP 6/NACE No. 3.**

C. Primer Application: Apply shop primer to prepared surfaces of railings unless otherwise indicated. Comply with requirements in SSPC-PA 1 for shop painting. Primer need not be applied to surfaces to be embedded in concrete or masonry.

1. Shop prime uncoated railings with **universal shop primer**.

PART 3 - EXECUTION

3.1 INSTALLATION, GENERAL

A. Perform cutting, drilling, and fitting required for installing railings.

1. Fit exposed connections together to form tight, hairline joints.
2. Install railings level, plumb, square, true to line; without distortion, warp, or rack.
3. Set railings accurately in location, alignment, and elevation; measured from established lines and levels.
4. Do not weld, cut, or abrade surfaces of railing components that are coated or finished after fabrication and that are intended for field connection by mechanical or other means without further cutting or fitting.
5. Set posts plumb within a tolerance of 1/16 inch in 3 feet (2 mm in 1 m).
6. Align rails so variations from level for horizontal members and variations from parallel with rake of steps and ramps for sloping members do not exceed 1/4 inch in 12 feet (6 mm in 3.5 m).

B. Control of Corrosion: Prevent galvanic action and other forms of corrosion by insulating metals and other materials from direct contact with incompatible materials.

1. Coat concealed surfaces of aluminum that will be in contact with grout, concrete, masonry, wood, or dissimilar metals, with a heavy coat of bituminous paint.

3.2 ANCHORING POSTS

A. Use stainless steel pipe sleeves preset and anchored into concrete for installing posts. After posts are inserted into sleeves, fill annular space between post and sleeve with [**nonshrink, nonmetallic grout**] [**or**] [**anchoring cement**], mixed and placed to comply with anchoring material manufacturer's written instructions.

B. Form or core-drill holes not less than 5 inches (125 mm) deep and 3/4 inch (20 mm) larger than OD of post for installing posts in concrete. Clean holes of loose material, insert posts, and fill annular space between post and concrete with **nonshrink, nonmetallic grout or anchoring cement** , mixed and placed to comply with anchoring material manufacturer's written instructions.

3.3 ATTACHING RAILINGS

A. Attach handrails to walls with wall brackets. Provide brackets with **1-1/2-inch (38-mm)**] clearance from inside face of handrail and finished wall surface.

B. Secure wall brackets **and railing end flanges** to building construction as follows:

1. For concrete and solid masonry anchorage, use drilled-in expansion shields and hanger or lag bolts.
2. For hollow masonry anchorage, use toggle bolts.

C. Touchup Painting:

1. Immediately after erection, clean field welds, bolted connections, and abraded areas of shop paint, and paint exposed areas with the same material used for shop painting to comply with SSPC-PA 1 for touching up shop-painted surfaces.

END OF SECTION 055213

SECTION 06 10 00: ROUGH CARPENTRY

PART 1 - GENERAL

1.1 RELATED DOCUMENTS

A. Drawings and general provisions of Contract, including General and Supplementary Conditions apply to this Section.

1.2 SUMMARY

A. This Section includes the following:

1. Pressure treated wood grounds, nailers, and blocking (including plywood).

B. Related Sections: The following Sections contain requirements that relate to this Section:

1. Division 6 Section "Interior Architectural Woodwork" for nonstructural carpentry items exposed to view and not specified in another Section.

1.3 DEFINITIONS

A. Rough carpentry includes carpentry work not specified as part of other Sections and generally not exposed, unless otherwise specified. All concealed wood blocking and plywood shall be pressure treated wood.

1.4 SUBMITTALS

A. General: Submit the following in accordance with Conditions of Contract. Each Manufacturer providing products for this project is required to furnish the Florida Product Approval Number with every component included in the submittal documents. More information is available at the following link: http://www.pbcgov.com/pzb/building/productappr/rule_9B_72.pdf

B. Product data for the following products:

1. Insulating sheathing.
2. Metal framing anchors.
3. Construction adhesives.

C. Material certificates for dimensional lumber specified to comply with minimum allowable unit stresses. Indicate species and grade selected for each use as well as design values approved by the Board of Review of American Lumber Standards Committee.

D. Wood treatment data as follows including chemical treatment manufacturer's instructions for handling, storing, installation, and finishing of treated material:

1. For each type of preservative treated wood product include certification by treating plant stating type of preservative solution and pressure process used, net amount of preservative retained, and compliance with applicable standards.
2. For water-borne treated products include statement that moisture content of treated materials was reduced to levels indicated prior to shipment to project site.

3. Warranty of chemical treatment manufacturer for each type of treatment.

1.5 QUALITY ASSURANCE

B. Forest Certification: For the following wood products, provide materials produced from wood obtained from forests certified by an FSC-accredited certification body to comply with FSC 1.2, “Principles and Criteria”.

1. All wood products that are to be a part of the finish project.

1.6 DELIVERY, STORAGE, AND HANDLING

A. Delivery and Storage: Keep materials under cover and dry. Protect against exposure to weather and contact with damp or wet surfaces. Stack lumber as well as plywood and other panels; provide for air circulation within and around stacks and under temporary coverings including polyethylene and similar materials.

1. For lumber and plywood pressure treated with waterborne chemicals, place spacers between each bundle to provide air circulation.

PART 2 - PRODUCTS

2.1 LUMBER, GENERAL

A. Lumber Standards: Furnish lumber manufactured to comply with PS 20 "American Softwood Lumber Standard" and with applicable grading rules of inspection agencies certified by American Lumber Standards Committee's (ALSC) Board of Review.

B. Inspection Agencies: Inspection agencies and the abbreviations used to reference them with lumber grades and species include the following:

1. SPIB - Southern Pine Inspection Bureau.
2. WWPA - Western Wood Products Association.

C. Grade Stamps: Provide lumber with each piece factory-marked with grade stamp of inspection agency evidencing compliance with grading rule requirements and identifying grading agency, grade, species, moisture content at time of surfacing, and mill.

D. Nominal sizes are indicated, except as shown by detail dimensions. Provide actual sizes as required by PS 20, for moisture content specified for each use.

1. Provide dressed lumber, S4S, unless otherwise indicated.
2. Provide seasoned lumber with 19 percent maximum moisture content at time of dressing and shipment for sizes 2 inches or less in nominal thickness, unless otherwise indicated.

2.2 MISCELLANEOUS LUMBER

A. General: Provide lumber for support or attachment of other construction including rooftop equipment curbs and support bases, cant strips, bucks, nailers, blocking, furring, grounds, stripping, and similar members.

B. Fabricate miscellaneous lumber from dimension lumber of sizes indicated and into shapes shown.

C. Moisture content: 19 percent maximum for lumber items not specified to receive wood preservative treatment.

D. Grade: "Standard" grade light-framing-size lumber of any species or board-size lumber as required. "No. 3 Common" or "Standard" grade boards per WCLIB or WWPA rules or "No. 2 Boards" per SPIB rules.

2.3 CONSTRUCTION PANELS FOR BACKING

A. Plywood Backing Panels: For mounting electrical or telephone equipment, provide fire-retardant-treated plywood panels with grade designation, APA C-D PLUGGED EXPOSURE 1, in thickness indicated, or, if not otherwise indicated, not less than 15/32 inch.

2.4 FASTENERS

A. General: Provide fasteners of size and type indicated that comply with requirements specified in this article for material and manufacture.

1. Where rough carpentry is exposed to weather, in ground contact, or in area of high relative humidity, provide fasteners with a hot-dip zinc coating per ASTM A 153 or of AISI Type 304 stainless steel.

B. Nails, Wire, Brads, and Staples: FS FF-N-105.

C. Power Driven Fasteners: National Evaluation Report NER-272.

D. Wood Screws: ANSI B18.6.1.

E. Lag Bolts: ANSI B18.2.1.

F. Bolts: Steel bolts complying with ASTM A 307, Grade A; with ASTM A 563 hex nuts and where indicated, flat washers.

2.5 METAL FRAMING ANCHORS

A. General: Provide metal framing anchors of type, size, metal, and finish indicated that comply with requirements specified including the following:

1. Current Evaluation/Research Reports: Provide products for which model code evaluation/research reports exist that are acceptable to authorities having jurisdiction and that evidence compliance of metal framing anchors for application indicated with the building code in effect for this Project.
2. Allowable Design Loads: Provide products for which manufacturer publishes allowable design loads that are determined from empirical data or by rational engineering analysis and that are demonstrated by comprehensive testing performed by a qualified independent testing laboratory.

B. Galvanized Steel Sheet: Steel sheet zinc-coated by hot-dip process on continuous lines prior to fabrication to comply with ASTM A 525 for Coating Designation G60 and with ASTM A 446, Grade A (structural quality); ASTM A 526 (commercial quality); or ASTM A 527 (lock-forming quality); as standard with manufacturer for type of anchor indicated.

1. Use galvanized steel framing anchors for rough carpentry exposed to weather, in ground contact, or in area of high relative humidity, and where indicated.

C. Painted Steel Sheet: ASTM A 366 (commercial quality) cold rolled steel sheet or ASTM A 570, Grade 33 (structural quality) hot-rolled steel sheet, as standard with manufacturer for type of anchor indicated, coated after fabrication with manufacturers standard, fast-curing, lead-free "universal primer" resistant to normal atmospheric corrosion.

1. Use painted steel framing anchors for rough carpentry not exposed to weather, in ground contact, or in area of high relative humidity.

2.6 MISCELLANEOUS MATERIALS

A. Sill Sealer Gaskets: Glass fiber resilient insulation fabricated in strip form for use as a sill sealer; 1 inch nominal thickness compressible to 1/32 inch; selected from manufacturer's standard widths to suit width of sill members indicated; in rolls of 50 feet or 100 feet in length.

B. Water Repellent Preservative: NWWDA-tested and -accepted formulation containing 3-iodo-2-propynyl butyl carbonate (IPBC) as its active ingredient.

C. Adhesives for Field Gluing Panels to Framing: Formulation complying with APA AFG-01, ASTM D 3498 that is approved for use with type of construction panel indicated by both adhesive and panel manufacturers.

1. VOC Content: Not more than 70 g/L when calculated according to 40 CFR 59, Subpart D (EPA Method 24).

2.7 PRESERVATIVE WOOD TREATMENT BY PRESSURE PROCESS

A. General: Where lumber or plywood is indicated as preservative-treated wood or is specified herein to be treated, comply with applicable requirements of AWPA Standards C2 (Lumber) and C9 (Plywood). Mark each treated item with the AWPB or SPIB Quality Mark Requirements.

B. Pressure-treat above-ground items with water-borne preservatives to a minimum retention of 0.25 pcf. For interior uses, after treatment, kiln-dry lumber and plywood to a maximum moisture content, respectively, of 19 percent and 15 percent. Treat indicated items and the following:

1. Wood cants, nailers, curbs, equipment support bases, blocking, stripping, and similar members in connection with roofing, flashing, vapor barriers, and waterproofing.
2. Wood sills, sleepers, blocking, furring, stripping, and similar concealed members in contact with masonry or concrete.
3. Wood framing members less than 18 inches above grade.
4. Wood floor plates installed over concrete slabs directly in contact with earth.

C. Pressure-treat wood members in contact with the ground or fresh water with water-borne preservatives to a minimum retention of 0.40 pcf.

D. Complete fabrication of treated items prior to treatment, where possible. If cut after treatment, coat cut surfaces to comply with AWPA M4. Inspect each piece of lumber or plywood after drying and discard damaged or defective pieces.

PART 3 - EXECUTION

3.1 INSTALLATION, GENERAL

A. Discard units of material with defects that impair quality of rough carpentry construction and that are too small to use in fabricating rough carpentry with minimum joints or optimum joint arrangement.

B. Set rough carpentry to required levels and lines, with members plumb and true to line and cut and fitted.

C. Fit rough carpentry to other construction; scribe and cope as required for accurate fit. Correlate location of furring, nailers, blocking, grounds, and similar supports to allow attachment of other construction.

D. Securely attach rough carpentry work to substrate by anchoring and fastening as required.

E. Countersink nail heads on exposed carpentry work and fill holes.

F. Use common wire nails, unless otherwise indicated. Use finishing nails for finish work. Select fasteners of size that will not penetrate members where opposite side will be exposed to view or will receive finish materials. Make tight connections between members. Install fasteners without splitting of wood; predrill as required.

3.2 WOOD GROUNDS, NAILERS, BLOCKING, AND SLEEPERS

A. Install wood grounds, nailers, blocking, and sleepers where shown and where required for screeding or attachment of other work. Form to shapes as shown and cut as required for true line and level of work to be attached. Coordinate location with other work involved.

B. Attach to substrates as required to support applied loading. Countersink bolts and nuts flush with surfaces, unless otherwise indicated. Build into masonry during installation of masonry work. Where possible, anchor to formwork before concrete placement.

END OF SECTION 06100

THIS PAGE LEFT INTENTIONALLY BLANK

SECTION 06 40 23 - INTERIOR ARCHITECTURAL WOODWORK

PART 1 - GENERAL

1.1 SUMMARY

A. This Section includes the following:
   1. Plastic-laminate cabinets.
B. Interior architectural woodwork includes wood furring, blocking, shims, and hanging strips unless concealed within other construction before woodwork installation.

1.2 SUBMITTALS

A. Product Data: For cabinet hardware and accessories.
B. Shop Drawings: Show location of each item, dimensioned plans and elevations, large-scale details, attachment devices, and other components.
C. Samples:
   1. Lumber and panel products with shop-applied opaque finish, for each finish system and color, with exposed surface finished.
   2. Plastic-laminates, for each type, color, pattern, and surface finish.

1.3 QUALITY ASSURANCE

A. Quality Standard: Unless otherwise indicated, comply with AWI's "Architectural Woodwork Quality Standards".

1.4 PROJECT CONDITIONS

A. Environmental Limitations: Do not deliver or install woodwork until building is enclosed, wet work is complete, and HVAC system is operating and maintaining temperature and relative humidity at occupancy levels during the remainder of the construction period.
B. Field Measurements: Where woodwork is indicated to fit to other construction, verify dimensions of other construction by field measurements before fabrication, and indicate measurements on Shop Drawings. Coordinate fabrication schedule with construction progress to avoid delaying the Work.
   1. Locate concealed framing, blocking, and reinforcements that support woodwork by field measurements before being enclosed, and indicate measurements on Shop Drawings.

PART 2 - PRODUCTS

2.1 MATERIALS

A. Wood Products:
   1. Hardboard: AHA A135.4.
   2. Medium-Density Fiberboard: ANSI A208.2, Grade MD, made with binder containing no urea formaldehyde.
   3. Particleboard: ANSI A208.1, Grade M-2-Exterior Glue.
   4. Softwood Plywood: DOC PS 1, Medium Density Overlay.
   5. Veneer-Faced Panel Products (Hardwood Plywood): HPVA HP-1, made with adhesive containing no urea formaldehyde.

B. Melamine: Particleboard or medium-density fiberboard finished with thermally fused, melamine-impregnated decorative paper complying with LMA SAT-1.
C. High-Pressure Decorative Laminate: NEMA LD 3, grades as indicated or, if not indicated, as required by woodwork quality standard.

2.2 CABINET HARDWARE AND ACCESSORIES

A. General: Provide cabinet hardware and accessory materials associated with architectural woodwork, except for items specified in Division 08 Section "Door Hardware".
B. Frameless Concealed Hinges (European Type): BHMA A156.9, B01602, self-closing.
C. Wire Pulls: Back mounted, solid metal 4 inches (100 mm) long, 5/16 inch (8 mm) in diameter.
D. Adjustable Shelf Standards and Supports: BHMA A 156.9, B04071; with shelf rest, B04081 and BHMA A 156.9, B04102; with shelf brackets. B04112.
E. Drawer Slides: BHMA A156.9, B05091.
   1. Standard Duty (Grade 1, Grade 2, and Grade 3): Side mounted and extending under bottom edge of drawer; full-extension type; zinc-plated steel or epoxy-coated steel with polymer rollers.
   2. Heavy Duty (Grade 1HD-100 and Grade 1HD-200): Side mounted; full-overtravel-extension type; zinc-plated steel ball-bearing slides.
   3. Box Drawer Slides: Grade 1; for drawers not more than 6 inches (150 mm) high and 24 inches (600 mm) wide
   4. File Drawer Slides: Grade 1HD-100; for drawers more than 6 inches (150 mm) high or 24 inches (600 mm) wide.
   5. Pencil Drawer Slides: Grade 2; for drawers not more than 3 inches (75 mm) high and 24 inches (600 mm) wide.
   6. Keyboard Slides: Grade 1; for computer keyboard shelves.
F. Door Locks: BHMA A156.11, E07121. Provide locks at all doors and drawers unless noted otherwise.
G. Drawer Locks: BHMA A156.11, E07041. Provide locks at all drawers unless noted otherwise.
H. Grommets for Cable Passage through Countertops: 2-inch (51-mm) OD, molded-plastic grommets and matching plastic caps with slot for wire passage.
   1. Product: Subject to compliance with requirements, provide “SG series” by Doug Mockett & Company, Inc.
I. Exposed Hardware Finishes: For exposed hardware, provide finish that complies with BHMA A156.18 for BHMA finish number indicated.
   1. Satin Stainless Steel: BHMA 630.
J. For concealed hardware, provide manufacturer’s standard finish that complies with product class requirements in BHMA 156.9.

2.3 MISCELLANEOUS MATERIALS

A. Furring, Blocking, Shims, and Hanging Strips: Softwood or hardwood lumber, fire-retardant-treated, kiln-dried to less than 15 percent moisture content.
B. Adhesives, General: Do not use adhesives that contain urea formaldehyde.

2.4 FABRICATION

A. General: Complete fabrication to maximum extent possible before shipment to Project site. Where necessary for fitting at site, provide allowance for scribing, trimming, and fitting.
   1. Fabricate to AWI Premium quality standards.

2. Shop cut openings to maximum extent possible. Sand edges of cutouts to remove splinters and burrs. Seal edges of openings in countertops with a coat of varnish.

B. Shelving: Plastic laminate **1 INCH** (19-mm) particle board shelving with PVC front edge. Plastic laminate and paint color of brackets to be selected by Architect.

C. Plastic-Laminate Cabinets:
1. Provide two colors of laminate. WILSONART. Basis of Design.
2. Quality Standard: Comply with AWI Section 400 requirements for Laminate cabinets.
3. Grade: Custom.
4. AWI Type of Cabinet Construction: Flush overlay.
5. Grain or Pattern Direction: Vertically for drawer fronts, doors, and fixed panels.
6. Laminate Cladding for Exposed Surfaces: High-pressure decorative laminate over ¾-inch particleboard as follows:
   a. Horizontal Surfaces Other Than Tops: Grade HGS.
   b. Postformed Surfaces: Grade HGP.
   c. Vertical Surfaces: Grade HGS.
   d. Edges: Lumber edge for transparent finish matching wood species and cut on cabinet surfaces PVC edge banding, 0.12 inch (3-mm) thick, matching laminate in color, pattern and finish.
      1) All edge banding must be fee of delamination, bubbles, and all adhesive residues.
      2) All edges must be banded.
7. Materials for Semiexposed Surfaces Other Than Drawer Bodies: Melamine, over 3/4-inch particleboard. High-pressure decorative laminate, Grade HGS.
   a. To include, but not limited to the following:
      1) Interior shelving.
   b. Melamine Color:
      1) To be selected by Architect.
   c. Edges of Plastic-Laminate Shelves: PVC edge banding, 0.12 inch (3-mm) thick, matching laminate in color, pattern and finish.
      1) All edge banding must be free of delamination, bubbles, and all adhesive residue.
      2) All edges must be banded.
8. Drawer Sides and Backs: High pressure decorative laminate (melamine) on 7 ply veneer core substrate; all visible surfaces with drawer in normal open position, compatible with interior finish or solid hardwood lumber (minimum of 1/2-inch thick).
   a. Melamine Color:
      1) To be selected by Architect.
9. Drawer Bottoms: Melamine, over 1/4-inch veneer core panel product “B” face hardwood veneer or thermoset decorative overlay panel product.
   a. Melamine Color:
      1) To be selected by Architect.
10. Joinery for Case Body Members:
   a. Tops, Exposed Ends and Bottoms:
      1) Stop dado, glued under pressure and either nailed, or screwed (fasteners will not be visible on exposed parts).
      2) Doweled, glued under pressure (approximately 4 dowels per foot of joint).
      3) European assembly screws (37 mm from end, 128 mm on center, fasteners will not be visible on exposed parts).
   b. Exposed End Corner Details and Face Frame Attachment:
      1) Mitered joint: lock miter or spline or biscuit, glued under pressure (no visible fasteners).

2) Non-mitered joints, i.e. 90 degree applications: butt joint glued under pressure (no visible fasteners).

c. Cabinet Backs – Wall Hung: Wall hung cabinet backs must be relied upon to support the full weight of the cabinet and its anticipated load for hanging/mounting purposes. Hanging/mounting mechanisms should transfer load to case body members.
   1) Full bound, captured in grooves on cabinet sides, top and bottom.
   2) Full overlay, plant-on backs: Minimum 1/2-inch thick attached with minimum #12 plated (not case-hardened) screws spaced minimum 3-inches on center. Anchor strips not required for backs 1/2-inch and thicker so attached. Edge of back should not be exposed on finished ends.

d. Cabinet Backs – Floor Standing:
   1) Side bound, captured in grooves; glued and fastened to top and bottom.
   2) Full overlay, plant-on backs: minimum 1/2-inch thick attached with minimum #12 plated (not case-hardened) screws spaced minimum 3-inches on center. Anchor strips not required for back 1/2-inch and thicker so attached. Edge of back should not be exposed on finished ends.

e. Anchor Strips for cabinet backs less than 1/2-inch thick: Minimum 1/2-inch thick lumber or panel product, minimum 2-1/2-inches width; securely attached to the wall side of the cabinet back – top and bottom for wall hung cabinets, top only for floor standing cabinets.

11. Drawer Construction Techniques and Supports:
    a. Multiple Dovetail (all corners), French Dovetail front/dadoed back, glued under pressure.
    b. Doweled, glued under pressure (minimum 32 mm dowel spacing to 4-inch high, 64 mm dowel spacing above 4-inches.
    c. Lock Shoulder, glued and pin nailed.
    d. Bottoms shall be set into sides, back and front, 1/4-inch deep groove with minimum 3/8-inch standing shoulder.
12. Drawer Hardware Static Load: Combination metal and roller bearing drawer slides.
13. Adjustable Shelf Techniques and Support: Metal shelf standards (recessed flush) or Multiple holes (minimum 5-mm diameter with pins).
14. Colors, Patterns, and Finishes: As selected by Architect from laminate manufacturer's full range of solid colors, wood grains or pattern finishes.
15. Provide dust panels of 1/4-inch (6.4-mm) plywood or tempered hardboard above compartments and drawers, unless located directly under tops.

2.5 SHOP FINISHING

A. General: The entire finish of interior architectural woodwork is specified in this Section, regardless of whether shop applied or applied after installation. The extent to which the final finish is applied at fabrication shop is Contractor's option, except shop apply at least the prime coat before delivery. Refer to Division 9 Section "Painting" for final finishing of installed architectural woodwork and for stain, varnish and sealer.

B. Final touchup, filling countersunk fasteners, cleaning and polishing after installation.

PART 3 - EXECUTION

3.1 INSTALLATION

A. Before installation, condition woodwork to average prevailing humidity conditions in installation areas. Examine shop-fabricated work for completion and complete work as required, including removal of packing and backpriming.
B. Grade: Install woodwork to comply with requirements for the same grade specified in Part 2 for fabrication of type of woodwork involved.
C. Install woodwork level, plumb, true, and straight to a tolerance of 1/8 inch in 96 inches (3 mm in 2400 mm). Shim as required with concealed shims.
D. Scribe and cut woodwork to fit adjoining work, refinish cut surfaces, and repair damaged finish at cuts.
E. Anchor woodwork to anchors or blocking built in or directly attached to substrates. Secure with countersunk, concealed fasteners and blind nailing as required for complete installation. Use fine finishing nails or finishing screws for exposed fastening, countersunk and filled flush with woodwork and matching final finish if transparent finish is indicated.
F. Cabinets: Install without distortion so doors and drawers fit openings properly and are accurately aligned. Adjust hardware to center doors and drawers in openings and to provide unencumbered operation.
    1. Fasten wall cabinets through back, near top and bottom, at ends and not more than 16 inches (400 mm) o.c.
G. Countertops: Anchor securely by screwing through corner blocks of base cabinets or other supports into underside of countertop. Calk space between backsplash and wall with sealant specified in Division 07 Section "Joint Sealants."

END OF SECTION 06 40 23

This page left intentionally blank.

SECTION 064116 - PLASTIC-LAMINATE-CLAD ARCHITECTURAL CABINETS

PART 1 - GENERAL

1.1 SUMMARY

A. Section Includes:

1. Plastic-laminate-clad architectural cabinets.
2. Cabinet hardware and accessories.
3. Wood furring, blocking, shims, and hanging strips for installing plastic-laminate-clad architectural cabinets that are not concealed within other construction.

1.2 PREINSTALLATION MEETINGS

A. Preinstallation Conference: Conduct conference at **Project site**].

1.3 ACTION SUBMITTALS

A. Product Data: For each type of product.

B. Sustainable Design Submittals:

1. Submit design data demonstrating LEED Compliance for recycled content, regional materials, certified wood, adhesives, composite wood, low VOC content.

C. Shop Drawings:

1. Include plans, elevations, sections, and attachment details.
2. Apply **AWI Quality Certification** Program label to Shop Drawings.

D. Samples: For each exposed product and for each color and texture specified.

1.4 INFORMATIONAL SUBMITTALS

A. Research reports.

B. Field quality control reports.

1.5 QUALITY ASSURANCE

A. Manufacturer's Qualifications: Employs skilled workers who custom fabricate products similar to those required for this Project and whose products have a record of successful in-service performance.

1.6 FIELD CONDITIONS

A. Environmental Limitations without Humidity Control: Do not deliver or install cabinets until building is enclosed, wet-work is complete, and HVAC system is operating and maintaining temperature and relative humidity at levels planned for building occupants during the remainder of the construction period.

B. Environmental Limitations with Humidity Control: Do not deliver or install cabinets until building is enclosed, wet-work is complete, and HVAC system is operating and maintaining temperature between 60 and 90 deg F (16 and 32 deg C) and relative humidity between **25 and 55** percent during the remainder of the construction period.

PART 2 - PRODUCTS

2.1 PLASTIC-LAMINATE-CLAD ARCHITECTURAL CABINETS

A. Quality Standard: Unless otherwise indicated, comply with the Architectural Woodwork Standards for grades of cabinets indicated for construction, finishes, installation, and other requirements.

B. Architectural Woodwork Standards Grade: **Custom**.

C. Type of Construction: **Frameless**.

D. Door and Drawer-Front Style: **Flush** overlay.

E. High-Pressure Decorative Laminate: NEMA LD 3, grades as indicated or if not indicated, as required by quality standard.

F. Laminate Cladding for Exposed Surfaces:

1. Horizontal Surfaces: **Grade HGL**..
2. Vertical Surfaces: **Grade VGS**.
3. Edges: **Grade VGS**
4. Pattern Direction: **Vertically for doors and fixed panels, horizontally for drawer fronts**.

G. Drawer Construction: Fabricate with exposed fronts fastened to subfront with mounting screws from interior of body.

1. Join subfronts, backs, and sides with **glued rabbeted joints supplemented by mechanical fasteners**.

H. Colors, Patterns, and Finishes: Provide materials and products that result in colors and textures of exposed laminate surfaces complying with the following requirements:
1. Match Architect's sample. Refer to finish schedule on the drawings.

2.2 WOOD MATERIALS

A. Wood Products: Provide materials that comply with requirements of referenced quality standard for each type of architectural cabinet and quality grade specified unless otherwise indicated.

1. Wood Moisture Content: **5 to 10** percent.

B. Composite Wood Products: Provide materials that comply with requirements of referenced quality standard for each type of architectural cabinet and quality grade specified unless otherwise indicated. Comply with LEED requirements for recycled content and composite wood products.
1. Medium-Density Fiberboard (MDF): ANSI A208.2, **Grade 130**.
2. Particleboard (Medium Density): ANSI A208.1, **Grade M-2**.
3. Softwood Plywood: DOC PS 1 **, medium-density overlay**.
4. Thermally Fused Laminate (TFL) Panels: Particleboard or MDF finished with thermally fused, melamine-impregnated decorative paper and complying with requirements of NEMA LD 3, Grade VGL, for Test Methods 3.3, 3.4, 3.6, 3.8, and 3.10.

2.3 CABINET HARDWARE AND ACCESSORIES

A. General: Provide cabinet hardware and accessory materials associated with architectural cabinets**.**

2.4 MISCELLANEOUS MATERIALS

A. Furring, Blocking, Shims, and Hanging Strips: **Softwood or hardwood lumber**], kiln-dried to less than 15 percent moisture content.

B. Anchors: Select material, type, size, and finish required for each substrate for secure anchorage. Provide metal expansion sleeves or expansion bolts for post-installed anchors. Use nonferrous-metal or hot-dip galvanized anchors and inserts at inside face of exterior walls and at floors.

C. Use LEED Compliant adhesives, manufacturer's standard.

2.5 FABRICATION

A. Complete fabrication, including assembly and hardware application, to maximum extent possible before shipment to Project site. Disassemble components only as necessary for shipment and installation. Where necessary for fitting at site, provide ample allowance for scribing, trimming, and fitting.

B. Shop-cut openings to maximum extent possible to receive hardware, appliances, electrical work, and similar items. Locate openings accurately and use templates or roughing-in diagrams to produce accurately sized and shaped openings. Sand edges of cutouts to remove splinters and burrs.

PART 3 - EXECUTION

3.1 INSTALLATION

A. Before installation, condition cabinets to humidity conditions in installation areas for not less than 72 hours.

B. Architectural Woodwork Standards Grade: Install cabinets to comply with quality standard grade of item to be installed.

C. Anchor cabinets to anchors or blocking built in or directly attached to substrates. Secure with wafer-head cabinet installation screws.

D. Install cabinets level, plumb, and true in line to a tolerance of 1/8 inch in 96 inches (3 mm in 2400 mm) using concealed shims.

1. Scribe and cut cabinets to fit adjoining work, refinish cut surfaces, and repair damaged finish at cuts.
2. Install cabinets without distortion so doors and drawers fit openings and are accurately aligned. Adjust hardware to center doors and drawers in openings and to provide unencumbered operation. Complete installation of hardware and accessory items as indicated.
3. Fasten wall cabinets through back, near top and bottom, and at ends not more than 16 inches (400 mm) o.c. with **No. 10 wafer-head screws sized for not less than 1-1/2-inch (38-mm) penetration into wood framing, blocking, or hanging strips**,**No. 10 wafer-head sheet metal screws through metal backing or metal framing behind wall finish**, **toggle bolts through metal backing or metal framing behind wall finish**.

END OF SECTION 064116

SECTION 071326 - SELF-ADHERING SHEET WATERPROOFING

PART 1 - GENERAL

1.1 SUMMARY

A. Section Includes:

1. Modified bituminous sheet waterproofing.
2. Protection course.

1.2 PRE-INSTALLATION MEETINGS

A. Preinstallation Conference: Conduct conference at [**Project site**] <**Insert location**>.

1.3 ACTION SUBMITTALS

A. Product Data: For each type of product.

B. Shop Drawings: Show locations and extent of waterproofing and details of substrate joints and cracks, expansion joints, sheet flashings, penetrations, inside and outside corners, tie-ins with adjoining waterproofing, and other termination conditions.

1. Include setting drawings showing layout, sizes, sections, profiles, and joint details of pedestal-supported concrete pavers.

C. Samples: For each exposed product and for each color and texture specified.

1.4 INFORMATIONAL SUBMITTALS

A. Sample warranties.

1.5 QUALITY ASSURANCE

A. Installer Qualifications: An entity that employs installers and supervisors who are trained and approved by waterproofing manufacturer.

1.6 WARRANTY

A. Manufacturer's Warranty: Manufacturer agrees to furnish replacement waterproofing material for waterproofing that does not comply with requirements or that fails to remain watertight within specified warranty period.

1. Warranty Period: **Three** years from date of Substantial Completion.

PART 2 - PRODUCTS

2.1 MODIFIED BITUMINOUS SHEET WATERPROOFING

A. Modified Bituminous Sheet Waterproofing: Minimum 60-mil (1.5-mm) nominal thickness, self-adhering sheet consisting of 56 mils (1.4 mm) of rubberized asphalt laminated on one side to a 4-mil- (0.10-mm-) thick, polyethylene-film reinforcement, and with release liner on adhesive side**; formulated for application with primer or surface conditioner that complies with VOC limits of authorities having jurisdiction**.

B. Products acceptable for use on this project include but are not limited to the following.
1. CETCO
2. Tremco
3. W.R. Meadows
4. Physical Properties:

a. Tensile Strength, Membrane: 250 psi (1.7 MPa) minimum; ASTM D412, Die C, modified.
b. Ultimate Elongation: 300 percent minimum; ASTM D412, Die C, modified.
c. Low-Temperature Flexibility: Pass at minus 20 deg F (minus 29 deg C); ASTM D1970/D1970M.
d. Crack Cycling: Unaffected after 100 cycles of 1/8-inch (3-mm) movement; ASTM C836/C836M.
e. Puncture Resistance: 40 lbf (180 N) minimum; ASTM E154/E154M.
f. Water Absorption: 0.2 percent weight-gain maximum after 48-hour immersion at 70 deg F (21 deg C); ASTM D570.
g. Water Vapor Permeance: 0.05 perm (2.9 ng/Pa x s x sq. m) maximum; ASTM E96/E96M, Water Method.
h. Hydrostatic-Head Resistance: **200 feet (60 m)** minimum; ASTM D5385.

5. Sheet Strips: Self-adhering, rubberized-asphalt strips of same material and thickness as sheet waterproofing.

2.2 AUXILIARY MATERIALS

A. Furnish auxiliary materials recommended by waterproofing manufacturer for intended use and compatible with sheet waterproofing.

1. Furnish liquid-type auxiliary materials that comply with VOC limits of authorities having jurisdiction.

B. Primer: Liquid **waterborne** primer recommended for substrate by sheet-waterproofing material manufacturer.

C. Surface Conditioner: Liquid, waterborne surface conditioner recommended for substrate by sheet-waterproofing material manufacturer.

D. Liquid Membrane: Elastomeric, two-component liquid, cold fluid applied, of trowel grade or low viscosity.

E. Substrate Patching Membrane: Low-viscosity, two-component, modified asphalt coating.

F. Metal Termination Bars: Aluminum bars, approximately 1 by 1/8 inch (25 by 3 mm), pre-drilled at 9-inch (229-mm) centers.

G. Protection Course, Extruded-Polystyrene Board Insulation, Faced: Fan folded, faced on [**one side** with plastic film, nominal thickness 1/4 inch (6 mm), with compressive strength of not less than 8 psi (55 kPa) per ASTM D1621, and maximum water absorption by volume of 0.6 percent per ASTM C272/C272M.

PART 3 - EXECUTION

3.1 PREPARATION

A. Clean, prepare, and treat substrates according to manufacturer's written instructions. Provide clean, dust-free, and dry substrates for waterproofing application.

B. Mask off adjoining surfaces not receiving waterproofing to prevent spillage and overspray affecting other construction.

3.2 INSTALLATION OF MODIFIED BITUMINOUS SHEET-WATERPROOFING

A. Install modified bituminous sheets according to waterproofing manufacturer's written instructions.

B. Apply primer to substrates at required rate and allow it to dry. Limit priming to areas that will be covered by sheet waterproofing in same day. Reprime areas exposed for more than 24 hours.

C. Apply and firmly adhere sheets over area to receive waterproofing. Accurately align sheets and maintain uniform 2-1/2-inch- (64-mm-) minimum lap widths and end laps. Overlap and seal seams, and stagger end laps to ensure watertight installation.

1. When ambient and substrate temperatures range between 25 and 40 deg F (minus 4 and plus 5 deg C), install self-adhering, modified bituminous sheets produced for low-temperature application. Do not use low-temperature sheets if ambient or substrate temperature is higher than 60 deg F (16 deg C).

D. Horizontal Application: Apply sheets from low to high points to ensure that laps shed water.

E. Apply continuous sheets over already-installed sheet strips, bridging substrate cracks, construction, and contraction joints.

F. Seal edges of sheet-waterproofing terminations with mastic.

G. Repair tears, voids, and lapped seams in waterproofing not complying with requirements. Slit and flatten fishmouths and blisters. Patch with sheet waterproofing extending 6 inches (150 mm) beyond repaired areas in all directions.

H. Immediately install protection course with butted joints over waterproofing membrane.

3.3 PROTECTION, REPAIR, AND CLEANING

A. Do not permit foot traffic on unprotected membrane.

B. Correct deficiencies in or remove waterproofing that does not comply with requirements; repair substrates, reapply waterproofing, and repair sheet flashings.

C. Clean spillage and soiling from adjacent construction using cleaning agents and procedures recommended in writing by manufacturer of affected construction.

END OF SECTION 071326

SECTION 07 17 16 – BENTONITE WATERPROOFING (ELEVATOR PIT)

PART 1 - GENERAL

1.1 SUMMARY

A. Section Includes:

1. Bentonite composite sheet waterproofing
2. Molded sheet drainage panels

1.2 RELATED REQUIREMENTS

1. Section 03 10 00 "Cast-in-Place Concrete" for forms, waterstops, and concrete placement.

2. Division 07 waterproofing and air barrier Sections for flexible flashing that may be part of adjoining waterproofing and air barrier work.

3. Section 31 202 00Earthwork for excavating and backfilling[, including requirements for preparation of substrates to receive bentonite waterproofing].

4. Section 31 22 22 - Trenching Backfilling" for permanent below-grade support systems that require blind-side waterproofing[, including requirements for preparation of substrates to receive bentonite waterproofing].

B. References, General: Versions of the following standards current as of the date of issue of the project apply to the Work of this Section.

C. ASTM International (ASTM): www.astm.org:

1. ASTM C920 - Standard Specification for Elastomeric Joint Sealants
2. ASTM D412 – Standard Test Methods for Vulcanized Rubber and Thermoplastic Elastomers—Tension
3. ASTM D5385 - Standard Test Method for Hydrostatic Pressure Resistance of Waterproofing Membranes
4. ASTM E154 - Standard Test Methods for Water Vapor Retarders Used in Contact with Earth Under Concrete Slabs, on Walls, or as Ground Cover
5. ASTM E96/E 96M - Standard Test Methods for Water Vapor Transmission of Materials
6. ASTM D1004 Test Method for initial Tear Resistance of Plastics Film and Sheeting
7. ASTM D1505 Test Method for Density of Plastics by the Density-Gradient Technique
8. ASTM D1603 Test Method for Carbon Black in Olefin Plastics
9. ASTM D3895 Test Method for Oxidative Induction Time of Polyolefin’s by Thermal Analysis
10. ASTM D4833 Test Method for Index Puncture Resistance of Geotextiles, Geomembranes and Related Products
11. ASTM D5199 Test Method for Measuring Nominal Thickness of Geotextiles and Geomembranes
12. ASTM D5397 Procedure to perform a single Point Notched Constant Tensile Load – (SP-NCTL) Test; Appendix
13. ASTM D6392 Determining the Integrity of Non-Reinforced Geomembrane Seams Produced Using Thermo-Fusion Methods
14. ASTM D6693 Test Method for Determining Tensile Properties of Nonreinforced Polyethylene and Nonreinforced Flexible Polypropylene Geomembranes

D. U. S. Environmental Protection Agency (EPA): www.epa.gov:

1. 40 CFR 59, Subpart D - National Volatile Organic Compound Emission Standards for Architectural Coatings

1.3 ADMINISTRATIVE REQUIREMENTS

A. Preinstallation Conference: Conduct conference at Project Site.

1. Review requirements for waterproofing products and installation, including surface preparation, substrate conditions, project and manufacturer's details, installation procedures, mockups, testing and inspection requirements, protection and repairs, and coordination and sequencing of waterproofing work with work of other Sections.

1.4 ACTION SUBMITTALS

A. Product Data: For each type of waterproofing product specified, including:

1. Technical data indicating compliance with requirements.

2. Substrate preparation instructions and recommendations.

B. Shop Drawings: Show locations for waterproofing system components. Show details for each type of substrate, joints, corners, and edge conditions, including flashings, counterflashings, penetrations, transitions, and terminations.

1.5 INFORMATIONAL SUBMITTALS

A. Material Certificates: For each type of HDPE/bentonite waterproofing, from manufacturer.

B. Qualification Data: For Installer, manufacturer[, and waterproofing Inspector].

1. Certification of manufacturer's approval of Installer.

C. Product Test Reports: Test data for waterproofing products and waterproofing system, by qualified testing agency, indicating proposed waterproofing meets performance requirements, when requested by Architect.

D. Warranty: Sample of manufacturer and installer special warranties.

E. Field quality control reports.

1.6 QUALITY ASSURANCE

A. Installer Qualifications: A manufacturer-approved firm with minimum [three] years experience in installation of specified products in successful use on similar projects, employing workers trained by manufacturer, including a full-time on-site supervisor with a minimum of [ten] years experience installing similar work, and able to communicate verbally with Contractor[, Architect,] and employees.

B. Manufacturer Qualifications: A qualified manufacturer with minimum thirty years experience in manufacture of waterproofing as one of its principal products. Manufacturer shall provide field service representation during construction, approving an acceptable installer, recommending appropriate installation methods, and conducting a final field visit of the waterproofing system applied.

1. Manufacturer's product submitted has been in satisfactory operation on five similar installations for at least ten years.

2. Approval of Manufacturers and Comparable Products: [Submit] [Prime Bidder must submit] the following in accordance with project substitution requirements, within time allowed for substitution review:

a. Product data

b. Sample shop drawings from similar project.
c. Project references: Minimum of five installations of similar system not less than ten years old, with Owner and Architect contact information.
d. Name and resume of proposed qualified Inspector.
e. Sample warranty from the manufacturer or applicator.

C. Pre-Waterproofing Conference: Hold a pre-waterproofing installation meeting prior to commencement of field installation to establish procedures to maintain required working conditions and to coordinate section work with shotcrete installation and adjacent work. Verify that final waterproofing details comply with waterproofing manufacturer's current installation requirements and recommendations. manufacturer's representative, Waterproofing Foreman, Consultant, and all other pertinent parties shall attend this meeting.

D. Water sample test: Waterproofing contractor shall supply project site water sample to waterproofing membrane manufacturer for analysis. Manufacturer shall conduct test free of charge. Contractor is responsible for collection and shipment of two (2) liter of actual site water. Ship the water in uncontaminated, sealed plastic containers. Ship the sample to Tremco. Provide the project name, city and state along with the return address to forward test results.

E. Mockups: Provide waterproofing mockup application within mockups required in other sections, or if not specified, in an area of not less than 150 sq. ft. (14 sq. m) of surface where directed by Architect for each type of substrate condition. Include examples of surface preparation, crack and joint treatment, waterproofing application, and flashing, transition, and termination conditions, to set quality standards for execution.

1. Include intersection of waterproofing with adjacent waterproofing and moisture control systems.

1.7 DELIVERY, STORAGE AND HANDLING

A. Accept materials on site in manufacturer's unopened original packaging.

B. Store products in weather protected environment, clear of ground and moisture, within temperature ranges recommended by waterproofing manufacturer.

C. Construction Waste: Store and dispose of packaging materials and construction waste in accordance with requirements of Division 01 Section Temporary Facilities and Controls."

1.8 ENVIRONMENTAL REQUIREMENTS

A. Weather Limitations: Proceed with installation only when existing and forecasted weather conditions permit bentonite waterproofing to be installed according to manufacturers' written instructions and warranty requirements.

1. Do not install waterproofing or weld seams during rain, mist or heavy fog. If rain, mist or snow is anticipated before the membrane is compacted below-grade, cover any exposed bentonite or seams with min. 6 mil polyethylene sheet.

2. Placing bentonite clay products on damp surfaces is allowed if approved in writing by manufacturer.

1.9 SCHEDULING

A. Schedule work so waterproofing applications may be inspected prior to concealment.

1.10 WARRANTY

A. Special Manufacturer's Warranty: Manufacturer's standard form in which waterproofing manufacturer agrees to furnish waterproofing material to repair or replace those materials installed according to manufacturer's written instructions that exhibit material defects or otherwise fail to perform as specified under normal use within warranty period specified.

1. Access for Repair: Owner shall provide unimpeded access to the Project and the waterproofing system for purposes of testing, leak investigation, and repair, and shall reinstall removed cladding and overburden materials upon completion of repair.

2. Cost Limitation: Manufacturer's obligation for repair or replacement shall be limited to the replacement cost of materials. Including labor.

3. Warranty Period: 10]years date of Substantial Completion.

4. First 2 years of labor shall be provided by the waterproofing applicator.

B. Issuance of Manufacturer's System Warranty requires the following:

1. Manufacturer's Approved Applicator to install waterproofing system.
2. In Part 3 work, install waterstops in all applicable horizontal and vertical cold-pour shotcrete construction joints and shotcrete lift joints. Manufacturer's warranty shall be independent from any other warranties made by the Contractor under requirements of the Contract Documents and may run concurrent with said warranties.
3. PRODUCTS

1.11 MANUFACTURERS

A. Basis-of-Design Products: Provide waterproofing products manufactured by **Tremco, Inc., Commercial Sealants and Waterproofing Division,** Beachwood OH; (866) 321-6357; email: techresources@tremcoinc.com; www.tremcosealants.com.

B. Source Limitations: Provide waterproofing system materials and accessory products from Tremco, a single-source system manufacturer

1.12 PERFORMANCE REQUIREMENTS

A. General: Waterproofing system shall be capable of performing as a continuous watertight installation and as a moisture drainage plane transitioned to adjacent flashings and discharging water to the building exterior. Waterproofing shall accommodate normal substrate movement, construction material transitions, opening transitions, penetrations, and perimeter conditions without resultant moisture deterioration.

B. Compatibility: Provide waterproofing system materials that are compatible with one another and with adjacent materials under conditions of service and application required, as demonstrated by waterproofing manufacturer based on testing and field experience.

1.13 WATERPROOFING MEMBRANE

A. Composite HDPE/Bentonite Membrane with Protective Facing: Composite membrane consisting of granular bentonite laminated to a 60-mil (1.5 mm) thick HDPE geomembrane liner for a composite weight of up to 1.0 lb/sq. ft. (4.88 kg/sq. m).

1. Products: Subject to compliance with requirements, [available products that may be incorporated into the Work include, but are not limited to, the following:

a. Basis of Design Product:**Tremco, Inc., Paraseal GM/LG - 60 mil**
b. Puncture Resistance: 400 lbf (1.78 kN) according to ASTM E 154.
c. Tensile Strength, Membrane: 4,000 psi (27.58 MPa) according to ASTM D 412.
d. Elongation, Percent: 700 percent according to ASTM D 412.
e. Resistance to Hydrostatic Head: 230 ft. (70.1 m) according to ASTM D 5385.
f. Vapor Permeance: 0.03 perms according to ASTM E 96.
g. VOC Content: 0 g/L.

1.14 ACCESSORY MATERIALS

A. Granular Bentonite: Sodium bentonite clay containing a minimum of 90 percent montmorillonite (hydrated aluminum silicate), with a minimum of 90 percent passing a No. 20 (0.85-mm) sieve.

a. Basis of Design Product – **Tremco, Inc., Paragranular**

B. Bentonite Mastic: Trowelable consistency, bentonite compound, specifically formulated for application at joints and penetrations.

a. Basis of Design Product – **Tremco, Inc., Paramastic**

C. Termination Bar: Extruded-aluminum or formed-stainless-steel bars with upper flange to receive sealant.

a. Basis of Design Product – **Tremco, Inc., Paraterm Bar**

D. Plastic Protection Sheet: Polyethylene sheeting complying with ASTM D 4397; thickness recommended by waterproofing manufacturer to suit application but at least 6 mils (0.15 mm) thick.

E. Cement Grout Patching Material: Manufacturer's recommended grout mix compatible with substrate being patched.

F. Masonry Fasteners: Case-hardened nails or hardened-steel, powder-actuated fasteners. Depending on manufacturer's written requirements, provide 1/2- or 1-inch- (12- or 25-mm-) diameter washers under fastener heads.

G. Tapes: Waterproofing manufacturer's recommended tape for joints between sheets, membranes, or panels. Use with recommended adhesive bonding primer.

1. Reinforced Overlap Seam Tape: Reinforced, rubberized-asphaltic waterproofing seam tape 4-inch (102 mm) wide by 60 mils (1.5 mm) thick for sealing membrane overlaps.

a. Basis of Design Product **– Tremco, Inc., Permanent Seam Tape**

2. Non-Reinforced Overlap Tape: Non-reinforced, adhesive tape of partially cross-linked polymeric elastomers 2 by 1/8 inch (50 by 3.2 mm) for molding form-fit seals around contours and for taping seams within overlaps.

a. Basis of Design Product – **Tremco, Inc., Para JT**

3. Bentonite Laminate Tape: Pressure sensitive, double-sided tape laminate of bentonite sandwiched between a netting and non-woven fabric for wrapping through-concrete imbeds and other detailing.

a. Basis of Design Product – **Tremco, Inc., Parastick 'n' Dry**

H. Sealants: As recommended in writing by waterproofing manufacturer. Comply with requirements specified in Division 07 Section "Joint Sealants."

a. Basis of Design Product – **Tremco, Inc., Dymonic 100**

I. Waterstops: Flexible, reinforced, bentonite-laminate waterstop strips 1/2 by 1 inch (12 by 25 mm) with pressure-sensitive adhesive backing for sealing static cold joints in concrete.

a. Basis of Design Product – **Tremco, Inc., Superstop**

J. Joint Sealants: Termination Seals:

1. Single Component, Nonsag, Urethane Joint Sealant: ASTM C 920, Type S, Grade NS, Class 50, for Use NT:

a. Basis of Design Product – **Tremco, Inc., Dymonic 100**

1.15 WATERPROOFING PROTECTION AND DRAINAGE

A. Protection Course: Not required

B. **Nonwoven-Geotextile-Faced, Molded-Sheet Drainage Panel**: Manufactured composite subsurface drainage panels consisting of a nonwoven, spun-bonded polypropylene facing laminated to one side of a studded, non-biodegradable, polystyrene drainage core.

1. Basis of Design: **Tremco, TREMDrain.**
2. Flow Capacity, per unit width, ASTM D 4716: 9 gpm/ft. (112 lpm/m).
3. Flow Rate, ASTM D 4491: 165 gpm/ft2 (6,724 lpm/m2).
4. Apparent Opening Size: No. 70 sieve (210 micron).
5. Puncture Strength, ASTM D 4833: 65 lb (289 N).
6. Core Compressive Strength, ASTM D 1621: 10,800 lb/ft2 (527 kN/m2).
7. Thickness: 0.25 inch (6.35 mm).
8.

PART 2 - EXECUTION

2.1 EXAMINATION

A. Surface Condition: Before applying waterproofing materials, examine substrate and conditions to ensure substrates and conditions.

B. Proceed with installation only after unsatisfactory conditions have been corrected.

2.2 INTERFACE WITH OTHER WORK

A. Sequencing of Work: Coordinate sequencing of waterproofing work with work of other sections that form portions of building envelope moisture control to ensure that flashings and transition materials can be properly installed and inspected.

B. Subsequent Work: Coordinate waterproofing work with work of other sections installed subsequent to waterproofing to ensure complete inspection of installed waterproofing and sealing of waterproofing penetrations necessitated by subsequent work.

2.3 PREPARATION

A. Clean, prepare, and treat substrates.

B. Formed Concrete Surfaces: Remove fins and projections. Fill voids, rock pockets, form-tie holes, and other defects greater than 1/2 inch (12 mm) in depth in accordance with manufacturer's written instructions.

C. Excavation Support and Protection System: If water is seeping, use plastic protection sheets or other suitable means to prevent wetting the bentonite waterproofing. Fill minor gaps and spaces 1 inch (25 mm) wide or wider with wood, metal, concrete, or other appropriate filling material. Cover or fill large voids and crevices with cement mortar.

2.4 INSTALLATION, GENERAL

A. Install waterproofing and accessories according to manufacturer's written instructions.

1. Apply Paragranular around penetrations in horizontal surfaces and changes in plane according to manufacturer's details.

2. Apply Paramastic at changes of plane, construction joints in substrate, projections, and penetrations.

3. The HDPE liner system shall be installed as shown on the Contract Drawings and as recommended by the manufacturer. Where manufacturer installation guidelines are more stringent that specified herein, the manufacturer guidelines shall be adhered to. The Contractor shall be responsible for quality assurance during the installation procedures.

B. The Installer, the waterproofing material manufacturer's representative, and the Waterproofing Consultant shall examine the substrates and other conditions under which this section's work shall be performed. The Waterproofing manufacturer's representative shall provide a letter chronicling all circumstances detrimental to the proper completion of the work. Do not proceed with work until unsatisfactory conditions are corrected and are acceptable for compliance with manufacturer's warranty requirements.

C. The Shoring Contractor shall install cement board at grade line over future cuts in the beams to prevent damage to the waterproofing membrane or the Contractor may precut the front side of the steel "I" beams.

2.5 SURFACE PREPARATION

A. Protect adjacent work areas and finish surfaces from damage or contamination from waterproofing products during installation operations.

B. Under Slab Assembly: A minimum 2-inch mud slab shall be installed across the entire project site with the membrane system being installed on top of the mud slab. A second 2-inch protection slab shall be poured over the membrane to provide a protection surface. A mat slab will be poured in appropriate sequencing.

C. Wood lagging shoring: Excavation contractor shall provide wood lagging shoring extending to the lowest level of the waterproofing installation. All lagging boards in hydrostatic condition must be grouted in place. Any voids or cavities exterior of the lagging filled cementitious grout. Interior surface of lagging boards should be monolithic and tight together with gaps less than ½” inch. Fill gaps in excess of ½” inch with cementitious grout.

D. Clean expansion joints, prime, fit with a proper compression seal product and seal with polyurethane sealant or applicable expansion joint assembly product manufactured by others. Expansion joint material manufacturer is responsible for water tightness of the expansion joint material.

E. At all locations where water seepage is occurring through wood lagging, Contractor shall install a 12-mil thick visqueen layer directly over the lagging prior to installation of the waterproofing system.

2.6 FIELD SEAMS AND PANEL OVERLAPS

A. Seams shall meet the following requirements:

1. Maximum extent possible, orient seams parallel to line of slope, i.e., down and not across slope.
2. Minimize number of field seams in corners, odd-shaped geometric locations and outside corners.
3. Slop seams (panels) shall extend minimum of five-feet beyond grade break into flat area.
4. Align seam overlaps consistent with requirements of welding equipment being used. 5 to 6-inch overlap is commonly suggested.
5. Provide at least one Certified Applicator who shall provide direct supervision over other welders as necessary.

B. Extrusion Welding

1. Hot air tack adjacent pieces together using procedures that do not damage the Geomembrane.
2. Clean Geomembrane surface by disc grinder or equivalent.
3. Purge welding apparatus of heat-degraded extrudate before welding.

C. Hot-Wedge Welding

1. Welding apparatus shall be self-propelled device equipped with electronic controller that displays applicable temperatures.
2. Clean seam area of dust, mud, moisture and debris immediately ahead of hot wedge welder.
3. Protect against moisture build-up between sheets

D. Penetrations

1. Provide all necessary details and materials to properly seal any penetrations to the Geomembrane (i.e. boots, gaskets and clamps).
2. Install in accordance with manufacturer’s recommendations

E. Trial Welds

1. Perform trial welds on Geomembrane samples to verify welding equipment is operating properly.
2. Make trial welds under same surface and environmental conditions as production welds, i.e., in contact with subgrade and similar ambient temperature.
3. Minimum of two trial welds per day, per welding apparatus, one made prior to start of work and one completed at mid shift
4. Cut four, one-inch wide by six-inch ling test strips from the trial weld.
5. Quantitatively test specimens for peel adhesion, and then for shear strength.
6. Trial weld specimens shall pass when the results are achieved in both peel and shear test.
    a. Peel strength (fusion): 98 pounds per inch, ASTM D 6392.
    b. Peel Strength (extrusion): 78 pounds per inch, ASTM D 6392.
    c. Shear Strength: 121 pounds per inch, ASTM D 6392.

7. The break, when peel testing, occurs in the liner material itself, not through peel separation (FTB).

8. The break is ductile.

9. Repeat the trial weld, in it's entirely, when any of trial weld samples fail in either peel or shear.

10. No welding equipment or welder shall be allowed to perform production welds until equipment and welders have successfully completed trial weld.

11. Seaming shall not proceed when ambient air temperature or adverse weather conditions jeopardize integrity of liner installation. Contractor shall demonstrate that completing acceptable trial welds can perform acceptable seaming.

12. Field seams shall be tested using appropriate test standards and manufacturers recommended and approved methods. The testing of the field seams shall be the responsibility of the Contractor and should meet the QC criteria recommended by the manufacturer. The methods applied for testing field seams or wells shall include non-destructive testing, destructive testing, field vacuum testing, laboratory testing, etc., and other recommended and applicable tests.

13. Upon completed tests on the exposed black H.D.P.E. seams, install a continuous layer of three inch wide Para Stick N' Dry tape over, adhere with Paraprimer.

2.7 MEMBRANE INSTALLATION OVER COMPOSITE DRAINAGE BOARD AT LAGGING WALLS

A. Install Paraseal GM membrane with the gray, bentonite side to be in direct contact with shotcrete and over a continuous layer of TREMdrain drainage board.

B. On shoring walls to receive shotcrete, install membrane with a minimum 6 inch sheet edge overlaps. Tack membrane to highest point of shoring. All overlaps must be either extrusion or wedge welded. Upon completion install a three wide strip of Para Stick N' Dry tape centered over completed HDPE weld and adhere with Paraprimer.

C. Verify which penetrations must be accessed after concrete placement for completion of waterproofing detail treatment and ensure that sufficient access to membrane is provided within a wood formed box out; verify which penetrations will not be accessed after concrete placement for completion of waterproofing detail treatment and ensure that final detailing procedures are completed prior to shotcreting/guniting; waterproof penetrations in accord with manufacturer's current procedures; contact manufacturer for procedures at project conditions not provided in installation manuals.

D. There should be no rebar anchorage & shotcrete wire screed pins that penetrate into the installed membrane. Threaded rods must be welded to the face of the steel "I" beam. Cut Paraseal GM close around welded rod. Install closed cell neoprene rubber washer with galvanized square plate washers placed over and bolt down tight to compress rubber washers with 1/2 inch stainless steel nut and washer. Finally, caulk over entire assembly with either Vulkem 116 or Dymeric 240 FC polyurethane sealant.

E. Prevent waterproofing products from hydrating before material is contained with concrete, shotcrete, or backfill. When threat of rain is imminent, installed products not already contained should be covered with polyethylene sheeting to decrease the chance of hydration. After any precipitation, pump standing water off waterproofing as soon as possible and repair damaged membrane.

F. Inspect finished membrane installation and repair any damaged material prior to shotcrete placement. **Assure that membrane is not displaced during shotcrete placement.**

G. Complete waterproofing details and terminations at grade line coordinating with other trades.

H. Cut and secure to fit tightly around all tieback heads. Then install 26 gauge fabricated sheet metal cover over tieback head. Prior to installing cover, fill cavity of cover with a 50/50 mix of mastic and water stoppage (granular bentonite). Secure flanges of metal cover to lagging with fasteners. Cut and secure an extra section of membrane around the sheet metal cover; installing the membrane section over the flanges and extending outward from the cover a minimum 12-inch radius. Finally, detail around the base of sheet metal cover with ¾" inch cant of mastic. A preformed TB-boot can be used in lieu of the fabricated sheet metal box as a tie-back head cover following the instructions above.

2.8 MEMBRANE INSTALLATION AT CMU BLOCK WALLS

A. Install membrane sheets in vertical or horizontal lifts with HDPE-side facing applicator to prepared surfaces conforming to manufacturer's requirements.

B. Securely fasten membrane sheets to wall surfaces with fasteners along top edge at 12 inches on center. Securely fasten at 24 inches on center along vertical edge to be overlapped by subsequent membrane sheet. Align fasteners to be fully covered by overlapping membrane.

C. Install subsequent membrane sheets to overlap previous sheets 3-1/2 inches. Align overlaps and effect overlap seals.

D. Start horizontal orientation at lowest portion of wall and overlap in shingle fashion with staggered end laps.

E. Extend membrane onto footing surfaces 6-inch minimum. Overlap below-slab membrane 6-inch minimum. Securely fasten 18 inches on center to tops of footings and horizontal shelves. Cover fasteners completely with seam tape and roll-press affecting a vapor tight seal.

F. Waterproof penetrations in accord with manufacturer's recommendations to affect a vapor tight seal.

G. Install composite drainage board over entire membrane surface in accordance with manufacturer's installation criteria.

2.9 FIELD QUALITY CONTROL

A. Contractor's Inspector: Contractor shall engage manufacturer's qualified Inspector full-time during the Work to perform tests and inspections, including documenting of waterproofing prior to concealment.

1. Continuous non-destructive testing of all membrane seams in accordance with

a. Vacuum Test: In accordance with ASTM D 5641, Geomembrane Seam Evaluation by Vacuum Chamber

b. Air Pressure Testing: in accordance with ASTM D 5820, Pressurized Air Channel Evaluation of Dual Seamed Geomembranes

c. Copper Spark Test: In accordance with ASTM D6365, Testing Extrusion Weld Seams with embedded copper wire

2. Provide written report of tests and inspections.

B. Correction: Correct deficient applications not passing tests and inspections, make necessary repairs, and retest as required to demonstrate compliance with requirements.

C. Defects and Repairs

1. Examine all seams and non-seam areas of the Geomembrane for defects, holes, blisters, undispersed raw materials, and any sign of contamination by foreign matter.

2. Repair and non-destructively test each suspect location in both seam and non-seam areas. Do not cover Geomembrane at locations that have been repaired until test results with passing values are available.

3. Remove damaged Geomembrane and replace with acceptable Geomembrane materials if damage cannot be satisfactorily repaired.

4. Repair any portion of unsatisfactory Geomembrane or seam area failing destructive or non-destructive test.

5. Contractor shall be responsible for repair of defective areas.

6. Agreement upon appropriate repair method shall be decided between Architect and Contractor by using one of the following repair methods:

    a. Patching – Used to repair large holes, tears, undispersed raw materials and contamination by foreign matter.
    b. Abrading and Re-welding used to repair short section of seam.
    c. Spot Welding – Used to repair pinholes or other minor, localized flaws or where Geomembrane thickness has been reduced.
    d. Capping – Used to repair long lengths of failed seams.
    e. Flap Welding – Used to extrusion weld the flap (excess outer portion) of fusion weld in lieu of full cap.
    f. Remove unacceptable seam and replace with new material.

7. The following procedures shall be observed when repair method is used:

    a. Geomembrane surfaces shall be clean and dry at time of repair.
    b. Surfaces of polyethylene that are to be repaired by extrusion welds shall be lightly abraded to ensure cleanliness.
    c. Extend patches or caps at least 6 inches for extrusion welds and 4-inches for wedge welds beyond edge of defect, and around all corners of patch material.

8. Repair Verification

    a. Number and log each patch repair.
    b. Non-destructively test each repair using methods epecified in this specification.

2.10 CLEANING AND PROTECTING

A. Clean spills, stains, and overspray resulting application utilizing cleaning agents recommended by manufacturers of affected construction. Remove masking materials.

B. Protect waterproofing from damage from subsequent work. Protect waterproofing materials from exposure to UV light for period in excess of that acceptable to waterproofing manufacturer; replace overexposed materials and retest.

END OF SECTION 07 17 16.05

THIS PAGE LEFT INTENTIONALLY BLANK

SECTION 07 21 00 - THERMAL INSULATION

PART 1 - GENERAL

1.1 SUMMARY

A. This Section includes the following:
   1. Sound Attenuation Batts.
   2. Self-supported, spray-applied foam insulation.
   3. Spray applied ignition barrier over foam insulation.

1.2 SUBMITTALS

A. Product Data: For each type of product indicated.
B. Samples for Verification: Full-size units for each type of exposed insulation indicated.
C. Product test reports.
D. Research/Evaluation Reports: For foam-plastic insulation.

1.3 QUALITY ASSURANCE

A. Source Limitations: Obtain each type of building insulation through one source from a single manufacturer, unless noted otherwise.
B. Fire-Test-Response Characteristics: Provide insulation and related materials with the fire-test-response characteristics indicated, as determined by testing identical products per test method indicated below by UL or another testing and inspecting agency acceptable to authorities having jurisdiction. Identify materials with appropriate markings of applicable testing and inspecting agency.
   1. Surface-Burning Characteristics: ASTM E 84.
   2. Fire-Resistance Ratings: ASTM E 119.
   3. Combustion Characteristics: ASTM E 136.

PART 2 - PRODUCTS

2.1 OPEN CELL SPRAY-APPLIED POLYURETHANE FOAM INSULATION

A. Manufacturer:
   1. Demilec (USA) LLC; Sealection 500
   2. Icynene
   3. Or Architect-approved equal.
B. Spray-Applied Semi-Rigid Polyurethane Insulation: Two component, open cell spray-applied Class I Rigid Spray Foam systems formulated using zero ozone depletion potential (ODP) blowing agents (245 fa and water) to meet the Class I requirements in accordance to ASTM E-84. This product is developed for air sealing (Air Barrier) and thermal insulation applications.
C. Physical Properties:

Method:	Description:	Value:
ASTM D1622	Density (core)	0.47 – 0.50 lbs/ft³
ASTM C518	Thermal Resistance 2 days @ 73.4˚ F. (23˚ C) (R-Value per inch) 32˚F (0˚C) / 77˚F (25˚C) 2x4 cavity = R13 2x6 cavity = R19	3.81 ft²h.˚F/BTU. In
ASTM D2856	Closed Cell Content (%)	< 90
ASTM D1623	Tensile Strength	5.6 lbf/in²
ASTM D2842	Water Absorption (% volume) (96 hrs. immersion)	25-50

ASTM E84	Surface Burning Characteristics, 6 inches thick	
	Flame Spread Index	21
	Smoke developed	216
ASTM E 96	Water Vapor Transmission (2-inches thick)	3.6 perms

D. Spray Applied Ignition Barrier to all exposed foam insulation:
   1. Demilec BlazeLok TB intumescent Coating
   2. Or Architect/Fire Marshall Approved Equal

2.2 SOUND ATTENUATION BATTS

A. Manufacturers:
   1. Johns Manville.
   2. Owens Corning.
   3. Or Equal
B. Unfaced, Flexible Glass-Fiber Acoustical Insulation: ASTM C 665, Type I (blankets without membrane facing); consisting of fibers; with maximum flame-spread and smoke-developed indexes of 10 and 10, respectively, passing ASTM E 136 for combustion characteristics.
C. Location: Around all restrooms, classrooms, offices and corridors. Also installed above ceilings in offices and around fire pump room. Provide batt thickness to completely fill void of metal stud framing.

PART 3 - EXECUTION

3.1 INSTALLATION, GENERAL

A. Comply with insulation manufacturer's written instructions applicable to products and application indicated.
B. Install insulation that is undamaged, dry, and unsoiled and that has not been left exposed at any time to ice, rain, and snow.
C. Extend insulation in thickness indicated to envelop entire area to be insulated. Cut and fit tightly around obstructions and fill voids with insulation. Remove projections that interfere with placement.
D. Water-Piping Coordination: If water piping is located within insulated exterior walls, coordinate location of piping to ensure that it is placed on warm side of insulation and insulation encapsulates piping.
E. For preformed insulating units, provide sizes to fit applications indicated and selected from manufacturer's standard thicknesses, widths, and lengths. Apply single layer of insulation units to produce thickness indicated unless multiple layers are otherwise shown or required to make up total thickness.

3.2 INSTALLATION OF GENERAL BUILDING INSULATION

A. Apply insulation units to substrates by method indicated, complying with manufacturer's written instructions. If no specific method is indicated, bond units to substrate with adhesive or use mechanical anchorage to provide permanent placement and support of units.
B. Install glass-fiber insulation in cavities formed by framing members according to the following requirements:
   1. Use insulation widths and lengths that fill the cavities formed by framing members. If more than one length is required to fill cavity, provide lengths that will produce a snug fit between ends.

2. Place insulation in cavities formed by framing members to produce a friction fit between edges of insulation and adjoining framing members.
3. Maintain 3-inch (76-mm) clearance of insulation around recessed lighting fixtures.
4. For metal-framed wall cavities where cavity heights exceed 96 inches (2438 mm), support unfaced blankets mechanically to metal studs.

C. Stuff glass-fiber loose-fill insulation into miscellaneous voids and cavity spaces where shown. Compact to approximately 40 percent of normal maximum volume equaling a density of approximately 2.5 lb/cu. ft. (40 kg/cu. m).

END OF SECTION 07 21 00

“THIS PAGE LEFT BLANK”

SECTION 07 27 26 - FLUID-APPLIED MEMBRANE AIR BARRIERS

PART 1 - GENERAL

1.1 SUMMARY

A. Section Includes:
   1. Vapor-permeable, fluid-applied air barriers.

1.2 PREINSTALLATION MEETINGS

A. Preinstallation Conference: Conduct conference at Project site.

1.3 ACTION SUBMITTALS

A. Product Data: For each type of product.

B. Shop Drawings: For air-barrier assemblies.

   1. Include details for substrate joints and cracks, counterflashing strips, penetrations, inside and outside corners, terminations, and tie-ins with adjoining construction.

1.4 INFORMATIONAL SUBMITTALS

A. Product certificates.

B. Product test reports.

C. Field quality-control reports.

1.5 QUALITY ASSURANCE

A. Installer Qualifications: An entity that employs installers and supervisors who are trained and approved by manufacturer.

B. Mockups: Build mockups to set quality standards for materials and execution.

PART 2 - PRODUCTS

2.1 MATERIALS

A. Source Limitations: Obtain primary air-barrier materials and air-barrier accessories from single source from single manufacturer.

B. VOC Content: 250 g/L or less when calculated according to 40 CFR 59, Subpart D (EPA Method 24) and complying with VOC content limits of authorities having jurisdiction.

C. Low-Emitting Materials: Air barriers shall comply with the testing and product requirements of the California Department of Health Services' "Standard Practice for the Testing of Volatile Organic Emissions from Various Sources Using Small-Scale Environmental Chambers."

2.2 PERFORMANCE REQUIREMENTS

A. Air-Barrier Performance: Air-barrier assembly and seals with adjacent construction shall be capable of performing as a continuous air barrier and as a liquid-water drainage plane flashed to discharge to the exterior incidental condensation or water penetration. Air-barrier assemblies shall be capable of accommodating substrate movement and of sealing substrate expansion and control joints, construction material changes, penetrations, and transitions at perimeter conditions without deterioration and air leakage exceeding specified limits.

B. Air-Barrier Assembly Air Leakage: Maximum **0.04 cfm/sq. ft. of surface area at 1.57 lbf/sq. ft. (0.2 L/s x sq. m of surface area at 75 Pa)**, when tested according to ASTM E2357.

2.3 VAPOR PERMEABLE MEMBRANE AIR-BARRIER

1. Fluid-Applied, Vapor-Permeable Membrane Air Barrier: synthetic polymer membrane.
    a. Products: Subject to compliance with requirements, available products that may be incorporated into the Work include the following:
        1) Synthetic Polymer Membrane:
            a) Basis-of-Design: STO Flexl
            b) Or equal systems- must be compatible with ICF construction

        2) Physical and Performance Properties:
            a) Air Permeance: Maximum 0.004 cfm/sq. ft. of surface area at 1.57-lbf/sq. ft. (0.02 L/s x sq. m of surface area at 75-Pa) pressure difference; ASTM E 2178.
            b) Vapor Permeance: Minimum 1 perms (580 ng/Pa x s x sq. m); ASTM E 96/E 96M.
            c) Ultimate Elongation: Minimum 200 percent; ASTM D 412, Die C.
            d) Retain "UV Resistance" Subparagraph below if required. Manufacturers generally specify covering bituminous air barriers within 30 days except for products with modified UV resistance; consult manufacturers for recommendations and product availability.
            e) UV Resistance: Can be exposed to sunlight for 90 days according to manufacturer's written instructions.

2.4 ACCESSORY MATERIALS

A. Requirement: Provide primers, transition strips, termination strips, joint reinforcing fabric and strips, joint sealants, counterflashing strips, flashing sheets and metal termination bars,

termination mastic, substrate patching materials, adhesives, tapes, foam sealants, lap sealants, and other accessory materials that are recommended in writing by air-barrier manufacturer to produce a complete air-barrier assembly and that are compatible with primary air-barrier material and adjacent construction to which they may seal.

PART 3 - EXECUTION

3.1 SURFACE PREPARATION

A. Clean, prepare, treat, fill, and seal substrate and joints and cracks in substrate according to manufacturer's written instructions and details. Provide clean, dust-free, and dry substrate for air-barrier application.

B. Mask off adjoining surfaces not covered by air barrier to prevent spillage and overspray affecting other construction.

C. Remove fins, ridges, mortar, and other projections and fill honeycomb, aggregate pockets, holes, and other voids in concrete with substrate-patching material.

D. Remove excess mortar from masonry ties, shelf angles, and other obstructions.

E. At changes in substrate plane, apply sealant or termination mastic beads at sharp corners and edges to form a smooth transition from one plane to another.

F. Bridge expansion joints and discontinuous wall-to-wall, deck-to-wall, and deck-to-deck joints with air-barrier accessory material that accommodates joint movement according to manufacturer's written instructions and details.

3.2 INSTALLATION

A. Install materials according to air-barrier manufacturer's written instructions and details to form a seal with adjacent construction and ensure continuity of air and water barrier.
   1. Unless manufacturer recommends in writing against priming, apply primer to substrates at required rate and allow it to dry.
   2. Apply primer to substrates at required rate and allow it to dry. Limit priming to areas that will be covered by air-barrier material on same day. Reprime areas exposed for more than 24 hours.

B. Connect and seal exterior wall air-barrier material continuously to floor-to-floor construction, exterior glazing and window systems, glazed curtain-wall systems, storefront systems, exterior louvers, exterior door framing, and other construction used in exterior wall openings, using accessory materials.

C. Wall Openings: Prime concealed, perimeter frame surfaces of windows, curtain walls, storefronts, and doors. Apply transition strip so that a minimum of 3 inches (75 mm) of coverage is achieved over each substrate. Maintain 3 inches (75 mm) of full contact over firm bearing to perimeter frames, with not less than 1 inch (25 mm) of full contact.

D. Repair punctures, voids, and deficient lapped seams in strips and transition strips. Slit and flatten fishmouths and blisters. Patch with transition strips extending 6 inches (150 mm) beyond repaired areas in strip direction.

E. Apply continuous unbroken air-barrier material to substrates according to the following thickness. Apply air-barrier material in full contact around protrusions such as masonry ties.
   1. Vapor-Permeable Air Barrier: Total dry film thickness as recommended in writing by manufacturer to comply with performance requirements, but not less than 35 mils (0.9 mm), applied in one or more equal coats.

F. Do not cover air barrier until it has been tested and inspected by testing agency.

G. Correct deficiencies in or remove air barrier that does not comply with requirements; repair substrates and reapply air-barrier components.

3.3 FIELD QUALITY CONTROL

A. Testing Agency: Engage a qualified testing agency to perform tests and inspections.

B. Tests: As determined by testing agency from among the following tests:

   1. Air-barrier dry film thickness.
   2. Air-Leakage-Location Testing: Air-barrier assemblies will be tested for evidence of air leakage.
   3. Air-Leakage-Volume Testing: Air-barrier assemblies will be tested for air-leakage rate according to ASTM E783 or ASTM E2357.
   4. Adhesion Testing: Air-barrier assemblies will be tested for required adhesion to substrate according to ASTM D4541 for each **600 sq. ft. (56 sq. m)** of installed air barrier or part thereof.

C. Air barriers will be considered defective if they do not pass tests and inspections.

   1. Apply additional air-barrier material, according to manufacturer's written instructions, where inspection results indicate insufficient thickness.
   2. Remove and replace deficient air-barrier components for retesting as specified above.

D. Repair damage to air barriers caused by testing; follow manufacturer's written instructions.

E. Prepare test and inspection reports.

3.4 CLEANING AND PROTECTION

A. Protect air-barrier system from damage during application and remainder of construction period, according to manufacturer's written instructions.

B. Remove masking materials after installation.

END OF SECTION 072726

SECTION 074100
PREFORMED METAL STANDING SEAM ROOFING

PART 1 - GENERAL

1.1 DESCRIPTION OF WORK

A. This section covers the pre-finished, pre-fabricated Architectural standing seam roof system. All metal trim, accessories, fasteners, insulation and sealants indicated on the drawings as part of this section.
B. Drawings and general provisions of the Contract, including general and Supplementary Conditions and Division 01 Specifications, apply to this section.
C. Related Work Specified Elsewhere
    1. Roof Deck structural steel, flat roof systems, perimeter edge systems. Roof hatches, firestopping not included in this section.

1.2 SUMMARY

A. Section Includes
    1. Factory formed Standing Seam metal roof panels
B. Related work specified elsewhere. (Note: select from the below or add appropriate sections)
    1. Section 05100 - Structural Steel
    2. Section 05200 or 05400 - Steel Joists
    3. Section 07600 - Flashing and Sheet Metal

1.3 DEFINITIONS

A. Metal Roof Panel Assembly**:** Metal roof panels, attachment system components, miscellaneous metal framing, thermal, and accessories necessary for a complete weathertight roofing system.
B. References:
    1. American Society for Testing and Materials (ASTM)
        a. ASTM A 653: Steel Sheet, Zinc Coated by the Hot Dip Process
        b. ASTM A 792: Steel Sheet, Aluminum-Zinc Alloy Coated by the Hot Dip Process
        c. ASTM B 209: Aluminum and Aluminum Alloy Sheet and Plate
        d. ASTM B370 Standard Specification for Copper Sheet and Strip for Building Construction
    2. Sheet Metal and Air Conditioning Contractors National Association (SMACNA)
        a. SMACNA Architectural Sheet Metal Manual, 1993 edition
    3. American Iron and Steel Institute (AISI)
        a. AISI Cold Formed Steel Design Manual
    4. Aluminum Association
        a. Aluminum Design Manual
    5. Metal Construction Association

   a. Preformed metal Wall Guidelines
6. Code References
   a. ASCE, Minimum Loads for Buildings and Other Structures
   b. BOCA National Building Codes
   c. UBC Uniform Building Code
   d. SBC Standard Building Code

1.4 QUALITY ASSURANCE

A. Petersen Aluminum Corp, Acworth, GA, 800-272-4482 products establish a minimum of quality required.
B. Manufacturer and erector shall demonstrate experience of a minimum of five (5) years in this type of project.
C. Panels shall be factory-produced only. No portable, installer-owned or installer-rented machines will be permitted.

1.5 SUBSTITUTIONS

A. The material, products and equipment specified in this section establish a standard for required function, dimension, appearance and quality to be met by any proposed substitution.

1.6 SYSTEM DESCRIPTION

A. Material to comply with:
   1. ASTM B209 Standard Specification for Aluminum and Aluminum-Alloy Sheet and Plate

1.6 ROOF SYSTEM PERFORMANCE TESTING

A. General Performance: Metal roof panels shall comply with performance requirements without failure due to defective manufacture, fabrication, installation or other defects in construction.
B. Roof System shall be designed to meet Standard Building Code Wind Load requirements.
C. Panels to meet:
   1. Water Penetration: When tested per ASTM E-283/1680 and ASTM E-331/1646 there shall be no uncontrolled water penetration or air infiltration through the panel joints.
   2. Roof System shall be designed to meet a UL Class 90 wind uplift in accordance with UL standard 580 and panel system shall be ASTM 1592 Tested and approved
   3. UL 2218 - Impact Resistance rated

1.7 WARRANTIES

A. Weathertight warranty: Manufacturer's standard form in which manufacturer agrees to repair or replace standing seam metal roof panel assemblies that fail to remain weathertight, including leaks, within specified warranty period.
    1. Warranty Period: 20 Years from date of Substantial Completion
B. Finish warranty: Manufacturer's standard form in which manufacturer agrees to repair finish or replace standing seam metal roof panels that show evidence of deterioration of factory-applied finish within specified warranty period.
    1. Exposed Panels Finish - deterioration includes the following:
        a. Color fading more than 5 hunter units when tested according to ASTM D 2244
        b. Chalking in excess of a No. 8 rating when tested according to ASTM D 4214
        c. Cracking, checking, peeling or failure of a paint to adhere to a bare metal.
    2. Warranty Period: 20 Years from the date of substantial completion
C. Applicator shall furnish written warranty for a two (2) year period from date of substantial completion of building covering repairs required to maintain roof and flashings in watertight condition.

1.8 SUBMITTALS

A. Furnish detailed drawings showing profile and gauge of exterior sheets, location and type of fasteners, location, gauges, shape and method of attachment of all trim locations and types of sealants, and any other details as may be required for a weather-tight installation.
B. Provide finish samples of all colors specified.
C. Shop drawings: Show fabrication and installation layouts of metal roof panels, metal wall panels or metal soffit panels, details of edge conditions, side-seam joints, panel profiles, corners, anchorages, trim, flashings, closures and accessories, and special details. Distinguish between factory and field-assembled work
D. Coordination Drawings: Roof plans, drawn to scale, on which the following are shown and coordinated with each other, base don input from installer of the items involved:
    1. Roof panels and attachments
    2. Metal trusses, bracings and supports
    3. Roof-mounted items including snow guards and items mounted on roof curbs.
E. LEED Submittals
    1. Product Test reports for Credit SS 7.2. For roof panels, indicating that the panels comply with Solar Reflective Index requirement
    2. Product data for Credit MR 4.1 and credit MR 4.2: Indicating the percentages by weight of postconsumer and preconsumer recycled content for products having recycled content.

1.9 DELIVERY, STORAGE AND HANDLING

A. Ordering: Comply with manufacturer's ordering instruction and lead time requirements to avoid construction delays.

B. Deliver components, sheets, metal roof panels and other manufactured items so as not to be damaged or deformed. Package metal roof panels for protection during transportation and handling.
C. Unload, store and erect metal roof panels in a manner to prevent bending, warping, twisting and surface damage.
D. Stack metal roof panels on platforms or pallets, covered with suitable weathertight and ventilated covering. Store metal roof panels to ensure dryness. Do not store metal roof panels in contact with other materials that might cause staining, denting or other surface damage.
E. Protect strippable protective coating on any metal coated product from exposure to sunlight and high humidity, except to the extent necessary for material installation.

1.10 PROJECT CONDITIONS

A. Weather Limitations: proceed with installation only when existing and forecasted weather conditions permit metal roof panel work to be performed.
B. Field Measurements: Verify actual dimensions of construction contiguous with metal roof panels by field measurements before fabrication.

1.11 COORDINATION

A. Coordinate sizes and locations of roof curbs, equipment supports and roof penetrations with actual equipment provided.
B. Coordinate metal roof panels with rain drainage work, flashing, trim and construction of decks, parapet walls and other adjoining work to provide a leakproof, secure and noncorrosive installation.

PART 2 - PRODUCTS

2.1 PANEL DESIGN

A. General: Provide factory-formed metal roof panels designed to be installed by lapping and interconnecting raised side edges of adjacent panels with joint type indicated and mechanically attaching panels to supports using concealed clips in side laps. Include clips, cleats, pressure plates and accessories required for a weathertight installation.
B. Roof panels shall be standing seam Tite-Loc Plus in 18" widths with 2" high seams that are mechanically seamed together @ 180 degrees.
C. Panels to be produced with Factory supplied hot melt mastic in the seams.
D. Panels to be produced Striations w/Pencil Ribs.
E. Panels to be designed for attachment with concealed fastener clips, spaced as required by the manufacturer to provide for both positive and negative design loads, while allowing for the expansion and contraction of the entire roof system resulting from variations in temperature.
F. Forming: Use continuous end rolling method. No end laps on panels. No portable rollforming machines will be permitted on this project, no installer-owned or installer-

rented machines will be permitted. It is the intent of the Architect to provide Factory-Manufactured panel systems only for this project.

2.2 ACCEPTABLE MANUFACTURERS

A. This project is detailed around the roofing product of Petersen Aluminum Corporation Petersen Aluminum Corp, Acworth, GA, 800-272-4482, Tite-Loc Plus.

2.3 MATERIALS AND FINISHES

A. Preformed roofing panels shall be fabricated of .040 Aluminum
B. Color shall be Bone White
C. Finish shall be Kynar 500 or Hylar 5000 Fluorocarbon coating with a top side film thickness of 0.70 to 0.90 mil over a 0.25 to 0.3 mil prime coat to provide a total dry film thickness of 0.95 to 1.25 mil, to meet AAMA 621. Bottom side shall be coated with a primer with a dry film thickness of 0.25 mil. Finish shall conform to all tests for adhesions, flexibility and longevity as specified by Kynar 500 or Hylar 5000 finish supplier.
D. If Strippable coating to be applied on the pre-finished panels to the top side to protect the finish during fabrication, shipping and handling, film shall be removed before installation.
E. Trim: Trim shall be fabricated of the same material and finish to match the profile, and will be press broken in lengths of 10 to 12 feet. Trim shall be formed only by the manufacturer of their approved dealer. Trim to be erected in overlapped condition. Use lap strips only as indicated on drawings. Miter conditions shall be factory welded material to match the sheeting.
F. Closures: use composition or metal profiled closures at the top of each elevation to close ends of the panels. Metal closures to be made in the same material and finish as face sheet.
G. Fasteners: Fasteners shall be of type, material, size, corrosion resistance, holding power and other properties required to fasten miscellaneous framing members to substrates.
H. Substrate shall be Nailbase
I. Roofing Underlayment
    1. On all surfaces to be covered with roofing material, furnish and install a 40 mil “Peel & Stick membrane”, required as outlined by metal panel manufacturer. Membrane to be a minimum of 40 mil thickness, smooth, non-granular, high temperature. **Basis of design:** Carlisle WIP 300 HT High Temperature Protection Self Adhering Roofing Underlayment. Other acceptable manufacturers include:
        a. W.R Grace "Ice & water Shield"
        b. Interwrap Titanium PSU-30
        c. Carlisle CCW WIP 300HT
        d. Interwrap Titanium PSU
        e. Tamko TW Tile and Metal Underlayment
    2. Underlayment shall be laid in horizontal layers with joints lapped toward the eaves a minimum of 6”, and well secured along laps and at ends as necessary to

properly hold the felt in place. All underlayment shall be preserved unbroken and whole.

3. Peel and Stick Underlayment shall lap all hips and ridges at least 12” to form double thickness and shall be lapped 6” over the metal of any valley or built-in gutters and shall be installed as required by the Standing Seam Panel Manufacturer to attain the desired 20 Year Weathertightness Warranty.

J. Sealants
   1. Provide two-part polysulfide class B non-sag type for vertical and horizontal joints or
   2. one part polysulfide not containing pitch or phenolic extenders or
   3. Exterior grade silicone sealant recommended by roofing manufacturer or
   4. One part non-sag, gun grade exterior type polyurethane recommended by the roofing manufacturer.

2.4 FABRICATION

A. Comply with dimensions, profile limitations, gauges and fabrication details shown and if not shown, provide manufacturer's standard product fabrication.
B. Fabricate components of the system in factory, ready for field assembly.
C. Fabricate components and assemble units to comply with fire performance requirements specified.
D. Apply specified finishes in conformance with manufacturer's standard, and according to manufacturer's instructions.

PART 3 - EXECUTION

3.1 INSPECTION

A. Examine alignment of structural steel and related supports, primary and secondary roof framing, solid roof sheathing, prior to installation.
B. For the record, prepare written report, endorsed by installer, listing conditions detrimental to performance of the Work.
C. Proceed with installation only after unsatisfactory conditions have been corrected.

3.2 FASTENERS

A. Secure units to supports
B. Place fasteners as indicated in manufacturer's standards.

3.3 INSTALLATION

A. Panels shall be installed plumb and true in a proper alignment and in relation to the structural framing. The erector must have at least five years successful experience with similar applications.
B. Install metal panels, fasteners, trim and related sealants in accordance with approved shop drawings and as may be required for a weather-tight installation.

C. Remove all strippable coating and provide a dry-wipe down cleaning of the panels as they are erected.

3.4 DAMAGED MATERIAL

A. Upon determination of responsibility, repair or replace damaged metal panels and trim to the satisfaction of the Architect and Owner.

END OF

THIS PAGE LEFT INTENTIONALLY BLANK

SECTION 074101

PREFORMED METAL WALL AND SOFFIT PANELS

PART 1 - GENERAL

1.1 DESCRIPTION OF WORK

A. This section covers the pre-finished, pre-fabricated Architectural metal wall panel system. All metal trim, accessories, fasteners, insulation and sealants indicated on the drawings as part of this section.
B. Drawings and general provisions of the Contract, including general and Supplementary Conditions and Division 01 Specifications, apply to this section.

1.2 SUMMARY

A. Section Includes
    1. Factory formed metal wall panels
B. Related work specified elsewhere (Note: select from the below or add appropriate sections)
    1. Metal Roof Deck: Division 5 - Metal Deck Sections
    2. Wood Framing and Decking: Division 6 Roof Carpentry Section
    3. Flashing and Trim: Division 7- Flashing and Sheet Metal
    4. Coping and Gravel Stops: Division 7 Roof Specialties and Accessories
    5. Sealants: Division 7 Joint Sealers Sections

1.3 Definitions

A. Metal Wall Panel Assembly: Metal wall panels, attachment system components, miscellaneous metal framing, thermal, and accessories necessary for a complete weathertight system.

1.4 QUALITY ASSURANCE

A. Petersen Aluminum Corp, Acworth, GA, 800-272-4482Petersen Aluminum Corp, Phoenix, AZ, 833-750-1935 products establish a minimum of quality required.
B. Manufacturer and erector shall demonstrate experience of a minimum of five (5) years in this type of project.
C. Sheet Metal Industry Standard: Comply with Sheet Metal and Air Conditioning Contractors National Association (SMACNA) *Architectural Sheet Metal Manual.*
D. Panels shall be factory-produced only. No portable, installer-owned or installer-rented machines will be permitted.

1.5 SUBSTITUTIONS

A. The material, products and equipment specified in this section establish a standard for required function, dimension, appearance and quality to be met by any proposed substitution.

1.6 SYSTEM DESCRIPTION

A. Material to comply with:
   1. ASTM B209 Standard Specification for Aluminum and Aluminum-Alloy Sheet and Plate

1.7 WALL PANEL SYSTEM PERFORMANCE TESTING

A. General Performance: Metal wall panels shall comply with performance requirements without failure due to defective manufacture, fabrication, installation or other defects in construction.
B. Panels to meet:
   1. Metal Wall or Metal Soffit System shall be designed to meet applicable Local Building Code and the Soffit System shall have been tested by the Manufacturer per ASTM E-330 and have the applicable Load Tables published from this Air Bag testing for negative loads.

1.8 WARRANTIES

A. Finish warranty: Manufacturer's standard form in which manufacturer agrees to repair finish or replace metal wall panels that show evidence of deterioration of factory-applied finish within specified warranty period.
   1. Exposed Panels Finish - deterioration includes the following:
      a. Color fading more than 5 hunter units when tested according to ASTM D 2244
      b. Chalking in excess of a No. 8 rating when tested according to ASTM D 4214
      c. Cracking, checking, peeling or failure of a paint to adhere to a bare metal.
   2. Warranty Period: 20 Years from the date of substantial completion
B. Applicator shall furnish written warranty for a two (2) year period from date of substantial completion of building covering repairs required to maintain roof and flashings in watertight condition

1.9 SUBMITTALS

A. Furnish detailed drawings showing profile and gauge of exterior sheets, location and type of fasteners, location, gauges, shape and method of attachment of all trim locations and types of sealants, and any other details as may be required for a weather-tight installation.
B. Provide finish samples of all colors specified.
C. Shop drawings: Show fabrication and installation layouts of metal wall panels or metal soffit panels, details of edge conditions, panel profiles, corners, anchorages, trim,

flashings, closures and accessories, and special details. Distinguish between factory and field-assembled work

D. Coordination Drawings: Plans, drawn to scale, on which the following are shown and coordinated with each other, based on input from installer of the items involved.
E. LEED Submittals
    1. Product data for Credit MR 4.1 and credit MR 4.2: Indicating the percentages by weight of postconsumer and preconsumer recycled content for products having recycled content.

1.10 DELIVERY, STORAGE AND HANDLING

A. Ordering: Comply with manufacturer's ordering instruction and lead time requirements to avoid construction delays.
B. Deliver components, sheets, metal wall panels and other manufactured items so as not to be damaged or deformed. Package metal wall panels for protection during transportation and handling.
C. Unload, store and erect metal wall panels in a manner to prevent bending, warping, twisting and surface damage.
D. Stack metal wall panels on platforms or pallets, covered with suitable weathertight and ventilated covering. Store metal wall panels to ensure dryness. Do not store metal wall panels in contact with other materials that might cause staining, denting or other surface damage.
E. Protect strippable protective coating on any metal coated product from exposure to sunlight and high humidity, except to the extent necessary for material installation.

1.11 PROJECT CONDITIONS

A. Weather Limitations: proceed with installation only when existing and forecasted weather conditions permit metal wall panel work to be performed.
B. Field Measurements: Verify actual dimensions of construction contiguous with metal roof panels by field measurements before fabrication.

PART 2 - PRODUCTS

2.1 PANEL DESIGN

A. General: Provide factory-formed metal wall panels designed for wall, soffit and fascia applications where a flush or flat appearance is desired. A round interlock leg and concealed fastening system act to improve the flush appearance while providing additional strength.
B. Wall panels shall be Flush Wall 12" widths with 1" height.
C. Panels to be produced Smooth - Factory Standard. Specifier note: Factory standard is smooth unless specified. Specifier Note: Depending on producing factory, panels may be

specified with venting strips or perforated, aluminum panels only, for soffit applications. Check with local factory for capabilities.

D. Forming: Use continuous end rolling method. No end laps on panels. No portable rollforming machines will be permitted on this project, no installer-owned or installer-rented machines will be permitted. It is the intent of the Architect to provide Factory-Manufactured panel systems only for this project.

2.2 ACCEPTABLE MANUFACTURERS

A. This project is detailed around the metal wall product of Petersen Aluminum Corp, Acworth, GA, 800-272-4482Petersen Aluminum Corp, Phoenix, AZ, 833-750-1935 Flush Wall

2.3 MATERIALS AND FINISHES

A. Preformed metal panels shall be fabricated of .040 Aluminum and shall be Herr-Voss corrective leveled for flat appearance.
B. Color shall be Bone White
C. Finish shall be Kynar 500 or Hylar 5000 Fluorocarbon coating with a top side film thickness of 0.70 to 0.90 mil over a 0.25 to 0.3 mil prime coat to provide a total dry film thickness of 0.95 to 1.25 mil, to meet AAMA 621. Bottom side shall be coated with a primer with a dry film thickness of 0.25 mil. Finish shall conform to all tests for adhesions, flexibility and longevity as specified by Kynar 500 or Hylar 5000 finish supplier.
D. If Strippable coating to be applied on the pre-finished panels to the top side to protect the finish during fabrication, shipping and handling, film shall be removed before installation.
E. Trim: Trim shall be fabricated of the same material and finish to match the profile, and will be press broken in lengths of 10 to 12 feet. Trim shall be formed only by the manufacturer of their approved dealer. Trim to be erected in overlapped condition. Use lap strips only as indicated on drawings. Miter conditions shall be factory welded material to match the sheeting.
F. Accessories/Fasteners: Fasteners shall be of type, material, size, corrosion resistance, holding power and other properties required to fasten miscellaneous framing members to substrates. Accessories and their fasteners shall be capable of resisting the specified design wind uplift forces and shall allow for thermal movement of the wall panel system. Exposed fasteners shall not restrict free movement of the roof panel system resulting from thermal forces, except at designed points of roof panel fixity
G. Substrate shall be Nailbase
H. Underlayment
    1. 1. On all surfaces to be covered with metal wall panels, furnish and install a 40 mil "Peel & Stick membrane", required as outlined by metal panel manufacturer. Membrane to be a minimum of 40 mil thickness, smooth, non-granular, by one of the following manufacturers:
        a. W.R Grace "Ice & Water Shield"
        b. Cetco Strongseal

c. Carlisle CCW WIP 300HT
d. Interwrap Titanium PSU
e. MFM Corp "Wind & Water Shield"
f. Polyguard Deck Guard HT of Polyglas HT
g. Tamko TW Tile and Metal Underlayment

I. Sealants
1. Provide two-part polysulfide class B non-sag type for vertical and horizontal joints or
2. One part polysulfide not containing pitch or phenolic extenders or
3. Exterior grade silicone sealant recommended by roofing manufacturer or
4. One part non-sag, gun grade exterior type polyurethane recommended by the roofing manufacturer.

2.4 FABRICATION

A. Comply with dimensions, profile limitations, gauges and fabrication details shown and if not shown, provide manufacturerâ€™s standard product fabrication.
1. Max panel length is 55'.
B. Fabricate components of the system in factory, ready for field assembly.
C. Fabricate components and assemble units to comply with fire performance requirements specified.
D. Apply specified finishes in conformance with manufacturerâ€™s standard, and according to manufacturerâ€™s instructions.

PART 3 - EXECUTION

3.1 INSPECTION

A. Examine alignment of structural steel and related supports, primary and secondary roof framing, solid roof sheathing, prior to installation.
B. For the record, prepare written report, endorsed by installer, listing conditions detrimental to performance of the Work.
C. Proceed with installation only after unsatisfactory conditions have been corrected.

3.2 FASTENERS

A. Secure units to supports.
B. Place fasteners as indicated in manufacturer's standards.

3.3 INSTALLATION

A. Compliance: Comply with manufacturerâ€™s product data, recommendations and installation instructions for substrate verification, preparation requirements and installation.

B. Panels shall be installed plumb and true in a proper alignment and in relation to the structural framing. The erector must have at least five years successful experience with similar applications.
C. Install metal panels, fasteners, trim and related sealants in accordance with approved shop drawings and as may be required for a weather-tight installation.
D. Provide uniform, neat seams.
E. Fasteners: Conceal fasteners where possible in exposed work. Cover and seal fasteners and anchors for watertight and leakproof installation.
F. Remove all strippable coating and provide a dry-wipe down cleaning of the panels as they are erected.

3.4 DAMAGED MATERIAL

A. Upon determination of responsibility, repair or replace damaged metal panels and trim to the satisfaction of the Architect and Owner.

3.5 CLEANING

A. Cleaning: Remove temporary coverings and protection of adjacent work areas. Repair or replace damage installed products. Clean installed products in accordance with manufacturer's instruction prior to owner's acceptance. Remove construction debris from project site and legally dispose of debris.

END OF SECTION

SECTION 07 62 00 - SHEET METAL FLASHING AND TRIM, AND GUTTERS, DOWNSPOUTS AND SCUPPERS

PART 1 - GENERAL

1.1 SUMMARY

A. This Section includes the following:
   1. Manufactured reglets.
   2. Formed roof drainage system.
   3. Formed roof flashing and trim.
   4. Gutters, downspouts and scuppers

1.2 PERFORMANCE REQUIREMENTS

A. General: Sheet metal flashing and trim assemblies as specified in this and other sections, shall withstand wind loads, structural movement, thermally induced movement, and exposure to weather without failure due to defective manufacture, fabrication, installation or other defects in construction. Completed sheet metal flashing and trim shall not rattle, leak or loosen and shall remain watertight.

1.3 SUBMITTALS

A. Product Data: For each product indicated.
B. Shop Drawings: Show layouts, profiles, shapes, seams, dimensions, and details for fastening, joining, supporting, and anchoring sheet metal flashing and trim. Submittal shall include verification of downspout sizes with drainage calculations.
C. Samples: For each type of sheet metal flashing and trim.
D. Provide manufacturer’s documentation indicating separate percentages, by weight, of post-consumer and pre-consumer recycled content. Also include material costs, excluding cost of installation.
E. Provide manufacturer’s documentation indicating location of manufacturing facility and location where the base materials were extracted, mined, quarried, harvested, etc. Include address and distance to the project site for both manufacture and harvest. Also include material costs, excluding cost of installation.

1.4 QUALITY ASSURANCE

A. Sheet Metal Flashing and Trim Standard: Comply with SMACNA's "Architectural Sheet Metal Manual." Conform to dimensions and profiles shown unless more stringent requirements are indicated.
B. Mockups: Build mockups to demonstrate aesthetic effects and set quality standards for fabrication and installation.
   1. Approved mockups may become part of the completed Work if undisturbed at time of Substantial Completion.
C. Pre-installation Conference: Conduct conference at Project site.

PART 2 - PRODUCTS

2.1 SHEET METALS

A. Aluminum Sheet: ASTM B 209 (ASTM B 209M), Alloy 3003, 3004, 3105, or 5005, Temper suitable for forming and structural performance required, but not less than H14, finished as follows:
   1. High-Performance Organic Finish: Three-coat, thermocured system containing not less than 70 percent polyvinylidene fluoride resin by weight; complying with AAMA 2605.
      a. Color: As selected by Architect from manufacturer's full range.
   2. Provide Pretreatment: All aluminum shall be pretreated and dipped prior to the Kynar finish.

B. Stainless-Steel Sheet: ASTM A 240/A 240M, Type 304, No. 4 finish.

2.2 MISCELLANEOUS MATERIALS

A. General: Provide materials and types of fasteners, solder, welding rods, protective coatings, separators, sealants, and other miscellaneous items as required for complete sheet metal flashing and trim installation.
B. Felt Underlayment: ASTM D 226, Type II (No. 30), asphalt-saturated organic felt, non-perforated.
   1. Slip Sheet: Rosin-sized paper, minimum 3 lb/100 sq. ft. (0.16 kg/sq. m).
C. Fasteners: Wood screws, annular threaded nails, self-tapping screws, self-locking rivets and bolts, and other suitable fasteners designed to withstand design loads.
   1. Exposed Fasteners: Heads matching color of sheet metal by means of plastic caps or factory-applied coating.
   2. Fasteners for Flashing and Trim: Blind fasteners or self-drilling screws, gasketed, with hex washer head.
   3. Blind Fasteners: High-strength stainless-steel rivets.
D. Sealing Tape: Pressure-sensitive, 100 percent solids, polyisobutylene compound sealing tape with release-paper backing. Provide permanently elastic, nonsag, nontoxic, nonstaining tape.
E. Elastomeric Sealant: ASTM C 920, elastomeric polyurethane polymer sealant; of type, grade, class, and use classifications required to seal joints in sheet metal flashing and trim and remain watertight.
F. Butyl Sealant: ASTM C 1311, single-component, solvent-release butyl rubber sealant, polyisobutylene plasticized, heavy bodied for hooked-type expansion joints with limited movement.
G. Epoxy Seam Sealer: Two-part, noncorrosive, aluminum seam-cementing compound.
H. Bituminous Coating: Cold-applied asphalt mastic, SSPC-Paint 12, compounded for 15-mil (0.4-mm) dry film thickness per coat.

2.3 REGLETS

A. Reglets: Units of type, material, and profile indicated, formed to provide secure interlocking of separate reglet and counterflashing pieces, and compatible with flashing indicated with factory- mitered and -welded corners and junctions.
   1. General: Reglets shall be compatible with counterflashing and roofing material.
   2. Manufacturers:
      a. Fry Reglet Corporation.
      b. Hickman, W. P. Company.
      c. O' Keefe's Inc.
   3. Material:
      a. Stainless steel, Type 304, 0.020 inch thick
   4. Type:
      a. Concrete: Manufactured channel with temporary closure tape to keep reglet free of concrete materials, fasteners for attaching reglet to concrete forms, and guides to ensure alignment of reglet section ends.
         1) Product: CW (O'Keefe Inc); CO (Fry Reglet Corp.)
      b. Masonry: Manufactured reglet with offset top flange for embedment in masonry mortar joint.
         1) Product: MI (O'Keefe Inc); MA (Fry Reglet Corp.)
      c. Stucco/Siding: Manufactured reglet installed prior to lathing. Use wind clips as required to comply with the Florida Building Code.
         1) Product: SS (O'Keefe Inc); ST or STX (Fry Reglet Corp.)
      d. Surface Mounted: Manufactured surface applied reglet with slotted holes for fastening to substrate, with neoprene or other suitable weatherproofing washers, and with channel for sealant at top edge.
         1) Product: EN (O'Keefe Inc); SM (Fry Reglet Corp.)

2.4 FABRICATION, GENERAL

A. General: Custom fabricate sheet metal flashing and trim to comply with recommendations in SMACNA's "Architectural Sheet Metal Manual" that apply to design, dimensions, metal, and other characteristics of item indicated. Shop fabricate items where practicable. Obtain field measurements for accurate fit before shop fabrication.

B. Fabricate sheet metal flashing and trim without excessive oil canning, buckling, and tool marks and true to line and levels indicated, with exposed edges folded back to form hems.
   1. Seams for Aluminum: Fabricate nonmoving seams with flat-lock seams. Form seams and seal with epoxy seam sealer. Rivet joints for additional strength.
   2. Seams for Other Than Aluminum: Fabricate nonmoving seams in accessories with flat-lock seams. Tin edges to be seamed, form seams, and solder.

C. Sealed Joints: Form non-expansion but movable joints in metal to accommodate elastomeric sealant to comply with SMACNA recommendations.

D. Expansion Provisions: Where lapped or bayonet-type expansion provisions in the Work cannot be used, form expansion joints of intermeshing hooked flanges, not less than 1 inch (25 mm) deep, filled with elastomeric sealant concealed within joints.

E. Conceal fasteners and expansion provisions where possible on exposed-to-view sheet metal flashing and trim, unless otherwise indicated.

F. Fabricate cleats and attachment devices from same material as accessory being anchored or from compatible, noncorrosive metal, and in thickness not less than that of metal being secured.

2.5 ROOF DRAINAGE SHEET METAL FABRICATIONS

A. Hanging Gutters: Fabricate to cross section indicated, complete with end pieces, outlet tubes, and other accessories as required. Fabricate in minimum 96-inch- (2400-mm-) long sections. Furnish flat-stock gutter spacers and gutter brackets fabricated from same metal as gutters, of size recommended by SMACNA but not less than twice the gutter thickness. Fabricate expansion joints, expansion-joint covers, gutter bead reinforcing bars, and gutter accessories from same metal as gutters.
   1. Accessories: Wire ball downspout strainer.
   2. Fabricate from the following material:
      a. Aluminum: Minimum 0.040 inch (1.0 mm) thick.

B. Downspouts: Fabricate round downspouts complete with mitered elbows. Furnish with metal hangers, from same material as downspouts, and anchors.
   1. Fabricate downspouts from the following material:
      a. Aluminum: Minimum 0.024 inch (0.6 mm) thick.

C. Scuppers: Fabricate scuppers to the dimensions shown
   1. - Fabricate scuppers from the following material:
      a. Aluminum: Minimum 0.024 inch (0.6 mm) thick.

2.6 ROOF SHEET METAL FABRICATIONS

A. Base and Step Flashing: Fabricate from the following material:
   1. Aluminum: Minimum 0.040 inch (1.0 mm) thick.

B. Counterflashing and Flashing Receivers: Fabricate from the following material:
   1. Aluminum: Minimum 0.0320 inch (0.8 mm) thick.

C. Drip Edges: Fabricate from the following material:
   1. Aluminum: Minimum 0.0320 inch (0.8 mm) thick.

2.7 WALL SHEET METAL FABRICATIONS

A. Through-Wall Flashing: Fabricate continuous flashings in minimum 96-inch- (2400-mm-) long, but not exceeding 12-foot- (3.6-m-) long, sections, under copings, at shelf angles, and where indicated. Fabricate discontinuous lintel, sill, and similar flashings to extend 6 inches (150 mm) beyond each side of wall openings. Form with 2-inch- (50-mm-) high, end dams where flashing is discontinuous. Fabricate from the following materials:
   1. Stainless Steel: 0.016 inch (0.40 mm) thick.

B. Opening Flashings in Wall Construction: Fabricate head, sill, and similar flashings to extend 4 inches (100 mm) beyond wall openings. Form head and sill flashing with 2-inch- (50-mm-) high, end dams. Fabricate from the following materials:
   1. Stainless Steel: 0.016 inch (0.40 mm) thick.

PART 3 - EXECUTION

3.1 INSTALLATION, GENERAL

A. General: Anchor sheet metal flashing and trim and other components of the Work securely in place, with provisions for thermal and structural movement. Use fasteners, solder, welding rods, protective coatings, separators, sealants, and other miscellaneous items as required to complete sheet metal flashing and trim system.
   1. Torch cutting of sheet metal flashing and trim is not permitted.

B. Metal Protection: Where dissimilar metals will contact each other or corrosive substrates, protect against galvanic action by painting contact surfaces with bituminous coating or by other permanent separation as recommended by fabricator or manufacturers of dissimilar metals.

C. Install exposed sheet metal flashing and trim without excessive oil canning, buckling, and tool marks.

D. Install sheet metal flashing and trim true to line and levels indicated. Provide uniform, neat seams with minimum exposure of solder, welds, and elastomeric sealant.

E. Install sheet metal flashing and trim to fit substrates and to result in watertight performance. Verify shapes and dimensions of surfaces to be covered before fabricating sheet metal.
   1. Space cleats not more than 12 inches (300 mm) apart. Anchor each cleat with two fasteners. Bend tabs over fasteners.

F. Expansion Provisions: Provide for thermal expansion of exposed flashing and trim. Space movement joints at a maximum of 10 feet (3 m) with no joints allowed within 24 inches (600 mm) of corner or intersection. Where lapped or bayonet-type expansion provisions cannot be used or would not be sufficiently watertight, form expansion joints of intermeshing hooked flanges, not less than 1 inch (25 mm) deep, filled with elastomeric sealant concealed within joints.

G. Fasteners: Use stainless steel fasteners of sizes that will penetrate substrate not less than 1-1/4 inches (32 mm) for nails and not less than 3/4 inch (19 mm) for screws.

H. Seal joints as shown and as required for watertight construction.
   1. Where sealant-filled joints are used, embed hooked flanges of joint members not less than 1 inch (25 mm) into sealant. Form joints to completely conceal sealant. When ambient temperature at time of installation is moderate, between 40 and 70 deg F (4 and 21 deg C), set joint members for 50 percent movement each way. Adjust setting proportionately for installation at higher ambient temperatures. Do not install sealant-type joints at temperatures below 40 deg F (4 deg C).
   2. Prepare joints and apply sealants to comply with requirements in Division 07 Section "Joint Sealants."

I. Soldered Joints: Clean surfaces to be soldered, removing oils and foreign matter. Pretin edges of sheets to be soldered to a width of 1-1/2 inches (38 mm) except where pretinned surface would show in finished Work.
   1. Do not solder aluminum sheet.

3.2 ROOF DRAINAGE SYSTEM INSTALLATION

A. General: Install sheet metal roof drainage items to produce complete roof drainage system according to SMACNA recommendations and as indicated. Coordinate installation of roof perimeter flashing with installation of roof drainage system.

B. Hanging Gutters: Join sections with riveted and soldered joints or with lapped joints sealed with elastomeric sealant. Provide for thermal expansion. Attach gutters at eave or fascia to firmly anchored gutter brackets and straps spaced not more than 36 inches (900 mm) apart. Provide end closures and seal watertight with sealant. Slope to downspouts.
   1. Install gutter with expansion joints at locations indicated but not exceeding 50 feet (15.24 m) apart. Install expansion joint caps.
   2. Slope gutters not less than 1/8-inch per foot.

C. Downspouts: Join sections with 1-1/2-inch (38-mm) telescoping joints. Provide fasteners designed to hold downspouts securely 1 inch (25 mm) away from walls; locate fasteners at top and bottom and at approximately 60 inches (1500 mm) o.c. in between.

D. Splash Pans: Install concrete splash pans at every downspout where not connected to underground drainage collection system.

3.3 ROOF FLASHING INSTALLATION

A. General: Install sheet metal roof flashing and trim to comply with performance requirements and SMACNA's "Architectural Sheet Metal Manual." Provide concealed fasteners where possible, set units true to line, and level as indicated. Install work with laps, joints, and seams that will be permanently watertight.

B. Roof Edge Flashing: Anchor to resist uplift and outward forces according to recommendations in FMG Loss Prevention Data Sheet 1-49.
   1. Interlock bottom edge of roof edge flashing with continuous cleats anchored to substrate at spacing required to accommodate wind speeds and the Florida Building Code.

C. Copings: Refer to Division 07 Section “Roof Specialties.”

D. Counterflashing: Coordinate installation of counterflashing with installation of base flashing. Insert counterflashing in reglets or receivers and fit tightly to base flashing. Secure in a waterproof manner. Extend counterflashing 4 inches (100 mm) over base flashing. Lap counterflashing joints a minimum of 4 inches (100 mm) and bed with elastomeric sealant.

E. Metal Base Flashing: Locate over membrane base flashing and secure with continuous cleat form compression seal. Fasten cleat at maximum 4 inches on center. Extend bottom flange of metal base flashing over roofing assembly and hold in place with insulation. Fill top well of cleat serving as metal base flashing termination bar with joint sealant.

F. Roof-Penetration Flashing: Coordinate installation of roof-penetration flashing with installation of roofing and other items penetrating roof. Install flashing as required to provide weather and watertight roof assembly. All piping penetrations shall be painted to match roofing.

G. Reglets: Shall be fasten, a maximum of 12-inches o.c., unless otherwise recommended per manufacturers written instructions.
   1. Insert counterflashing into reglet to form tight fit. Secure in place with wedges at maximum of 12-inches o.c. Seal flashing into reglets with sealant.

END OF SECTION 07 62 00

This Page Intentionally Left Blank

SECTION 07 71 00 - ROOF SPECIALTIES

PART 1 - GENERAL

PART 2 - SUMMARY

A. Section Includes:

1. Copings.
2. Roof-edge flashings.

2.2 PERFORMANCE REQUIREMENTS

A. Provide engineered copings and fascias capable of withstanding wind uplift resistant, windborne debris, basic wind speed and The Florida Building Code. All materials required to comply shall be in accordance with the Florida Product Approval System, Rule 9B-72 of the Florida Building Code.

B. SPRI Wind Design Standard: Manufacture and install copings and roof-edge flashings tested according to SPRI ES-1 and capable of resisting the following design pressures:

1. Wind Speed: Refer to the structural drawings

2.3 SUBMITTALS

A. Product Data: For each type of product indicated.

B. Shop Drawings: For roof specialties. Include plans, elevations, expansion-joint locations, keyed details, and attachments to other work. Distinguish between plant- and field-assembled work.

C. Samples: For each exposed product and for each color and texture specified.

D. Product test reports. Provide documentation that the products have been tested to withstand the design pressures.

E. Maintenance data.

F. Warranty: Sample of special warranty.

2.4 WARRANTY

A. Special Warranty on Painted Finishes: Manufacturer's standard form in which manufacturer agrees to repair finish or replace roof specialties that show evidence of deterioration of factory-applied finishes within 20 years from date of Substantial Completion.

PART 3 - PRODUCTS

3.1 EXPOSED METALS

A. Aluminum Sheet: ASTM B 209 (ASTM B 209M), alloy as standard with manufacturer for finish required, with temper to suit forming operations and performance required.

1. Surface: Smooth, flat finish.
2. Exposed Coil-Coated Finishes: Prepare, pretreat, and apply coating to exposed metal surfaces to comply with coating and resin manufacturers' written instructions.

a. Two-Coat Fluoropolymer: AAMA 620. System consisting of primer and fluoropolymer color topcoat containing not less than 70 percent PVDF resin by weight.

3.2 CONCEALED METALS

A. Stainless-Steel Sheet: ASTM A 240/A 240M or ASTM A 666, Type 304.

3.3 UNDERLAYMENT MATERIALS

A. Self-Adhering, High-Temperature Sheet: Minimum 30 to 40 mils (0.76 to 1.0 mm) thick, consisting of slip-resisting polyethylene-film top surface laminated to layer of butyl or SBS-modified asphalt adhesive, with release-paper backing; cold applied. Provide primer when recommended by underlayment manufacturer.

1. Thermal Stability: ASTM D 1970; stable after testing at 240 deg F (116 deg C).
2. Low-Temperature Flexibility: ASTM D 1970; passes after testing at minus 20 deg F (29 deg C).

3.4 MISCELLANEOUS MATERIALS

A. General: Provide materials and types of fasteners, protective coatings, sealants, and other miscellaneous items required by manufacturer for a complete installation.

B. Fasteners: Manufacturer's recommended fasteners, suitable for application and designed to meet performance requirements. Furnish the following unless otherwise indicated:
1. Fasteners for Stainless-Steel Sheet: Series 300 stainless steel.

C. Elastomeric Sealant: ASTM C 920, elastomeric polymer sealant of type, grade, class, and use classifications required by roofing-specialty manufacturer for each application.

3.5 COPINGS

A. Copings: Manufactured coping system consisting of formed-metal coping cap in section lengths not exceeding 12 feet (3.6 m), concealed anchorage; corner units, end cap units, and concealed splice plates with same finish as coping caps.
1. Basis-of-Design Product: Subject to compliance with requirements, provide Hickman Company, W. P.; Permasnap Plus Parapet Wall Coping or comparable product by one of the following:
a. Cheney Flashing Company.
b. Merchant & Evans, Inc.

c. Metal-Era, Inc.

B. Aluminum Sheet: ASTM B 209 (ASTM B 209M), alloy as standard with manufacturer for finish required, with temper to suit forming operations and performance required.

1. Surface: Smooth, flat finish.
2. Exposed Coil-Coated Finishes: Prepare, pretreat, and apply coating to exposed metal surfaces to comply with coating and resin manufacturers' written instructions.

a. Two-Coat Fluoropolymer: AAMA 620. System consisting of primer and fluoropolymer color topcoat containing not less than 70 percent PVDF resin by weight.

3. Corners: Factory mitered and continuously welded.
4. Coping-Cap Attachment Method: Snap-on, fabricated from coping-cap material.
5. Snap-on-Coping Anchor Plates: Concealed, stainless steel sheet, 12 inches (300 mm) wide, with integral cleats.
6. Face Leg Cleats: Concealed, continuous stainless steel.

3.6 EMERGENCY OVERFLOW SCUPPERS

A. Parapet Scuppers: Manufactured with closure flange trim to exterior, 4-inch- (100-mm-) wide wall flanges to interior, and base extending 4 inches (100 mm) beyond cant or tapered strip into field of roof.

1. Fabricate from the following exposed metal:
a. Stainless Steel: **0.019 inch (0.48 mm)** thick.

PART 4 - EXECUTION

4.1 INSTALLATION, GENERAL

A. General: Install roof specialties according to manufacturer's written instructions. Anchor roof specialties securely in place, with provisions for thermal and structural movement. Use fasteners, solder, protective coatings, separators, sealants, and other miscellaneous items as required to complete roof-specialty systems.

1. Install roof specialties level, plumb, true to line and elevation; with limited oil-canning and without warping, jogs in alignment, buckling, or tool marks.
2. Provide uniform, neat seams with minimum exposure of solder and sealant.
3. Install roof specialties to fit substrates and to result in watertight performance. Verify shapes and dimensions of surfaces to be covered before manufacture.
4. Torch cutting of roof specialties is not permitted.
5. Install underlayment with adhesive for temporary anchorage. Apply in shingle fashion to shed water, with lapped joints of not less than 2 inches (50 mm).[Roll laps of self-adhering sheet underlayment with roller; cover within 14 days.]

B. Expansion Provisions: Allow for thermal expansion of exposed roof specialties.

1. Space movement joints at a maximum of 12 feet (3.6 m) with no joints within 18 inches (450 mm) of corners or intersections unless otherwise shown on Drawings.
2. When ambient temperature at time of installation is between 40 and 70 deg F (4 and 21 deg C), set joint members for 50 percent movement each way. Adjust setting proportionately for installation at higher ambient temperatures.

C. Fastener Sizes: Use fasteners of sizes that will penetrate wood blocking substrate not less than recommended by fastener manufacturer to achieve maximum pull-out resistance.

D. Seal joints with sealant as required by roofing-specialty manufacturer.

E. Seal joints as required for watertight construction. Place sealant to be completely concealed in joint. Do not install sealants at temperatures below 40 deg F (4 deg C).

4.2 COPING INSTALLATION

A. Install cleats, anchor plates, and other anchoring and attachment accessories and devices with concealed fasteners.

B. Anchor copings to meet performance requirements.

1. Interlock face and back leg drip edges of snap-on coping cap into cleated anchor plates anchored to substrate at manufacturer's required spacing that meets performance requirements.

4.3 CLEANING AND PROTECTION

A. Remove temporary protective coverings and strippable films as roof specialties are installed.

END OF SECTION 07 71 00

SECTION 078413 - PENETRATION FIRESTOPPING

PART 1 - GENERAL

1.1 RELATED DOCUMENTS

A. Drawings and general provisions of the Contract, including General and Supplementary Conditions and Division 01 Specification Sections, apply to this Section.

1.2 SUMMARY

A. Section Includes:

1. Penetrations in fire-resistance-rated walls.
2. Penetrations in horizontal assemblies.
3. Penetrations in smoke barriers.

1.3 ACTION SUBMITTALS

A. Product Data: For each type of product.

1.4 CLOSEOUT SUBMITTALS

A. Installer Certificates: From Installer indicating that penetration firestopping systems have been installed in compliance with requirements and manufacturer's written instructions.

1.5 PROJECT CONDITIONS

A. Environmental Limitations: Do not install penetration firestopping system when ambient or substrate temperatures are outside limits permitted by penetration firestopping system manufacturers or when substrates are wet because of rain, frost, condensation, or other causes.

B. Install and cure penetration firestopping materials per manufacturer's written instructions using natural means of ventilations or, where this is inadequate, forced-air circulation.

1.6 COORDINATION

A. Coordinate construction of openings and penetrating items to ensure that penetration firestopping systems can be installed according to specified firestopping system design.

B. Coordinate sizing of sleeves, openings, core-drilled holes, or cut openings to accommodate penetration firestopping systems.

PART 2 - PRODUCTS

2.1 PERFORMANCE REQUIREMENTS

A. Fire-Test-Response Characteristics:

1. Perform penetration firestopping system tests by a qualified testing agency acceptable to authorities having jurisdiction.
2. Test per testing standards referenced in "Penetration Firestopping Systems" Article. Provide rated systems complying with the following requirements:

a. Penetration firestopping systems shall bear classification marking of a qualified testing agency.

1) UL in its "Fire Resistance Directory."

2.2 PENETRATION FIRESTOPPING SYSTEMS

A. Penetration Firestopping Systems: Systems that resist spread of fire, passage of smoke and other gases, and maintain original fire-resistance rating of construction penetrated. Penetration firestopping systems shall be compatible with one another, with the substrates forming openings, and with penetrating items if any.

B. Penetrations in Fire-Resistance-Rated Walls: Penetration firestopping systems with ratings determined per ASTM E814 or UL 1479, based on testing at a positive pressure differential of 0.01-inch wg (2.49 Pa).

1. F-Rating: Not less than the fire-resistance rating of constructions penetrated.

C. Penetrations in Horizontal Assemblies: Penetration firestopping systems with ratings determined per ASTM E814 or UL 1479, based on testing at a positive pressure differential of 0.01-inch wg (2.49 Pa).

1. F-Rating: At least one hour, but not less than the fire-resistance rating of constructions penetrated.
2. T-Rating: At least one hour, but not less than the fire-resistance rating of constructions penetrated except for floor penetrations within the cavity of a wall.

D. Penetrations in Smoke Barriers: Penetration firestopping systems with ratings determined per UL 1479, based on testing at a positive pressure differential of 0.30-inch wg (74.7 Pa).

E. Exposed Penetration Firestopping Systems: Flame-spread and smoke-developed indexes of less than 25 and 450, respectively, per ASTM E84.

F. Accessories: Provide components for each penetration firestopping system that are needed to install fill materials and to maintain ratings required. Use only those components specified by penetration firestopping system manufacturer and approved by qualified testing and inspecting agency for conditions indicated.

1. Permanent forming/damming/backing materials.
2. Substrate primers.
3. Collars.
4. Steel sleeves.

2.3 FILL MATERIALS

A. Latex Sealants: Single-component latex formulations that do not re-emulsify after cure during exposure to moisture.

B. Intumescent Putties: Nonhardening, water-resistant, intumescent putties containing no solvents or inorganic fibers.

C. Intumescent Wrap Strips: Single-component intumescent elastomeric sheets with aluminum foil on one side.

D. Mortars: Prepackaged dry mixes consisting of a blend of inorganic binders, hydraulic cement, fillers and lightweight aggregate formulated for mixing with water at Project site to form a nonshrinking, homogeneous mortar.

E. Silicone Foams: Multicomponent, silicone-based liquid elastomers that, when mixed, expand and cure in place to produce a flexible, nonshrinking foam.

F. Silicone Sealants: Single-component, silicone-based, neutral-curing elastomeric sealants.

2.4 MIXING

A. Penetration Firestopping Materials: For those products requiring mixing before application, comply with penetration firestopping system manufacturer's written instructions for accurate proportioning of materials, water (if required), type of mixing equipment, selection of mixer speeds, mixing containers, mixing time, and other items or procedures needed to produce products of uniform quality with optimum performance characteristics for application indicated.

PART 3 - EXECUTION

3.1 EXAMINATION

A. Examine substrates and conditions, with Installer present, for compliance with requirements for opening configurations, penetrating items, substrates, and other conditions affecting performance of the Work.

B. Proceed with installation only after unsatisfactory conditions have been corrected.

3.2 PREPARATION

A. Surface Cleaning: Before installing penetration firestopping systems, clean out openings immediately to comply with manufacturer's written instructions and with the following requirements:

1. Remove from surfaces of opening substrates and from penetrating items foreign materials that could interfere with adhesion of penetration firestopping materials.
2. Clean opening substrates and penetrating items to produce clean, sound surfaces capable of developing optimum bond with penetration firestopping materials. Remove loose particles remaining from cleaning operation.
3. Remove laitance and form-release agents from concrete.

B. Prime substrates where recommended in writing by manufacturer using that manufacturer's recommended products and methods. Confine primers to areas of bond; do not allow spillage and migration onto exposed surfaces.

3.3 INSTALLATION

A. General: Install penetration firestopping systems to comply with manufacturer's written installation instructions and published drawings for products and applications.

B. Install forming materials and other accessories of types required to support fill materials during their application and in the position needed to produce cross-sectional shapes and depths required to achieve fire ratings.

1. After installing fill materials and allowing them to fully cure, remove combustible forming materials and other accessories not forming permanent components of firestopping.

C. Install fill materials by proven techniques to produce the following results:

1. Fill voids and cavities formed by openings, forming materials, accessories and penetrating items to achieve required fire-resistance ratings.
2. Apply materials so they contact and adhere to substrates formed by openings and penetrating items.
3. For fill materials that will remain exposed after completing the Work, finish to produce smooth, uniform surfaces that are flush with adjoining finishes.

3.4 IDENTIFICATION

A. Wall Identification: Permanently label walls containing penetration firestopping systems with the words "FIRE AND/OR SMOKE BARRIER - PROTECT ALL OPENINGS," using lettering not less than 3 inches (76 mm) high and with minimum 0.375-inch (9.5-mm) strokes.

1. Locate in accessible concealed floor, floor-ceiling, or attic space at 15 feet (4.57 m) from end of wall and at intervals not exceeding 30 feet (9.14 m).

3.5 CLEANING AND PROTECTION

A. Clean off excess fill materials adjacent to openings as the Work progresses by methods and with cleaning materials that are approved in writing by penetration firestopping system manufacturers and that do not damage materials in which openings occur.

B. Provide final protection and maintain conditions during and after installation that ensure that penetration firestopping systems are without damage or deterioration at time of Substantial Completion. If, despite such protection, damage or deterioration occurs, immediately cut out and remove damaged or deteriorated penetration firestopping material and install new materials to produce systems complying with specified requirements.

END OF SECTION 078413

THIS PAGE LEFT INTENTIONALLY BLANK

SECTION 07 92 00 - JOINT SEALANTS

PART 1 - GENERAL

1.1 RELATED DOCUMENTS

A. Drawings and general provisions of the Contract, including General and Supplementary Conditions and Division 01 Specification Sections, apply to this Section.

1.2 SUMMARY

A. Section Includes:

1. Silicone joint sealants.
2. Urethane joint sealants.
3. Polysulfide joint sealants.
4. Latex joint sealants.
5. Solvent-release-curing joint sealants.
6. Preformed joint sealants.
7. Acoustical joint sealants.

1.3 ACTION SUBMITTALS

A. Product Data: For each joint-sealant product indicated.

B. GREEN GLOBE Submittal:

1. Product Data: For sealants and sealant primers used inside the weatherproofing system, including printed statement of VOC content.

C. Samples for Initial Selection: Manufacturer's color charts consisting of strips of cured sealants showing the full range of colors available for each product exposed to view.

D. Samples for Verification: For each kind and color of joint sealant required, provide Samples with joint sealants in 1/2-inch- (13-mm-) wide joints formed between two 6-inch- (150-mm-) long strips of material matching the appearance of exposed surfaces adjacent to joint sealants.

E. Joint-Sealant Schedule: Include the following information:

1. Joint-sealant application, joint location, and designation.
2. Joint-sealant manufacturer and product name.
3. Joint-sealant formulation.
4. Joint-sealant color.

1.4 INFORMATIONAL SUBMITTALS

A. Qualification Data: For qualified Installer.

B. Product Certificates: For each kind of joint sealant and accessory, from manufacturer.

C. Sealant, Waterproofing, and Restoration Institute (SWRI) Validation Certificate: For each sealant specified to be validated by SWRI's Sealant Validation Program.

D. Product Test Reports: Based on evaluation of comprehensive tests performed by a qualified testing agency, indicating that sealants comply with requirements.

E. Field-Adhesion Test Reports: For each sealant application tested.

F. Warranties: Sample of special warranties.

1.5 QUALITY ASSURANCE

A. Installer Qualifications: Manufacturer's authorized representative who is trained and approved for installation of units required for this Project.

B. Source Limitations: Obtain each kind of joint sealant from single source from single manufacturer.

C. Mockups: Install sealant in mockups of assemblies specified in other Sections that are indicated to receive joint sealants specified in this Section. Use materials and installation methods specified in this Section.

1.6 PROJECT CONDITIONS

A. Do not proceed with installation of joint sealants under the following conditions:

1. When ambient and substrate temperature conditions are outside limits permitted by joint-sealant manufacturer or are below 40 deg F (5 deg C).
2. When joint substrates are wet.
3. Where joint widths are less than those allowed by joint-sealant manufacturer for applications indicated.
4. Where contaminants capable of interfering with adhesion have not yet been removed from joint substrates.

1.7 WARRANTY

A. Special Installer's Warranty: Manufacturer's standard form in which Installer agrees to repair or replace joint sealants that do not comply with performance and other requirements specified in this Section within specified warranty period.

1. Warranty Period: Two years from date of Substantial Completion.

PART 2 - PRODUCTS

2.1 MATERIALS, GENERAL

A. Compatibility: Provide joint sealants, backings, and other related materials that are compatible with one another and with joint substrates under conditions of service and application, as demonstrated by joint-sealant manufacturer, based on testing and field experience.

B. Liquid-Applied Joint Sealants: Comply with ASTM C 920 and other requirements indicated for each liquid-applied joint sealant specified, including those referencing ASTM C 920 classifications for type, grade, class, and uses related to exposure and joint substrates.

1. Suitability for Immersion in Liquids. Where sealants are indicated for Use for joints that will be continuously immersed in liquids, provide products that have undergone testing according to ASTM C 1247. Liquid used for testing sealants is deionized water, unless otherwise indicated.

C. Stain-Test-Response Characteristics: Where sealants are specified to be nonstaining to porous substrates, provide products that have undergone testing according to ASTM C 1248 and have not stained porous joint substrates indicated for Project.

D. Suitability for Contact with Food: Where sealants are indicated for joints that will come in repeated contact with food, provide products that comply with 21 CFR 177.2600.

E. Colors of Exposed Joint Sealants: As selected by Architect from manufacturer's full range.

2.2 SILICONE JOINT SEALANTS

A. Single-Component, Nonsag, Neutral-Curing Silicone Joint Sealant: ASTM C 920, Type S, Grade NS, Class 100/50, for Use NT.

1. Products: Subject to compliance with requirements, available products that may be incorporated into the Work include, but are not limited to, the following:

a. Dow Corning Corporation; 790 NS Parking Structure Sealant.
b. GE Advanced Materials - Silicones; SilPruf LM SCS2700.
c. May National Associates, Inc.; Bondaflex Sil 290 Bondaflex Sil 728 NS.
d. Pecora Corporation; 301 NS 311 NS 890 890FTS.
e. Sika Corporation, Construction Products Division; SikaSil-C990.
f. Tremco Incorporated; Spectrem 1 Spectrem 800.

B. Single-Component, Nonsag, Neutral-Curing Silicone Joint Sealant: ASTM C 920, Type S, Grade NS, Class 50, for Use NT.

1. Products: Subject to compliance with requirements, available products that may be incorporated into the Work include, but are not limited to, the following:

a. BASF Building Systems; Omniseal 50.
b. Dow Corning Corporation; 756 SMS 791 795 995.

c. GE Advanced Materials - Silicones; SilGlaze II SCS2800 SilPruf NB SCS9000 SilPruf SCS2000 UltraPruf II SCS2900.
d. May National Associates, Inc.; Bondaflex Sil 295.
e. Pecora Corporation; 864 895 898.
f. Polymeric Systems, Inc.; PSI-641.
g. Sika Corporation, Construction Products Division; SikaSil-C995.
h. Tremco Incorporated; Spectrem 2 Spectrem 3.

C. Single-Component, Nonsag, Neutral-Curing Silicone Joint Sealant: ASTM C 920, Type S, Grade NS, Class 25, for Use NT.

1. Products: Subject to compliance with requirements, available products that may be incorporated into the Work include, but are not limited to, the following:

a. Dow Corning Corporation; 799.
b. GE Advanced Materials - Silicones; UltraGlaze SSG4000 UltraGlaze SSG4000AC.
c. May National Associates, Inc.; Bondaflex Sil 200 GPN Bondaflex Sil 201 FC.
d. Polymeric Systems, Inc.; PSI-631.
e. Schnee-Morehead, Inc.; SM5731 Poly-Glaze Plus.
f. Tremco Incorporated; Proglaze SSG Tremsil 600.

D. Single-Component, Nonsag, Acid-Curing Silicone Joint Sealant: ASTM C 920, Type S, Grade NS, Class 25, for Use NT.

1. Products: Subject to compliance with requirements, available products that may be incorporated into the Work include, but are not limited to, the following:

a. Bostik, Inc.; Chem-Calk 1200.
b. Dow Corning Corporation; 999-A.
c. GE Advanced Materials - Silicones; Contractors SCS1000 Construction SCS1200.
d. May National Associates, Inc.; Sil 100 GC Sil 100 GP Sil 100 WF.
e. Pecora Corporation; 860.
f. Polymeric Systems, Inc.; PSI-601.
g. Schnee-Morehead, Inc.; SM5732 Polyglaze.
h. Tremco Incorporated; Proglaze Tremsil 200.

E. Single-Component, Nonsag, Traffic-Grade, Neutral-Curing Silicone Joint Sealant: ASTM C 920, Type S, Grade NS, Class 100/50, for Use T.

1. Products: Subject to compliance with requirements, available products that may be incorporated into the Work include, but are not limited to, the following:

a. Dow Corning Corporation; 790 NS Parking Structure Sealant.
b. May National Associates, Inc.; Bondaflex Sil 728 NS.
c. Pecora Corporation; 301 NS 311 NS.
d. Tremco Incorporated; Spectrem 800.

F. Single-Component, Pourable, Traffic-Grade, Neutral-Curing Silicone Joint Sealant: ASTM C 920, Type S, Grade P, Class 100/50, for Use T.

1. Products: Subject to compliance with requirements, available products that may be incorporated into the Work include, but are not limited to, the following:

    a. Dow Corning Corporation; 890-SL SL Parking Structure Sealant.
    b. May National Associates, Inc.; Bondaflex Sil 728 SG Sil 728 SL.
    c. Pecora Corporation; 300 SL 310 SL.
    d. Tremco Incorporated; Spectrem 900 SL.

G. Multicomponent, Nonsag, Neutral-Curing Silicone Joint Sealant: ASTM C 920, Type M, Grade NS, Class 50, for Use NT.

1. Products: Subject to compliance with requirements, available products that may be incorporated into the Work include, but are not limited to, the following:

    a. Tremco Incorporated; Spectrem 4TS.

H. Multicomponent, Pourable, Traffic-Grade, Neutral-Curing Silicone Joint Sealant: ASTM C 920, Type M, Grade P, Class 100/50, for Use T.

1. Products: Subject to compliance with requirements, available products that may be incorporated into the Work include, but are not limited to, the following:

    a. Dow Corning Corporation; FC Parking Structure Sealant.
    b. May National Associates, Inc.; Bondaflex Sil 728 RCS.

I. Mildew-Resistant, Single-Component, Nonsag, Neutral-Curing Silicone Joint Sealant: ASTM C 920, Type S, Grade NS, Class 25, for Use NT.

1. Products: Subject to compliance with requirements, available products that may be incorporated into the Work include, but are not limited to, the following:

    a. Pecora Corporation; 898.

J. Mildew-Resistant, Single-Component, Acid-Curing Silicone Joint Sealant: ASTM C 920, Type S, Grade NS, Class 25, for Use NT.

1. Products: Subject to compliance with requirements, available products that may be incorporated into the Work include, but are not limited to, the following:

    a. BASF Building Systems; Omniplus.
    b. Dow Corning Corporation; 786 Mildew Resistant.
    c. GE Advanced Materials - Silicones; Sanitary SCS1700.
    d. May National Associates, Inc.; Bondaflex Sil 100 WF.
    e. Tremco Incorporated; Tremsil 200 Sanitary.

2.3 URETHANE JOINT SEALANTS

A. Single-Component, Nonsag, Urethane Joint Sealant: ASTM C 920, Type S, Grade NS, Class 100/50, for Use NT.

1. Products: Subject to compliance with requirements, available products that may be

incorporated into the Work include, but are not limited to, the following:

a. Sika Corporation, Construction Products Division; Sikaflex - 15LM.
b. Tremco Incorporated; Vulkem 921 Dymonic FC.

B. Single-Component, Nonsag, Urethane Joint Sealant: ASTM C 920, Type S, Grade NS, Class 50, for Use NT.

1. Products: Subject to compliance with requirements, available products that may be incorporated into the Work include, but are not limited to, the following:

a. Pacific Polymers International, Inc.; Elasto-Thane 230 LM Type II.
b. Polymeric Systems, Inc.; PSI-901.

C. Single-Component, Nonsag, Urethane Joint Sealant: ASTM C 920, Type S, Grade NS, Class 25, for Use NT.

1. Products: Subject to compliance with requirements, available products that may be incorporated into the Work include, but are not limited to, the following:

a. BASF Building Systems; Sonolastic NP1 Sonalastic TX1 Sonolastic Ultra.
b. Bostik, Inc.; Chem-Calk 900 915 916 Textured.
c. May National Associates, Inc.; Bondaflex PUR 25 Bondaflex PUR 25 Textured Bondaflex PUR 40 FC.
d. Pacific Polymers International, Inc.; Elasto-Thane 230 Type II.
e. Pecora Corporation; Dynatrol I-XL.
f. Polymeric Systems, Inc.; Flexiprene 1000.
g. Schnee-Morehead, Inc.; Permathane SM7100 Permathane SM7108 Permathane SM7110.
h. Sika Corporation, Construction Products Division; Sikaflex - 1a.
i. Tremco Incorporated; Dymonic Vulkem 116.

D. Single-Component, Nonsag, Traffic-Grade, Urethane Joint Sealant: ASTM C 920. Type S, Grade NS, Class 25, for Use T.

1. Products: Subject to compliance with requirements, available products that may be incorporated into the Work include, but are not limited to, the following:

a. BASF Building Systems; Sonolastic NP1 Sonolastic Ultra.
b. May National Associates, Inc.; Bondaflex PUR 40 FC.
c. Pacific Polymers International, Inc.; Elasto-Thane 230 Type II.
d. Sika Corporation, Construction Products Division; Sikaflex - 1a.
e. Tremco Incorporated; Vulkem 116.

E. Single-Component, Pourable, Traffic-Grade, Urethane Joint Sealant: ASTM C 920, Type S, Grade P, Class 25, for Use T.

1. Products: Subject to compliance with requirements, available products that may be incorporated into the Work include, but are not limited to, the following:

a. BASF Building Systems; Sonolastic SL 1.

b. Bostik, Inc.; Chem-Calk 950.
c. May National Associates, Inc.; Bondaflex PUR 35 SL.
d. Pecora Corporation; Urexpan NR-201.
e. Polymeric Systems, Inc.; Flexiprene 952.
f. Schnee-Morehead, Inc.; Permathane SM7101.
g. Sika Corporation. Construction Products Division; Sikaflex - 1CSL.
h. Tremco Incorporated; Vulkem 45.

F. Multicomponent, Nonsag, Urethane Joint Sealant: ASTM C 920, Type M, Grade NS, Class 50, for Use NT.

1. Products: Subject to compliance with requirements, available products that may be incorporated into the Work include, but are not limited to, the following:

a. Pecora Corporation; Dynatrol II.
b. Polymeric Systems, Inc.; PSI-270.
c. Tremco Incorporated; Dymeric 240 Dymeric 240 FC.

G. Multicomponent, Nonsag, Urethane Joint Sealant: ASTM C 920, Type M, Grade NS, Class 25, for Use NT.

1. Products: Subject to compliance with requirements, available products that may be incorporated into the Work include, but are not limited to, the following:

a. BASF Building Systems; Sonolastic NP 2.
b. Bostik, Inc.; Chem-Calk 500.
c. May National Associates, Inc.; Bondaflex PUR 2 NS.
d. Pacific Polymers International, Inc.; Elasto-Thane 227 High Shore Type II Elasto-Thane 227 R Type II Elasto-Thane 227 Type II.
e. Pecora Corporation; Dynatred.
f. Sika Corporation, Construction Products Division; Sikaflex - 2c NS Sikaflex - 2c EZ Mix.
g. Tremco Incorporated; Vulkem 227.

H. Multicomponent, Nonsag, Traffic-Grade, Urethane Joint Sealant: ASTM C 920, Type M, Grade NS, Class 50, for Use T.

1. Products: Subject to compliance with requirements, available products that may be incorporated into the Work include, but are not limited to, the following:

a. Polymeric Systems, Inc.; PSI-270.
b. Tremco Incorporated; Dymeric 240 FC.

I. Multicomponent, Nonsag, Traffic-Grade, Urethane Joint Sealant: ASTM C 920, Type M, Grade NS, Class 25, for Use T.

1. Products: Subject to compliance with requirements, available products that may be incorporated into the Work include, but are not limited to, the following:

a. BASF Building Systems; Sonolastic NP 2.

b. LymTal International, Inc.; Iso-Flex 885 SG.
c. May National Associates, Inc.; Bondaflex PUR 2 NS.
d. Pacific Polymers International, Inc.; Elasto-Thane 227 High Shore Type II Elasto-Thane 227 Type II.
e. Pecora Corporation; Dynatred.
f. Sika Corporation, Construction Products Division; Sikaflex - 2c NS Sikaflex - 2c EZ Mix.
g. Tremco Incorporated; Vulkem 227.

J. Immersible, Single-Component, Nonsag, Traffic-Grade, Urethane Joint Sealant: ASTM C 920, Type S, Grade NS, Class 25, for Uses T and I.

1. Products: Subject to compliance with requirements, available products that may be incorporated into the Work include, but are not limited to, the following:

a. BASF Building Systems; Sonolastic NP1.
b. Sika Corporation, Construction Products Division; Sikaflex - 1a.
c. Tremco Incorporated; Vulkem 116.

K. Immersible, Single-Component, Pourable, Traffic-Grade, Urethane Joint Sealant: ASTM C 920, Type S, Grade P, Class 25, for Uses T and I.

1. Products: Subject to compliance with requirements, available products that may be incorporated into the Work include, but are not limited to, the following:

a. Sika Corporation, Construction Products Division; Sikaflex - 1CSL.
b. Tremco Incorporated; Vulkem 45.

L. Immersible Multicomponent, Nonsag, Traffic-Grade, Urethane Joint Sealant: ASTM C 920, Type M, Grade NS, Class 25, for Uses T and I.

1. Products: Subject to compliance with requirements, available products that may be incorporated into the Work include, but are not limited to, the following:

a. BASF Building Systems; Sonolastic NP 2.
b. LymTal International, Inc.; Iso-Flex 885 SG.
c. May National Associates, Inc.; Bondaflex PUR 2 NS.
d. Pecora Corporation; Dynatred.
e. Tremco Incorporated; Vulkem 227.

M. Immersible Multicomponent, Pourable, Traffic-Grade, Urethane Joint Sealant: ASTM C 920. Type M, Grade P, Class 25, for Use T and I.

1. Products: Subject to compliance with requirements, available products that may be incorporated into the Work include, but are not limited to, the following:

a. LymTal International, Inc.; Iso-Flex 880 GB.
b. May National Associates, Inc.; Bondaflex PUR 2 SL.
c. Tremco Incorporated; Vulkem 245.

2.4 POLYSULFIDE JOINT SEALANTS

A. Single-Component, Nonsag, Polysulfide Joint Sealant: ASTM C 920, Type S, Grade NS, Class 25, for Use NT.

1. Products: Subject to compliance with requirements, available products that may be incorporated into the Work include, but are not limited to, the following:

a. Pacific Polymers International, Inc.; Elastoseal 230 Type I.
b. W. R. Meadows, Inc.; Deck-O-Seal One Step.

B. Multicomponent, Nonsag, Polysulfide Joint Sealant: ASTM C 920, Type M, Grade NS, Class 25, for Use NT.

1. Products: Subject to compliance with requirements, available products that may be incorporated into the Work include, but are not limited to, the following:

a. BASF Building Systems; Sonolastic Polysulfide Sealant.
b. Pacific Polymers International, Inc.; Elasto-Seal 227 Type II.
c. Pecora Corporation; Synthacalk GC-2+.
d. W. R. Meadows, Inc.; Deck-O-Seal Gun Grade.

C. Multicomponent, Nonsag, Traffic-Grade, Polysulfide Joint Sealant: ASTM C 920, Type M, Grade NS, Class 25, for Use T.

1. Products: Subject to compliance with requirements, available products that may be incorporated into the Work include, but are not limited to, the following:

a. BASF Building Systems; Sonolastic Polysulfide Sealant.
b. Pecora Corporation; Synthacalk GC-2+.

D. Multicomponent, Pourable, Traffic-Grade, Polysulfide Joint Sealant: ASTM C 920, Type M, Grade P, Class 25, for Use T.

1. Products: Subject to compliance with requirements, available products that may be incorporated into the Work include, but are not limited to, the following:

a. Pacific Polymers International, Inc.; Elastoseal 227 Type I.
b. W. R. Meadows, Inc.; Deck-O-Seal 125 Deck-O-Seal 150.

E. Immersible, Multicomponent Nonsag, Traffic-Grade, Polysulfide Joint Sealant: ASTM C 920, Type M, Grade NS, Class 25, for Use T and Use I.

1. Products: Subject to compliance with requirements, available products that may be incorporated into the Work include, but are not limited to, the following:

a. Pecora Corporation; Synthacalk GC-2+.

2.5 LATEX JOINT SEALANTS

A. Latex Joint Sealant: Acrylic latex or siliconized acrylic latex, ASTM C 834, Type OP, Grade NF.

1. Products: Subject to compliance with requirements, available products that may be incorporated into the Work include, but are not limited to, the following:

    a. BASF Building Systems; Sonolac.
    b. Bostik, Inc.; Chem-Calk 600.
    c. May National Associates, Inc.; Bondaflex 600 Bondaflex Sil-A 700.
    d. Pecora Corporation; AC-20+.
    e. Schnee-Morehead, Inc.; SM 8200.
    f. Tremco Incorporated; Tremflex 834.

2.6 SOLVENT-RELEASE-CURING JOINT SEALANTS

A. Acrylic-Based Joint Sealant: ASTM C 1311.

1. Products: Subject to compliance with requirements, available products that may be incorporated into the Work include, but are not limited to, the following:

    a. Schnee-Morehead, Inc.; Acryl-R Acrylic Sealant.
    b. Tremco Incorporated; Mono 555.

B. Butyl-Rubber-Based Joint Sealant: ASTM C 1311.

1. Products: Subject to compliance with requirements, available products that may be incorporated into the Work include, but are not limited to, the following:

    a. Bostik, Inc.; Chem-Calk 300.
    b. Pecora Corporation; BC-158.
    c. Tremco Incorporated; Tremco Butyl Sealant.

2.7 PREFORMED JOINT SEALANTS

A. Preformed Silicone Joint Sealants: Manufacturer's standard sealant consisting of precured low-modulus silicone extrusion, in sizes to fit joint widths indicated, combined with a neutral-curing silicone sealant for bonding extrusions to substrates.

1. Products: Subject to compliance with requirements, available products that may be incorporated into the Work include, but are not limited to, the following:

    a. Dow Corning Corporation; 123 Silicone Seal.
    b. GE Advanced Materials - Silicones; UltraSpan US1100.
    c. May National Associates, Inc.; Bondaflex Silbridge 300.
    d. Pecora Corporation; Sil-Span.
    e. Sealex, Inc.; ImmerSeal.

B. Preformed Foam Joint Sealant: Manufacturer's standard preformed, precompressed, open-cell foam sealant manufactured from urethane foam with minimum density of 10 lb/cu. ft. (160 kg/cu. m) and impregnated with a nondrying, water-repellent agent. Factory produce in precompressed sizes in roll or stick form to fit joint widths indicated; coated on one side with a pressure-sensitive adhesive and covered with protective wrapping.

1. Products: Subject to compliance with requirements, available products that may be incorporated into the Work include, but are not limited to, the following:

    a. Dayton Superior Specialty Chemicals; Polytite Standard.
    b. EMSEAL Joint Systems, Ltd.; Emseal 25V.
    c. Sandell Manufacturing Co., Inc.; Polyseal.
    d. Schul International, Inc.; Sealtite Sealtite 50N.
    e. Willseal USA, LLC; Willseal 150 Willseal 250.

2.8 ACOUSTICAL JOINT SEALANTS

A. Acoustical Joint Sealant: Manufacturer's standard nonsag, paintable, nonstaining latex sealant complying with ASTM C 834. Product effectively reduces airborne sound transmission through perimeter joints and openings in building construction as demonstrated by testing representative assemblies according to ASTM E 90.

1. Products: Subject to compliance with requirements, available products that may be incorporated into the Work include, but are not limited to, the following:

    a. Pecora Corporation; AC-20 FTR AIS-919.
    b. USG Corporation; SHEETROCK Acoustical Sealant.

2.9 JOINT SEALANT BACKING

A. General: Provide sealant backings of material that are nonstaining; are compatible with joint substrates, sealants, primers, and other joint fillers; and are approved for applications indicated by sealant manufacturer based on field experience and laboratory testing.

B. Cylindrical Sealant Backings: ASTM C 1330, Type C (closed-cell material with a surface skin) Type O (open-cell material) Type B (bicellular material with a surface skin) or any of the preceding types, as approved in writing by joint-sealant manufacturer for joint application indicated, and of size and density to control sealant depth and otherwise contribute to producing optimum sealant performance.

C. Bond-Breaker Tape: Polyethylene tape or other plastic tape recommended by sealant manufacturer for preventing sealant from adhering to rigid, inflexible joint-filler materials or joint surfaces at back of joint. Provide self-adhesive tape where applicable.

2.10 MISCELLANEOUS MATERIALS

A. Primer: Material recommended by joint-sealant manufacturer where required for adhesion of sealant to joint substrates indicated, as determined from preconstruction joint-sealant-substrate tests and field tests.

B. Cleaners for Nonporous Surfaces: Chemical cleaners acceptable to manufacturers of sealants and sealant backing materials, free of oily residues or other substances capable of staining or harming joint substrates and adjacent nonporous surfaces in any way and formulated to promote optimum

adhesion of sealants to joint substrates.

C. Masking Tape: Nonstaining, nonabsorbent material compatible with joint sealants and surfaces adjacent to joints.

PART 3 - EXECUTION

3.1 EXAMINATION

A. Examine joints indicated to receive joint sealants, with Installer present, for compliance with requirements for joint configuration, installation tolerances, and other conditions affecting joint-sealant performance.

B. Proceed with installation only after unsatisfactory conditions have been corrected.

3.2 PREPARATION

A. Surface Cleaning of Joints: Clean out joints immediately before installing joint sealants to comply with joint-sealant manufacturer's written instructions and the following requirements:

1. Remove all foreign material from joint substrates that could interfere with adhesion of joint sealant, including dust, paints (except for permanent, protective coatings tested and approved for sealant adhesion and compatibility by sealant manufacturer), old joint sealants, oil, grease, waterproofing, water repellents, water, surface dirt, and frost.
2. Clean porous joint substrate surfaces by brushing, grinding, mechanical abrading, or a combination of these methods to produce a clean, sound substrate capable of developing optimum bond with joint sealants. Remove loose particles remaining after cleaning operations above by vacuuming or blowing out joints with oil-free compressed air. Porous joint substrates include the following:

    a. Concrete.
    b. Masonry.
    c. Unglazed surfaces of ceramic tile.
    d. Exterior stucco finish systems.

3. Remove laitance and form-release agents from concrete.
4. Clean nonporous joint substrate surfaces with chemical cleaners or other means that do not stain, harm substrates, or leave residues capable of interfering with adhesion of joint sealants. Nonporous joint substrates include the following:

    a. Metal.
    b. Glass.
    c. Porcelain enamel.
    d. Glazed surfaces of ceramic tile.

B. Joint Priming: Prime joint substrates where recommended by joint-sealant manufacturer or as indicated by preconstruction joint-sealant-substrate tests or prior experience. Apply primer to comply with joint-sealant manufacturer's written instructions. Confine primers to areas of joint-sealant bond; do not allow spillage or migration onto adjoining surfaces.

C. Masking Tape: Use masking tape where required to prevent contact of sealant or primer with adjoining surfaces that otherwise would be permanently stained or damaged by such contact or by cleaning methods required to remove sealant smears. Remove tape immediately after tooling without disturbing joint seal.

3.3 INSTALLATION OF JOINT SEALANTS

A. General: Comply with joint-sealant manufacturer's written installation instructions for products and applications indicated, unless more stringent requirements apply.

B. Sealant Installation Standard: Comply with recommendations in ASTM C 1193 for use of joint sealants as applicable to materials, applications, and conditions indicated.

C. Install sealant backings of kind indicated to support sealants during application and at position required to produce cross-sectional shapes and depths of installed sealants relative to joint widths that allow optimum sealant movement capability.

1. Do not leave gaps between ends of sealant backings.
2. Do not stretch, twist, puncture, or tear sealant backings.
3. Remove absorbent sealant backings that have become wet before sealant application and replace them with dry materials.

D. Install bond-breaker tape behind sealants where sealant backings are not used between sealants and backs of joints.

E. Install sealants using proven techniques that comply with the following and at the same time backings are installed:

1. Place sealants so they directly contact and fully wet joint substrates.
2. Completely fill recesses in each joint configuration.
3. Produce uniform, cross-sectional shapes and depths relative to joint widths that allow optimum sealant movement capability.

F. Tooling of Nonsag Sealants: Immediately after sealant application and before skinning or curing begins, tool sealants according to requirements specified in subparagraphs below to form smooth, uniform beads of configuration indicated; to eliminate air pockets; and to ensure contact and adhesion of sealant with sides of joint.

1. Remove excess sealant from surfaces adjacent to joints.
2. Use tooling agents that are approved in writing by sealant manufacturer and that do not discolor sealants or adjacent surfaces.
3. Provide concave joint profile per Figure 8A in ASTM C 1193, unless otherwise indicated.
4. Provide flush joint profile where indicated per Figure 8B in ASTM C 1193.
5. Provide recessed joint configuration of recess depth and at locations indicated per Figure 8C in ASTM C 1193.

    a. Use masking tape to protect surfaces adjacent to recessed tooled joints.

G. Installation of Preformed Silicone-Sealant System: Comply with the following requirements:

1. Apply masking tape to each side of joint, outside of area to be covered by sealant system.
2. Apply silicone sealant to each side of joint to produce a bead of size complying with preformed silicone-sealant system manufacturer's written instructions and covering a bonding area of not less than 3/8 inch (10 mm). Hold edge of sealant bead 1/4 inch (6 mm) inside masking tape.
3. Within 10 minutes of sealant application, press silicone extrusion into sealant to wet extrusion and substrate. Use a roller to apply consistent pressure and ensure uniform contact between sealant and both extrusion and substrate.
4. Complete installation of sealant system in horizontal joints before installing in vertical joints. Lap vertical joints over horizontal joints. At ends of joints, cut silicone extrusion with a razor knife.

H. Installation of Preformed Foam Sealants: Install each length of sealant immediately after removing protective wrapping. Do not pull or stretch material. Produce seal continuity at ends, turns, and intersections of joints. For applications at low ambient temperatures, apply heat to sealant in compliance with sealant manufacturer's written instructions.

I. Acoustical Sealant Installation: At sound-rated assemblies and elsewhere as indicated, seal construction at perimeters, behind control joints, and at openings and penetrations with a continuous bead of acoustical sealant. Install acoustical sealant at both faces of partitions at perimeters and through penetrations. Comply with ASTM C 919 and with manufacturer's written recommendations.

3.4 FIELD QUALITY CONTROL

A. Field-Adhesion Testing: Field test joint-sealant adhesion to joint substrates as follows:

1. Extent of Testing: Test completed and cured sealant joints as follows:

   a. Perform 10 tests for the first 1000 feet (300 m) of joint length for each kind of sealant and joint substrate.
   b. Perform 1 test for each 1000 feet (300 m) of joint length thereafter or 1 test per each floor per elevation.

2. Test Method: Test joint sealants according to Method A, Field-Applied Sealant Joint Hand Pull Tab, in Appendix X1 in ASTM C 1193 or Method A, Tail Procedure, in ASTM C 1521.

   a. For joints with dissimilar substrates, verify adhesion to each substrate separately; extend cut along one side, verifying adhesion to opposite side. Repeat procedure for opposite side.

3. Inspect tested joints and report on the following:

   a. Whether sealants filled joint cavities and are free of voids.
   b. Whether sealant dimensions and configurations comply with specified requirements.
   c. Whether sealants in joints connected to pulled-out portion failed to adhere to joint substrates or tore cohesively. Include data on pull distance used to test each kind of product and joint substrate. Compare these results to determine if adhesion passes

sealant manufacturer's field-adhesion hand-pull test criteria.

4. Record test results in a field-adhesion-test log. Include dates when sealants were installed, names of persons who installed sealants, test dates, test locations, whether joints were primed, adhesion results and percent elongations, sealant fill, sealant configuration, and sealant dimensions.
5. Repair sealants pulled from test area by applying new sealants following same procedures used originally to seal joints. Ensure that original sealant surfaces are clean and that new sealant contacts original sealant.

B. Evaluation of Field-Adhesion Test Results: Sealants not evidencing adhesive failure from testing or noncompliance with other indicated requirements will be considered satisfactory. Remove sealants that fail to adhere to joint substrates during testing or to comply with other requirements. Retest failed applications until test results prove sealants comply with indicated requirements.

3.5 CLEANING

A. Clean off excess sealant or sealant smears adjacent to joints as the Work progresses by methods and with cleaning materials approved in writing by manufacturers of joint sealants and of products in which joints occur.

3.6 PROTECTION

A. Protect joint sealants during and after curing period from contact with contaminating substances and from damage resulting from construction operations or other causes so sealants are without deterioration or damage at time of Substantial Completion. If, despite such protection, damage or deterioration occurs, cut out and remove damaged or deteriorated joint sealants immediately so installations with repaired areas are indistinguishable from original work.

3.7 JOINT-SEALANT SCHEDULE

A. Joint-Sealant Application: Exterior joints in horizontal traffic surfaces.

1. Joint Locations:
   a. Isolation and contraction joints in cast-in-place concrete slabs.
   b. Tile control and expansion joints.
   c. Joints between different materials listed above.
   d. Other joints as indicated.
2. Urethane Joint Sealant: Single component, nonsag, traffic grade.
3. Preformed Joint Sealant: Preformed foam sealant.

B. Joint-Sealant Application: Exterior joints in vertical surfaces and horizontal nontraffic surfaces.

1. Joint Locations:

   a. Construction joints in cast-in-place concrete.
   b. Joints between plant-precast architectural concrete units.
   c. Control and expansion joints in unit masonry.
   d. Joints in dimension stone cladding.

e. Joints in exterior stucco finish systems.

f. Joints between different materials listed above.
g. Perimeter joints between materials listed above and frames of doors windows and louvers.
h. Control and expansion joints in ceilings and other overhead surfaces.

2. Urethane Joint Sealant: Single component, nonsag, Class 100/50.
3. Preformed Joint Sealant: Preformed silicone Preformed foam.

C. Joint-Sealant Application: Interior joints in horizontal traffic surfaces.

1. Joint Locations:

a. Isolation joints in cast-in-place concrete slabs.
b. Control and expansion joints in tile flooring.
c. Other joints as indicated.

2. Silicone Joint Sealant: Single component, nonsag, traffic grade, neutral curing

D. Joint-Sealant Application: Interior joints in vertical surfaces and horizontal nontraffic surfaces.

1. Joint Locations:

a. Control and expansion joints on exposed interior surfaces of exterior walls.
b. Perimeter joints of exterior openings where indicated.
c. Tile control and expansion joints.
d. Vertical joints on exposed surfaces of interior unit masonry concrete walls and partitions.
e. Joints on underside of plant-precast structural concrete beams and planks.
f. Perimeter joints between interior wall surfaces and frames of interior doors windows and elevator entrances.

2. Joint Sealant: Acrylic based joint sealant.
3. Joint-Sealant Color: As selected by Architect from manufacturer's full range of colors.

E. Joint-Sealant Application: Mildew-resistant interior joints in vertical surfaces and horizontal nontraffic surfaces.

1. Joint Sealant Location:

a. Joints between plumbing fixtures and adjoining walls, floors, and counters.
b. Tile control and expansion joints where indicated.
c. Other joints as indicated.

2. Joint Sealant: Mildew resistant, single component, nonsag, neutral curing, Silicone
3. Joint-Sealant Color: As selected by Architect from manufacturer's full range of colors.

END OF SECTION 07 92 00

SECTION 079219 - ACOUSTICAL JOINT SEALANTS

1.1 SUMMARY

A. Section Includes:

1. Acoustical joint sealants.

1.2 ACTION SUBMITTALS

A. Product data.

B. Samples: Manufacturer's color charts consisting of strips of cured sealants, showing full range of available colors for each product exposed to view.

C. Acoustical joint-sealant schedule.

1.3 INFORMATIONAL SUBMITTALS

A. Test and Evaluation Reports:

1. Product test reports.

B. Sample warranties.

1.4 CLOSEOUT SUBMITTALS

A. Warranty Documentation:

1. Manufacturers' special warranties.
2. Installer's special warranties.

1.5 WARRANTY

A. Installer's Special Warranty: Installer agrees to repair or replace acoustical joint sealants that do not comply with performance and other requirements specified in this Section within specified warranty period.

Verify warranty periods for acoustical joint-sealant installation.

1. Warranty Period: **Two** years from date of Substantial Completion.

B. Manufacturer's Special Warranty: Manufacturer agrees to furnish acoustical joint sealants to repair or replace those joint sealants that do not comply with performance and other requirements specified in this Section within specified warranty period.

1. Warranty Period: 2 years from date of Substantial Completion.

PART 2 - PRODUCTS

2.1 ACOUSTICAL JOINT SEALANTS

A. Acoustical joint-sealant products that effectively reduce airborne sound transmission through perimeter joints and openings in building construction, as demonstrated by testing representative assemblies in accordance with ASTM E90.

B. Acoustical Sealant for Exposed **and Concealed** Joints: Manufacturer's standard nonsag, paintable, nonstaining latex acoustical sealant complying with ASTM C834.

1. Manufacturer’s include but are not limited to the following.
   a. Hilti Inc.
   b. Pecora
   c. Tremco
2. Colors of Exposed Acoustical Joint Sealants: **As selected by Architect from manufacturer's full range of colors**.

2.2 MISCELLANEOUS MATERIALS

A. Primer: Material recommended by acoustical joint-sealant manufacturer where required for adhesion of sealant to joint substrates.

B. Cleaners for Nonporous Surfaces: Chemical cleaners acceptable to manufacturers of sealants and sealant backing materials, free of oily residues or other substances capable of staining or harming joint substrates and adjacent nonporous surfaces in any way, and formulated to promote optimum adhesion of sealants to joint substrates.

C. Masking Tape: Nonstaining, nonabsorbent material compatible with joint sealants and surfaces adjacent to joints.

PART 3 - EXECUTION

3.1 EXAMINATION

A. Examine joints indicated to receive acoustical joint sealants, with Installer present, for compliance with requirements for joint configuration, installation tolerances, and other conditions affecting performance of the Work.

B. Proceed with installation only after unsatisfactory conditions have been corrected.

3.2 PREPARATION

A. Surface Cleaning of Joints: Clean out joints immediately before installing acoustical joint sealants to comply with joint-sealant manufacturer's written instructions.

B. Joint Priming: Prime joint substrates where recommended by acoustical joint-sealant manufacturer. Apply primer to comply with joint-sealant manufacturer's written instructions. Confine primers to areas of joint-sealant bond; do not allow spillage or migration onto adjoining surfaces.

C. Masking Tape: Use masking tape where required to prevent contact of sealant or primer with adjoining surfaces that otherwise would be permanently stained or damaged by such contact or by cleaning methods required to remove sealant smears. Remove tape immediately after tooling without disturbing joint seal.

3.3 INSTALLATION OF ACOUSTICAL JOINT SEALANTS

A. Comply with acoustical joint-sealant manufacturer's written installation instructions unless more stringent requirements apply.

B. STC-Rated Assemblies: Seal construction at perimeters, behind control joints, and at openings and penetrations with a continuous bead of acoustical joint sealant. Install acoustical joint sealants at both faces of partitions, at perimeters, and through penetrations. Comply with ASTM C919, ASTM C1193, and manufacturer's written instructions for closing off sound-flanking paths around or through assemblies, including sealing partitions to underside of floor slabs above acoustical ceilings.

C. Acoustical Ceiling Areas: Apply acoustical joint sealant at perimeter edge moldings of acoustical ceiling areas in a continuous ribbon concealed on back of vertical legs of moldings before they are installed.

END OF SECTION 079219

THIS PAGE LEFT INTENTIONALLY BLANK

SECTION 081113 - HOLLOW METAL DOORS AND FRAMES

PART 1 - GENERAL

1.1 SUMMARY

A. Section includes:

1. Interior standard steel doors and frames.
2. Exterior standard steel doors and frames.
3. Interior custom hollow-metal doors and frames.
4. Exterior custom hollow-metal doors and frames.

1.2 ACTION SUBMITTALS

A. Product Data: For each type of product.

B. Shop Drawings: Include the following:

1. Elevations of each door type.
2. Details of doors, including vertical- and horizontal-edge details and metal thicknesses.
3. Frame details for each frame type, including dimensioned profiles and metal thicknesses.

C. Product Schedule: For hollow-metal doors and frames, prepared by or under the supervision of supplier, using same reference numbers for details and openings as those on Drawings. Coordinate with final door hardware schedule.

1.3 INFORMATIONAL SUBMITTALS

A. Product test reports.

B. Field quality control reports.

1.4 CLOSEOUT SUBMITTALS

A. Record Documents: For fire-rated doors, list of door numbers and applicable room name and number to which door accesses.

1.5 QUALITY ASSURANCE

A. Fire-Rated Door Inspector Qualifications: Inspector for field quality control inspections of fire-rated door assemblies shall meet the qualifications set forth in NFPA 80, Section 5.2.3.1 and the following:

1. Door and Hardware Institute Fire and Egress Door Assembly Inspector (FDAI) certification.

PART 2 - PRODUCTS

2.1 MANUFACTURERS

A. Ceco Door

B. Curries Company

2.2 PERFORMANCE REQUIREMENTS

A. Fire-Rated Door Assemblies: Assemblies complying with NFPA 80 that are listed and labeled by a qualified testing agency acceptable to authorities having jurisdiction for fire-protection ratings **and temperature-rise limits** indicated on Drawings, based on testing at positive pressure in accordance with NFPA 252 or UL 10C.

1. Smoke- and Draft-Control Door Assemblies: Listed and labeled for smoke and draft control by a qualified testing agency acceptable to authorities having jurisdiction, based on testing in accordance with UL 1784 and installed in compliance with NFPA 105.
2. Temperature-Rise Limit: **At vertical exit enclosures and exit passageways**, provide doors that have a maximum transmitted temperature end point of not more than 450 deg F (250 deg C) above ambient after 30 minutes of standard fire-test exposure.

B. Fire-Rated, Borrowed-Lite Assemblies: Assemblies complying with NFPA 80 and listed and labeled by a qualified testing agency acceptable to authorities having jurisdiction, for fire-protection ratings indicated, based on testing in accordance with NFPA 257 or UL 9.

C. Thermally Rated Door Assemblies: Provide door assemblies with U-factor of not more than **0.50 deg Btu/F x h x sq. ft. (2.84 W/K x sq. m)** when tested in accordance with ASTM C518.

2.3 INTERIOR STANDARD STEEL DOORS AND FRAMES

A. Construct hollow-metal doors and frames to comply with standards indicated for materials, fabrication, hardware locations, hardware reinforcement, tolerances, and clearances, and as specified.

B. Heavy-Duty Doors and Frames: ANSI/SDI A250.8, Level 2; ANSI/SDI A250.4, Level B.

1. Doors:

a. Type: As indicated in the Door and Frame Schedule.
b. Thickness: 1-3/4 inches (44.5 mm).
c. Face: **Metallic-coated** steel sheet, minimum thickness of 0.042 inch (1.0 mm).
d. Edge Construction: **Model 2, Seamless**.

e. Core: **Manufacturer's standard (Interior locations, unless fire rated)) Polyurethane** (exterior locations).
f. Fire-Rated Core: Manufacturer's standard **and temperature-rise-rated** doors.

2. Frames:

a. Materials: **Metallic-coated** steel sheet, minimum thickness of 0.053 inch (1.3 mm).
b. **Sidelite and Transom** Frames: Fabricated from same thickness material as adjacent door frame.
c. Construction: **Face welded**.

2.4 EXTERIOR STANDARD STEEL DOORS AND FRAMES

A. Construct hollow-metal doors and frames to comply with standards indicated for materials, fabrication, hardware locations, hardware reinforcement, tolerances, and clearances, and as specified.

B. Heavy-Duty Doors and Frames: ANSI/SDI A250.8, Level 2; ANSI/SDI A250.4, Level B. Doors:

a. Type: As indicated in the Door and Frame Schedule.
b. Thickness: 1-3/4 inches (44.5 mm).
c. Face: Metallic-coated steel sheet, minimum thickness of 0.042 inch (1.0 mm), with minimum **A60 (ZF180)** coating.
d. Edge Construction: **Model 1, Full Flush**.
e. Top Edge Closures: Close top edges of doors with flush closures of same material as face sheets. Seal joints against water penetration.
f. Bottom Edges: Close bottom edges of doors **where required for attachment of weather stripping** with end closures or channels of same material as face sheets. Provide weep-hole openings in bottoms of exterior doors to permit moisture to escape.
g. Core: **Polyurethane,Vertical steel stiffener**.

2. Frames:

a. Materials: Metallic-coated steel sheet, minimum thickness of 0.053 inch (1.3 mm), with minimum **A60 (ZF180)** coating.
b. Construction: **Full profile welded**.

2.5 BORROWED LITES

A. Fabricate of **metallic-coated** steel sheet, minimum thickness of **0.053 inch (1.3 mm)**.

B. Construction: **Full profile welded**.

C. Fabricate in one piece except where handling and shipping limitations require multiple sections. Where frames are fabricated in sections due to shipping or handling limitations, provide

alignment plates or angles at each joint, fabricated of metal of same or greater thickness as metal as frames.

D. Provide countersunk, flat- or oval-head exposed screws and bolts for exposed fasteners unless otherwise indicated.

2.6 FRAME ANCHORS

A. Jamb Anchors:

1. Type: Anchors of minimum size and type required by applicable door and frame standard, and suitable for performance level indicated.
2. Quantity: Minimum of three anchors per jamb, with one additional anchor for frames with no floor anchor. Provide one additional anchor for each 24 inches (610 mm) of frame height above 7 feet (2.1 m).
3. Postinstalled Expansion Anchor: Minimum 3/8-inch- (9.5-mm-) diameter bolts with expansion shields or inserts, with manufacturer's standard pipe spacer. Do not leave head of anchor exposed to view.

B. Floor Anchors: Provide floor anchors for each jamb and mullion that extends to floor.

C. Floor Anchors for Concrete Slabs with Underlayment: Adjustable-type anchors with extension clips, allowing not less than 2-inch (51-mm) height adjustment. Terminate bottom of frames at top of underlayment.

D. Material: ASTM A879/A879M, Commercial Steel (CS), 04Z (12G) coating designation; mill phosphatized.

1. For anchors built into exterior walls, steel sheet complying with ASTM A1008/A1008M or ASTM A1011/A1011M; hot-dip galvanized in accordance with ASTM A153/A153M, Class B.

2.7 MATERIALS

A. Cold-Rolled Steel Sheet: ASTM A1008/A1008M, Commercial Steel (CS), Type B; suitable for exposed applications.

B. Hot-Rolled Steel Sheet: ASTM A1011/A1011M, Commercial Steel (CS), Type B; free of scale, pitting, or surface defects; pickled and oiled.

C. Metallic-Coated Steel Sheet: ASTM A653/A653M, Commercial Steel (CS), Type B.

D. Inserts, Bolts, and Fasteners: Hot-dip galvanized in accordance with ASTM A153/A153M.

E. Power-Actuated Fasteners in Concrete: Fastener system of type suitable for application indicated, fabricated from corrosion-resistant materials, with clips or other accessory devices for attaching hollow-metal frames of type indicated.

F. Mineral-Fiber Insulation: ASTM C665, Type I (blankets without membrane facing); consisting of fibers manufactured from slag or rock wool; with maximum flame-spread and smoke-developed indexes of 25 and 50, respectively; passing ASTM E136 for combustion characteristics.

G. Glazing: Comply with requirements in Section 088000 "Glazing."

2.8 FABRICATION

Retain "Door Astragals" Paragraph below if astragals are required for fire-protection rating.

A. Door Astragals: Provide overlapping astragal on one leaf of pairs of doors where required by NFPA 80 for fire-performance rating or where indicated. Extend minimum 3/4 inch (19 mm) beyond edge of door on which astragal is mounted or as required to comply with published listing of qualified testing agency.

B. Hollow-Metal Frames: Fabricate in one piece except where handling and shipping limitations require multiple sections. Where frames are fabricated in sections, provide alignment plates or angles at each joint, fabricated of metal of same or greater thickness as frames.

1. **Sidelite and Transom Bar** Frames: Provide closed tubular members with no visible face seams or joints, fabricated from same material as door frame. Fasten members at crossings and to jambs by welding**, or by rigid mechanical anchors**.
2. Provide countersunk, flat- or oval-head exposed screws and bolts for exposed fasteners unless otherwise indicated.
3. Door Silencers: Except on weather-stripped frames, drill stops to receive door silencers as follows. Keep holes clear during construction.

    a. Single-Door Frames: Drill stop in strike jamb to receive three door silencers.
    b. Double-Door Frames: Drill stop in head jamb to receive two door silencers.

C. Hardware Preparation: Factory prepare hollow-metal doors and frames to receive templated mortised hardware, and electrical wiring; include cutouts, reinforcement, mortising, drilling, and tapping in accordance with ANSI/SDI A250.6, the Door Hardware Schedule, and templates.

1. Reinforce doors and frames to receive nontemplated, mortised, and surface-mounted door hardware.
2. Comply with BHMA A156.115 for preparing hollow-metal doors and frames for hardware.

D. Glazed Lites: Provide stops and moldings around glazed lites where indicated. Form corners of stops and moldings with [**butted**] [**or**] [**mitered**] hairline joints.

1. Provide stops and moldings flush with face of door, and with [**beveled**] [**square**] stops unless otherwise indicated.
2. Multiple Glazed Lites: Provide fixed and removable stops and moldings so that each glazed lite is capable of being removed independently.

3. Provide fixed frame moldings on outside of exterior and on secure side of interior doors and frames. Provide loose stops and moldings on inside of hollow-metal doors and frames.
4. Coordinate rabbet width between fixed and removable stops with glazing and installation types indicated.
5. Provide stops for installation with countersunk flat- or oval-head machine screws spaced uniformly not more than 9 inches (230 mm) o.c. and not more than 2 inches (51 mm) o.c. from each corner.

2.9 STEEL FINISHES

A. Prime Finish: Clean, pretreat, and apply manufacturer's standard primer.

1. Shop Primer: Manufacturer's standard, fast-curing, lead- and chromate-free primer complying with ANSI/SDI A250.10; recommended by primer manufacturer for substrate; compatible with substrate and field-applied coatings despite prolonged exposure.

PART 3 - EXECUTION

3.1 PREPARATION

A. Remove welded-in shipping spreaders installed at factory. Restore exposed finish by grinding, filling, and dressing, as required to make repaired area smooth, flush, and invisible on exposed faces. Touch up factory-applied finishes where spreaders are removed.

B. Drill and tap doors and frames to receive non-templated, mortised, and surface-mounted door hardware.

3.2 INSTALLATION

A. Hollow-Metal Frames: Comply with **ANSI/SDI A250.11**.

1. Set frames accurately in position; plumbed, aligned, and braced securely until permanent anchors are set. After wall construction is complete, remove temporary braces without damage to completed Work.

   a. Where frames are fabricated in sections, field splice at approved locations by welding face joint continuously; grind, fill, dress, and make splice smooth, flush, and invisible on exposed faces. Touch-up finishes.
   b. Install frames with removable stops located on secure side of opening.

2. Fire-Rated Openings: Install frames in accordance with NFPA 80.
3. Floor Anchors: Secure with post-installed expansion anchors.

   a. Floor anchors may be set with power-actuated fasteners instead of post-installed expansion anchors if so indicated and approved on Shop Drawings.

4. Solidly pack mineral-fiber insulation inside frames.
5. Masonry Walls: Coordinate installation of frames to allow for solidly filling space between frames and masonry with grout or mortar.
6. In-Place Concrete or Masonry Construction: Secure frames in place with postinstalled expansion anchors. **Countersink anchors, and fill and make smooth, flush, and invisible on exposed faces.**
7. Installation Tolerances: Adjust hollow-metal frames to the following tolerances:

    a. Squareness: Plus or minus 1/16 inch (1.6 mm), measured at door rabbet on a line 90 degrees from jamb perpendicular to frame head.
    b. Alignment: Plus or minus 1/16 inch (1.6 mm), measured at jambs on a horizontal line parallel to plane of wall.
    c. Twist: Plus or minus 1/16 inch (1.6 mm), measured at opposite face corners of jambs on parallel lines, and perpendicular to plane of wall.
    d. Plumbness: Plus or minus 1/16 inch (1.6 mm), measured at jambs at floor.

B. Hollow-Metal Doors: Fit and adjust hollow-metal doors accurately in frames, within clearances specified below.

1. Non-Fire-Rated Steel Doors: Comply with **ANSI/SDI A250.8.**
2. Fire-Rated Doors: Install doors with clearances in accordance with NFPA 80.
3. Smoke-Control Doors: Install doors in accordance with NFPA 105.

C. Glazing: Comply with installation requirements in Section 088000 "Glazing" and with hollow-metal manufacturer's written instructions.

3.3 FIELD QUALITY CONTROL

A. Repair or remove and replace installations where inspections indicate that they do not comply with specified requirements.

B. Re-inspect repaired or replaced installations to determine if replaced or repaired door assembly installations comply with specified requirements.

3.4 REPAIR

A. Prime-Coat Touchup: Immediately after erection, sand smooth rusted or damaged areas of prime coat and apply touchup of compatible air-drying, rust-inhibitive primer.

B. Metallic-Coated Surface Touchup: Clean abraded areas and repair with galvanizing repair paint according to manufacturer's written instructions.

C. Touchup Painting: Cleaning and touchup painting of abraded areas of paint are specified in painting Sections.

END OF SECTION 081113

THIS PAGE LEFT INTENTIONALLY BLANK

SECTION 081416 - FLUSH WOOD DOORS

PART 1 - GENERAL

1.1 SUMMARY

A. Section Includes:

1. Five-ply flush wood veneer-faced doors for transparent finish.
2. Factory fitting flush wood doors to frames and factory machining for hardware.

1.2 ACTION SUBMITTALS

A. Product Data: For each type of product, including the following:

1. Door core materials and construction.
2. Door edge construction
3. Door face type and characteristics.
4. Door louvers.
5. Door trim for openings.
6. Door frame construction.
7. Factory-machining criteria.
8. Factory- **finishing** specifications.

B. Shop Drawings: Indicate location, size, and hand of each door; elevation of each type of door; construction details not covered in Product Data; and the following:

1. Door schedule indicating door **and frame** location, type, size, fire protection rating, and swing.
2. Door elevations, dimension and locations of hardware, lite and louver cutouts, and glazing thicknesses.
3. Details of frame for each frame type, including dimensions and profile.
4. Details of electrical raceway and preparation for electrified hardware, access control systems, and security systems.
5. Dimensions and locations of blocking for hardware attachment.
6. Clearances and undercuts.
7. Requirements for veneer matching.

C. Samples: For **factory-finished doors**.

1.3 INFORMATIONAL SUBMITTALS

A. Qualification Data: For door inspector.

1.4 QUALITY ASSURANCE

A. tion: Licensed participant in **AWI's Quality Certification Program**.

PART 2 - PRODUCTS

2.1 PERFORMANCE REQUIREMENTS

A. Fire-Rated Wood Door Assemblies: Assemblies complying with NFPA 80 that are listed and labeled by a qualified testing agency acceptable to authorities having jurisdiction, for fire-protection ratings **and temperature-rise limits** indicated on Drawings, based on testing at positive pressure in accordance with **UL 10C or NFPA 252**.

1. Oversize Fire-Rated Door Assemblies: For units exceeding sizes of tested assemblies, provide certification by a qualified testing agency that doors comply with standard construction requirements for tested and labeled fire-rated door assemblies except for size.
2. Temperature-Rise Limit: **At vertical exit enclosures and exit passageways**, provide doors that have a maximum transmitted temperature end point of not more than 450 deg F (250 deg C) above ambient after 30 minutes of standard fire-test exposure.

B. Smoke- and Draft-Control Door Assemblies: Listed and labeled for smoke and draft control by a qualified testing agency acceptable to authorities having jurisdiction, based on testing in accordance with UL 1784 and installed in compliance with NFPA 105.

2.2 FLUSH WOOD DOORS, GENERAL

A. Quality Standard: In addition to requirements specified, comply with **"Architectural Woodwork Standards.**

2.3 SOLID-CORE, FIVE-PLY FLUSH WOOD VENEER-FACED DOORS FOR TRANSPARENT FINISH

a. to provide blueprint match with wood paneling. Comply with requirements in Section 064216 "Flush Wood Paneling."

2. Exposed Vertical**and Top** Edges: **Same species as faces or a compatible species - Architectural Woodwork Standards edge Type A**.

a. Fire-Rated Single Doors: Provide edge construction with intumescent seals concealed by outer stile. Comply with specified requirements for exposed vertical edges.
b. Fire-Rated Pairs of Doors: Provide formed-steel edges and astragals with intumescent seals.

1) Finish steel edges and astragals with baked enamel[**same color as doors**].

2) Finish steel edges and astragals to match door hardware (locksets or exit devices).

c. Mineral-Core Doors: At hinge stiles, provide laminated-edge construction with improved screw-holding capability and split resistance. Comply with specified requirements for exposed edges.

1) Screw-Holding Capability: **550 lbf (2440 N)** in accordance with WDMA T.M. 10.

3. Core for Non-Fire-Rated Doors:

a. ANSI A208.1, **Grade LD-1** particleboard.

1) Provide doors with **glued-wood-stave** cores instead of particleboard cores for doors scheduled to receive exit devices in **Section 087100 "Door Hardware."**

b. Glued wood stave.
c. WDMA I.S. 10 structural composite lumber.

1) Screw Withdrawal, Face: **550 lbf (2440 N)**.
2) Screw Withdrawal, Edge: **550 lbf (2440 N)**.

d. Either glued wood stave or WDMA I.S. 10 structural composite lumber.

4. Core for Fire-Rated Doors: As required to achieve fire-protection rating indicated on Drawings.

5. Construction: Five plies, hot-pressed bonded (vertical and horizontal edging is bonded to core), with entire unit abrasive planed before veneering.

2.4 FABRICATION

A. Factory fit doors to suit frame-opening sizes indicated.

1. Comply with clearance requirements of referenced quality standard for fitting unless otherwise indicated.
2. Comply with NFPA 80 requirements for fire-rated doors.

B. Factory machine doors for hardware that is not surface applied.

1. Locate hardware to comply with DHI-WDHS-3.
2. Comply with final hardware schedules, door frame Shop Drawings, ANSI/BHMA-156.115-W, and hardware templates.
3. Coordinate with hardware mortises in metal frames, to verify dimensions and alignment before factory machining.
4. For doors scheduled to receive electrified locksets, provide factory-installed raceway and wiring to accommodate specified hardware.

5. Metal Astragals: Factory machine astragals and formed-steel edges for hardware for pairs of fire-rated doors.

C. Openings: Factory cut and trim openings through doors.

1. Light Openings: Trim openings with moldings of material and profile indicated.
2. Glazing: Factory install glazing in doors indicated to be factory finished. Comply with applicable requirements in Section 088000 "Glazing."

2.5 FACTORY FINISHING

A. Comply with referenced quality standard for factory finishing.

1. Complete fabrication, including fitting doors for openings and machining for hardware that is not surface applied, before finishing.
2. Finish faces, all four edges, edges of cutouts, and mortises.
3. Stains and fillers may be omitted on[**top and**] bottom edges, edges of cutouts, and mortises.

B. Factory finish doors.

1. **Architectural Woodwork StandardsANSI/WDMA I.S. 1A** Grade: **Premium**.
2. Finish: ANSI/WDMA I.S. 1A TR-6 Catalyzed Polyurethane.
3. Staining: **As selected by Architect from manufacturer's full range**.
4. Effect: **Open-grain finish**.
5. Sheen: **Satin**.

PART 3 - EXECUTION

3.1 INSTALLATION

A. Hardware: For installation, see **Section 087100 "Door Hardware."."**]

B. Install doors to comply with manufacturer's written instructions and referenced quality standard, and as indicated.

C. Install frames level, plumb, true, and straight.

1. Shim as required with concealed shims. Install level and plumb to a tolerance of 1/8 inch in 96 inches (3.2 mm in 2400 mm).
2. Anchor frames to anchors or blocking built in or directly attached to substrates.

a. Secure with countersunk, concealed fasteners and blind nailing.
b. Use fine finishing nails **or finishing screws** for exposed fastening, countersunk and filled flush with woodwork.

1) For factory-finished items, use filler matching finish of items being installed.

3. Install fire-rated doors and frames in accordance with NFPA 80.
4. Install smoke- and draft-control doors in accordance with NFPA 105.

D. Job-Fitted Doors:

1. Align and fit doors in frames with uniform clearances and bevels as indicated below.

   a. Do not trim stiles and rails in excess of limits set by manufacturer or permitted for fire-rated doors.

2. Machine doors for hardware.
3. Seal edges of doors, edges of cutouts, and mortises after fitting and machining.
4. Clearances:

   a. Provide 1/8 inch (3.2 mm) at heads, jambs, and between pairs of doors.
   b. Provide 1/8 inch (3.2 mm) from bottom of door to top of decorative floor finish or covering unless otherwise indicated on Drawings.
   c. Where threshold is shown or scheduled, provide1/4 inch (6.4 mm) from bottom of door to top of threshold unless otherwise indicated.
   d. Comply with NFPA 80 for fire-rated doors.

5. Bevel non-fire-rated doors 1/8 inch in 2 inches (3-1/2 degrees) at lock and hinge edges.
6. Bevel fire-rated doors 1/8 inch in 2 inches (3-1/2 degrees) at lock edge; trim stiles and rails only to extent permitted by labeling agency.

E. Factory-Fitted Doors: Align in frames for uniform clearance at each edge.

F. Factory-Finished Doors: Restore finish before installation if fitting or machining is required at Project site.

3.2 FIELD QUALITY CONTROL

A. Repair or remove and replace installations where inspections indicate that they do not comply with specified requirements.

B. Reinspect repaired or replaced installations to determine if replaced or repaired door assembly installations comply with specified requirements.

C. Operation: Rehang or replace doors that do not swing or operate freely.

D. Finished Doors: Replace doors that are damaged or that do not comply with requirements. Doors may be repaired or refinished if Work complies with requirements and shows no evidence of repair or refinishing.

END OF SECTION 081416

THIS PAGE LEFT INTENTIONALLY BLANK

SECTION 083113 – ACCESS DOORS AND FRAMES

PART 1 -GENERAL

1.1 SUMMARY

A. Section includes access doors and frames for walls and ceilings.

1.2 ACTION SUBMITTALS

A. Product Data: For each type of product.

B. Samples: For each type of access door and frame and for each finish specified.

C. Product Schedule: For access doors and frames.

1.3 CLOSEOUT SUBMITTALS

A. Record Documents: For fire-rated doors, list of applicable room name and number in which access door is located.

PART 2 - PRODUCTS

2.1 ACCESS DOORS AND FRAMES

A. Flush Access Doors with Exposed Flanges:
1. Larsens
2. Milcor
3. Nystrom

B. Description: Face of door flush with frame, with exposed flange and concealed hinge.
1. Locations: **Wall and ceiling**.
2. Uncoated Steel Sheet for Door: **Nominal 0.060 inch (1.52 mm), 16 gage**, factory **primed**.
3. Frame Material: **Same material, thickness, and finish as door, thickness, and finish**>.
4. Latch and Lock: **Cam latch, screwdriver operated**.

2.2 MATERIALS

A. Steel Plates, Shapes, and Bars: ASTM A36/A36M.

B. Steel Sheet: Uncoated or electrolytic zinc coated, ASTM A879/A879M, with cold-rolled steel sheet substrate complying with ASTM A1008/A1008M, Commercial Steel (CS), exposed.

C. Metallic-Coated Steel Sheet: ASTM A653/A653M, Commercial Steel (CS), Type B; with minimum G60 (Z180) or A60 (ZF180) metallic coating.

D. Frame Anchors: Same material as door face.

E. Inserts, Bolts, and Anchor Fasteners: Hot-dip galvanized steel according to ASTM A153/A153M or ASTM F2329.

2.3 FABRICATION

A. Metal Surfaces: For metal surfaces exposed to view in the completed Work, provide materials with smooth, flat surfaces without blemishes. Do not use materials with exposed pitting, seam marks, roller marks, rolled trade names, or roughness.

B. Doors and Frames: Grind exposed welds smooth and flush with adjacent surfaces. Furnish mounting holes, attachment devices and fasteners of type required to secure access doors to types of supports indicated.

C. Latch and Lock Hardware:

1. Quantity: Furnish number of latches and locks required to hold doors tightly closed.

2.4 FINISHES

A. Painted Finishes: Comply with coating manufacturer's written instructions for cleaning, conversion coating, and applying and baking finish.

1. Factory Primed: Apply manufacturer's standard, lead- and chromate-free, universal primer immediately after surface preparation and pretreatment.

a. Color: match ceiling and wall finish color.

PART 3 - EXECUTION

3.1 INSTALLATION

A. Comply with manufacturer's written instructions for installing access doors and frames.

B. Adjust doors and hardware, after installation, for proper operation.

3.2 FIELD QUALITY CONTROL

END OF SECTION 083113

SECTION 08 33 00

ASHRAE ® 90.1 AND IECC® 2021 COMPLIANT INSULATED ROLLING SERVICE DOOR
Gulf Coast State College - Nursing Simulation Building

PART 1 GENERAL

1.1 SUMMARY

A. **Section Includes:** Manual overhead insulated rolling doors.

B. **Related Sections:**
1. 05 50 00 Metal Fabrications. Door opening jamb and head members.
2. 06 10 00 Rough Carpentry. Door opening jamb and head members.
3. 08 31 00 Access Doors and Panels. Access doors.
4. 08 70 00 Hardware. Padlocks. Masterkeyed cylinder.
5. 09 91 00 Painting. Field painting.
6. Division 26. Electrical wiring and conduit, fuses, disconnect switches, connection of operator to power supply, and installation of control station and wiring.

C. **Products That May Be Supplied, But Are Not Installed Under This Section:**
1. **Control Station**

1.2 SYSTEM DESCRIPTION

A. **Design Requirements:**
1. **Air Infiltration to Comply With:**
a. **ASHRAE®** (American Society of Heating, Refrigeration, and Air-Conditioning Engineers) Standard 90.1-2007, 2010 & 2013 requirements of less than .3 CFM/FT2
b. **IECC®** (International Energy Conservation Code) 2021 requirements of less than 1.0 CFM/FT2

2. **Wind Loading:**
a. Supply doors to withstand up to designed wind load

3. **Cycle Life:**
a. Design doors of standard construction for normal use of up to 20 cycles per day maximum, and an overall maximum of 50,000 operating cycles for the life of the door

4. **Seismic Performance:**
a. Provide manufacturer's seismic calculations confirming ASCE7-10

5. **Insulated Door Slat Material Requirements:**
a. Flame Spread Index of 0 and a Smoke Developed Index of 10 as tested per ASTM E84
b. Sound Transmission Class (STC) rating up to 30 for the entire assembly. If an STC of 32 is desired, additional options are required. All configurations are evaluated per ASTM E90 and based on testing a complete, operable assembly
c. Minimum R-value of 8.0 (U-value of 0.125) as calculated using the ASHRAE Handbook of Fundamentals
d. Insulation to be CFC Free with an Ozone Depletion Potential (ODP) rating of zero

6. **Safety:**
a. Chain operated doors shall be designed so that the door immediately stops upward or downward travel and is maintained in a stationary position when the hand chain is released by user.

1.3 SUBMITTALS

A. Reference Section 01 33 00 Submittal Procedures; submit the following items:

1. **Product Data**

2. **Shop Drawings:** Include special conditions not detailed in Product Data. Show interface with adjacent work.

3. **Quality Assurance/Control Submittals:**
   a. Provide manufacturer ISO 9001:2015 registration
   b. Provide manufacturer and installer qualifications - see below
   c. Provide manufacturer's installation instruction
   d. Provide manufacturer's Health Product Declaration (HPD) for each product
   e. **Manufacturer must provide independent testing lab results proving .3 CFM/FT2 or less air infiltration**

4. **Closeout Submittals:**
   a. Operation and Maintenance Manual
   b. Certificate stating that installed materials comply with this specification

1.4 QUALITY ASSURANCE

A. **Qualifications:**
   1. **Manufacturer Qualifications:** ISO 9001:2015 registered and a minimum of five years experience in producing doors of the type specified

   2. **Installer Qualifications:** Manufacturer's approval

1.5 DELIVERY STORAGE AND HANDLING

A. Reference Section 01 66 00 Product Storage and Handling Requirements

B. Follow manufacturer's instructions

1.6 WARRANTY

A. **Standard Warranty:** Two years from date of shipment against defects in material and workmanship

B. **Maintenance:** Submit for owner's consideration and acceptance of a maintenance service agreement for installed products

PART 2 PRODUCT

2.1 MANUFACTURER

A. **Manufacturer:**
   1. **Cornell:** 24 Elmwood Avenue, Mountain Top, PA 18707.
      Telephone: Meghan Joseph (727) 318-0929
   2. **Cookson**
   3. **Clopay Building Products**

   Substitutions: Not permitted

2.2 PRODUCT INFORMATON

A. **Model:** ESD30

2.3 MATERIALS

A. **Curtain:** Air infiltration rate of less than .3 CFM/FT2, as tested per ASTM E283 validated by an independent testing agency. **Test report required.**
   1. **Fabrication:**
      a. **Slat Material:**

1) **Galvanized Steel/Galvanized Steel:** Manufacturer recommended gauge based on performance requirements. Minimum 24/24 gauge, Grade 40, ASTM A 653 galvanized steel zinc coating

b. **Insulation:** 7/8 inch (22 mm) foamed-in-place, closed cell urethane
c. **Total Slat Thickness:** 15/16 inch (24 mm)
d. **Flame Spread Index** of 0 and a **Smoke Developed Index** of 10 as tested per ASTM E84
e. **R-value**: 8.0
f. **STC Rating:** Sound Transmission Class (STC) rating up to 30 for the entire assembly. If an STC of 32 is desired, additional options are required. All configurations are evaluated per ASTM E90 and based on testing a complete, operable assembly

2. **Exterior Slat Finish:**

a
a. **SpectraShield® Coating System (Color Selected by Architect):**
1) **SpectraShield** color as selected by Architect from manufacturer's color range, more than 180 colors
1) **SpectraShield Ultra** – Ultra Powder Coat to be applied as a protective top coat over SpectraShield finish. Top coat is a polyester based structured wear resistant clear powder coat of 2.5-3.5 mils cured film thickness. ASTM D-3363 pencil hardness: 2H or better. Tested per ASTM B117. Base coating of SpectraShield color as selected by Architect from manufacturer's color range, more than 180 colors.

B. **Endlocks:** Fabricate interlocking sections with high strength galvanized cast iron endlocks on alternate slats each secured with two ¼" (6.35 mm) rivets. Provide windlocks as required to meet specified wind load.

C. **Bottom Bar**

1. **Configuration:**
a. **Insulated Bottom Bar:** Reinforced extruded aluminum interior face with full depth insulation and exterior skin slat to match curtain material and gauge. Minimum 4" tall x 1-1/16" thickness.

2. **Finish:**
a. Match slats

3. **Air Infiltration Certification Label:** Must be affixed to bottom bar

D. **Guides:**
1. **Fabrication:**
a. **Thermal break required.** Minimum 3/16 inch (4.76 mm) [structural steel] angles. Provide windlock bars of same material when windlocks are required to meet specified wind load. Top of inner and outer guide angles to be flared outwards to form bellmouth for smooth entry of curtain into guides. Provide removable guide stoppers to prevent over travel of curtain and bottom bar.Top 16 ½" (419.10 mm) of coil side guide angles to be removable for ease of curtain installation and as needed for future curtain service
2. **Finish:**

a. **SpectraShield® Coating System (Color to match slats):** Zirconium treatment followed by baked-on polyester powder coat, [color as selected by Architect from manufacturer's standard color range, over 180 colors] [custom color as selected by Architect]; minimum 2.5 mils (0.065 mm) cured film thickness; ASTM D-3363 pencil hardness: H or better

E. **Counterbalance Shaft Assembly:**
1. **Barrel:** Steel pipe capable of supporting curtain load with maximum deflection of 0.03 inches per foot (2.5 mm per meter) of width

2. **Spring Balance:** Oil-tempered, heat-treated steel helical torsion spring assembly designed for proper balance of door to ensure that maximum effort to operate will not exceed 25 lbs (110 N). Provide wheel for applying and adjusting spring torque.

F. **Brackets:**
Fabricate from minimum 3/16 inch (5 mm) steel plate with permanently lubricated ball or roller bearings at rotating support points to support counterbalance shaft assembly and form end closures
1. **Finish:**

a. **Match slats**

G. **Hood:**
Minimum 24 gauge galvanized steel reinforced top and bottom edges. Provide minimum 1/4 inch (6.35 mm) steel intermediate support brackets as required to prevent excessive sag.
1. **Finish:**
a. **SpectraShield® Coating System (Color to match slats):**
1) ASTM A 653 galvanized base coating treated with dual process rinsing agents in preparation for chemical bonding, gray baked-on base coat and gray baked-on polyester finish coat
2) Zirconium treatment followed by baked-on polyester powder coat, with [color as selected by Architect from manufacturer's standard color range, over 180 colors] [custom color as selected by Architect]; minimum 2.5 mils (0.065 mm) cured film thickness; ASTM D-3363 pencil hardness: H or better

H. **Weatherstripping:**

1. **Bottom Bar:**
a. **Manually Operated Doors:** Replaceable, bulb-style, compressible EDPM gasket extending into guides
2. **Guides:** Replaceable vinyl strip on guides sealing against both sides of curtain
3. **Lintel Seal:** Double brush seal with EPDM sandwiched between the two brush seals at door header to impede air flow.
4. **Hood:** Neoprene/rayon baffle to impede air flow above coil

2.4 OPERATION

A. **Manual ControlGard Chain Hoist:** Provide chain hoist operator with endless steel chain, chain pocket wheel and guard, geared reduction unit, and chain keeper secured to guide. Chain hoist to include integral brake mechanism that will immediately stop upward or downward travel and maintain the door in a stationary position when the hand chain is released by the user

2.5 ACCESSORIES

A. **Locking:**
1. **Masterkeyable cylinder** operable from coil side of bottom bar, options for all types of operation. Provide interlock switches on Motor operated units.
a. U-Change

D. **Trim Package:** Minimum 16 gauge powder coated steel to match guides

PART 3 EXECUTION

3.1 EXAMINATION

A. Examine substrates upon which work will be installed and verify conditions are in accordance with approved shop drawings
B. Coordinate with responsible entity to perform corrective work on unsatisfactory substrates
C. Commencement of work by installer is acceptance of substrate

3.2 INSTALLATION

A. General: Install door and operating equipment with necessary hardware, anchors, inserts, hangers and supports
B. Follow manufacturer's installation instructions

3.3 ADJUSTING

A. Following completion of installation, including related work by others, lubricate, test, and adjust doors for ease of operation, free from warp, twist, or distortion

3.4 CLEANING

A. Clean surfaces soiled by work as recommended by manufacturer.
B. Remove surplus materials and debris from the site

3.5 DEMONSTRATION

A. Demonstrate proper operation to Owner's Representative
B. Instruct Owner's Representative in maintenance procedures

END OF SECTION

SECTION 084113: ALUMINUM-FRAMED ENTRANCES AND STOREFRONTS

PART 1 GENERAL

1.1 RELATED DOCUMENTS

A. Drawings and general provisions of the Contract, including General and Supplementary Conditions and Division 01 Specification Sections, apply to this Section.

1.2 SUMMARY

A. This Section covers Kawneer Architectural Aluminum Storefront Systems, including perimeter trims, stools, accessories, shims and anchors, and perimeter sealing of storefront units.

B. Types of Kawneer Aluminum Storefront Systems include:

1. IR 521T Framing System Impact Resistant and Blast Mitigation
    a. 2-1/2" x 5" (63.5 mm x 127 mm) nominal dimension
    b. Thermal
    c. Center Plane
    d. 1-5/16" (33.4 mm) impact resistant glazing
    e. Screw Spline Fabrication
    f. Center Plane

C. Related Sections:

1. 072700: Air Barriers
2. 079200: Joint Sealants
3. 084113: Aluminum-Framed Entrances and Storefronts
4. 084413: Glazed Aluminum Curtain Walls
5. 085113: Aluminum Windows
6. 088000: Glazing
7. 107113: Exterior Sun Control Devices

D. For fenestration industry standard terminology and definitions, refer to the Fenestration & Glazing Industry Alliance (FGIA) Glossary (AAMA AG-13).

1.3 PERFORMANCE REQUIREMENTS

A. General Performance:

1. Product to comply with the specified performance requirements without failure due to defective manufacture, fabrication, installation, or other defects in construction, as determined by testing of aluminum storefront systems representing those indicated for this project.

2. Aluminum storefront systems shall withstand movements of supporting structure including, but not limited to, story drift, twist, column shortening, long-term creep, and deflection from uniformly distributed and concentrated live loads.

3. Failure includes any of these events:

   a. Thermal stresses transferring to building structure

   b. Glass breakage

   c. Loosening or weakening of fasteners, attachments, and other components

   d. Failure of operating units

B. Delegated Design:

1. Design aluminum storefront systems, including comprehensive engineering analysis by a qualified professional engineer, using performance requirements and design criteria indicated.

C. Wind Loads: (Basic Wind speed=153.0 mph)

1. The storefront system shall include anchorage that is capable of withstanding the following wind load design pressures:

   a. Inward: 38.24 psf

   b. Outward: -47.87 psf

2. The design pressures are based on the 2023 Florida Building Code Building Code, 8th Edition.

D. Air Leakage:

1. The test specimen shall be tested in accordance with ASTM E 283.

E. Water Resistance:

1. The test specimen shall be tested in accordance with ASTM E 331.

2. There shall be no leakage at a minimum static air pressure differential of 15 psf (720 Pa) as defined in AAMA 501.

F. Uniform Load Structural:

G. Environmental Product Declaration (EPD): Shall have a Type III Product-Specific EPD created from a Product Category Rule.

1.4 SUBMITTALS

A. Product Data:

1. For each type of aluminum-framed storefront system indicated, include:

a. Construction details

b. Material descriptions

c. Dimensions of individual components and profiles

d. Hardware

e. Finishes

f. Installation instructions

B. Shop Drawings:

1. Plans

2. Elevations

3. Sections

4. Details

5. Hardware

6. Attachments to other work

7. Operational clearances

8. Installation details

C. Samples for Initial Selection:

1. Provide samples for units with factory-applied color finishes.

2. Provide samples of hardware and accessories involving color selection.

D. Samples for Verification:

1. Provide a verification sample for aluminum-framed storefront system and required components.

E. Product Test Reports:

1. Provide test reports for each type of aluminum-framed storefront used in the project.

2. Test reports must be based on evaluation of comprehensive tests performed by a qualified preconstruction testing agency.

3. Test reports must indicate compliance with performance requirements.

F. Fabrication Sample:

1. Provide a fabrication sample of each vertical-to-horizontal intersection of aluminum-framed systems, made from 12" (304.8 mm) lengths of full-size components and showing details of the following:

a. Joinery, including concealed welds

b. Anchorage

c. Expansion provisions

d. Glazing

e. Flashing and drainage

G. Supply Chain Sustainability Documentation:

1. Provide EcoVadis certification or equivalent.

2. Provide policy document in place to prevent modern slavery, forced labor, human trafficking, and other forms of labor exploitation in supply chain.

H. Entrance Door Hardware Schedule:

1. Schedule shall be prepared by or under the supervision of supplier.

2. Schedule shall detail fabrication and assembly of entrance door hardware, including procedures and diagrams.

3. Coordinate final entrance door hardware schedule with doors, frames, and related work to ensure proper size, thickness, hand, function, and finish of entrance door hardware.

1.5 QUALITY ASSURANCE

A. Installer Qualifications:

1. Installer must have successfully installed the same or similar units required for the project and other projects of similar size and scope.

B. Manufacturer Qualifications:

1. Manufacturer must be capable of providing aluminum-framed storefront systems that meet or exceed performance the stated performance requirements.

2. Manufacturer must document this performance by the inclusion of test reports and calculations.

C. Source Limitations:

1. Obtain aluminum-framed storefront system through one source from a single manufacturer.

D. Product Options:

1. Drawings indicate size, profiles, and dimensional requirements of aluminum-framed storefront system and are based on the specific system indicated. Refer to Division 01 Product Requirements Section. Do not modify size and dimensional requirements.

2. Do not modify intended aesthetic effects, as judged solely by Architect, except with Architect's approval. If modifications are proposed, submit comprehensive explanatory data to Architect for review.

E. Mockups:

1. Build mockups to verify selections made under sample submittals and to demonstrate aesthetic effects and set quality standards for materials and execution.

2. Build mockups for the type(s) of storefront elevation(s) indicated, in location(s) shown on drawings.

F. Pre-installation Conference:

1. Conduct conference at project site to comply with requirements in Division 01 Project Management and Coordination Section.

G. Structural-Sealant Glazing must comply with ASTM C 1401, “Guide for Structural Sealant Glazing” for design and installation of structural-sealant-glazed systems.

H. Structural-Sealant Joints: Design reviewed and approved by structural-sealant manufacturer.

1.6 PROJECT CONDITIONS

A. Field Measurements:

1. Verify actual dimensions of aluminum-framed storefront openings by field measurements before fabrication.

2. Indicate measurements on shop drawings.

1.7 WARRANTY

A. Submit manufacturer's standard warranty for owner's acceptance.

B. Warranty Period:

1. Two years from Date of Substantial Completion of the project provided however that in no event shall the Limited Warranty begin later than six months from date of shipment by manufacturer.

PART 2 PRODUCTS

2.1 MANUFACTURERS

1. IR 521T Framing System Impact Resistant and Blast Mitigation
    a. 2-1/2" x 5" (63.5 mm x 127 mm) nominal dimension
    b. Thermal
    c. Center Plane
    d. 1-5/16" (33.4 mm) impact resistant glazing
    e. Screw Spline Fabrication

B. Subject to compliance with requirements, provide a comparable product by the following:

1. Manufacturer: Or Equal
2. Refer to Division 01 Substitutions Section for procedures and submission requirements.
3. Pre-Contract (Bidding Period) Substitutions:
    a. Submit written requests ten (10) days prior to bid date.
4. Product Literature and Drawings:
    a. Submit product literature and drawings modified to suit specific project requirements and job conditions.
5. Certificates:
    a. Submit certificate(s) certifying that the substitute manufacturer (1) attests to adherence to specification requirements for storefront system performance criteria, and (2) has been engaged in the design, manufacture, and fabrication of aluminum storefronts for a period of not less than ten (10) years. (*Company Name*)
6. Test Reports:
    a. Submit test reports verifying compliance with each test requirement required by the project.
7. Samples:
    a. Provide samples of typical product sections and finish samples in manufacturer's standard sizes.

C. Substitution Acceptance:

1. Acceptance will be in written form, either as an addendum or modification.

2. Acceptance will be documented by a formal change order signed by the owner and contractor.

2.2 MATERIALS

A. Aluminum Extrusions:

1. Alloy and temper recommended by aluminum storefront manufacturer for strength, corrosion resistance, and application of required finish.

2. Not less than 0.070" (1.8 mm) wall thickness at any location for the main frame

3. Complying with ASTM B221: 6063-T6 alloy and temper

B. Fasteners:

1. Nonmagnetic stainless steel or other materials must be non-corrosive and compatible with aluminum members, trim hardware, anchors, and other components.

C. Anchors, Clips, and Accessories:

1. Aluminum, nonmagnetic stainless steel, or zinc-coated steel or iron complying with ASTM B 633 for SC 3 severe service conditions or other suitable zinc coating.

2. Anchors, clips, and accessories shall provide sufficient strength to withstand the design pressure indicated.

D. Reinforcing Members:

1. Reinforcing members must provide sufficient strength to withstand the design pressure indicated.

E. Sealant:

1. For sealants required within fabricated storefront system, provide permanently elastic, non-shrinking, and non-migrating type recommended by sealant manufacturer for joint size and movement.

F. Tolerances:

1. References to tolerances for wall thickness and other cross-sectional dimensions of storefront members are nominal and in compliance with AA Aluminum Standards and Data.

2.3 STOREFRONT FRAMING SYSTEM

A. Thermal Barrier:

1. IR 521T:

a. Kawneer SINGLE IsoLock™ Thermal Break with one (1) 1/4" (6.4 mm) separation consisting of a two-part chemically curing, high-density polyurethane, which is mechanically and adhesively joined to aluminum storefront sections.

b. Thermal break shall be designed in accordance with AAMA TIR-A8 and tested in accordance with AAMA 505.

B. Fasteners and Accessories:

1. Manufacturer's standard corrosion-resistant, non-staining, non-bleeding fasteners and accessories must be compatible with adjacent materials.

2. Where exposed, fasteners and accessories shall be stainless steel.

C. Perimeter Anchors:

1. When steel anchors are used, provide insulation between steel material and aluminum material to prevent galvanic action.

D. Packing, Shipping, Handling, and Unloading:

1. Deliver materials in manufacturer's original, unopened, undamaged containers with identification labels intact.

E. Storage and Protection:

1. Store materials so that they are protected from exposure to harmful weather conditions.

2. Handle material and components to avoid damage.

3. Protect material against damage from elements, construction activities, and other hazards before, during, and after installation.

2.4 GLAZING SYSTEMS

A. Glazing to meet requirements in Division 08 Glazing Section.

B. Glazing Gaskets:

1. Manufacturer's standard compression types

2. Replaceable, extruded EPDM rubber

C. Spacers and Setting Blocks:

1. Manufacturer's standard elastomeric type

D. Bond-Breaker Tape:

1. Manufacturer's standard TFE-fluorocarbon or polyethylene material to which sealants will not develop adhesion.

E. Glazing Sealants for structural-sealant-glazed systems as recommended by manufacturer for joint type, and as follows:

1. Structural Sealant:

a. ASTM C 1184

b. Single-component neutral-curing silicone formulation that is compatible with the system components with which it comes in contact

c. Specifically formulated and tested for use as structural sealant and approved by a structural-sealant manufacturer for use in the aluminum-framed systems indicated

d. Color: Black

2. Weatherseal sealant:

a. ASTM C 920 for Type S, Grade NS, Class 25, Uses NT, G, A, and O

b. Single-component neutral-curing formulation that is compatible with the structural sealant and other system components with which it comes in contact

c. Recommended by structural-sealant, weatherseal-sealant, and aluminum-framed-system manufacturers for this use

d. Color: Matching structural sealant

2.5 ENTRANCE DOOR SYSTEMS

A. Refer to Entrance Doors as specified in Division 084114 Aluminum-Framed Entrances and Storefronts Section.

B. Refer to Entrance Door Hardware as specified in Division 084114 Door Hardware Section.

2.6 ACCESSORY MATERIALS

A. Versoleil® SunShade:

1. Anchors shall be painted:

a. Select from Kawneer’s standard paints and colors. Custom colors are available upon request.

2. Louvers and fascia shall be painted or anodized:

a. Painted: Select from Kawneer’s standard paints and colors. Custom colors are available upon request.

b. Anodized: Select from Kawneer's anodized finishes.

B. Joint Sealants:

1. For installation at perimeter of aluminum-framed systems, as specified in Division 07 Joint Sealants Section.

C. Bituminous Paint:

1. Cold-applied asphalt-mastic paint
2. Complies with SSPC-Paint 12 requirements except containing no asbestos
3. Formulated for 30-mil (0.762 mm) thickness per coat

2.7 FABRICATION

A. Fabricate framing member components that, when assembled, have the following characteristics:

1. Profiles that are sharp, straight, and free of defects or deformations
2. Accurately fitted joints that are flush, hairline, and weatherproof
3. Means to drain water passing joints, condensation within framing members, and moisture migrating within the system to exterior
4. Physical and thermal isolation of glazing from framing members
5. Accommodations for thermal and mechanical movements of glazing and framing that maintain required glazing edge clearances
6. Provisions for field replacement of glazing
7. Fasteners, anchors, and connection devices that are concealed from view to the greatest extent possible

B. Mechanically Glazed Framing Members:

1. Fabricate for flush glazing without projecting stops.

C. Structural-Sealant-Glazed Framing Members:

1. Include accommodations for using temporary support device to retain glazing in place while structural sealant cures.

D. Storefront Framing:

1. Fabricate components for assembly using manufacturer's standard installation instructions.

E. After fabrication, clearly mark components to identify their locations in project according to shop drawings.

2.8 ALUMINUM FINISHES

A. Finish designations that are prefixed by AA comply with the system established by the Aluminum Association for designating aluminum finishes.

B. Factory Finishing:

1. Kawneer Permanodic® AA-M10C21A31, AAMA 611, Architectural Class II Clear Anodic Coating (Color #14 Clear) (Standard)

PART 3 EXECUTION

3.1 EXAMINATION

A. With installer present, examine openings, substrates, structural support, anchorage, and conditions for compliance with requirements for installation tolerances and other conditions affecting performance of work:

1. Verify rough opening dimensions.

2. Verify levelness of sill plate.

3. Verify operational clearances.

4. Examine wall flashings, vapor retarders, water and weather barriers, and other built-in components for proper water management.

5. Masonry Surfaces:

a. Masonry surfaces must be visibly dry and free of excess mortar, sand, and other construction debris.

6. Wood Frame Walls:

a. Wood frame walls must be dry, clean, sound, well nailed, free of voids, and without offsets at joints.

b. Ensure that nail heads are driven flush with surfaces in opening and within 3" (76.2 mm) of opening.

7. Metal Surfaces:

a. Metal surfaces must be dry and clean (free of grease, oil, dirt, rust, corrosion, and welding slag).

b. Ensure that metal surfaces are without sharp edges or offsets at joints.

B. Proceed with installation only after correcting unsatisfactory conditions.

3.2 INSTALLATION

A. Comply with Drawings, Shop Drawings, and manufacturer's written instructions for installing aluminum-framed storefront system, accessories, and other components.

B. Install aluminum-framed storefront system so that components:

1. Are level, plumb, square, and true to line
2. Are without distortion and do not impede thermal movement
3. Are anchored securely in place to structural support
4. Are in proper relation to wall flashing and other adjacent construction

C. Set sill members in bed of sealant or with gaskets, as indicated, for weather-tight construction.

D. Install aluminum-framed storefront system and components to drain condensation, water penetrating joints, and moisture migrating within aluminum-framed storefront system to the exterior.

E. Separate aluminum and other corrodible surfaces from sources of corrosion or electrolytic action at points of contact with other materials.

3.3 FIELD QUALITY CONTROL

A. Field Tests:

1. Architect shall select storefront units to be tested as soon as a representative portion of the project has been installed, glazed, perimeter caulked and cured.
2. Conduct tests for air infiltration and water penetration with manufacturer’s representative present.
3. Tests that do not meet the specified performance requirements and units that have deficiencies shall be corrected as part of the contract amount.
4. Testing shall be performed per AAMA 503 by a qualified independent testing agency. Refer to Testing Section for payment of testing and testing requirements.
5. Air Infiltration Tests:
    a. Conduct tests in accordance with ASTM E 783.
    b. Allowable air infiltration shall not exceed 1.5 times the amount indicated in the performance requirements or 0.09 cfm/ft^2, whichever is greater.
6. Water Infiltration Tests:
    a. Conduct tests in accordance with ASTM E 1105.
    b. No uncontrolled water leakage is permitted when tested at a static test pressure of two-thirds the specified water penetration pressure but not less than 6.2 psf (300 Pa).

B. Manufacturer's Field Services:

1. Upon owner’s written request, provide periodic site visit by manufacturer’s field service representative.

3.4 ADJUSTING, CLEANING, AND PROTECTION

A. Adjusting: Not applicable.

B. Protection:

1. Protect installed product’s finish surfaces from damage during construction.

C. Cleaning:

1. Clean glass immediately after installation.

   a. Comply with glass manufacturer's written recommendations for final cleaning and maintenance.

   b. Remove non-permanent labels and clean surfaces.

2. Clean aluminum surfaces.

3. Avoid damaging protective coatings and finishes.

4. Remove excess sealants, glazing materials, dirt, and other substances.

5. Repair or replace damaged installed products.

6. Remove and replace glass that has been broken, chipped, cracked, abraded, or damaged during the construction period.

7. Remove construction debris from project site and legally dispose of debris.

END OF SECTION 084113

THIS PAGE INTENTIONALLY LEFT BLANK

SECTION 084114: ALUMINUM-FRAMED ENTRANCES

PART 1 GENERAL

1.1 RELATED DOCUMENTS

A. Drawings and general provisions of the Contract, including General and Supplementary Conditions and Division 01 Specification Sections, apply to this Section.

1.2 SUMMARY

A. This Section covers Kawneer Aluminum Entrances, including glass and glazing, door hardware, and components.

B. Types of Kawneer Aluminum Entrances include:
1. 500 IR Swing Door:
    a. Wide stile
    b. Vertical face dimension: 5" (127.0 mm)
    c. Depth: 1-3/4" (44.5 mm)
    d. High-traffic applications

C. Related Sections:
1. 072700: Air Barriers
2. 079200: Joint Sealants
3. 084313: Aluminum-Framed Storefronts
4. 084413: Glazed Aluminum Curtain Walls
5. 085113: Aluminum Windows
6. 087000: Hardware
7. 088000: Glazing
8. 280000: Electronic Safety and Security

1.3 DEFINITIONS

A. For fenestration industry standard terminology and definitions, refer to the Fenestration & Glazing Industry Alliance (FGIA) Glossary (AAMA AG-13).

1.4 PERFORMANCE REQUIREMENTS

A. General Performance:
1. Aluminum-framed entrance system shall withstand the effects of the following performance requirements without failure due to defective manufacture, fabrication, installation, or other defects in construction.

B. Wind Loads:

1. The entrance system shall include anchorage that is capable of withstanding the following wind load design pressures:
   a. Inward: 38.24 psf
   b. Outward: -47.87 psf
2. The design pressures are based on the 2023 Building Code, 8th Edition.

C. Air Leakage:
1. For single-acting offset pivot or butt-hung entrances in the closed and locked position, the test specimen shall be tested in accordance with ASTM E 283 at a pressure differential of 1.57 psf (75 Pa) for single doors and pairs of doors.
2. A single 3'0" x 7'0" (915 mm x 2134 mm) entrance door and frame shall not exceed 1.0 cfm/ft^2.
3. A pair of 6'0" x 7'0" (1830 mm x 2134 mm) entrance doors and frame shall not exceed 1.0 cfm/ft^2.

Water Resistance:

4. For single-acting offset pivot or butt-hung entrances in the closed and locked position, the test specimen shall be tested in accordance with TAS-202 of the Florida Building Code. There shall be no water infiltration when tested to a pressure differential of 10 psf (479 Pa) for single doors and for pairs of doors.

D. Uniform Load Structural:
1. A static air design load of 85 psf (4070 Pa), or 65 psf (3113 Pa) for laminated infill, shall be applied in the positive and negative direction in accordance with Florida Building Code TAS-202 and ASTM E 330.
2. There shall be no deflection in excess of L/180 of the span of any framing member at design load.
3. At a structural test load equal to 1.5 times the specified design load, no glass breakage shall occur.

E. Structural-Test Performance:
1. Corner strength shall be tested per the Kawneer dual moment load test procedure and certified by an independent testing laboratory to ensure weld compliance and corner integrity. (Testing procedure and certified test results are available upon request.)

F. Windborne-Debris-Impact Resistance Performance:
1. Performance shall be tested in accordance with ASTM E1886 and information in ASTM E1996, and in TAS-201/203:
   a. Large-Missile Impact: For aluminum-framed systems located within 30 feet (9.1 m) of grade
   b. Small-Missile Impact: For aluminum-framed systems located above 30 feet (9.1 m) of grade

G. Forced Entry:
1. Performance shall be tested in accordance with AAMA 1304.

H. Environmental Product Declaration (EPD): Shall have an Aluminum Extrusions EPD.

1.5 SUBMITTALS

A. Product Data:
   1. For each type of aluminum-framed entrance door indicated, include:
      a. Construction details
      b. Material descriptions
      c. Fabrication methods
      d. Dimensions of individual components and profiles
      e. Hardware
      f. Finishes
      g. Installation instructions

B. Shop Drawings:
   1. Plans
   2. Elevations
   3. Sections
   4. Details
   5. Hardware
   6. Attachments to other work
   7. Operational clearances
   8. Installation details

C. Samples for Initial Selection:
   1. Provide samples for units with factory-applied color finishes.
   2. Provide samples of hardware and accessories involving color selection.

D. Samples for Verification:
   1. Provide a verification sample for aluminum-framed entrance doors and required components.

E. Product Test Reports:
   1. Provide test reports for each type of aluminum-framed entrance door used in the project.
   2. Test reports must be based on evaluation of comprehensive tests performed by a qualified preconstruction testing agency.
   3. Test reports must indicate compliance with performance requirements.

F. Fabrication Sample:
   1. Provide a fabrication sample of a corner, consisting of a door stile and rail and using full-size components that show details of the following:
      a. Glazing

G. Supply Chain Sustainability Documentation:
   1. Provide EcoVadis certification or equivalent.
   2. Provide policy document in place to prevent modern slavery, forced labor, human trafficking, and other forms of labor exploitation in supply chain.

H. Entrance Door Hardware Schedule:
   1. Schedule shall be prepared by or under the supervision of supplier.
   2. Schedule shall detail fabrication and assembly of entrance door hardware, including procedures and diagrams.
   3. Coordinate final entrance door hardware schedule with doors, frames, and related work to ensure proper size, thickness, hand, function, and finish of entrance door hardware.

1.6 QUALITY ASSURANCE

A. Installer Qualifications:
   1. Installer must have successfully installed the same or similar units required for the project and other projects of similar size and scope.

B. Manufacturer Qualifications:
   1. Manufacturer must be capable of fabricating aluminum-framed entrance doors and storefronts that meet or exceed the stated performance requirements.
   2. Manufacturer must document this performance by the inclusion of test reports and calculations.

C. Source Limitations:
   1. Obtain aluminum-framed entrance doors through one source from a single manufacturer.

D. Product Options:
   1. Drawings indicate size, profiles, and dimensional requirements of aluminum-framed entrance doors and are based on the specific system indicated. Refer to Division 01 Product Requirements Section. Do not modify size and dimensional requirements.
   2. Do not modify intended aesthetic effects, as judged solely by Architect, except with Architect's approval. If modifications are proposed, submit comprehensive explanatory data to Architect for review.

E. Mockups:
   1. Build mockups to verify selections made under sample submittals and to demonstrate aesthetic effects and set quality standards for materials and execution.
   2. Build mockup for the type(s) of swing entrance door(s) indicated, in location(s) shown on drawings.

F. Pre-installation Conference:
   1. Conduct conference at project site to comply with requirements in Division 01 Project Management and Coordination Section.

1.7 PROJECT CONDITIONS

A. Field Measurements:
   1. Verify actual dimensions of aluminum-framed entrance door openings by field measurements before fabrication.
   2. Indicate measurements on shop drawings.

1.8 WARRANTY

A. Submit manufacturer's standard warranty for owner's acceptance.

B. Warranty Period:
   1. Two years from Date of Substantial Completion of the project provided however that in no event shall the Limited Warranty begin later than six months from date of shipment by manufacturer.

PART 2 PRODUCTS

2.1 MANUFACTURERS

A. Basis-of-Design Product:
   1. Kawneer Company, Inc.
   2. The door stile and rail face dimensions of the 500IR entrance door will be as follows:
      a. 500 IR Swing Door:
         1) Vertical face dimension: 5" (127.0 mm)
         2) Top Rail: 5" (127.0 mm)
         3) Bottom Rail: 6-1/2" (165.1 mm)
         4) Optional Bottom Rail: 10" (254.0 mm)
   3. Major portions of the door members shall be 0.125" (3.2 mm) nominal thickness.
   4. Glazing molding shall be 0.05" (1.3 mm) thick.
   5. Glazing gaskets shall be either EPDM elastomeric extrusions or a thermoplastic elastomer.
   6. Structural silicone sealant shall be Dow Corning 983, 995 or Tremco Proglaze SSG.

B. Subject to compliance with requirements, provide a comparable product by the following:
   1. Manufacturer: Or Equal

C. Substitutions:
   1. Refer to Division 01 Substitutions Section for procedures and submission requirements.
   2. Pre-Contract (Bidding Period) Substitutions:
      a. Submit written requests ten (10) days prior to bid date.
   3. Product Literature and Drawings:
      a. Submit product literature and drawings modified to suit specific project requirements and job conditions.
   4. Certificates:
      a. Submit certificate(s) certifying that the substitute manufacturer (1) attests to adherence to specification requirements for storefront system performance criteria, and (2) has been engaged in the design, manufacture, and fabrication of aluminum-framed entrance doors for a period of not less than ten (10) years. (*Company Name*)
   5. Test Reports:
      a. Submit test reports verifying compliance with each test requirement required by the project.

6. Samples:
   a. Provide samples of typical product sections and finish samples in manufacturer's standard sizes.

D. Substitution Acceptance:
1. Acceptance will be in written form, either as an addendum or modification.
2. Acceptance will be documented by a formal change order signed by the owner and contractor.

2.2 MATERIALS

A. Aluminum Extrusions:
1. Alloy and temper recommended by aluminum-framed entrance door manufacturer for strength, corrosion resistance, and application of required finish.
2. Not less than 0.090" (2.3 mm) wall thickness at any location for the main frame and door leaf members.

B. Fasteners:
1. Nonmagnetic stainless steel or other materials must be non-corrosive and compatible with aluminum members, trim hardware, anchors, and other components.

C. Anchors, Clips, and Accessories:
1. Aluminum, nonmagnetic stainless steel, or zinc-coated steel or iron complying with ASTM B 633 for SC 3 severe service conditions or other suitable zinc coating.
2. Anchors, clips, and accessories shall provide sufficient strength to withstand the design pressure indicated.

D. Reinforcing Members:
1. Aluminum, nonmagnetic stainless steel, or nickel/chrome-plated steel complying with ASTM B 456 for Type SC 3 severe service conditions, or zinc-coated steel or iron complying with ASTM B 633 for SC 3 severe service conditions or other suitable zinc coating.
2. Reinforcing members must provide sufficient strength to withstand the design pressure indicated.

E. Weather Seals:
1. Provide weather stripping with integral barrier fin or fins of semi-rigid, polypropylene sheet or polypropylene-coated material.
2. Comply with AAMA 701/702.

2.3 STOREFRONT ENTRANCE FRAMING SYSTEM

A. Storefront Entrance Framing:
1. IR500/501

B. Non-Brackets and Reinforcements:
1. Manufacturer's standard high-strength aluminum with non-staining, non-ferrous shims for aligning system components.

C. Fasteners and Accessories:
   1. Manufacturer's standard corrosion-resistant, non-staining, non-bleeding fasteners and accessories must be compatible with adjacent materials.
   2. Where exposed, fasteners and accessories shall be stainless steel.

D. Perimeter Anchors:
   1. When steel anchors are used, provide insulation between steel material and aluminum material to prevent galvanic action.

E. Packing, Shipping, Handling, and Unloading:
   1. Deliver materials in manufacturer's original, unopened, undamaged containers with identification labels intact.

F. Storage and Protection:
   1. Store materials so that they are protected from exposure to harmful weather conditions.
   2. Handle material and components to avoid damage.
   3. Protect material against damage from elements, construction activities, and other hazards before, during, and after installation.

2.4 GLAZING

A. Glazing shall comply with requirements in Division 08 Glazing Section.

B. Glass:
   1. 9/16" laminated infill with .090" (2.3 mm) PVB interlayer

C. Glazing Gaskets:
   1. Manufacturer's standard compression types
   2. Replaceable, extruded EPDM rubber

D. Spacers and Setting Blocks:
   1. Manufacturer's standard elastomeric type

2.5 HARDWARE

A. General Hardware Requirements: (Refer to Section 08 71 00 Door Hardware) **Hardware set #1** (Doors 100A), **Hardware set #2** (Doors 100F, 102A) , **Hardware Set # 42** (Doors 100)

2.6 FABRICATION

A. Fabricate aluminum-framed entrance doors in sizes indicated.

B. Include a complete system for assembling components and anchoring doors.

C. Fabrication requirements:
   1. Aluminum-framed glass doors shall be reglazable without dismantling perimeter framing.
   2. Door corner construction:

a. Mechanical clip fastening
b. SIGMA deep-penetration plug welds
c. 1-1/8" (28.6 mm) long fillet welds inside and outside of all four corners
d. Hook-in type glazing stops with EPDM glazing gaskets reinforced with non-stretchable cord

3. Joint construction:
   a. Accurately fit and secure joints and corners.
   b. Make joints hairline in appearance.
4. Prepare components with internal reinforcement for door hardware.
5. Arrange fasteners and attachments to conceal from view.

D. Weather-stripping:
1. Provide weather-stripping locked into extruded grooves in door panels or frames as indicated on manufacturer's drawings and details.

2.7 ALUMINUM FINISHES

A. Finish designations that are prefixed by AA comply with the system established by the Aluminum Association for designating aluminum finishes.

B. Factory Finishing:
1. Kawneer Permanodic® AA-M10C21A41, AAMA 611, Architectural Class I Clear Anodic Coating (Color #14 Clear) (Optional)

PART 3 EXECUTION

3.1 EXAMINATION

A. With installer present, examine openings, substrates, structural support, anchorage, and conditions for compliance with requirements for installation tolerances and other conditions affecting performance of work:
1. Verify rough opening dimensions.
2. Verify levelness of sill plate.
3. Verify operational clearances.
4. Examine wall flashings, vapor retarders, water and weather barriers, and other built-in components for proper water management.
5. Masonry Surfaces:
   a. Masonry surfaces must be visibly dry and free of excess mortar, sand, and other construction debris.
6. Wood Frame Walls:
   a. Wood frame walls must be dry, clean, sound, well nailed, free of voids, and without offsets at joints.
   b. Ensure that nail heads are driven flush with surfaces in opening and within 3" (76.2 mm) of opening.
7. Metal Surfaces:

a. Metal surfaces must be dry and clean (free of grease, oil, dirt, rust, corrosion, and welding slag).
b. Ensure that metal surfaces are without sharp edges or offsets at joints.

B. Proceed with installation only after correcting unsatisfactory conditions.

3.2 INSTALLATION

A. Comply with drawings, shop drawings, and manufacturer's written instructions for installing aluminum-framed entrance doors, hardware, accessories, and other components.

B. Install aluminum-framed entrance doors so that the doors:
1. Are level, plumb, square, and true to line
2. Are without distortion and do not impede thermal movement
3. Are anchored securely in place to structural support
4. Are in proper relation to wall flashing and other adjacent construction

C. Set the sill threshold in a bed of sealant, as indicated, for weathertight construction.

D. Separate aluminum and other corrodible surfaces from sources of corrosion or electrolytic action at points of contact with other materials.

3.3 FIELD QUALITY CONTROL

A. Manufacturer's Field Services:
1. Upon owner’s written request, provide periodic site visit by manufacturer’s field service representative.

3.4 ADJUSTING, CLEANING, AND PROTECTION

A. Adjusting: Not applicable.

B. Cleaning:
1. Avoid damaging protective coatings and finishes.
2. Clean glass and aluminum surfaces of product immediately after installation.
3. Comply with glass manufacturer's written recommendations for final cleaning and maintenance.
4. Remove non-permanent labels and clean surfaces.
5. Remove excess sealants, glazing materials, dirt, and other substances.
6. Remove and replace glass that has been broken, chipped, cracked, abraded, or damaged during the construction period.
7. Remove construction debris from project site and legally dispose of debris.

C. Protection:
1. Protect installed product’s finish surfaces from damage during construction.

END OF SECTION 084113

SECTION 084115: ALUMINUM-FRAMED ENTRANCES AND STOREFRONTS (TRI-FAB 451)

This suggested guide specification has been developed using the current edition of the Construction Specifications Institute (CSI) “Manual of Practice,” including the recommendations for the CSI three-part Section Format and the CSI Page Format. Additionally, the development concept and organizational arrangement of the American Institute of Architects (AIA) MasterSpec® Program has been recognized in the preparation of this guide specification. Neither CSI, AIA, USGBC, nor ILFI endorse specific manufacturers and products. The preparation of the guide specification assumes the use of standard contract documents and forms, including the “Conditions of the Contract,” published by the AIA.

PART 1 GENERAL

1.1 RELATED DOCUMENTS

A. Drawings and general provisions of the Contract, including General and Supplementary Conditions and Division 01 Specification Sections, apply to this Section.

1.2 SUMMARY

A. This Section covers Kawneer Architectural Aluminum Storefront Systems, including perimeter trims, stools, accessories, shims and anchors, and perimeter sealing of storefront units.

B. Types of Kawneer Aluminum Storefront Systems include:
   1. Trifab® VersaGlaze® 451 Framing System
      a. 2" x 4-1/2" (50.8 mm x 114.3 mm) nominal dimension
      b. Non-thermal
      c. Center set, structural silicone or weatherseal (type B) glazed
      d. Screw spline, shear block, stick, or punched opening

C. Related Sections:
   1. 072700: Air Barriers
   2. 079200: Joint Sealants
   3. 083213: Sliding Aluminum-Framed Glass Doors
   4. 084113: Aluminum-Framed Entrances and Storefronts
   5. 084413: Glazed Aluminum Curtain Walls
   6. 085113: Aluminum Windows
   7. 088000: Glazing
   8. 107113: Exterior Sun Control Devices
   9. 122600: Interior Daylighting Devices

1.3 DEFINITIONS

A. For fenestration industry standard terminology and definitions, refer to the Fenestration & Glazing Industry Alliance (FGIA) Glossary (AAMA AG-13).

1.4 PERFORMANCE REQUIREMENTS

A. General Performance:

1. Product to comply with the specified performance requirements without failure due to defective manufacture, fabrication, installation, or other defects in construction, as determined by testing of aluminum storefront systems representing those indicated for this project.
2. Aluminum storefront systems shall withstand movements of supporting structure including, but not limited to, story drift, twist, column shortening, long-term creep, and deflection from uniformly distributed and concentrated live loads.
3. Failure includes any of these events:
    a. Thermal stresses transferring to building structure
    b. Glass breakage
    c. Loosening or weakening of fasteners, attachments, and other components
    d. Failure of operating units

B. Delegated Design:
1. Design aluminum storefront systems, including comprehensive engineering analysis by a qualified professional engineer, using performance requirements and design criteria indicated.

C. Wind Loads: Interior Application

D. Air Leakage:
1. The test specimen shall be tested in accordance with ASTM E 283.
2. With interior seal, air leakage rate shall not exceed 0.06 cfm/ft^2 (0.3 l/s · m^2) at a static air pressure differential of 6.2 psf (300 Pa).
3. Without interior seal, air leakage rate shall not exceed 0.06 cfm/ft^2 (0.3 l/s · m^2) at a static air pressure differential of 1.6 psf (75 Pa).
4. CSA A440 Fixed Rating

E. Water Resistance:
1. The test specimen shall be tested in accordance with ASTM E 331.
2. There shall be no leakage at a minimum static air pressure differential of:
    a. 8 psf (383 Pa) as defined in AAMA 501.
    b. 10 psf (479 Pa) as defined in AAMA 501 with VersaGlaze® HP Sill Flashing.
    c. 8 psf (383 Pa) as defined in AAMA 501 with optional Air/Vapor Barrier Tie-in.

F. Uniform Load Structural:
1. A static air design load of 35 psf (1680 Pa) shall be applied in the positive and negative direction in accordance with ASTM E 330.
2. There shall be no deflection in excess of L/175 of the span of any framing member.
3. At a structural test load equal to 1.5 times the specified design load, no glass breakage or permanent set in the framing members in excess of 0.2% of their clear spans shall occur.

G. Seismic:
1. When tested to AAMA 501.4, system must meet design displacement (elastic) of 0.010 times the story height and ultimate displacement (inelastic) of 1.5 times the design displacement.

H. Thermal Movements:
1. Allow for thermal movements resulting from the following:

a. 0°F (-18 C) to 180°F (82 C) maximum change (range) in ambient and surface temperatures
b. 75°F (24 C) test interior ambient air temperature

2. Test performance shows no buckling; stress on glass; sealant failure; excess stress on framing, anchors, and fasteners; or reduction of performance when tested according to AAMA 501.5 for a minimum 3 cycles.

I. Sound Transmission Class (STC) and Outdoor-Indoor Transmission Class (OITC):

1. Sound transmission loss test results in accordance with AAMA 1801 are based upon 1" (25.4 mm) clear double laminated insulating glass with PVB interlayer (1/8", 0.030", 1/8", 1/2" AS, 1/8", 0.030", 1/8").
2. The glass to exterior ratings, when tested to ASTM E1425 and ASTM E90, shall not be less than STC 38 and OITC 31.
3. The glass to center ratings, when tested to ASTM E1425 and ASTM E90, shall not be less than STC 37 and OITC 30.
4. The glass to interior ratings, when tested to ASTM E1425 and ASTM E90, shall not be less than STC 38 and OITC 30.

J. Material Ingredient Reporting:

1. Shall have a complete list of chemical ingredients to at least 100 ppm (0.01%) that covers 100% of the product.
2. Acceptable documentation includes:
   a. Manufacturer's inventory with Chemical Abstract Service Registration Number (CASRN or CAS#):
      1) Kawneer's Material Transparency Summary (MTS)

1.5 SUBMITTALS

A. Product Data:

1. For each type of aluminum-framed storefront system indicated, include:
   a. Construction details
   b. Material descriptions
   c. Dimensions of individual components and profiles
   d. Hardware
   e. Finishes
   f. Installation instructions

B. Shop Drawings:

1. Plans
2. Elevations
3. Sections
4. Details
5. Hardware
6. Attachments to other work
7. Operational clearances

8. Installation details

C. Samples for Initial Selection:
1. Provide samples for units with factory-applied color finishes.
2. Provide samples of hardware and accessories involving color selection.

D. Samples for Verification:
1. Provide a verification sample for aluminum-framed storefront system and required components.

E. Product Test Reports:
1. Provide test reports for each type of aluminum-framed storefront used in the project.
2. Test reports must be based on evaluation of comprehensive tests performed by a qualified preconstruction testing agency.
3. Test reports must indicate compliance with performance requirements.

F. Fabrication Sample:
1. Provide a fabrication sample of each vertical-to-horizontal intersection of aluminum-framed systems, made from 12" (304.8 mm) lengths of full-size components and showing details of the following:
a. Joinery, including concealed welds
b. Anchorage
c. Expansion provisions
d. Glazing
e. Flashing and drainage

G. Supply Chain Sustainability Documentation:
1. Provide EcoVadis certification or equivalent.
2. Provide policy document in place to prevent modern slavery, forced labor, human trafficking, and other forms of labor exploitation in supply chain.

H. Entrance Door Hardware Schedule:
1. Schedule shall be prepared by or under the supervision of supplier.
2. Schedule shall detail fabrication and assembly of entrance door hardware, including procedures and diagrams.
3. Coordinate final entrance door hardware schedule with doors, frames, and related work to ensure proper size, thickness, hand, function, and finish of entrance door hardware.

1.6 QUALITY ASSURANCE

A. Installer Qualifications:
1. Installer must have successfully installed the same or similar units required for the project and other projects of similar size and scope.

B. Manufacturer Qualifications:
1. Manufacturer must be capable of providing aluminum-framed storefront systems that meet or exceed performance the stated performance requirements.

2. Manufacturer must document this performance by the inclusion of test reports and calculations.

C. Source Limitations:
1. Obtain aluminum-framed storefront system through one source from a single manufacturer.

D. Product Options:
1. Drawings indicate size, profiles, and dimensional requirements of aluminum-framed storefront system and are based on the specific system indicated. Refer to Division 01 Product Requirements Section. Do not modify size and dimensional requirements.
2. Do not modify intended aesthetic effects, as judged solely by Architect, except with Architect's approval. If modifications are proposed, submit comprehensive explanatory data to Architect for review.

E. Mockups:
1. Build mockups to verify selections made under sample submittals and to demonstrate aesthetic effects and set quality standards for materials and execution.
2. Build mockups for the type(s) of storefront elevation(s) indicated, in location(s) shown on drawings.

F. Pre-installation Conference:
1. Conduct conference at project site to comply with requirements in Division 01 Project Management and Coordination Section.

G. Structural-Sealant Glazing must comply with ASTM C 1401, “Guide for Structural Sealant Glazing” for design and installation of structural-sealant-glazed systems.

H. Structural-Sealant Joints: Design reviewed and approved by structural-sealant manufacturer.

1.7 PROJECT CONDITIONS

A. Field Measurements:
1. Verify actual dimensions of aluminum-framed storefront openings by field measurements before fabrication.
2. Indicate measurements on shop drawings.

1.8 WARRANTY

A. Submit manufacturer's standard warranty for owner's acceptance.

B. Warranty Period:
1. Two years from Date of Substantial Completion of the project provided however that in no event shall the Limited Warranty begin later than six months from date of shipment by manufacturer.

PART 2 PRODUCTS

2.1 MANUFACTURERS

A. Basis-of-Design Product:

1. Kawneer Company, Inc.
2. Trifab® VersaGlaze® 451 Framing System
   a. 2" x 4-1/2" (50.8 mm x 114.3 mm) nominal dimension
   b. Non-thermal
   c. Front, center, back, multi-plane, structural silicone or weatherseal (type B) glazed
   d. Screw spline, shear block, stick, or punched opening

2.2 MATERIALS

A. Aluminum Extrusions:
   1. Alloy and temper recommended by aluminum storefront manufacturer for strength, corrosion resistance, and application of required finish.
   2. Not less than 0.070" (1.8 mm) wall thickness at any location for the main frame
   3. Complying with ASTM B221: 6063-T6 alloy and temper

B. Fasteners:
   1. Nonmagnetic stainless steel or other materials must be non-corrosive and compatible with aluminum members, trim hardware, anchors, and other components.

C. Anchors, Clips, and Accessories:
   1. Aluminum, nonmagnetic stainless steel, or zinc-coated steel or iron complying with ASTM B 633 for SC 3 severe service conditions or other suitable zinc coating.
   2. Anchors, clips, and accessories shall provide sufficient strength to withstand the design pressure indicated.

D. Reinforcing Members:
   1. Aluminum, nonmagnetic stainless steel, or nickel/chrome-plated steel complying with ASTM B 456 for Type SC 3 severe service conditions, or zinc-coated steel or iron complying with ASTM B 633 for SC 3 severe service conditions or other suitable zinc coating.

E. Sealant:
   1. For sealants required within fabricated storefront system, provide permanently elastic, non-shrinking, and non-migrating type recommended by sealant manufacturer for joint size and movement.

F. Tolerances:
   1. References to tolerances for wall thickness and other cross-sectional dimensions of storefront members are nominal and in compliance with AA Aluminum Standards and Data.

2.3 STOREFRONT FRAMING SYSTEM

A. Brackets and Reinforcements:
   1. Manufacturer's standard high-strength aluminum with non-staining, non-ferrous shims for aligning system components.

B. Fasteners and Accessories:
   1. Manufacturer's standard corrosion-resistant, non-staining, non-bleeding fasteners and accessories must be compatible with adjacent materials.

2. Where exposed, fasteners and accessories shall be stainless steel.

C. Perimeter Anchors:
1. When steel anchors are used, provide insulation between steel material and aluminum material to prevent galvanic action.

D. Packing, Shipping, Handling, and Unloading:
1. Deliver materials in manufacturer's original, unopened, undamaged containers with identification labels intact.

E. Storage and Protection:
1. Store materials so that they are protected from exposure to harmful weather conditions.
2. Handle material and components to avoid damage.
3. Protect material against damage from elements, construction activities, and other hazards before, during, and after installation.

2.4 GLAZING SYSTEMS

A. Glazing to meet requirements in Division 08 Glazing Section.

B. Glazing Gaskets:
1. Manufacturer's standard compression types
2. Replaceable, extruded EPDM rubber

C. Spacers and Setting Blocks:
1. Manufacturer's standard elastomeric type

D. Bond-Breaker Tape:
1. Manufacturer's standard TFE-fluorocarbon or polyethylene material to which sealants will not develop adhesion.

E. Glazing Sealants for structural-sealant-glazed systems as recommended by manufacturer for joint type, and as follows:
1. Structural Sealant:
   a. ASTM C 1184
   b. Single-component neutral-curing silicone formulation that is compatible with the system components with which it comes in contact
   c. Specifically formulated and tested for use as structural sealant and approved by a structural-sealant manufacturer for use in the aluminum-framed systems indicated
   d. Color: Black
2. Weatherseal sealant:
   a. ASTM C 920 for Type S, Grade NS, Class 25, Uses NT, G, A, and O
   b. Single-component neutral-curing formulation that is compatible with the structural sealant and other system components with which it comes in contact
   c. Recommended by structural-sealant, weatherseal-sealant, and aluminum-framed-system manufacturers for this use
   d. Color: Matching structural sealant

2.5 ENTRANCE DOOR SYSTEMS

A. Refer to Entrance Doors as specified in Division 084113 Aluminum-Framed Entrances and Storefronts Section.

B. Refer to Entrance Door Hardware as specified in Division 084113 Door Hardware Section.

2.6 ACCESSORY MATERIALS

A. Joint Sealants:
   1. For installation at perimeter of aluminum-framed systems, as specified in Division 07 Joint Sealants Section.

2.7 FABRICATION

A. Fabricate framing member components that, when assembled, have the following characteristics:
   1. Profiles that are sharp, straight, and free of defects or deformations
   2. Accurately fitted joints that are flush, hairline, and weatherproof
   3. Means to drain water passing joints, condensation within framing members, and moisture migrating within the system to exterior
   4. Physical and thermal isolation of glazing from framing members
   5. Accommodations for thermal and mechanical movements of glazing and framing that maintain required glazing edge clearances
   6. Provisions for field replacement of glazing
   7. Fasteners, anchors, and connection devices that are concealed from view to the greatest extent possible

B. Mechanically Glazed Framing Members:
   1. Fabricate for flush glazing without projecting stops.

C. Structural-Sealant-Glazed Framing Members:
   1. Include accommodations for using temporary support device to retain glazing in place while structural sealant cures.

D. Storefront Framing:
   1. Fabricate components for assembly using manufacturer's standard installation instructions.

E. After fabrication, clearly mark components to identify their locations in project according to shop drawings.

2.8 ALUMINUM FINISHES

A. Finish designations that are prefixed by AA comply with the system established by the Aluminum Association for designating aluminum finishes.

B. Factory Finishing:
   1. Kawneer Permanodic® AA-M10C21A41, AAMA 611, Architectural Class I Clear Anodic Coating (Color #14 Clear) (Optional)

PART 3 EXECUTION

3.1 EXAMINATION

A. With installer present, examine openings, substrates, structural support, anchorage, and conditions for compliance with requirements for installation tolerances and other conditions affecting performance of work:
   1. Verify rough opening dimensions.
   2. Verify levelness of sill plate.
   3. Verify operational clearances.
   4. Examine wall flashings, vapor retarders, water and weather barriers, and other built-in components for proper water management.
   5. Masonry Surfaces:
      a. Masonry surfaces must be visibly dry and free of excess mortar, sand, and other construction debris.
   6. Wood Frame Walls:
      a. Wood frame walls must be dry, clean, sound, well nailed, free of voids, and without offsets at joints.
      b. Ensure that nail heads are driven flush with surfaces in opening and within 3" (76.2 mm) of opening.
   7. Metal Surfaces:
      a. Metal surfaces must be dry and clean (free of grease, oil, dirt, rust, corrosion, and welding slag).
      b. Ensure that metal surfaces are without sharp edges or offsets at joints.

B. Proceed with installation only after correcting unsatisfactory conditions.

3.2 INSTALLATION

A. Comply with Drawings, Shop Drawings, and manufacturer's written instructions for installing aluminum-framed storefront system, accessories, and other components.

B. Install aluminum-framed storefront system so that components:
   1. Are level, plumb, square, and true to line
   2. Are without distortion and do not impede thermal movement
   3. Are anchored securely in place to structural support
   4. Are in proper relation to wall flashing and other adjacent construction

C. Set sill members in bed of sealant or with gaskets, as indicated, for weather-tight construction.

D. Install aluminum-framed storefront system and components to drain condensation, water penetrating joints, and moisture migrating within aluminum-framed storefront system to the exterior.

E. Separate aluminum and other corrodible surfaces from sources of corrosion or electrolytic action at points of contact with other materials.

3.3 FIELD QUALITY CONTROL

A. Field Tests:
   1. Architect shall select storefront units to be tested as soon as a representative portion of the project has been installed, glazed, perimeter caulked and cured.
   2. Conduct tests for air infiltration and water penetration with manufacturer's representative present.
   3. Tests that do not meet the specified performance requirements and units that have deficiencies shall be corrected as part of the contract amount.
   4. Testing shall be performed per AAMA 503 by a qualified independent testing agency. Refer to Testing Section for payment of testing and testing requirements.
   5. Air Infiltration Tests:
      a. Conduct tests in accordance with ASTM E 783.
      b. Allowable air infiltration shall not exceed 1.5 times the amount indicated in the performance requirements or 0.09 cfm/ft^2, whichever is greater.
   6. Water Infiltration Tests:
      a. Conduct tests in accordance with ASTM E 1105.
      b. No uncontrolled water leakage is permitted when tested at a static test pressure of two-thirds the specified water penetration pressure but not less than 6.2 psf (300 Pa).

B. Manufacturer's Field Services:
   1. Upon owner's written request, provide periodic site visit by manufacturer's field service representative.

3.4 ADJUSTING, CLEANING, AND PROTECTION

A. Adjusting: Not applicable.

B. Protection:
   1. Protect installed product's finish surfaces from damage during construction.

C. Cleaning:
   1. Clean glass immediately after installation.
      a. Comply with glass manufacturer's written recommendations for final cleaning and maintenance.
      b. Remove non-permanent labels and clean surfaces.
   2. Clean aluminum surfaces.
   3. Avoid damaging protective coatings and finishes.
   4. Remove excess sealants, glazing materials, dirt, and other substances.
   5. Repair or replace damaged installed products.
   6. Remove and replace glass that has been broken, chipped, cracked, abraded, or damaged during the construction period.
   7. Remove construction debris from project site and legally dispose of debris.

END OF SECTION 084115

SECTION 084413: GLAZED ALUMINUM CURTAIN WALLS

PART 1 GENERAL

1.1 RELATED DOCUMENTS

A. Drawings and general provisions of the Contract, including General and Supplementary Conditions and Division 01 Specification Sections, apply to this Section.

1.2 SUMMARY

A. This Section covers Kawneer Architectural Aluminum Curtain Wall Systems, including perimeter trims, stools, accessories, shims and anchors, and perimeter sealing of curtain wall framing.

B. Types of Kawneer Aluminum Curtain Wall Systems include:
1. 1600 Wall System®1 Curtain Wall impact resistant (IR):
a. Sight line: 2-1/2" (63.5 mm)
b. Outside-glazed pressure plate format
c. System depth:
1) 7-13/16" (198.4 mm) for 1-5/16" (33.3 mm) insulating glazing

Related Sections:

2. 072700: Air Barriers
3. 079200: Joint Sealants
4. 084113: Aluminum-Framed Entrances and Storefronts
5. 085113: Aluminum Windows
6. 088000: Glazing
7. 107113: Exterior Sun Control Devices

1.3 DEFINITIONS

A. For fenestration industry standard terminology and definitions, refer to the Fenestration & Glazing Industry Alliance (FGIA) Glossary (AAMA AG-13).

1.4 PERFORMANCE REQUIREMENTS

A. General Performance:
1. Product to comply with the specified performance requirements without failure due to defective manufacture, fabrication, installation, or other defects in construction, as determined by testing of glazed aluminum curtain walls representing those indicated for this project.
2. Glazed aluminum curtain walls shall withstand movements of supporting structure including, but not limited to, story drift, twist, column shortening, long-term creep, and deflection from uniformly distributed and concentrated live loads.
3. Failure includes any of these events:

a. Thermal stresses transferring to building structure
b. Glass breakage
c. Loosening or weakening of fasteners, attachments, and other components
d. Failure of operating units

B. Delegated Design:
1. Design glazed aluminum curtain walls, including comprehensive engineering analysis by a qualified professional engineer, using performance requirements and design criteria indicated.

C. Wind Loads:
1. The curtain wall system shall include anchorage that is capable of withstanding the following wind load design pressures:
a. Inward: 38.24 psf
b. Outward: -47.87 psf
2. The design pressures are based on the 2023 Building Code, 8th Edition.

D. Air Leakage:
1. The test specimen shall be tested in accordance with ASTM E 283.
2. Air infiltration rate shall not exceed 0.06 cfm/ft^2 (0.3 l/s · m^2) at a static air pressure differential of 6.2 psf (300 Pa).

E. Water Resistance:
1. Static:
a. The test specimen shall be tested in accordance with ASTM E 331.

2. Dynamic:
a. The test specimen shall be tested in accordance with AAMA 501.1.

F. Uniform Load:
1. A a static air design load of 40 psf (1915 Pa) shall be applied in the positive and negative direction in accordance with ASTM E 330.
2. There shall be no deflection in excess of L/175 of the span of any framing member at design load.
3. At a structural test load equal to 1.5 times the specified design load, no glass breakage or permanent set in the framing members in excess of 0.2% of their clear spans shall occur.

Seismic:

4. When tested to AAMA 501.4, system must meet design displacement (elastic) of 0.010 times the story height and ultimate displacement (inelastic) of 1.5 times the design displacement.
5. When tested to AAMA 501.6, system must meet dynamic seismic drift causing glass fallout (ΔFallout) of 4.75" or 0.0300 times the story height.

G. Thermal Transmittance (U-factor), Physical Test:
1. Thermal transmittance test results in accordance with AAMA 1503

2. When tested using AAMA 1503, the thermal transmittance (U-factor) shall not be more than 0.66 Btu/hr/(hr·ft²·°F).

H. Thermal Transmittance (U-factor), Physical Test:
1. Thermal transmittance test results in accordance with AAMA 1503 or CSA A440 are based upon 1" (25.4 mm) clear, low-emissivity coated glass insulating unit, (1/4" e=0.035, #2), 1/2" warm edge spacer and argon fill gas, 1/4").
2. When tested using AAMA 1503, the thermal transmittance (U-factor) shall not be more than 0.43 Btu/(hr·ft²·°F).

I. Thermal Transmittance (U-factor), Simulation:
1. Thermal transmittance simulation results using NFRC 100 or AAMA 507 are based on a Center of Glass (COG) U-factor of 0.24 Btu/(hr·ft²·°F) and a warm-edge spacer.
2. When simulated using NFRC 100 or AAMA 507, the U-factor shall not be more than 0.39 Btu/(hr·ft²·°F) or project specific (____) Btu/(hr·ft²·°F) per AAMA 507 or (____) Btu/(hr·ft²·°F) per NFRC 100.
3. When tested to ASTM E90 and ASTM E1425, the Sound Transmission Class (STC) and Outdoor/Indoor Transmission Class (OITC) shall not be less than:
a. STC 31 or OITC 26 based upon 1" (25.4 mm) insulating glass (1/4", 1/2" AS, 1/4")
b. STC 37 or OITC 30 based upon 1" (25.4 mm) laminated glass (1/4" laminated, 1/2" AS, 1/4" laminated)

J. Windborne-Debris-Impact Resistance Performance:
1. Performance shall be tested in accordance with TAS 201/203, ASTM E1886 and information in ASTM E1996:
a. Large-Missile Impact: For aluminum-framed systems located within 30 feet (9.1 m) of grade
b. Small-Missile Impact: For aluminum-framed systems located above 30 feet (9.1 m) of grade

K. Blast Mitigation Performance:
1. Performance shall be tested or proven through analysis to meet ASTM F1642, GSA-TS01, and UFC 04-010.01 performance criteria.
2. The following options are available to meet UFC 04-010-01, B-3.1 Standard 10 for Windows and Skylights:
a. Section B-3.1.1 Dynamic analysis
b. Section B-3.1.2 Testing
c. Section B-3.1.3 ASTM F2248 Design Approach

L. Environmental Product Declaration (EPD): Shall have a Type III Product-Specific EPD created from a Product Category Rule.

1.5 SUBMITTALS

A. Product Data:

1. For each type of product indicated, include:
   a. Construction details
   b. Material descriptions
   c. Dimensions of individual components and profiles
   d. Finishes

Environmental Product Declaration (EPD):

   e. Include a Type III Product-Specific EPD created from a Product Category Rule.
2. Material Ingredient Reporting:
   a. Include documentation for material reporting that has a complete list of chemical ingredients to at least 100 ppm (0.01%) that covers 100% of the product.

B. Shop Drawings:
   1. Plans
   2. Elevations
   3. Sections
   4. Full-size details
   5. Attachments to other work

C. Samples for Initial Selection:
   1. Provide samples for units with factory-applied color finishes.

D. Samples for Verification:
   1. Provide a verification sample for each type of exposed finish required, in manufacturer's standard sizes.

E. Product Test Reports:
   1. Provide test reports for glazed aluminum curtain walls.
   2. Test reports must be based on evaluation of comprehensive tests performed by a qualified preconstruction testing agency.
   3. Test reports must indicate compliance with performance requirements.

F. Fabrication Sample:
   1. Provide a fabrication sample of each vertical-to-horizontal intersection of aluminum-framed curtain wall systems, made from 12" (304.8 mm) lengths of full-size components and showing details of the following:
      a. Joinery
      b. Glazing

1.6 QUALITY ASSURANCE

A. Installer Qualifications:
   1. Installer must have successfully installed the same or similar systemsrequired for the project and other projects of similar size and scope.

B. Manufacturer Qualifications:
   1. Manufacturer must be capable of fabricating glazed aluminum curtain walls that meet or exceed the stated performance requirements.

C. Source Limitations:
   1. Obtain aluminum curtain wall system through one source from a single manufacturer.

D. Product Options:
   1. Information on drawings and in specifications establishes requirements for aesthetic effects and performance characteristics of assemblies. Aesthetic effects are indicated by dimensions, arrangements, alignment, and profiles of components and assemblies as they relate to sightlines, to one another, and to adjoining construction.
   2. Do not modify intended aesthetic effects, as judged solely by Architect, except with Architect's approval. If modifications are proposed, submit comprehensive explanatory data to Architect for review.

E. Mockups:
   1. Build mockups to verify selections made under sample submittals and to demonstrate aesthetic effects and set quality standards for materials and execution.
   2. Build mockups for the type(s) of curtain wall elevation(s) indicated, in location(s) shown on drawings.

F. Pre-installation Conference:
   1. Conduct conference at project site to comply with requirements in Division 01 Project Management and Coordination Section.

1.7 PROJECT CONDITIONS

A. Field Measurements:
   1. Verify actual locations of structural supports for glazed aluminum curtain walls by field measurements before fabrication.
   2. Indicate measurements on shop drawings.

1.8 WARRANTY

A. Submit manufacturer's standard warranty for owner's acceptance.

B. Warranty Period:
   1. Two years from Date of Substantial Completion of the project provided however that in no event shall the Limited Warranty begin later than six months from date of shipment by manufacturer.

PART 2 PRODUCTS

2.1 MANUFACTURERS

A. Basis-of-Design Product:
1. Kawneer Company, Inc.
2. 1600 Wall System®1 Curtain Wall types:
3. Or Equal
   a. 1600 Wall System®1 Curtain Wall impact resistant (IR):
      1) Sight line: 2-1/2" (63.5 mm)
      2) Outside-glazed pressure plate format
      3) System depth:
         a) 7-13/16" (198.4 mm) for 1-5/16" (33.3 mm) insulating glazing
4. Tested to AAMA 501, ASTM E 1886, E 1996, and TAS 201, 202, 203

B. Subject to compliance with requirements, provide a comparable product by the following:

C. Substitutions:
1. Refer to Division 01 Substitutions Section for procedures and submission requirements.
2. Pre-Contract (Bidding Period) Substitutions:
   a. Submit written requests ten (10) days prior to bid date.
3. Product Literature and Drawings:
   a. Submit product literature and drawings modified to suit specific project requirements and job conditions.
4. Certificates:
   a. Submit certificate(s) certifying that the substitute manufacturer (1) attests to adherence to specification requirements for curtain wall system performance criteria, and (2) has been engaged in the design, manufacture, and fabrication of aluminum curtain walls for a period of not less than ten (10) years. (*Company Name*).
5. Test Reports:
   a. Submit test reports verifying compliance with each test requirement required by the project.
6. Samples:
   a. Provide samples of typical product sections and finish samples in manufacturer's standard sizes.

D. Substitution Acceptance:
1. Acceptance will be in written form, either as an addendum or modification.
2. Acceptance will be documented by a formal change order signed by the owner and contractor.

2.2 MATERIALS

A. Aluminum Extrusions:
1. Alloy and temper recommended by glazed aluminum curtain wall manufacturer for strength, corrosion resistance, and application of required finish
2. Not less than 0.070" (1.8 mm) wall thickness at any location for the main frame
3. Complying with ASTM B221: 6063-T6 alloy and temper

B. Aluminum Sheet Alloy:
1. Shall meet the requirements of ASTM B209.

C. Fasteners:
1. Aluminum, nonmagnetic stainless steel or other materials must be non-corrosive and compatible with aluminum members, trim hardware, anchors, and other components.

D. Anchors, Clips, and Accessories:
1. Aluminum, nonmagnetic stainless steel, or zinc-coated steel or iron complying with ASTM B 633 for SC 3 severe service conditions or other suitable zinc coating.
2. Anchors, clips, and accessories shall provide sufficient strength to withstand the design pressure indicated.

E. Pressure Plate:
1. Pressure plate shall be aluminum.
2. Pressure plate shall be fastened to the mullion with stainless steel screws.

F. Reinforcing Members:
1. Aluminum, nonmagnetic stainless steel, or nickel/chrome-plated steel complying with ASTM B 456 for Type SC 3 severe service conditions, or zinc-coated steel or iron complying with ASTM B 633 for SC 3 severe service conditions or other suitable zinc coating.
2. Reinforcing members must provide sufficient strength to withstand the design pressure indicated.

G. Sealant:
1. For sealants required within fabricated curtain wall system, provide permanently elastic, non-shrinking, and non-migrating type recommended by sealant manufacturer for joint size and movement.

H. Thermal Barrier:
1. Thermal separator shall be extruded of a silicone compatible elastomer that provides a minimum 1/4" (6.3 mm) separation.

I. Tolerances:

1. References to tolerances for wall thickness and other cross-sectional dimensions of glazed curtain wall members are nominal and in compliance with AA Aluminum Standards and Data.

J. Red List Free:

2.3 CURTAIN WALL FRAMING

A. Framing Members:
1. Manufacturer's standard extruded- or formed-aluminum framing members of thickness required and reinforced as required to support imposed loads
2. Glazing System: Four-sided captured
3. Glazing Plane: Front

B. Glass:
1. Insulating glass options:
a. 1-5/16" (33.3 mm)

C. Brackets and Reinforcements:
1. Manufacturer's standard high-strength aluminum with non-staining, non-ferrous shims for aligning system components.

D. Framing Sealants:
1. Shall be suitable for glazed aluminum curtain wall as recommended by sealant manufacturer.

E. Fasteners and Accessories:
1. Manufacturer's standard corrosion-resistant, non-staining, non-bleeding fasteners and accessories must be compatible with adjacent materials.
2. Where exposed, fasteners and accessories shall be stainless steel.

F. Perimeter Anchors:
1. When steel anchors are used, provide insulation between steel material and aluminum material to prevent galvanic action.

G. Packing, Shipping, Handling, and Unloading:
1. Deliver materials in manufacturer's original, unopened, undamaged containers with identification labels intact.

H. Storage and Protection:
1. Store materials so that they are protected from exposure to harmful weather conditions.
2. Handle material and components to avoid damage.
3. Protect material against damage from elements, construction activities, and other hazards before, during, and after installation.

2.4 GLAZING

A. Glazing to meet requirements in Division 08 Glazing Section.

B. Available Glazing Options:
1. 1600 Wall System®1 IR Curtain Wall:
a. System depth:
1) 7-13/16" (198.4 mm) for 1-5/16" (33.3 mm) insulating glazing

C. Glazing Gaskets:
1. Gaskets to meet requirements of ASTM C864.

D. Spacers and Setting Blocks:
1. Manufacturer's standard elastomeric type

E. Bond-Breaker Tape:
1. Manufacturer's standard TFE-fluorocarbon or polyethylene material to which sealants will not develop adhesion.

F. Glazing Sealants:
1. As recommended by manufacturer for joint type.

2.5 OPERABLE UNITS

A. Doors comply with Division 08 Aluminum-Framed Entrances and Storefronts Section.

B. Windows comply with Division 08 Aluminum Windows Section.

2.6 ACCESSORY MATERIALS

A. Bituminous Paint:
1. Cold-applied asphalt-mastic paint
2. Complies with SSPC-Paint 12 requirements except containing no asbestos
3. Formulated for 30-mil (0.762 mm) thickness per coat

B. Versoleil® SunShade - Outrigger/Single Blade System:
1. Aluminum sunshade that consists of outriggers, louvers, and fascia which may be selected from standard configurations, modified configurations, or customized configuration.
2. Anchored directly to the vertical curtain wall mullions.
3. Anchors shall be painted:
a. Select from Kawneer’s standard paints and colors. Custom colors are available upon request.
4. Louvers and fascia shall be painted or anodized:

a. Painted: Select from Kawneer's standard paints and colors. Custom colors are available upon request.
b. Anodized: Select from Kawneer's anodized finishes.
c. Panel/shelf projection not exceeding 30" (762 mm).
d. Mullion spacing of framing system shall not exceed 6' (1.83 m) on center.
e. Panel/shelf deflection shall not exceed 1/120 of horizontal span length.
f. Manufacturer's installation instructions
g. Samples for verification:
   1) Factory-applied finish as selected by architect
   2) Functioning Light Shelf sample demonstrating operation
h. Shop drawing, including plans, elevations, sections, fabrication, and installation details
i. Validation from manufacturer of single-source for light shelf and framing system and compatibility between the systems

2.7 FABRICATION

A. Extrude or form aluminum shapes before finishing.

B. Fabricate components that, when assembled, have the following characteristics:
1. Profiles that are sharp, straight, and free of defects or deformations
2. Accurately fitted joints
3. Physical and thermal isolation of glazing from framing members
4. Accommodations for thermal and mechanical movements of glazing and framing that maintain required glazing edge clearances
5. Provisions for field replacement of glazing from exterior
6. Fasteners, anchors, and connection devices that are concealed from view to the greatest extent possible
7. Internal weeping system or other means to drain water passing joints, condensation occurring within framing members, and moisture migrating within glazed aluminum curtain wall to exterior

C. Curtain Wall Framing:
1. Fabricate components for assembly using shear block system following manufacturer's standard installation instructions.

D. After fabrication, clearly mark components to identify their locations in project according to shop drawings.

2.8 ALUMINUM FINISHES

A. Finish designations that are prefixed by AA comply with the system established by the Aluminum Association for designating aluminum finishes.

B. Factory Finishing:

1. Kawneer Permanodic® AA-M10C21A31, AAMA 611, Architectural Class II Clear Anodic Coating (Color #14 Clear) (Standard)

PART 3 EXECUTION

3.1 EXAMINATION

A. With installer present, examine areas for compliance with requirements for installation tolerances and other conditions affecting performance of the work.

B. Proceed with installation only after correcting unsatisfactory conditions.

3.2 INSTALLATION

A. Curtain Wall System Installation:
1. Install curtain wall systems plumb, level, and true to line, without warp or rack of frames, within manufacturer's prescribed tolerances, and complying with installation instructions.
2. Provide support and anchor in place.
3. Dissimilar Materials:
   a. Provide separation of aluminum materials from sources of corrosion or electrolytic action contact points.
4. Glazing:
   a. Glass shall be outside-glazed.
   b. Glass shall be held in place with extruded aluminum pressure plates anchored to the mullion using stainless steel fasteners that are spaced no more than 9" (228.6 mm) on center.
5. Water Drainage
   a. Each light of glass shall be compartmentalized using joint plugs and silicone sealant to divert water to the horizontal weep locations.
   b. Weep holes shall be located in the horizontal pressure plates and covers to divert water to the exterior of the building.

B. Related Products Installation:
1. Sealants (Perimeter):
   a. Refer to Joint Treatment (Sealants) Section.
2. Glass:
   a. Refer to Glass and Glazing Section.
   b. Reference: ANSI Z97.1, CPSC 16 CFR 1201, and GANA Glazing Manual.

3.3 FIELD QUALITY CONTROL

A. Field Tests:
1. Architect shall select curtain wall units to be tested as soon as a representative portion of the project has been installed, glazed, perimeter-caulked, and cured.

2. Conduct tests for air infiltration and water penetration with manufacturer's representative present.
3. Tests that do not meet the specified performance requirements and units that have deficiencies shall be corrected as part of the contract amount.
4. Testing shall be performed per AAMA 503 by a qualified independent testing agency. Refer to Testing Section for payment of testing and testing requirements.

5. Air Infiltration Tests:
   a. Conduct tests in accordance with ASTM E 783.
   b. Allowable air infiltration shall not exceed 1.5 times the amount indicated in the performance requirements or 0.09 cfm/ft^2, whichever is greater.
6. Water Infiltration Tests:
   a. Conduct tests in accordance with ASTM E 1105.
   b. No uncontrolled water leakage is permitted when tested at a static test pressure of two-thirds the specified water penetration pressure but not less than 8 psf (383 Pa).

B. Manufacturer's Field Services:
   1. Upon owner's written request, provide periodic site visit by manufacturer's field service representative.

3.4 ADJUSTING, CLEANING, AND PROTECTION

A. Adjusting: Not applicable.

B. Protection:
   1. Protect installed product's finish surfaces from damage during construction.
   2. Protect aluminum curtain wall system from damage from grinding and polishing compounds, plaster, lime, acid, cement, or other harmful contaminants.

C. Cleaning:
   1. Repair or replace damaged installed products.
   2. Clean installed products in accordance with manufacturer's instructions prior to owner's acceptance.
   3. Remove and replace glass that has been broken, chipped, cracked, abraded, or damaged during the construction period.
   4. Remove construction debris from project site and legally dispose of debris.

END OF SECTION 084413

SECTION 08 71 00 - DOOR HARDWARE

PART 1 GENERAL

1.01 SECTION INCLUDES

A. Hardware for wood, aluminum, and hollow metal doors.
B. Electrically operated and controlled hardware.
C. Thresholds.
D. Weatherstripping and gasketing.

1.02 RELATED REQUIREMENTS

A. Section 07 92 00 - Joint Sealants: Sealants for setting exterior door thresholds.
B. Section 08 11 13 - Hollow Metal Doors and Frames.
C. Section 08 11 16 - Aluminum Doors and Frames.
D. Section 08 12 13 - Hollow Metal Frames.
E. Section 08 14 16 - Flush Wood Doors.
F. Section 08 33 23 - Overhead Coiling Doors: Door hardware, except cylinders.
G. Section 08 43 13 - Aluminum-Framed Storefronts: Door hardware, except as noted in section.
H. Section 10 26 00 - Wall and Door Protection: Door and frame protection.
I. Section 28 10 00 - Access Control: Electronic access control devices.

1.03 REFERENCE STANDARDS

A. ADA Standards - 2010 ADA Standards for Accessible Design; 2010.
B. ASTM E283/E283M - Standard Test Method for Determining Rate of Air Leakage Through Exterior Windows, Skylights, Curtain Walls, and Doors Under Specified Pressure Differences Across the Specimen; 2019.
C. BHMA A156.1 - Standard for Butts and Hinges; 2021.
D. BHMA A156.2 - Bored and Preassembled Locks and Latches; 2022.
E. BHMA A156.3 - Exit Devices; 2020.
F. BHMA A156.4 - Door Controls - Closers; 2019.
G. BHMA A156.5 - Cylinders and Input Devices for Locks; 2020.
H. BHMA A156.6 - Standard for Architectural Door Trim; 2021.
I. BHMA A156.7 - Template Hinge Dimensions; 2016.
J. BHMA A156.16 - Auxiliary Hardware; 2018.
K. BHMA A156.18 - Materials and Finishes; 2020.
L. BHMA A156.21 - Thresholds; 2019.
M. BHMA A156.22 - Standard for Gasketing; 2021.
N. BHMA A156.25 - Electrified Locking Devices; 2023.
O. BHMA A156.28 - Standard for Recommended Practices for Mechanical Keying Systems; 2018.
P. BHMA A156.115 - Hardware Preparation in Steel Doors and Steel Frames; 2016.
Q. BHMA A156.115W - Hardware Preparation in Wood Doors with Wood or Steel Frames; 2006.
R. DHI (H&S) - Sequence and Format for the Hardware Schedule; 2019.
S. DHI (KSN) - Keying Systems and Nomenclature; 2019.

T. DHI (LOCS) - Recommended Locations for Architectural Hardware for Standard Steel Doors and Frames; 2004.

U. DHI WDHS.3 - Recommended Locations for Architectural Hardware for Flush Wood Doors; 1993; also, in WDHS-1/WDHS-5 Series, 1996.

V. FLA (FBC-B) - Florida Building Code: Building (7th Edition); 2020.

W. ICC A117.1 - Accessible and Usable Buildings and Facilities; 2017.

X. Miami (APD) - Approved Products Directory; Miami-Dade County; Current Edition.

Y. NFPA 70 - National Electrical Code; Most Recent Edition Adopted by Authority Having Jurisdiction, Including All Applicable Amendments and Supplements.

Z. NFPA 80 - Standard for Fire Doors and Other Opening Protectives; 2022.

AA. NFPA 105 - Standard for Smoke Door Assemblies and Other Opening Protectives; 2022.

BB. UL (DIR) - Online Certifications Directory; Current Edition.

CC. UL 10C - Standard for Positive Pressure Fire Tests of Door Assemblies; Current Edition, Including All Revisions.

1.04 ADMINISTRATIVE REQUIREMENTS

A. Coordinate the manufacture, fabrication, and installation of products that door hardware is installed on.

B. Sequence installation to ensure facility services connections are achieved in an orderly and expeditious manner.

C. Preinstallation Meeting: Convene a preinstallation meeting one week prior to commencing work of this section; require attendance by affected installers and the following:
   1. Architect.
   2. Installer's Architectural Hardware Consultant (AHC).
   3. Hardware Installer.
   4. Owner's Security Consultant.

D. Furnish templates for door and frame preparation to manufacturers and fabricators of products requiring internal reinforcement for door hardware.

E. Keying Requirements Meeting:
   1. Attendance Required:
      a. Contractor.
      b. Owner.
      c. Installer's Architectural Hardware Consultant (AHC).
      d. Manufacturer Representative / Key System Specialist.
   2. Agenda:
      a. Establish keying requirements.
      b. Verify locksets and locking hardware are functionally correct for project requirements.
      c. Verify that keying and programming complies with project requirements.
      d. Establish keying submittal schedule and update requirements.
   3. Incorporate "Keying Requirements Meeting" decisions into keying submittal upon review of door hardware keying system including, but not limited to, the following:
      a. Access control requirements.
      b. Flow of traffic and extent of security required.
   4. Record minutes and distribute copies within two days after meeting to participants, with two copies to Architect, Owner, participants, and those affected by decisions made.
   5. Deliver established keying requirements to manufacturers.

1.05 SUBMITTALS

A. See Section 01 30 00 - Administrative Requirements for submittal procedures.

B. Product Data: Manufacturer's catalog literature for each type of hardware, marked to clearly show products to be furnished for this project, and includes construction details, material descriptions, finishes, and dimensions and profiles of individual components.

C. Shop Drawings - Door Hardware Schedule: A detailed listing that includes each item of hardware to be installed on each door.
   1. Prepared by or under supervision of Architectural Hardware Consultant (AHC).
   2. Comply with DHI (H&S) using door numbering scheme and hardware set numbers as indicated in Contract Documents.
      a. Submit in vertical format.
   3. Include complete description for each door listed.

D. Shop Drawings - Electrified Door Hardware: Include diagrams for power, signal, and control wiring for electrified door hardware that include details of interface with building safety and security systems. Provide elevations and diagrams for each electrified door opening as follows:
   1. Prepared by or under supervision of Architectural Hardware Consultant (AHC).
   2. Elevations: Include front and back elevations of each door opening showing electrified devices with connections installed and an operations narrative describing how opening operates from either side at any given time.

E. Manufacturer's Installation Instructions: Indicate special procedures and perimeter conditions requiring special attention.

F. Manufacturer's qualification statement.

G. Installer's qualification statement.

H. Supplier's qualification statement.

I. Maintenance Data: Include data on operating hardware, lubrication requirements, and inspection procedures related to preventative maintenance.

J. Keying Schedule:
   1. Submit three (3) copies of Keying Schedule in compliance with requirements established during Keying Requirements Meeting unless otherwise indicated.

K. Warranty: Submit manufacturer's warranty and ensure that forms have been completed in Owner's name and registered with manufacturer.

L. Project Record Documents: Record actual locations of concealed equipment, services, and conduit.

M. Maintenance Materials and Tools: Furnish the following for Owner's use in maintenance of project.
   1. See Section 01 60 00 - Product Requirements, for additional provisions.

1.06 QUALITY ASSURANCE

A. Manufacturer Qualifications: Company specializing in manufacturing products specified in this section with minimum three years of documented experience.

B. Installer Qualifications: Company specializing in performing work of the type specified for commercial door hardware with at least three years of documented experience.

C. Supplier Qualifications: Company with certified Architectural Hardware Consultant (AHC) and Electrified Hardware Consultant (EHC) to assist in work of this section.

1.07 DELIVERY, STORAGE, AND HANDLING

A. Package hardware items individually; label and identify each package with door opening code to match door hardware schedule.

1.08 WARRANTY

A. See Section 01 78 00 - Closeout Submittals for additional warranty requirements.

B. Manufacturer Warranty: Provide manufacturer warranty against defects in material and workmanship for period indicated, from Date of Substantial Completion. Complete forms in Owner's name and register with manufacturer.
   1. Closers: Ten years, minimum.
   2. Exit Devices: Five years, minimum.
   3. Locksets: Five years, minimum.

PART 2 PRODUCTS

2.01 GENERAL REQUIREMENTS

A. Provide specified door hardware as required to make doors fully functional, compliant with applicable codes, and secure to extent indicated.

B. Provide individual items of single type, of same model, and by same manufacturer.

C. Locks: Provide a lock for each door, unless it is indicated that lock is not required.
   1. Lock Function: Provide lock and latch function numbers and descriptions of manufacturer's Series. As indicated in hardware sets.
   2. Trim: Provide lever handle or pull trim on outside of each lock, unless otherwise indicated.
   3. Strikes:
      a. Finish: To match lock or latch.
      b. Curved-Lip Strikes: Provide as standard, with extended lip to protect frame, unless otherwise indicated.
      c. Omit strike for openings with electric strikes.

D. Door Pulls and Push Plates:
   1. Provide door pulls and push plates on doors without a lockset, latch set, exit device, or auxiliary lock unless otherwise indicated.
   2. On solid doors, provide matching door pull and push plate on opposite faces.

E. Closers:
   1. Provide door closer on each exterior door, unless otherwise indicated.
   2. Provide door closer on each fire-rated and smoke-rated door.
   3. Spring hinges are not an acceptable self-closing device, unless otherwise indicated.

F. Drip Guards: Provide at head of out swinging exterior doors unless protected by roof or canopy directly overhead. No drip guards required at aluminum storefront openings.

G. Thresholds:
   1. Exterior Applications: Provide at each exterior door, unless otherwise indicated.

H. Weatherstripping and Gasketing:
   1. Provide weatherstripping on each exterior door at head, jambs, and meeting stiles of door pairs, unless otherwise indicated.
   2. Provide door bottom sweep on each exterior door, unless otherwise indicated.

I. Electrically Operated and/or Controlled Hardware: Provide necessary power supplies, power transfer hinges, relays, and interfaces as required for proper operation; provide wiring between hardware and control components and to building power connection in compliance with NFPA 70.

J. See Section 28 10 00 for additional access control system requirements.

K. Fasteners:
   1. Provide fasteners of proper type, size, quantity, and finish that comply with commercially recognized standards for proposed applications.
      a. Aluminum fasteners are not permitted.
      b. Provide Phillips flat-head screws with heads finished to match door surface hardware unless otherwise indicated.

2. Provide machine screws for attachment to reinforced hollow metal and aluminum frames.
   a. Self-drilling (Tek) type screws are not permitted.
3. Provide stainless steel machine screws and lead expansion shields for concrete and masonry substrates.
4. Provide wall grip inserts for hollow wall construction.
5. Fire-Resistance-Rated Applications: Comply with NFPA 80.
   a. Provide wood or machine screws for hinges mortised to doors or frames, strike plates to frames, and closers to doors and frames.
   b. Provide steel through bolts for attachment of surface mounted closers, hinges, or exit devices to door panels unless proper door blocking is provided.

2.02 PERFORMANCE REQUIREMENTS

A. Provide door hardware products that comply with the following requirements:
   1. Applicable provisions of federal, state, and local codes.
   2. Accessibility: ADA Standards and ICC A117.1.
   3. Hardware Preparation for Steel Doors and Steel Frames: BHMA A156.115.
   4. Hardware Preparation for Wood Doors with Wood or Steel Frames: BHMA A156.115W.
   5. Products Requiring Electrical Connection: Listed and classified by UL (DIR) as suitable for the purpose specified.

2.03 HINGES

A. Manufacturers: Conventional butt hinges.
   1. BEST; dormakaba Group: www.bestaccess.com/#sle.
   2. McKinney.
   3. PBB.

B. Properties:
   1. Butt Hinges: As applicable to each item specified.
      a. Standard Weight Hinges: Minimum of two (2) permanently lubricated non-detachable bearings.
      b. Heavy Weight Hinges: Minimum of four (4) permanently lubricated bearings on heavy weight hinges.
      c. Template screw hole locations.
      d. Bearing assembly installed after plating.
      e. Bearings: Exposed fully hardened bearings.
      f. Bearing Shells: Shapes consistent with barrels.
      g. Pins: Easily seated, non-rising pins.
         1) Fully plated hinge pins.
         2) Non-Removable Pins: Slotted stainless steel screws.
      h. UL 10C listed for fire-resistance-rated doors.

C. Sizes: See Door Hardware Schedule.
   1. Hinge Widths: As required to clear surrounding trim.
   2. Sufficient size to allow 180 degree swing of door.

D. Finishes: See Door Hardware Schedule.
   1. Fully polished hinges; front, back, and barrel.

E. Grades:
   1. Butt Hinges: Comply with BHMA A156.1 and BHMA A156.7 for templated hinges.
   2. Comply with BHMA A156.18 Materials and Finishes.

F. Material: Base metal as indicated for each item by BHMA material and finish designation.

G. Types:
   1. Butt Hinges: Include full mortise hinges.

H. Quantities:

1. Butt Hinges: Three (3) hinges per leaves up to 90 inches in height. Add one (1) for each additional 30 inches in height or fraction thereof.
    a. Hinge weight and size unless otherwise indicated in hardware sets:
        1) For doors up to 36 inches wide and up to 1-3/4 inches thick provide hinges with a minimum thickness of 0.134 inch and a minimum of 4-1/2 inches in height.
        2) For doors from 36 inches wide up to 42 inches wide and up to 1-3/4 inches thick provide hinges with a minimum thickness of 0.145 inch and a minimum of 4-1/2 inches in height.
        3) For doors from 42 inches wide up to 48 inches wide and up to 1-3/4 inches thick provide hinges with a minimum thickness of 0.180 inch and a minimum of 5 inches in height.
        4) For doors greater than 1-3/4 inches thick provide hinges with a minimum thickness of 0.180 inch and a minimum of 5 inches in height.

I. Applications: At swinging doors.
1. Provide non-removable pins at out-swinging doors with locking hardware and all exterior doors.

J. Products:
1. Butt Hinges:
    a. Ball Bearing, Five (5) Knuckle. FBB Series.

2.04 BOLTS

A. Manufacturers:
1. Ives.
2. Rockwood.

B. Properties:
1. Surface Bolts: Manufacturer's standard.
    a. Bolt Throw: 3/4 inch, minimum.

C. Products:
1. Surface bolts. SB360

2.05 EXIT DEVICES

A. Manufacturers:
1. Von Duprin.
2. Substitutions on permitted.

B. Properties:
1. Actuation: Push Pad.
2. Chassis:
    a. Compatibility: Standard Stile and Narrow Stile doors.
3. Touchpads: 'T" style metal touchpads and rail assemblies with matching chassis covers end caps.
4. Latch Bolts: Stainless steel deadlocking with 3/4 inch projection using latch bolt.
5. Lever Design: Match project standard lockset trims.
6. Cylinder: Include where cylinder dogging or locking trim is indicated.
7. Strike as recommended by manufacturer for application indicated.
8. Sound dampening on touch bar.
9. Dogging:
    a. Non-Fire-Resistance-Rated Devices: Cylinder dogging.
    b. Fire-Resistance-Rated Devices: Manual dogging not permitted.
10. Touch bar assembly on wide style exit devices to have a 1/4 inch clearance to allow for vision frames.

11. All exposed exit device components to be of architectural metals and “true” architectural finishes.
12. Handing: Field-reversible.
13. Fasteners on Back Side of Device Channel: Concealed - exposed fasteners not allowed.
14. Vertical Latch Assemblies' Operation: Gravity, without use of springs.
15. Provide exit devices of proper length so that push pad is at least 50% of door width.

C. Grades: Complying with BHMA A156.3, Grade 1.

D. Performance Requirements:
1. Exterior Door Exit Devices in Hurricane-Strength Wind Areas:
a. Devices included in Miami (APD) (Miami-Dade County Approved Products Directory).
b. Complying with FLA (FBC-B) (Florida Building Code).

E. Standards Compliance:
1. UL Listed for Panic and Fire for Class II Circuitry.
2. Provide UL (DIR) listed exit device assemblies for fire-resistance-rated doors.
3. Comply with UL 10C.

F. Code Compliance: As required by authorities having jurisdiction in the State in which the Project is located.

G. Options:
1. Electrified Devices:
a. Latchbolt Retraction: Motorized latchbolt retraction.
2. Internally mounted switch used to signal other components.
3. Electrified Device Voltage: 24 VDC.

H. Products:
1. 98 Series.

2.06 LOCK CYLINDERS

A. Manufacturers:
1. BEST, dormakaba Group: www.bestaccess.com/#sle.
2. Schlage.

B. Properties:
1. Lock Cylinders: Provide key access on outside of each lock, unless otherwise indicated.
a. Provide cylinders from same manufacturer as locking device.
b. Provide cams and/or tailpieces as required for locking devices.
c. Provide cylinders with appropriate format interchangeable cores where indicated.

C. Grades:
1. Standard Security Cylinders: Comply with BHMA A156.5.

D. Material:
1. Manufacturer's standard corrosion-resistant brass alloy.

E. Types: As applicable to each item specified.
1. Standard security small format interchangeable core (SFIC) type cylinders, with seven-pin, 1C - 7-pin cores. (BASIS OF DESIGN).
2. Verify specific cylinder and keying requirements with Owner.

F. Products:
1. Rim/mortise. 12E / 1E Series.

2.07 CYLINDRICAL LOCKS

A. Manufacturers:
1. BEST, dormakaba Group: www.bestaccess.com/#sle.
2. Schlage.

B. Properties:
   1. UL listed for use on single or pairs of doors with fire-resistance-rating up to 3 hours and latchbolt throw of 1/2 inch.
   2. Mechanical Locks:
      a. Fitting modified ANSI A115.2 door preparation.
      b. Door Thickness Fit: 1-3/8 inches to 2-1/4 inches thick doors.
      c. Construction: Hub, side plate, shrouded rose, locking pin to be a one-piece casting with a shrouded locking lug.
         1) Through-bolted anti-rotational studs.
      d. Cast stainless steel latch retractor with roller bearings for exceptionally smooth operation and superior strength and durability.
      e. Bored Hole: 2-1/8 inch diameter.
      f. Backset: 2-3/4 inches unless otherwise indicated.
      g. Latch: Single piece tail-piece construction.
         1) Latchbolt Throw: 1/2 inch, minimum.
      h. Cylinders:
         1) Cylinder Core Types: Locks capable of supporting manufacturers' cores, as applicable.
            (a) Small format interchangeable (Basis of Design). Verify specific requirements with Owner.
      i. Lever Trim:
         1) Style: See Door Hardware Schedule.
         2) Functionality: Allow the lever handle to move up to 45 degrees from horizontal position prior to engaging the latchbolt assembly.
         3) Strength: Locksets outside locked lever designed to withstand minimum1,400 inch-lbs. of torque. In excess of that, a replaceable part will shear. Key from outside and/or inside lever will still operate lockset.
         4) Independent spring mechanism for each lever.
            (a) Contain lever springs in the main lock hub.
         5) Outside Lever Sleeve: Seamless one-piece construction.
         6) Keyed Levers: Removable only after core is removed by authorized control key.
   3. Electrified Locks: Same properties as standard locks, and as follows:
      a. Voltage: 24 VDC.
      b. Function: Electrically locked (Fail Safe) or unlocked (Fail Secure), as indicated for each lock in Door Hardware Schedule.
      c. Temperature Control Module (TCM).
      d. Internal request-to-exit feature.

C. Finishes: See Door Hardware Schedule.
   1. Core Faces: Match finish of lockset.

D. Grades: Comply with BHMA A156.2, Grade 1, Series 4000, Operational Grade 1, Extra Heavy Duty.

E. Material: Manufacturer's standard for specified lock.
   1. Critical Latch and Chassis Components: Brass or corrosion-resistance treated steel.
   2. Outside Lever Sleeve: Hardened steel alloy.

F. Options:
   1. Regulatory Compliance: As required by authorities having jurisdiction the State in which the Project is located.
      a. Meeting requirements of Florida Building Code and approved for use in Miami-Dade County:

G. Products: Cylindrical locks, including mechanical and electrified types.
   1. 9K / 9KW (Grade 1).

2.08 ELECTRIC STRIKES

A. Manufacturers:
   1. RCI
   2. HES.

B. Properties:
   1. 24 VDC operation.
   2. Provide fail-secure operation.
   3. For openings with locksets, accept 1/2" latch projection.
   4. For use with exit devices, accept rim type exit device latch.

C. Grades:
   1. Certified to ANSI/BHMA standard A156.31
   2. Grade 1, endurance
   3. UL 10C listed.
   4. UL 294 listed.

D. Material
   1. Stainless Steel

E. Products:
   1. Elec. Rim Strike: 0162
   2. Centerline: 2364

2.09 DOOR PULLS AND PUSH PLATES

A. Manufacturers:
   1. Burns.
   2. Rockwood.
   3. ABH.

B. Properties:
   1. Pull Type: Straight, unless otherwise indicated.
   2. Push Plate Type: Flat, with square corners, unless otherwise indicated.
      a. Edges: Beveled, unless otherwise indicated.
      b. Plate Dimension: 4" x 16"

C. Grades: Comply with BHMA A156.6.

D. Material: Stainless steel, unless otherwise indicated.

E. Products:
   1. Push-Pull Plates. 54 / 5410.

2.10 CLOSERS

A. Manufacturers:
   1. BEST, dormakaba Group www.bestaccess.com/#sle.
   2. LCN.

B. Properties:
   1. Surface Mounted Closers: Manufacturer's standard.
      a. Construction: Cast iron.
      b. Maximum Projection from Face of Door: 2-7/16 inches.
      c. Mechanism: Separate tamper-resistant adjusting valves for closing and latching speeds.
      d. Hydraulic Fluid: All-weather type.
      e. Arm Assembly: Standard for product specified.

1) Include hold-open, integral stop, or spring-loaded stop feature, as specified in hardware sets.
2) Parallel arm to be a heavy-duty rigid arm.
3) Where “IS” or “S-IS” arms are specified in hardware sets, if manufacturer does not offer this arm provide a regular arm mount closer in conjunction with a heavy-duty overhead stop equal to a dormakaba 900 Series.

f. Covers:
1) Type: Standard for product selected.
2) Material: Plastic.
3) Finish: Painted.

C. Grades:
1. Closers: Comply with BHMA A156.4, Grade 1.
a. Underwriters Laboratories Compliance:
1) Product Listing: UL (DIR) and ULC for use on fire-resistance-rated doors.
(a) UL 228 - Door Closers-Holders, With or Without Integral Smoke Detectors.
b. Testing Standards Compliance: Meeting requirements of UL 10C for positive pressure.

D. Types:
1. Rack-and-pinion, surface-mounted. 1-1/2 inches minimum bore.

E. Options:
1. Delayed action, adjustable with an independent valve.
2. Advanced backcheck.
3. Adjustable, for force or angle of opening hold open.

F. Installation:
1. Mounting: Includes surface mounted installations.
2. Mount closers on non-public side of door and stair side of stair doors unless otherwise noted in hardware sets.
3. At out swinging exterior doors, mount closer on interior side of door.
4. Provide adapter plates, shim spacers, and blade stop spacers as required by frame and door conditions.
5. Where an overlapping astragal is included on pairs of swinging doors, provide coordinator to ensure door leaves close in proper order.

G. Products:
1. Surface Mounted:
a. EHD9000

2.11 SWINGING DOOR OPERATORS

A. Manufacturers:
1. dormakaba; dormakaba Group: www.dormakaba.com/us-en/#sle.
2. Besam.

B. Properties:
1. Where automatic operators are scheduled, provide complete assemblies of controls, switches, power supplies, relays, and parts/material recommended and approved by the manufacturer of the automatic operator for each individual leaf. Control both doors with actuators simultaneously at pairs. Locate actuators, key switches, and other controls as directed by Architect.
2. Power-Assist Low Energy Operators:
a. Construction: Manufacturer's standard units with full covers.
b. Door Operation Limits:
1) Weight: 220 lbs.
2) Width: 48 inches.

3) Temperature Range: 5 to 122 degrees F.

c. Function Adjustability: Selectable low-energy or power-assist applications. Low-energy function to cycle the door open as programmed. Power-assist function for decreased opening force when manually operated. Operator to have a programmable push-and-go functionality.

d. Auxiliary Power Supply: 24VDC, 1.5A and form C relay contact for controlling fail safe/secure locking devices 50VAC or DC at 1A max.

e. Programmable Operation: Include sweep speed, latch speed, and backcheck cushioning.

f. Power-Open Functions: Include delay time, opening time, opening force, and opening angle.

1) Angle and door width selector.

2) Power boost feature.

g. On-board cycle counter.

h. Selectable jumper to accommodate push or pull side applications.

i. On/off strike delay when the operator must delay while a locking device releases.

j. Selectable on/off obstacle detection on closing.

3. Actuators:

a. Hard-Wired Units: Wall-mounted and tamper-resistant.

1) Normally open switch.

2) Construction: Stainless-steel face plates, with heavy duty injection molded black ABS mounting boxes.

3) Face Plate: Include manufacturer's standard international accessibility symbol and text "Press to Open".

C. Grades:

1. Comply with BHMA A156.19.

2. Underwriters Laboratories Compliance:

a. Product Listing: UL (DIR) and ULC for use on fire-resistance-rated doors.

b. United States: UL 325.

3. California State Fire Marshal Approved.

D. Types:

1. Power-Assist Low-Energy Operators:

E. Options: As applicable to each item specified.

1. Delayed action, adjustable with an independent valve.

2. Advanced backcheck.

3. Heavy-duty arms and knuckles/elbows.

4. Adjustable, for force or angle of opening hold open.

5. Cushion limit stay.

F. Installation:

1. Operator Actuators: Include required back boxes, mounting rings, accessories as needed for fixed unit installation.

G. Products:

1. ED100LE, ED50.

2.12 OVERHEAD STOPS AND HOLDERS

A. Manufacturers:

1. dormakaba; dormakaba Group: www.dormakaba.com/us-en/#sle.

2. ABH Mfg.

3. Rixson

B. Properties:

C. Sizes: Manufacturer's standard for the application.

D. Finishes:
   1. Arms and Brackets: Zinc-plated.

E. Grades: As applicable to item specified.
   1. Comply with BHMA A156.8, Grade 1.

F. Material: Base metal as indicated for each item by BHMA material and finish designation.
   1. Track Channel: Extruded aluminum alloy.
   2. Slide Block: Machined from solid brass alloy.

G. Types:
   1. Surface-applied.

H. Products:
   1. Surface Overhead Stops and Holders:
      a. 900 Heavy Duty.

2.13 PROTECTION PLATES

A. Manufacturers:
   1. Burns.
   2. Rockwood.
   3. Don-Jo.

B. Properties:
   1. Plates:
      a. Kick Plates: Provide along bottom edge of push side of each door, where indicated in hardware.
         1) Size: 10 inches high by 2 inches less door width (LDW) on push side of door; or 1 inch LDW on pairs of doors with no mullion.
      b. Mop Plates: Provide along bottom edge of push side of doors to provide protection from cleaning liquids and equipment damage to door surface.
         1) Size: 4 inches high by 1 inch less door width (LDW) on pull side of door.
      c. Edges: Beveled, on four (4) unless otherwise indicated.

C. Grades: Comply with BHMA A156.6.

D. Material: As indicated for each item by BHMA material and finish designation.
   1. Metal Properties: Stainless steel.
      a. Metal, Standard Duty: Thickness 0.050 inch, minimum.

E. Installation:
   1. Fasteners: Countersunk screw fasteners

F. Products:
   1. KP50, MP50.

2.14 STOPS AND HOLDERS

A. Manufacturers:
   1. Burns.
   2. Rockwood.
   3. Don-Jo.

B. General: Provide overhead stop/holder when wall or floor stop is not feasible.

C. Grades:
   1. Door Holders, Wall Bumpers, and Floor Stops: Comply with BHMA A156.16 and Resilient Material Retention Test as described in this standard.

D. Material: Base metal as indicated for each item by BHMA material and finish designation.

E. Types:
   1. Wall Bumpers: Bumper, concave, wall stop.

F. Installation:
   1. Non-Masonry Walls: Confirm adequate wall reinforcement has been installed to allow lasting installation of wall bumpers.

G. Products:
   1. Wall Bumpers. 575

2.15 THRESHOLDS

A. Manufacturers:
   1. National Guard Products, Inc: www.ngpinc.com/#sle.
   2. Reese.
   3. Pemko.

B. Properties:
   1. Threshold Surface: Fluted horizontal grooves across full width.

C. Grades: Thresholds: Comply with BHMA A156.21.

D. Types: As applicable to project conditions. Provide barrier-free type at every location where specified.
   1. Saddle Thresholds: Without thermal break.

E. Products:

2.16 WEATHERSTRIPPING AND GASKETING

A. Manufacturers:
   1. National Guard Products, Inc: www.ngpinc.com/#sle.
   2. Reese.
   3. Pemko.

B. Properties:
   1. Weatherstripping Air Leakage Performance: Not exceeding 0.3 cfm/sq ft of door opening at 0.3 inches of water pressure differential for single doors, and 0.5 cfm/sq ft of door area at 0.3 inches of water pressure differential for double doors for gasketing other than smoke control, as tested according to ASTM E283/E283M; with resilient or flexible seal strips that are easily replaceable and readily available from stocks maintained by manufacturer.
   2. Adhesive-Backed Perimeter Gasketing: Silicone gasket material applied to frame with self- adhesive.
   3. Rigid, Housed, Perimeter Gasketing: Sponge neoprene gasket material held in place by aluminum housing; fastened to frame stop with screws.
   4. Door Sweeps: Silicone gasket material held in place by flat aluminum housing or flange; surface mounted to face of door with screws.
   5. Automatic Door Bottoms: Sponge neoprene gasket material held in place by aluminum housing that automatically drops to form seal when door is closed.
      a. Mounting: Mortised into bottom of door.

C. Grades: Comply with BHMA A156.22.

D. Products:
   1. Weatherstripping: See Door Hardware Schedule.
   2. Door Bottom Seals:
      a. Door Sweeps: See Door Hardware Schedule.
      b. Automatic Door Bottoms: See Door Hardware Schedule.

2.17 MISCELLANEOUS ITEMS

A. Manufacturers:

1. Burns.
2. Rockwood.
3. Don-Jo.

B. Properties:
1. Coat Hooks: Provide on room side of door, screw fastened.
   a. Material: Brass.
2. Silencers: Provide at equal locations on door frame to mute sound of door's impact upon closing.
   a. Single Door: Provide three on strike jamb of frame.
   b. Pair of Doors: Provide two on head of frame, one for each door at latch side.
   c. Material: Rubber, gray color.

C. Products:
1. Coat Hooks.
   a. 604.
2. Silencers.
   a. 500.

2.18 ELECTRIFIED HARDWARE

A. Manufacturers:
1. BEST, dormakaba Group: www.bestaccess.com/#sle.
2. Von Duprin.

B. Properties:
1. Power Transfers: Manufacturer's standard.
   a. Mortised Type with Wires & Connectors:
      1) Listed by UL and ULC.
      2) Stainless steel housing and spring conduit.
      3) Wire Harness: Pre-installed, twelve wire, equipped with ten (10) 24 gauge wires and two 18 gauge wires.
      4) Accommodate 180 degree door swing.
      5) Quick-Connect Plugs: Pre-installed.
2. Wire Harnesses: Of sufficient length, with quick connectors.
   a. Provide wire harness connection from electrified locking hardware to power transfer, and another wire harness connection from power transfer to power supply or junction box.
   b. Provide wire harness with pinned connectors to match connector on electrified locking hardware and power transfer.

C. Products:
1. Wire Harnesses:
   a. WH- Series.

2.19 KEYS AND CORES

A. Manufacturers:
1. Schlage (Existing Everest Restricted SFIC)

B. Properties: Complying with guidelines of BHMA A156.28.
1. Owner provides permanent cores.
2. Install Owner supplied small format interchangeable cores, where required.
3. Keying Schedule: Arrange for a keying meeting, with Architect, Owner and hardware supplier, and other involved parties to ensure locksets and locking hardware, are functionally correct and keying complies with project requirements.
4. Keying: Great Grand Master keyed. Verify specific keying requirements with Owner.

5. Include construction keying and control keying with removable core cylinders.
6. New cores to be keyed to existing key system.
7. Supply keys in following quantities:
   a. Construction Master Keys: 6 each.
   b. Construction Keys: 15 each.
   c. Construction Control Keys: 2 each.
8. Provide key collection envelopes, receipt cards, and index cards in quantity suitable to manage number of keys.
9. Deliver keys with identifying tags to Owner by security shipment direct from manufacturer.
10. Include installation of permanent cores and return construction cores to hardware supplier. Construction cores and keys to remain property of hardware supplier.

C. Products:
   1. Schlage Everest SFIC (Provided by Owner, Installed by Contractor):

2.20 FINISHES

A. Finishes: Identified in Hardware Sets.

PART 3 EXECUTION

3.01 EXAMINATION

A. Verify that doors and frames are ready to receive this work; labeled, fire-rated doors and frames are properly installed, and dimensions are as indicated on shop drawings.

B. Correct all defects prior to proceeding with installation.

C. Verify that electric power is available to power operated devices and of correct characteristics.

3.02 INSTALLATION

A. Install hardware in accordance with manufacturer's instructions and applicable codes.

B. Install hardware using the manufacturer’s fasteners provided. Drill and tap all screw holes located in metallic materials. Do not use “Riv-Nuts” or similar products.

C. Install hardware on fire-rated doors and frames in accordance with applicable codes and NFPA 80.

D. Install hardware for smoke and draft control doors in accordance with NFPA 105.

E. Use templates provided by hardware item manufacturer.

F. Do not install surface mounted items until application of finishes to substrate are fully completed.

G. Wash down masonry walls and complete painting or staining of doors and frames.

H. Complete finish flooring prior to installation of thresholds.

I. Door Hardware Mounting Heights: Distance from finished floor to center line of hardware item. As indicated in following list, unless noted otherwise in Door Hardware Schedule or on drawings.
   1. For Steel Doors and Frames: Install in compliance with DHI (LOCS) recommendations.
   2. For Steel Door Frames: See Section 08 12 13.
   3. For Aluminum-Framed Storefront Doors and Frames: See Section 08 43 13.
   4. For Wood Doors: Install in compliance with DHI WDHS.3 recommendations.
   5. Flush Wood Doors: Section 08 14 16.
   6. Mounting heights in compliance with ADA Standards:
      a. Locksets: 40-5/16 inches.
      b. Push Plates/Pull Bars: 42 inches.

c. Exit Devices: As recommended by manufacturer.

J. Set exterior door thresholds with full-width bead of elastomeric sealant at each point of contact with floor providing a continuous weather seal. Anchor thresholds with stainless steel countersunk screws.

K. Include in installation for existing doors and frames any necessary field modification and field preparation of doors and frames for new hardware. Provide necessary fillers, reinforcements, and fasteners for mounting new hardware and to cover existing door and frame preparations.

3.03 FIELD QUALITY CONTROL

A. Perform field inspection and testing under provisions of Section 01 40 00 - Quality Requirements.

3.04 ADJUSTING

A. Adjust work under provisions of Section 01 70 00 - Execution and Closeout Requirements.

B. Adjust hardware for smooth operation.

C. Adjust gasketing for complete, continuous seal; replace if unable to make complete seal.

3.05 CLEANING

A. Clean finished hardware in accordance with manufacturer's written instructions after final adjustments have been made.

B. Clean adjacent surfaces soiled by hardware installation activities.

C. Replace items that cannot be cleaned to manufacturer's level of finish quality at no additional cost.

D. See Section 01 74 19 - Construction Waste Management and Disposal, for additional requirements.

3.06 PROTECTION

A. Protect finished Work under provisions of Section 01 70 00 - Execution and Closeout Requirements.

B. Do not permit adjacent work to damage hardware or finish.

3.07 HARDWARE SETS

Manufacturer List

Code:	Name:
BES	BEST
PRE	BEST (Precision)
BRN	Burns Manufacturing
DK	dormakaba
DKO	dormakaba Automatics
IVE	Ives
NGP	National Guard Products
RCI	Rutherford Controls, Inc.
VON	Von Duprin

Option List

Code:	Name:
SA	Surface Applied
LD	Less Dogging
996	Standard. Lever Trim
S3	ANSI 4-7/8" Strike
1/4-20 SS MS/EA	1/4-20 Stainless Steel Mach. Screw/Exp Anchor
CD	Cylinder Dogging
57	Surface Three Point Latch
RX	Request to Exit
RP3	Rings for 7 pin cylinder
B4E Heavy	Heavy Bevel Edges
LBR	Less Bottom Rod
QEL	Quiet Electric Latch Retraction
DT	Dummy Trim
HH	Wind and Impact - Hurricane Rated
CSK	Countersunk Holes
LNL	Lever-Night Latch
7090	7090 Pull side mtg bracket
4" ODW	4" Over Door Width
L/C or LC	Less Core
LM	Latch Monitoring
CON	Connectors
C	Quick Connect
LAR	Length As Required
RP	Rim Cylinder Ring
NRP	Non-Removable Pin
47	Concealed Vertical Rod
DEU	Electrically Unlocked

Finish list

Code:	Name:
A	Anodized Aluminum
B	Brown
CL	Clear Anodized
US26D	Satin Chrome
US27	Mill Aluminum
26D	Satin Chrome
32D	Satin Stainless Steel
604	Zinc plated, dichromate sealed
626	Satin chromium plated
630	Satin Stainless Steel
689	Powder-Coated Aluminum

HARDWARE SETS

Set #1 - EXT.ALUM. / CARD READER

Doors: 100A

8	Hinge	FBB199 NRP 45X45	32D	BES
2	Power Transfer	EPT 10		VON
1	Mullion	HH4954	689	VON
1	Exit Device	HH RX QEL 98 57 NL 990 499F CON	US26D	VON
1	Exit Device	HH LD RX 98 57 DT 990 499F CON	US26D	VON
1	Rim Cylinder	12E 7 2 L/C RP	626	BES
1	SFIC	Provided by Owner		
2	Door Closer	EHD90 16 SDS90	689	BES
2	Blade Stop Spacer	BSHD90	689	BES
2	Drop Plate	DP90	689	BES
2	Latch / Rod Guard	RG-27		
1	Gasketing	Provided by Aluminum Door Manufacturer		
1	Threshold	896 S LAR (1/4-20 SS MS/EA)	A	NGP
2	Wire Harness	CON-192P		VON
2	Wire Harness	CON-26P		VON
2	Door Position Switch	Provided by Access Control System Supplier		
1	Power Supply	Provided by Access Control System Supplier		
1	Card Reader	Provided by Access Control System Supplier		

NOTE: Coordinate hardware requirements with Aluminum Manufacturer and Supplier. Operation: Turning key in outside cylinder or presenting valid credential to card reader retracts motorized latch bolt, allowing access through the active leaf. Door Position Switches monitor door status. Request-to-Exit Switches in exit devices are activated upon depressing push pads when exiting, shunting forced door alarm at Access Control System. Free egress is possible at all times through both leaves. Coordinate wiring and electrical requirements with Electrical Contractor, Access Control System Contractor, and Aluminum Door Mfr./Supplier.

Set #2 - EXT.ALUM. / CARD READER

Doors: 100F, 102A

4	Hinge	FBB199 NRP 45X45	32D	BES
1	Power Transfer	EPT 10		VON
1	Exit Device	HH RX QEL 98 NL 990 499F CON	US26D	VON
1	Rim Cylinder	12E 7 2 L/C RP	626	BES
1	SFIC	Provided by Owner		
1	Door Closer	EHD90 16 SDS90	689	BES
1	Blade Stop Spacer	BSHD90	689	BES
1	Drop Plate	DP90	689	BES

1	Gasketing	Provided by Aluminum Door Manufacturer		
1	Threshold	896 S LAR (1/4-20 SS MS/EA)	A	NGP
1	Wire Harness	CON-192P		VON
1	Wire Harness	CON-26P		VON
1	Door Position Switch	Provided by Access Control System Supplier		
1	Power Supply	Provided by Exit Device Supplier		
1	Card Reader	Provided by Access Control System Supplier		

NOTE: Turning key in outside cylinder or presenting valid credential to card reader retracts motorized latch bolt, allowing entry. Door Position Switch monitors door status. Request-to-Exit Switch in exit device is activated upon depressing push pad when exiting, shunting forced door alarm at Access Control System. Free egress is possible at all times. Coordinate wiring and electrical requirements with Electrical Contractor, Access Control System Contractor, and Aluminum Door Mfr./Supplier.

Set #3 - EXT.HM. / CARD READER

Doors: 122

8	Hinge	FBB199 NRP 45X45	32D	BES
1	Power Transfer	EPT-12C		PRE
2	Surface Bolt	SB360	604	IVE
1	Electromechanical Cyl. Lock	9KW 3 7 DEU 14 D S3 3/4" C RQE L/C	626	BES
2	Door Closer	EHD90 16 SDS90	689	BES
2	Kick Plate	KP50 CSK B4E Heavy 10" Door Width less 1"	630	BRN
1	Overlapping Astragal	Provided by Door Manufacturer		
1	Gasketing	127N Head & Jambs (2)	A	NGP
2	Sweep	200S LAR	A	NGP
1	Threshold	425 LAR (10-24 SS MS/LA)	A	NGP
1	Power Supply	Provided by Access Control System Supplier		
2	Door Position Switch	Provided by Access Control System Supplier		
1	Card Reader	Provided by Access Control System Supplier		

NOTE: Turning key in outside cylinder retracts latch bolt. Presenting valid credential to card reader temporarily unlocks outside lever, allowing entry. Door Position Switches monitor door status. Request-to-Exit Switch in lockset is activated upon turning inside lever when exiting, shunting forced door alarm at Access Control System. Free egress is possible at all times through active leaf. Coordinate wiring and electrical requirements with Electrical Contractor and Access Control System Contractor.

Set #4 - EXT.HM. / CARD READER

Doors: 121B, 125

4	Hinge	FBB199 NRP 45X45	32D	BES
1	Power Transfer	EPT-12C		PRE
1	Electromechanical Cyl. Lock	9KW 3 7 DEU 14 D S3 3/4" C RQE L/C	626	BES

1	Door Closer	EHD90 16 SDS90	689	BES
1	Kick Plate	KP50 CSK B4E Heavy 10" Door Width less 2"	630	BRN
1	Gasketing	127N Head & Jambs (2)	A	NGP
1	Sweep	200S LAR	A	NGP
1	Threshold	425 LAR (10-24 SS MS/LA)	A	NGP
1	Drip Cap	16 4" ODW	A	NGP
1	Wiring Harness	WH-192P		BES
1	Wiring Harness	WH-38P		BES
1	Power Supply	Provided by Access Control System Supplier		
1	Door Position Switch	Provided by Access Control System Supplier		
1	Card Reader	Provided by Access Control System Supplier		

NOTE: Turning key in outside cylinder retracts latch bolt. Presenting valid credential to card reader temporarily unlocks outside lever, allowing entry. Door Position Switches monitor door status. Request-to-Exit Switch in lockset is activated upon turning inside lever when exiting, shunting forced door alarm at Access Control System. Free egress is possible at all times through active leaf. Coordinate wiring and electrical requirements with Electrical Contractor and Access Control System Contractor.

Set #5 - EXT.HM. / CARD READER

Doors: 100C

4	Hinge	FBB199 NRP 45X45	32D	BES
1	Power Transfer	EPT 10		VON
1	Exit Device	HH RX QEL 98 NL 990 499F CON	US26D	VON
1	Rim Cylinder	12E 7 2 L/C RP	626	BES
1	SFIC	Provided by Owner		
1	Door Closer	EHD90 16 SDS90	689	BES
1	Kick Plate	KP50 CSK B4E Heavy 10" Door Width less 2"	630	BRN
1	Gasketing	127N Head & Jambs (2)	A	NGP
1	Sweep	200S LAR	A	NGP
1	Drip Cap	16 4" ODW	A	NGP
1	Threshold	425 LAR (10-24 SS MS/LA)	A	NGP
1	Wire Harness	CON-192P		VON
1	Wire Harness	CON-12P		VON
1	Door Position Switch	Provided by Access Control System Supplier		
1	Power Supply	Provided by Access Control System Supplier		
1	Card Reader	Provided by Access Control System Supplier		

NOTE: Turning key in outside cylinder retracts latch bolt. Presenting valid credential to card reader retracts motorized latch bolt, allowing entry. Door Position Switches monitor door status. Request-to-Exit Switch in exit device is activated upon depressing push pad when exiting, shunting forced door alarm at Access Control System. Free egress is possible at all times. Coordinate wiring and electrical requirements with Electrical Contractor and Access Control System Contractor.

Set #6 - INT. / CARD READER

Doors: 121

3	Hinge	FBB168 NRP 45X45	26D	BES
1	Cylindrical Lock	9K 3 7 D 14 D S3 LC	626	BES
1	SFIC	Provided by Owner		
1	Electric Strike	2364	32D	RCI
1	Door Closer	EHD90 16 DS90	689	BES
1	Kick Plate	KP50 CSK B4E Heavy 10" Door Width less 2"	630	BRN
3	Silencer	500	Gray	BRN
1	Power Supply	Provided by Access Control System Supplier		
1	Door Position Switch	Provided by Access Control System Supplier		
1	Card Reader	Provided by Access Control System Supplier		

NOTE: Door normally closed, latched, and locked. Turning key in outside cylinder retracts latch bolt. Presenting valid credential to card reader temporarily releases electric strike, allowing entry. Door Position Switch monitors door status. Electric strike is fail-secure and remains locked during fire alarm or loss of power. Free egress is possible at all times. Coordinate wiring and electrical requirements with Electrical Contractor and Access Control Contractor.

Set #7 - INT. / CARD READER

Doors: 121A

3	Hinge	FBB168 NRP 45X45	26D	BES
1	Cylindrical Lock	9K 3 7 D 14 D S3 LC	626	BES
1	SFIC	Provided by Owner		
1	Electric Strike	2364	32D	RCI
1	Door Closer	EHD90 16 AF90P	689	BES
1	Kick Plate	KP50 CSK B4E Heavy 10" Door Width less 2"	630	BRN
1	Wall Stop	575	630	BRN
3	Silencer	500	Gray	BRN
1	Power Supply	Provided by Access Control System Supplier		
1	Door Position Switch	Provided by Access Control System Supplier		
1	Card Reader	Provided by Access Control System Supplier		

NOTE: Door normally closed, latched, and locked. Turning key in outside cylinder retracts latch bolt. Presenting valid credential to card reader temporarily releases electric strike, allowing entry. Door Position Switch monitors door status. Electric strike is fail-secure and remains locked during fire alarm or loss of power. Free egress is possible at all times. Coordinate wiring and electrical requirements with Electrical Contractor and Access Control Contractor.

Set #8 - INT. / CARD READER

Doors: 231

3	Hinge	FBB168 NRP 45X45	26D	BES
1	Exit Device	CD 98 LNL 996 17 CON	US26D	VON
1	Rim Cylinder	12E 7 2 L/C RP	626	BES
1	Mortise Cylinder	1E 7 4 RP3 L/C	626	BES
1	Electric Strike	0162 LM	32D	RCI
2	SFIC	Provided by Owner		
1	Door Closer	EHD90 16 AF90P	689	BES
1	Kick Plate	KP50 CSK B4E Heavy 10" Door Width less 2"	630	BRN
1	Wall Stop	575	630	BRN
3	Silencer	500	Gray	BRN
1	Door Position Switch	Provided by Access Control System Supplier		
1	Power Supply	Provided by Access Control System Supplier		
1	Card Reader	Provided by Access Control System Supplier		

NOTE: Provide 48" exit device, cut to proper length in field, for doors greater than 36" wide. Operation: Door normally closed, latched, and locked. Turning key in outside cylinder retracts latch bolt. Presenting valid credential to card reader temporarily releases electric strike, allowing entry. Door Position Switch monitors door status. Latch Monitor Switch monitors positive latch engagement with strike. Free egress is possible at all times. Coordinate wiring and electrical requirements with Electrical Contractor and Access Control Contractor.

Set #9 - INT. / CARD READER

Doors: 228, 124

3	Hinge	FBB168 45X45	26D	BES
1	Cylindrical Lock	9K 3 7 D 14 D S3 LC	626	BES
1	SFIC	Provided by Owner		
1	Electric Strike	2364	32D	RCI
1	Door Closer	EHD90 16 IS90	689	BES
1	Kick Plate	KP50 CSK B4E Heavy 10" Door Width less 2"	630	BRN
3	Silencer	500	Gray	BRN
1	Door Position Switch	Provided by Access Control System Supplier		
1	Power Supply	Provided by Access Control System Supplier		
1	Card Reader	Provided by Access Control System Supplier		

NOTE: Door normally closed, latched, and locked. Turning key in outside cylinder retracts latch bolt. Presenting valid credential to card reader temporarily releases electric strike, allowing entry. Door Position Switch monitors door status. Electric strike is fail-secure and remains locked during fire alarm

or loss of power. Free egress is possible at all times. Coordinate wiring and electrical requirements with Electrical Contractor and Access Control Contractor.

Set #10/10A -

Doors: 123 (10), 124B (10A)

3	Hinge	FBB168 NRP 45X45	26D	BES
1	Exit Device	CD 98 LNL 996 17	US26D	VON
1	Rim Cylinder	12E 7 2 L/C RP	626	BES
1	Mortise Cylinder	1E 7 4 RP3 L/C	626	BES
2	SFIC	Provided by Owner		
1	Door Closer	EHD90 16 DS90	689	BES
1	Kick Plate	KP50 CSK B4E Heavy 10" Door Width less 2"	630	BRN
3	Silencer	500	Gray	BRN

NOTE: Provide 48" exit device, cut to length in field, for doors greater than 36" wide.
Group 10A is to be pair of doors w/ 6 hinges, 6 silencers, 2 exit devices, closers, and kickplates; remainder of group is the same as 10

Set #11 - INT. / CARD READER

Doors: 227, 118, 118A

3	Hinge	FBB168 NRP 45X45	26D	BES
1	Exit Device	CD 98 LNL 996 17	US26D	VON
1	Rim Cylinder	12E 7 2 L/C RP	626	BES
1	Mortise Cylinder	1E 7 4 RP3 L/C	626	BES
1	Electric Strike	0162 LM	32D	RCI
1	SFIC	Provided by Owner		
1	Door Closer	EHD90 16 AF90P	689	BES
1	Kick Plate	KP50 CSK B4E Heavy 10" Door Width less 2"	630	BRN
1	Wall Stop	575	630	BRN
1	Gasketing	5050 Head & Jambs (2)	B	NGP
1	Door Position Switch	Provided by Access Control System Supplier		
1	Power Supply	Provided by Access Control System Supplier		
1	Card Reader	Provided by Access Control System Supplier		

NOTE: Door normally closed, latched, and locked. Turning key in outside cylinder retracts latch bolt. Presenting valid credential to card reader temporarily releases electric strike, allowing entry. Door Position Switch monitors door status. Latch Monitor Switch monitors positive latch engagement with electric strike. Free egress is possible at all times. Coordinate wiring and electrical requirements with Electrical Contractor and Access Control Contractor.

Set #12 - INT. / CARD READER

Doors: 222, 230C, 111

3	Hinge	FBB179 45X45	26D	BES
1	Cylindrical Lock	9K 3 7 D 14 D S3 LC	626	BES
1	SFIC	Provided by Owner		
1	Door Closer	EHD90 16 AF90	689	BES
1	Kick Plate	KP50 CSK B4E Heavy 10" Door Width less 2"	630	BRN
1	Wall Stop	575	630	BRN
3	Silencer	500	Gray	BRN
1	Door Position Switch	Provided by Access Control System Supplier		
1	Power Supply	Provided by Access Control System Supplier		
1	Card Reader	Provided by Access Control System Supplier		

NOTE: Door normally closed, latched, and locked. Turning key in outside cylinder retracts latch bolt. Presenting valid credential to card reader temporarily releases electric strike, allowing entry. Door Position Switch monitors door status. Free egress is possible at all times. Coordinate wiring and electrical requirements with Electrical Contractor and Access Control Contractor.

Set #13 -

Doors: 109

3	Hinge	FBB168 45X45	26D	BES
1	Cylindrical Lock	9K 3 7 R 14 D S3 LC	626	BES
1	SFIC	Provided by Owner		
1	Door Closer	EHD90 16 AF90	689	BES
1	Kick Plate	KP50 CSK B4E Heavy 10" Door Width less 2"	630	BRN
1	Mop Plate	MP50 CSK B4E Heavy 4" Door Width less 1"	630	BRN
1	Wall Stop	575	630	BRN
3	Silencer	500	Gray	BRN

Set #14 - INT. / CARD READER

Doors: 227A

3	Hinge	FBB168 NRP 45X45	26D	BES
1	Exit Device	CD 98 LNL 996 17	US26D	VON
1	Rim Cylinder	12E 7 2 L/C RP	626	BES
1	Mortise Cylinder	1E 7 4 RP3 L/C	626	BES
2	SFIC	Provided by Owner		
1	Door Closer	EHD90 16 DS90	689	BES

1	Kick Plate	KP50 CSK B4E Heavy 10" Door Width less 2"	630	BRN
3	Silencer	500	Gray	BRN
1	Power Supply	Provided by Access Control System Supplier		
1	Door Position Switch	Provided by Access Control System Supplier		
1	Card Reader	Provided by Access Control System Supplier		

NOTE: Door normally closed, latched, and locked. Turning key in outside cylinder retracts latch bolt. Presenting valid credential to card reader temporarily releases electric strike, allowing entry. Door Position Switch monitors door status. Latch Monitor Switch in electric strike monitors positive latch engagement with strike. Electric strike is fail-secure and remains locked during fire alarm or loss of power. Free egress is possible at all times. Coordinate wiring and electrical requirements with Electrical Contractor and Access Control Contractor.

Set #15 - INT. / CARD READER

Doors: 231B

3	Hinge	FBB179 NRP 45X45	26D	BES
1	Cylindrical Lock	9K 3 7 D 14 D S3 LC	626	BES
1	SFIC	Provided by Owner		
1	Electric Strike	2364	32D	RCI
1	Door Closer	EHD90 16 DS90	689	BES
1	Kick Plate	KP50 CSK B4E Heavy 10" Door Width less 2"	630	BRN
3	Silencer	500	Gray	BRN
1	Power Supply	Provided by Access Control System Supplier		
1	Door Position Switch	Provided by Access Control System Supplier		
1	Card Reader	Provided by Access Control System Supplier		

NOTE: Door normally closed, latched, and locked. Turning key in outside cylinder retracts latch bolt. Presenting valid credential to card reader temporarily releases electric strike, allowing entry. Door Position Switch monitors door status. Electric strike is fail-secure and remains locked during fire alarm or loss of power. Free egress is possible at all times. Coordinate wiring and electrical requirements with Electrical Contractor and Access Control Contractor.

Set #16 - INT.ALUM. / CARD READER

Doors: 202, 102

3	Hinge	FBB168 NRP 45X45	26D	BES
1	Exit Device	CD 98 LNL 996 17	US26D	VON
1	Rim Cylinder	12E 7 2 L/C RP	626	BES
1	Mortise Cylinder	1E 7 4 RP3 L/C	626	BES
1	Electric Strike	0162 LM	32D	RCI
2	SFIC	Provided by Owner		

1	Door Closer	EHD90 16 DS90	689	BES
1	Blade Stop Spacer	BSHD90	689	BES
1	Drop Plate	DP90	689	BES
1	Gasketing	Provided by Aluminum Door Manufacturer		
1	Wiring Harness	WH-192P		BES
1	Wiring Harness	WH-12P		BES
1	Power Supply	Provided by Access Control System Supplier		
1	Door Position Switch	Provided by Access Control System Supplier		
1	Card Reader	Provided by Access Control System Supplier		

NOTE: Door normally closed, latched, and locked. Turning key in outside cylinder retracts latch bolt. Presenting valid credential to card reader temporarily releases electric, allowing entry. Door Position Switch monitors door status. Latch Monitor Switch in electric strike monitors positive latch engagement with strike. Electric strike is fail-secure and remains locked during fire alarm or loss of power. Free egress is possible at all times. Coordinate wiring and electrical requirements with Electrical Contractor and Access Control Contractor.

Set #17 - INT.ALUM. / CARD READER

Doors: 229, 200A, 102B, 119, 120

3	Hinge	FBB168 NRP 45X45	26D	BES
1	Exit Device	CD 98 LNL 996 17	US26D	VON
1	Rim Cylinder	12E 7 2 L/C RP	626	BES
1	Mortise Cylinder	1E 7 4 RP3 L/C	626	BES
1	Electric Strike	0162 LM	32D	RCI
2	SFIC	Provided by Owner		
1	Door Closer	EHD90 16 AF90P	689	BES
1	Blade Stop Spacer	BSHD90	689	BES
1	Drop Plate	DP90	689	BES
1	Gasketing	Provided by Aluminum Door Manufacturer		
1	Wall Stop	575	630	BRN
1	Power Supply	Provided by Access Control System Supplier		
1	Door Position Switch	Provided by Access Control System Supplier		
1	Card Reader	Provided by Access Control System Supplier		

NOTE: Template door closers for 180 degree swing at doors 119 and 120 as indicated on floor plan. Operation: Door normally closed, latched, and locked. Turning key in outside cylinder retracts latch bolt. Presenting valid credential to card reader temporarily releases electric strike, allowing entry. Door Position Switch monitors door status. Latch Monitor Switch monitors positive latch engagement with strike. Electric strike is fail-secure and remains locked during fire alarm or loss of power. Free egress is possible at all times. Coordinate wiring and electrical requirements with Electrical Contractor and Access Control Contractor.

Set #18 - INT.ALUM. / CARD READER

Doors: 203, 204, 205, 206, 207, 208, 209, 210, 211, 212, 213, 214, 215, 216, 217, 230A, 230B, 103, 104, 105, 106, 112, 113, 114

3	Hinge	FBB179 45X45	26D	BES
1	Cylindrical Lock	9K 3 7 D 14 D S3 LC	626	BES
1	SFIC	Provided by Owner		
1	Electric Strike	2364	32D	RCI
1	Wall Stop	575	630	BRN
1	Gasketing	Provided by Aluminum Door Manufacturer		
1	Power Supply	Provided by Access Control System Supplier		
1	Door Position Switch	Provided by Access Control System Supplier		
1	Card Reader	Provided by Access Control System Supplier		

NOTE: Door normally closed, latched, and locked. Turning key in outside cylinder retracts latch bolt. Presenting valid credential to card reader temporarily releases electric strike, allowing entry. Door Position Switch monitors door status. Electric strike is fail-secure and remains locked during fire alarm or loss of power. Free egress is possible at all times. Coordinate wiring and electrical requirements with Electrical Contractor and Access Control Contractor.

Set #19 - INT.ALUM. / CARD READER

Doors: 108

3	Hinge	FBB179 45X45	26D	BES
1	Cylindrical Lock	9K 3 7 D 14 D S3 LC	626	BES
1	SFIC	Provided by Owner		
1	Electric Strike	2364	32D	RCI
1	Door Closer	EHD90 16 PH90	689	BES
1	Wall Stop	575	630	BRN
1	Gasketing	Provided by Aluminum Door Manufacturer		
1	Power Supply	Provided by Access Control System Supplier		
1	Door Position Switch	Provided by Access Control System Supplier		
1	Card Reader	Provided by Access Control System Supplier		

NOTE: Door normally closed, latched, and locked. Turning key in outside cylinder retracts latch bolt. Presenting valid credential to card reader temporarily releases electric strike, allowing entry. Door Position Switch monitors door status. Electric strike is fail-secure and remains locked during fire alarm or loss of power. Free egress is possible at all times. Coordinate wiring and electrical requirements with Electrical Contractor and Access Control Contractor.

Set #20 - INT.ALUM. / CARD READER

Doors: 108A

3	Hinge	FBB179 45X45	26D	BES
1	Cylindrical Lock	9K 3 7 D 14 D S3 LC	626	BES
1	SFIC	Provided by Owner		
1	Electric Strike	2364	32D	RCI
1	Door Closer	EHD90 16 ISH90	689	BES
1	Wall Stop	575	630	BRN
1	Gasketing	Provided by Aluminum Door Manufacturer		
1	Power Supply	Provided by Access Control System Supplier		
1	Door Position Switch	Provided by Access Control System Supplier		
1	Card Reader	Provided by Access Control System Supplier		

NOTE: Door normally closed, latched, and locked. Turning key in outside cylinder retracts latch bolt. Presenting valid credential to card reader temporarily releases electric strike, allowing entry. Door Position Switch monitors door status. Electric strike is fail-secure and remains locked during fire alarm or loss of power. Free egress is possible at all times. Coordinate wiring and electrical requirements with Electrical Contractor and Access Control Contractor.

Set #22 - INT.ALUM. / CARD READER

Doors: 230

3	Hinge	FBB168 NRP 45X45	26D	BES
1	Cylindrical Lock	9K 3 7 D 14 D S3 LC	626	BES
1	Electric Strike	2364	32D	RCI
1	Door Closer	EHD90 16 AF90P	689	BES
1	Blade Stop Spacer	BSHD90	689	BES
1	SFIC	Provided by Owner		
1	Wall Stop	575	630	BRN
1	Gasketing	Provided by Aluminum Door Manufacturer		
1	Power Supply	Provided by Access Control System Supplier		
1	Door Position Switch	Provided by Access Control System Supplier		
1	Card Reader	Provided by Access Control System Supplier		

NOTE: Template door closer for 180 degree swing, where indicated on floor plan. Operation: Door normally closed, latched, and locked. Turning key in outside cylinder retracts latch bolt. Presenting valid credential to card reader temporarily releases electric strike, allowing entry. Door Position Switch monitors door status. Free egress is possible at all times. Coordinate wiring and electrical requirements with Electrical Contractor and Access Control Contractor.

Set #23 - INT.ALUM.

Doors: 218, 229F, 229G

3	Hinge	FBB179 45X45	26D	BES
1	Cylindrical Lock	9K 3 7 R 14 D S3 LC	626	BES
1	SFIC	Provided by Owner		
1	Door Closer	EHD90 16 AF90	689	BES
1	Wall Stop	575	630	BRN
1	Gasketing	Provided by Aluminum Door Manufacturer		

Set #24 – INT.ALUM.

Doors: 231C, 231D, 231E, 231F

3	Hinge	FBB179 45X45	26D	BES
1	Cylindrical Lock	9K 3 0 N 14 D S3	626	BES
1	Wall Stop	575	630	BRN
1	Gasketing	Provided by Aluminum Door Manufacturer		

Set #25 –

Doors: 100D, 101

6	Hinge	FBB168 NRP 45X45	26D	BES
2	Exit Device	CD 98 47 L LBR 996 17	US26D	VON
2	Rim Cylinder	12E 7 2 L/C RP	626	BES
2	Mortise Cylinder	1E 7 4 RP3 L/C	626	BES
4	SFIC	Provided by Owner		
2	Door Closer	EHD90 16 PH90	689	BES
2	Kick Plate	KP50 CSK B4E Heavy 10" Door Width less 1"	630	BRN
2	Wall Stop	575	630	BRN
2	Silencer	500	Gray	BRN

NOTE: Provide 48" exit device for doors more than 3'0" wide.

Set #26 -

Doors: 100E

3	Hinge	FBB168 NRP 45X45	26D	BES
1	Exit Device	CD 98 L 996 17	US26D	VON
1	Rim Cylinder	12E 7 2 L/C RP	626	BES

1	Mortise Cylinder	1E 7 4 RP3 L/C	626	BES
2	SFIC	Provided by Owner		
1	Door Closer	EHD90 16 AF90	689	BES
1	Wall Stop	575	630	BRN
3	Silencer	500	Gray	BRN

Set #27 -

Doors: 100B

3	Hinge	FBB168 NRP 45X45	26D	BES
1	Exit Device	CD 98 L 996 17	US26D	VON
1	Rim Cylinder	12E 7 2 L/C RP	626	BES
1	Mortise Cylinder	1E 7 4 RP3 L/C	626	BES
2	SFIC	Provided by Owner		
1	Door Closer	EHD90 16 AF90P	689	BES
1	Kick Plate	KP50 CSK B4E Heavy 10" Door Width less 2"	630	BRN
1	Wall Stop	575	630	BRN
3	Silencer	500	Gray	BRN

Set #28 -

Doors: 229B, 229E, 229H, 229I, 229I-A, 229L

3	Hinge	FBB168 45X45	26D	BES
1	Cylindrical Lock	9K 3 0 N 14 D S3	626	BES
1	Kick Plate	KP50 CSK B4E Heavy 10" Door Width less 2"	630	BRN
1	Wall Stop	575	630	BRN
3	Silencer	500	Gray	BRN
1	Coat Hook	604		

Set #29 -

Doors: 229A

3	Hinge	FBB168 45X45	26D	BES
1	Cylindrical Lock	9K 3 0 L 14 D S3	626	BES
1	Overhead Stop	90 2 S 7090	626	DK
3	Silencer	500	Gray	BRN
1	Coat Hook	604		

Set #30 -

Doors: 223, 107

3	Hinge	FBB179 45X45	26D	BES
1	Cylindrical Lock	9K 3 7 R 14 D S3 LC	626	BES
1	SFIC	Provided by Owner		
1	Door Closer	EHD90 16 AF90	689	BES
1	Kick Plate	KP50 CSK B4E Heavy 10" Door Width less 2"	630	BRN
3	Silencer	500	Gray	BRN
1	Wall Stop	575	630	BRN

Set #31 -

Doors: 109A

3	Hinge	FBB179 45X45	26D	BES
1	Cylindrical Lock	9K 3 7 R 14 D S3 LC	626	BES
1	SFIC	Provided by Owner		
1	Door Closer	EHD90 16 PH90	689	BES
1	Kick Plate	KP50 CSK B4E Heavy 10" Door Width less 2"	630	BRN
1	Gasketing	5050 Head & Jambs (2)	B	NGP
1	Automatic Door Bottom	423N 36"	US27	NGP
1	Wall Stop	575	630	BRN

Set #32 -

Doors: 200C, 201

6	Hinge	FBB168 NRP 45X45	26D	BES
2	Exit Device	CD 98 47 L LBR 996 17	US26D	VON
2	Rim Cylinder	12E 7 2 L/C RP	626	BES
2	Mortise Cylinder	1E 7 4 RP3 L/C	626	BES
4	SFIC	Provided by Owner		
1	Door Closer	EHD90 16 PH90	689	BES
2	Kick Plate	KP50 CSK B4E Heavy 10" Door Width less 1"	630	BRN
2	Silencer	500	Gray	BRN
2	Wall Stop	575	630	BRN

Set #33 -

Doors: 200

3	Hinge	FBB168 NRP 45X45	26D	BES
1	Exit Device	CD 98 L 996 17	US26D	VON

1	Rim Cylinder	12E 7 2 L/C RP	626	BES
1	Mortise Cylinder	1E 7 4 RP3 L/C	626	BES
2	SFIC	Provided by Owner		
1	Door Closer	EHD90 16 AF90P	689	BES
1	Kick Plate	KP50 CSK B4E Heavy 10" Door Width less 2"	630	BRN
1	Wall Stop	575	630	BRN
3	Silencer	500	Gray	BRN

Set #34 -

Doors: 225

3	Hinge	FBB179 45X45	26D	BES
1	Cylindrical Lock	9K 3 7 D 14 D S3 LC	626	BES
1	SFIC	Provided by Owner		
1	Door Closer	EHD90 16 AF90	689	BES
1	Kick Plate	KP50 CSK B4E Heavy 10" Door Width less 2"	630	BRN
1	Mop Plate	MP50 CSK B4E Heavy 4" Door Width less 1"	630	BRN
3	Silencer	500	Gray	BRN
1	Wall Stop	575	630	BRN

Set #35 -

Doors: 116

3	Hinge	FBB179 NRP 45X45	26D	BES
1	Cylindrical Lock	9K 3 7 D 14 D S3 LC	626	BES
1	SFIC	Provided by Owner		
1	Door Closer	EHD90 16 DS90	689	BES
1	Kick Plate	KP50 CSK B4E Heavy 10" Door Width less 2"	630	BRN
3	Silencer	500	Gray	BRN

Set #36 -

Doors: 220, 221, 110

3	Hinge	FBB179 45X45	26D	BES
1	Cylindrical Lock	9K 3 0 L 14 D S3	626	BES
1	Door Closer	EHD90 16 AF90	689	BES
1	Kick Plate	KP50 CSK B4E Heavy 10" Door Width less 2"	630	BRN
1	Mop Plate	MP50 CSK B4E Heavy 4" Door Width less 1"	630	BRN
1	Wall Stop	575	630	BRN
1	Gasketing	5050 Head & Jambs (2)	B	NGP

Set #37 -

Doors: 219

3	Hinge	FBB179 45X45	26D	BES
1	Pull Plate	5410	630	BRN
1	Push Plate	54	630	BRN
1	Door Closer	EHD90 16 AF90	689	BES
1	Kick Plate	KP50 CSK B4E Heavy 10" Door Width less 2"	630	BRN
1	Wall Stop	575	630	BRN
3	Silencer	500	Gray	BRN

Set #38 -

Doors: 224, 226, 115, 117

3	Hinge	FBB168 45X45	26D	BES
1	Automatic Operator	ED50LE Push	CL	DKO
2	Actuator	910TC-HC		RCI
1	Pull Plate	5410	630	BRN
1	Push Plate	54	630	BRN
1	Kick Plate	KP50 CSK B4E Heavy 10" Door Width less 2"	630	BRN
3	Silencer	500	Gray	BRN

NOTE: Both actuator switches are enabled at all times. Activating either inside or outside actuator switch signals automatic operator to open door, allowing hands-free ingress or egress. Coordinate templating requirements with manufacturers for automatic operator and overhead stop to avoid potential hardware conflict.

Set #39 - OVERHEAD DOOR

Doors: 124A

1	Card Reader	Provided by Access Control System Supplier

NOTE: Hardware provided by Overhead Door Manufacturer / Supplier. Card Reader and other access control components provided by Access Control System Supplier.

Set #40 -

Doors: 231G-A

3	Hinge	FBB179 45X45	26D	BES
1	Cylindrical Lock	9K 3 0 N 14 D S3	626	BES
1	Door Closer	EHD90 16 IS90	689	BES
1	Kick Plate	KP50 CSK B4E Heavy 10" Door Width less 2"	630	BRN
3	Silencer	500	Gray	BRN

Set #41 -

Doors: 200B

3	Hinge	FBB168 NRP 45X45	26D	BES
1	Exit Device	CD 98 L 996 17	US26D	VON
1	Rim Cylinder	12E 7 2 L/C RP	626	BES
1	Mortise Cylinder	1E 7 4 RP3 L/C	626	BES
2	SFIC	Provided by Owner		
1	Door Closer	EHD90 16 IS90	689	BES
3	Silencer	500	Gray	BRN

Set #42 - EXT.ALUM. / CARD READER + AUTO + BOLLARD

Doors: 100

8	Hinge	FBB199 NRP 45X45	32D	BES
2	Power Transfer	EPT 10		VON
1	Mullion	HH4954	689	VON
1	Exit Device	HH RX QEL 98 57 NL 990 499F CON	US26D	VON
1	Exit Device	HH LD RX 98 57 DT 990 499F CON	US26D	VON
1	Rim Cylinder	12E 7 2 L/C RP	626	BES
2	Automatic Operator	ED100LE TW SA 220 FH SE0	CL	DKO
1	Actuator	912N-WBT-R-HC		RCI
1	Actuator	910TC-HC		RCI
1	SFIC	Provided by Owner		
2	Blade Stop Spacer	BSHD90	689	BES
2	Drop Plate	DP90	689	BES
2	Latch / Rod Guard	RG-27		
1	Gasketing	Provided by Aluminum Door Manufacturer		

1	Threshold	896 S LAR (1/4-20 SS MS/EA)	A	NGP
2	Door Position Switch	Provided by Access Control System Supplier		
2	Wire Harness	CON-192P		VON
2	Wire Harness	CON-26P		VON
1	Power Supply	Provided by Access Control System Supplier		
1	Card Reader	Provided by Access Control System Supplier		
1	Bollard	B-6SQ-AT-32D-SM-SQ12		

NOTE: Coordinate hardware requirements with Aluminum Manufacturer and Supplier. Operation: Turning key in outside cylinder or presenting valid credential to card reader retracts motorized latch bolt and enables outside actuator switch, allowing hands-free or manual access through the active leaf. Inside actuator switch is always enabled. Activating inside actuator switch retracts motorized latch bolt, then automatic operator opens the door, allowing hands-free exiting. Door Position Switches monitor door status. Request-to-Exit Switches in exit devices are activated upon depressing push pads when exiting, shunting forced door alarm at Access Control System. Free manual egress is possible at all times through both leaves. Coordinate wiring and electrical requirements with Electrical Contractor, Access Control System Contractor, Automatic Operator Installer, and Aluminum Door Manufacturer/Supplier.

Set #43 –

Doors: 118B, 227B

3	Hinge	FBB179 45X45 NRP	26D	BES
1	Cylindrical Lock	9K 3 0 R 14 D S3	626	BES
1	Wall Stop	575	630	BRN
3	Silencer	500	Gray	BRN

Set #44 -

Doors: 231G

3	Hinge	FBB168 NRP 45X45	26D	BES
1	Cylindrical Lock	9K 3 7 R 14 D S3 LC	626	BES
1	SFIC	Provided by Owner		
1	Door Closer	EHD90 16 AF90P	689	BES
1	Kick Plate	KP50 CSK B4E Heavy 10" Door Width less 2"	630	BRN
1	Wall Stop	575	630	BRN
3	Silencer	500	Gray	BRN

Set #45 -

Doors: 229C, 229D, 229J, 229K

3	Hinge	FBB179 45X45	26D	BES
1	Cylindrical Lock	9K 3 0 R 14 D S3	626	BES
1	Wall Stop	575	630	BRN
3	Silencer	500	Gray	BRN

OPENING LIST:

DOOR #	SET #	FIRE RATING
100	42	
100A	1	
100B	27	
100C	5	
100D	25	
100E	26	
100F	2	
101	25	
102	16	
102A	2	
102B	17	
103	18	
104	18	
105	18	
106	18	
107	30	
108	19	
108A	20	
109	13	
109A	31	
110	36	
111	12	
112	18	
113	18	
114	18	
115	38	
116	35	
117	38	
118	11	
118A	11	
118B	43	
119	17	
120	17	
121	6	
121A	7	
121B	4	
122	3	
123	10	
124	9	
124A	39	
124B		
125	4	
200	33	
200A	17	
200B	41	
200C	32	

201	32
202	16
203	18
204	18
205	18
206	18
207	18
208	18
209	18
210	18
211	18
212	18
213	18
214	18
215	18
216	18
217	18
218	23
219	37
220	36
221	36
222	12
223	30
224	38
225	34
226	38
227	11
227A	14
227B	43
228	9
229	16
229A	29
229B	28
229C	45
229D	45
229E	28
229F	23
229G	23
229H	28
229I	28
229I-A	28
229J	45
229K	45
229L	28
230	22
230A	18
230B	18

230C	12
231	8
231B	15
231C	24
231D	24
231E	24
231F	24
231G	44
231G-A	40

END OF SECTION 08 71 00

Section 08800: Glazing

PART 1 - GENERAL

1.1 RELATED DOCUMENTS

A. Drawings and general provisions of Contract, including General and Supplementary Conditions apply to work of this section.

1.2 DELIVERY, STORAGE AND HANDLING

A. Protect glass and glazing materials during delivery, storage and handling to comply with manufacturer's directions and as required to prevent edge damage to glass, and damage to glass and glazing materials from effects of moisture including condensation, of temperature changes, of direct exposure to sun, and from other causes.

1.3 PROJECT CONDITIONS

A. Environmental Conditions: Do not proceed with glazing when ambient and substrate temperature conditions are outside the limits permitted by glazing material manufacturer or when joint substrates are wet due to rain, frost, condensation or other causes. Install liquid sealants at ambient and substrate temperatures above 40 deg. F (4.4 deg. C).

PART 2 - PRODUCTS

2.1 GLASS PRODUCTS, GENERAL

A. Primary Glass Standard: Provide primary glass which complies with ASTM C 1036 requirements, including those indicated by reference to type, class, quality, and, if applicable, form, finish, mesh and pattern.

B. Heat-Treated Glass Standard: Provide heat-treated glass which complies with ASTM C1048 requirements, including those indicated by reference to kind, condition, type, quality, class, and if applicable, form, finish and pattern.

C. Sizes: Fabricate glass to sizes required for glazing openings indicated, with edge clearances and tolerances complying with recommendations of glass manufacturer. Provide thicknesses indicated or, of not otherwise indicated, as recommended by glass manufacturer for application indicated.

2.2 GLASS PRODUCTS:

A. Basis of Design: **Solarban 70 (2) Optigray + Clear (1-5/16 Insulated / Impact)**

2.3 GLAZING GASKETS

A. Lock-Strip Gaskets: Neoprene extrusions of size and shape indicated, fabricated into frames with molded corner units and zipper lock strips, complying with ASTM C542; black.

B. Dense Elastomeric Compression Seal Gaskets: Molded or extruded gaskets of EPDM complying with ASTM C 864, of profile and hardness required to maintain watertight seal.

C. Cellular Elastomeric Preformed Gaskets: Extruded or molded closed cell, integral-skinned

neoprene of profile and hardness required to maintain watertight seal; complying with ASTM C509, Type II; black.

2.4 MISCELLANEOUS GLAZING MATERIALS

A. Compatibility: Provide materials with proven record of compatibility with surfaces contacted in installation.

B. Cleaners, Primers and Sealers: Type recommended by sealant or gasket manufacturer.

C. Setting Blocks: Neoprene, EPDM or silicone blocks as required for compatibility with glazing sealants, 80 to 90 Shore A durometer hardness.

D. Spacers: Neoprene, EPDM or silicone blocks, or continuous extrusions, as required for compatibility with glazing sealant, of size, shape and hardness recommended by glass and sealant manufacturers for application indicated.

E. Edge Blocks: Neoprene, EPDM or silicone blocks as required for compatibility with glazing sealant, of size and hardness required to limit lateral movement (side-walking) of glass.

PART 3 - EXECUTION

3.1 EXAMINATION

A. Require Glazier to inspect work of glass framing erector for compliance with manufacturing and installation tolerances, including those for size, squareness, offsets at corners; for presence and functioning of weep system; for existence of minimum required face or edge clearances; and for effective sealing of joinery. Obtain Glazier's written report listing conditions detrimental to performance of glazing work. Do not allow glazing work to proceed until unsatisfactory conditions have been corrected.

3.2 PREPARATION

A. Clean glazing channels and other framing members to receive glass, immediately before glazing. Remove coatings which are not firmly bonded to substrates. Remove lacquer from metal surfaces where elastomeric sealants are indicated for use.

3.3 GLAZING, GENERAL

A. Comply with combined printed recommendations of glass manufacturers, of manufacturers of sealants, gaskets and other glazing materials, except where more stringent requirements are indicated, including those of referenced glazing standards.

B. Glazing channel dimensions are required to provide for necessary bite on glass, minimum edge and face clearances, and adequate sealant thickness, with reasonable tolerances. Adjust as required by job conditions at time of installation.

C. Protect glass from edge damage during handling and installation; use a rolling block in rotating glass units to prevent damage to glass corners. Do not impact glass with metal framing. Use suction cups to shift glass units within openings; do not raise or drift glass with a pry bar. Rotate glass with flares or bevels along one horizontal edge which would occur in vicinity of setting blocks so that these are located at top of opening. Remove from

project and dispose of glass units with edge damage or other imperfections of kind that, when installed, weakens glass and impairs performance and appearance.

D. Apply primers to joint surfaces where required for adhesion of sealants, as determined by preconstruction sealant-substrate testing.

3.4 GLAZING

A. Install setting blocks of proper size in sill rabbet, located one quarter of glass width from each corner, but with edge nearest corner not closer than 6" from corner unless otherwise required. Set blocks in thin course of sealant which is acceptable for heel bead use.

B. Provide spacers inside and out, of correct size and spacing to preserve required face clearances, for glass sizes larger than 50 united inches (length plus height), except where gaskets or glazing tapes with continuous spacer rods are used for glazing. Provide applicable minimum bite of spacers on glass and use thickness equal to sealant width, except with sealant tape use thickness slightly less than final compressed thickness of tape.

C. Provide edge blocking to comply with requirements of referenced glazing standard, except where otherwise required by glass unit manufacturer.

D. Set units of glass with uniformity of pattern, draw, bow and similar characteristics.

E. Provide compressible filler rods or equivalent back-up material, as recommended by sealant and glass manufacturers, to prevent sealant from extruding into glass channel weep systems and from adhering to joints back surface as well as to control depth of sealant for optimum performance, unless otherwise indicated.

F. Force sealants into glazing channels to eliminate voids and to ensure complete "wetting" or bond of sealant to glass and channel surfaces.

G. Tool exposed surfaces of sealants to provide a substantial "wash" away from glass. Install pressurized tapes and gaskets to protrude slightly out of channel, so as to eliminate dirt and moisture pockets.

H. Where wedge-shaped gaskets are driven into one side of channel to pressurize sealant or gasket on opposite side, provide adequate anchorage to ensure that gasket will not "walk" out when installation is subjected to movement.

I. Miter cut wedge-shaped gaskets at corners and install gaskets in manner recommended by gasket manufacturer to prevent pull away at corners; seal corner joints and butt joints with sealant recommended by gaskets manufacturer.

3.5 PROTECTING AND CLEANING

A. Protect exterior glass from breakage immediately upon installation by use of crossed streamers attached to framing and held away from glass. Do not apply markers to surfaces of glass. Remove nonpermanent labels and clean surfaces.

B. Protect glass from contact with contaminating substances resulting from construction operations. If, despite such protection, contaminating substances do come into contact with glass, remove immediately by method recommended by glass manufacturer.

C. Examine glass surfaces adjacent to or below exterior concrete and other masonry surfaces

at frequent intervals during construction, but not less often than once a month, for build-up of dirt, scum, alkali deposits or staining. When examination reveals presence of these forms of residue, remove by method recommended by glass manufacturer.

D. Remove and replace glass which is broken, chipped, cracked, abraded or damaged in other ways during construction period, including natural causes, accidents and vandalism.

E. Wash glass on both faces not more than 4 days prior to date scheduled for inspections intended to establish date of substantial completion in each area of project. Wash glass by method recommended by glass manufacturer.

END OF SECTION 08800

SECTION 089119 - FIXED LOUVERS

PART 1 - GENERAL

1.1 SUMMARY

A. Section includes fixed, **extruded-aluminum and formed-metal** louvers.

1.2 ACTION SUBMITTALS

A. Product Data: For each type of product.

1. For louvers specified to bear AMCA seal, include printed catalog pages showing specified models with appropriate AMCA Certified Ratings Seals.

B. Shop Drawings: For louvers and accessories. Include plans, elevations, sections, details, and attachments to other work. Show frame profiles and blade profiles, angles, and spacing.

C. Samples: For each type of metal finish required.

D. Delegated-Design Submittal: For louvers indicated to comply with structural performance requirements, including analysis data signed and sealed by State of Florida Registered Professional Engineer responsible for their preparation.

1.3 INFORMATIONAL SUBMITTALS

A. Product Test Reports: Based on tests performed according to AMCA 500-L.

PART 2 - PRODUCTS

2.1 PERFORMANCE REQUIREMENTS

A. Delegated Design: Design louvers, including comprehensive engineering analysis by a State of Florida Registered Professional Engineer, using structural **and seismic** performance requirements and design criteria indicated.

B. Structural Performance: Louvers shall withstand the effects of gravity loads and the following loads and stresses within limits and under conditions indicated without permanent deformation of louver components, noise or metal fatigue caused by louver-blade rattle or flutter, or permanent damage to fasteners and anchors. Wind pressures shall be considered to act normal to the face of the building.

1. Wind Loads: Determine loads based on pressures as indicated on Drawings.

2.2 FIXED, EXTRUDED-ALUMINUM LOUVERS

A. Horizontal, Drainable-Blade Louver

B. Manufacturer's
1. Architectural Louvers
2. Construction Specialties

C. Louver Design Criteria
1. Louver Depth: **6 inches (150 mm)**.
2. Frame and Blade Nominal Thickness: Not less than **0.080 inch (2.03 mm) for frames**.
3. Mullion Type: Exposed.
4. Louver Performance Ratings:

    a. Free Area: Refer to mechanical drawings for free area requirement.
    b. Point of Beginning Water Penetration: Not less than **950 fpm (4.8 m/s)**.
    c. Air Performance: Not more than **750-fpm (3.8-m/s)** to **850-fpm (4.3-m/s)** free-area **exhaust/ intake** velocity.

5. AMCA Seal: Mark units with AMCA Certified Ratings Seal.

2.3 LOUVER SCREENS

A. General: Provide screen at **each exterior louver**.

1. Screen Location for Fixed Louvers: Interior face.
2. Screening Type: Bird screening.

B. Louver Screen Frames: Same type and form of metal as indicated for louver to which screens are attached.

C. Louver Screening for Aluminum Louvers:

1. Bird Screening: Aluminum, 1/2-inch- (13-mm-) square mesh, 0.063-inch (1.60-mm) wire.

2.4 MATERIALS

A. Aluminum Extrusions: ASTM B 221 (ASTM B 221M), Alloy 6063-T5, T-52, or T6.

B. Aluminum Sheet: ASTM B 209 (ASTM B 209M), Alloy 3003 or 5005 with temper as required for forming, or as otherwise recommended by metal producer for required finish.

C. Fasteners: Use types and sizes to suit unit installation conditions.

1. Use **tamper-resistant** screws for exposed fasteners unless otherwise indicated.
2. For fastening aluminum, use aluminum or 300 series stainless-steel fasteners.
3. For color-finished louvers, use fasteners with heads that match color of louvers.

D. Bituminous Paint: Cold-applied asphalt emulsion complying with ASTM D 1187.

2.5 FABRICATION

A. Fabricate frames, including integral sills, to fit in openings of sizes indicated, with allowances made for fabrication and installation tolerances, adjoining material tolerances, and perimeter sealant joints.

B. Join frame members to each other and to fixed louver blades with fillet welds **concealed from view** unless otherwise indicated or size of louver assembly makes bolted connections between frame members necessary.

2.6 ALUMINUM FINISHES

A. Color: As selected by Architect from full range of industry colors and color densities.

B. High-Performance Organic Finish: Two-coat fluoropolymer finish complying with **AAMA 2604** and containing not less than **70** percent PVDF resin by weight in color coat. Prepare, pretreat, and apply coating to exposed metal surfaces to comply with coating and resin manufacturers' written instructions.

1. Color and Gloss: **As selected by Architect from manufacturer's full range**.

PART 3 - EXECUTION

3.1 INSTALLATION

A. Locate and place louvers level, plumb, and at indicated alignment with adjacent work.

B. Use concealed anchorages where possible. Provide brass or lead washers fitted to screws where required to protect metal surfaces and to make a weathertight connection.

C. Provide perimeter reveals and openings of uniform width for sealants and joint fillers, as indicated.

D. Protect unpainted galvanized and nonferrous-metal surfaces that are in contact with concrete, masonry, or dissimilar metals from corrosion and galvanic action by applying a heavy coating of bituminous paint or by separating surfaces with waterproof gaskets or nonmetallic flashing.

3.2 ADJUSTING

A. Restore louvers damaged during installation and construction so no evidence remains of corrective work. If results of restoration are unsuccessful, as determined by Architect, remove damaged units and replace with new units.

END OF SECTION 089119

This page left intentionally blank.

SECTION 092216 - NON-STRUCTURAL METAL FRAMING

PART 1 - GENERAL

1.1 SUMMARY

A. Section Includes:

1. Non-load-bearing steel framing systems for interior gypsum board assemblies.
2. Suspension systems for interior gypsum ceilings and soffits.

1.2 ACTION SUBMITTALS

A. Product Data: For each type of product.

B. LEED Submittals:

1. Product Data for Credit MR 4: For products having recycled content, documentation indicating percentages by weight of postconsumer and pre-consumer recycled content. Include statement indicating costs for each product having recycled content.

PART 2 - PRODUCTS

2.1 PERFORMANCE REQUIREMENTS

A. Fire-Test-Response Characteristics: Provide materials and construction identical to those tested according to ASTM E 119.

B. STC-Rated Assemblies: Provide materials and construction identical to those tested in assembly indicated according to ASTM E 90 and classified according to ASTM E 413.

2.2 FRAMING SYSTEMS

A. Recycled Content of Steel Products: Postconsumer recycled content plus one-half of prec-onsumer recycled content is not less than 25 percent.

B. Steel Studs and Runners: ASTM C 645. Use either steel studs and runners or dimpled steel studs and runners of equivalent minimum base-metal thickness.

1. Minimum Base-Metal Thickness: 22GA
2. Depth: As indicated on Drawings.

C. Slip-Type Head Joints: Where indicated, provide one of the following in thickness not less than indicated for studs and in width to accommodate depth of studs:

1. Single Long-Leg Runner System: ASTM C 645 top runner with 2-inch- (51-mm-) deep flanges, installed with studs friction fit into top runner and with continuous bridging located within 12 inches (305 mm) of the top of studs to provide lateral bracing.
2. Double-Runner System: ASTM C 645 top runners, inside runner with 2-inch- (51-mm-) deep flanges and fastened to studs, and outer runner sized to friction fit inside runner.
3. Deflection Track: Steel sheet top runner manufactured to prevent cracking of finishes due to deflection of structure above.

    a. Products: Subject to compliance with requirements, provide one of the following:

        1) Dietrich Metal Framing; SLP-TRK Slotted Deflection Track.
        2) MBA Building Supplies;
        3) Steel Network Inc. (The);
        4) Superior Metal Trim; Superior Flex Track System (SFT).
        5) Telling Industries; [

D. Firestop Tracks: Manufactured to allow partition heads to expand and contract with movement of the structure while maintaining continuity of fire-resistance-rated assembly indicated; in thickness not less than indicated for studs and in width to accommodate depth of studs.

1. Products: Subject to compliance with requirements, provide one of the following:

    a. Fire Trak Corp.; Fire Trak System
    b. Grace Construction Products; FlameSafe FlowTrak System.
    c. Metal-Lite, Inc.; The System.

E. Flat Strap and Backing Plate: Steel sheet for blocking and bracing in length and width indicated.

1. Minimum Base-Metal Thickness: 0.018 inch (0.45 mm).

F. Cold-Rolled Channel Bridging: Steel, 0.053-inch (1.34-mm) minimum base-metal thickness, with minimum 1/2-inch- (13-mm-) wide flanges.

1. Depth: 1-1/2 inches (38 mm).
2. Clip Angle: Not less than 1-1/2 by 1-1/2 inches (38 by 38 mm), 0.068-inch- (1.72-mm-) thick, galvanized steel.

G. Hat-Shaped, Rigid Furring Channels: ASTM C 645.

1. Minimum Base-Metal Thickness:0.018 inch (0.45 mm).
2. Depth: 7/8 inch (22.2 mm).

H. Resilient Furring Channels: 1/2-inch- (13-mm-) deep, steel sheet members designed to reduce sound transmission.

1. Configuration: Asymmetrical.

I. Cold-Rolled Furring Channels: 0.053-inch (1.34-mm) uncoated-steel thickness, with minimum 1/2-inch- (13-mm-) wide flanges.

1. Depth: As indicated on Drawings 3/4 inch (19 mm).
2. Furring Brackets: Adjustable, corrugated-edge type of steel sheet with minimum uncoated-steel thickness of 0.033 inch (0.8 mm).

3. Tie Wire: ASTM A 641/A 641M, Class 1 zinc coating, soft temper, 0.062-inch- (1.59-mm-) diameter wire, or double strand of 0.048-inch- (1.21-mm-) diameter wire.

J. Z-Shaped Furring: With slotted or non-slotted web, face flange of 1-1/4 inches (31.8 mm) , wall attachment flange of 7/8 inch (22 mm), minimum uncoated-metal thickness of 0.018 inch (0.45 mm), and depth required to fit insulation thickness indicated.

2.3 SUSPENSION SYSTEMS

A. Tie Wire: ASTM A 641/A 641M, Class 1 zinc coating, soft temper, 0.062-inch- (1.59-mm-) diameter wire, or double strand of 0.048-inch- (1.21-mm-) diameter wire.

B. Wire Hangers: ASTM A 641/A 641M, Class 1 zinc coating, soft temper, 0.16 inch (4.12 mm) in diameter.

C. Flat Hangers: Steel sheet, 1 by 3/16 inch (25 by 5 mm) by length indicated.

D. Carrying Channels: Cold-rolled, commercial-steel sheet with a base-metal thickness of 0.053 inch (1.34 mm) and minimum 1/2-inch- (13-mm-) wide flanges.

1. Depth:1-1/2 inches (38 mm).

E. Furring Channels (Furring Members):

1. Cold-Rolled Channels: 0.053-inch (1.34-mm) uncoated-steel thickness, with minimum 1/2-inch- (13-mm-) wide flanges, 3/4 inch (19 mm) deep.
2. Steel Studs and Runners: ASTM C 645. Use either steel studs and runners or dimpled steel studs and runners of equivalent minimum base-metal thickness.

a. Minimum Base-Metal Thickness: 0.018 inch (0.45 mm).
b. Depth: [As indicated on Drawings] [1-5/8 inches (41 mm)] [2-1/2 inches (64 mm)] [3-5/8 inches (92 mm)].

3. Hat-Shaped, Rigid Furring Channels: ASTM C 645, 7/8 inch (22 mm) deep.

a. Minimum Base-Metal Thickness: 0.018 inch (0.45 mm).

4. Resilient Furring Channels: 1/2-inch- (13-mm-) deep members designed to reduce sound transmission.

a. Configuration: Asymmetrical or hat shaped.

2.4 AUXILIARY MATERIALS

A. Fasteners for Metal Framing: Of type, material, size, corrosion resistance, holding power, and other properties required to fasten steel members to substrates.

B. Isolation Strip at Exterior Walls: Provide[asphalt saturated organic felt] [or] [foam gasket].

PART 3 - EXECUTION

3.1 INSTALLATION, GENERAL

A. Installation Standard: ASTM C 754.

1. Gypsum Plaster Assemblies: Also comply with requirements in ASTM C 841 that apply to framing installation.
2. Portland Cement Plaster Assemblies: Also comply with requirements in ASTM C 1063 that apply to framing installation.
3. Gypsum Veneer Plaster Assemblies: Also comply with requirements in ASTM C 844 that apply to framing installation.
4. Gypsum Board Assemblies: Also comply with requirements in ASTM C 840 that apply to framing installation.

B. Install supplementary framing, and blocking to support fixtures, equipment services, heavy trim, grab bars, toilet accessories, furnishings, or similar construction.

C. Install bracing at terminations in assemblies.

D. Do not bridge building control and expansion joints with non-load-bearing steel framing members. Frame both sides of joints independently.

3.2 INSTALLING FRAMED ASSEMBLIES

A. Install framing system components according to spacings indicated, but not greater than spacings required by referenced installation standards for assembly types.

B. Where studs are installed directly against exterior masonry walls or dissimilar metals at exterior walls, install isolation strip between studs and exterior wall.

C. Install studs so flanges within framing system point in same direction.

D. Install tracks (runners) at floors and overhead supports. Extend framing full height to structural supports or substrates above suspended ceilings, except where partitions are indicated to terminate at suspended ceilings. Continue framing around ducts penetrating partitions above ceiling.

1. Slip-Type Head Joints: Where framing extends to overhead structural supports, install to produce joints at tops of framing systems that prevent axial loading of finished assemblies.
2. Door Openings: Screw vertical studs at jambs to jamb anchor clips on door frames; install runner track section (for cripple studs) at head and secure to jamb studs.

    a. Install two studs at each jamb unless otherwise indicated.
3. Fire-Resistance-Rated Partitions: Install framing to comply with fire-resistance-rated assembly indicated and support closures and to make partitions continuous from floor to underside of solid structure.

    a. Firestop Track: Where indicated, install to maintain continuity of fire-resistance-rated assembly indicated

b. Curved Partitions:
   1) Bend track to uniform curve and locate straight lengths so they are tangent to arcs.
   2) Begin and end each arc with a stud, and space intermediate studs equally along arcs. On straight lengths of no fewer than two studs at ends of arcs, place studs 6 inches (150 mm) o.c.

E. Direct Furring:
   1. Attach to concrete or masonry with stub nails, screws designed for masonry attachment, or powder-driven fasteners spaced 24 inches (610 mm) o.c.

3.3 INSTALLING SUSPENSION SYSTEMS

A. Install suspension system components according to spacings indicated, but not greater than spacings required by referenced installation standards for assembly types.

B. Isolate suspension systems from building structure where they abut or are penetrated by building structure to prevent transfer of loading imposed by structural movement.

C. Suspend hangers from building structure as follows:

   1. Install hangers plumb and free from contact with insulation or other objects within ceiling plenum that are not part of supporting structural or suspension system.

      a. Splay hangers only where required to miss obstructions and offset resulting horizontal forces by bracing, counter-splaying, or other equally effective means.

   2. Where width of ducts and other construction within ceiling plenum produces hanger spacings that interfere with locations of hangers, install supplemental suspension members and hangers in the form of trapezes or equivalent devices.
   3. Do not attach hangers to steel roof deck.
   4. Do not attach hangers to permanent metal forms. Furnish cast-in-place hanger inserts that extend through forms.
   5. Do not attach hangers to rolled-in hanger tabs of composite steel floor deck.
   6. Do not connect or suspend steel framing from ducts, pipes, or conduit.

D. Fire-Resistance-Rated Assemblies: Wire tie furring channels to supports.

E. Installation Tolerances: Install suspension systems that are level to within 1/8 inch in 12 feet (3 mm in 3.6 m) measured lengthwise on each member that will receive finishes and transversely between parallel members that will receive finishes.

END OF SECTION 092216

THIS PAGE LEFT INTENTIONALLY BLANK

09 25 13 FINISH SYSTEM FOR ICF (INSULATING CONCRETE FORMS)

PART 1 GENERAL **(Basis of Design: StoQuik Finish System for ICF)**

1.1 SUMMARY

A. Provide finish system for vertical above grade exterior ICF wall surfaces.

1.2 SUBMITTALS

A. Product Data: Submit manufacturer's product data and installation instructions for each material and product used. Include manufacturer's Material Safety Data Sheets.

1.3 REFERENCES

A. ASTM Standards

1. C578, Standard Specification for Rigid, Cellular Polystyrene Thermal Insulation
2. C920, Standard Specification for Elastomeric Joint Sealants
3. C1382, Standard Method for Determining Tensile Adhesion Properties of Sealants When Use in Exterior Insulation and Finish Systems
4. E84, Standard Test Method for Surface Burning Characteristics of Building Materials

B. South Coast Air Quality Management District (South Coast AQMD)

1. Rule 1113, Architectural Coatings

C. Other Referenced Documents

1. Sto Tech Hotline No. 0900-EC, EIFS Finishes for Insulating Concrete Forms (ICFs)

1.4 QUALITY ASSURANCE

A. Manufacturer's Qualifications: The finish system manufacturer shall be a company with at least thirty five years of experience in manufacturing specialty finishes and regularly engaged in the manufacture and marketing of products specified herein. The manufacturer shall have an ISO 9001:2008 certified quality system and ISO 14001:2004 certified environmental management system.

B. Installer's Qualifications: The contractor shall be qualified to perform the work specified by reason of experience. Contractor shall have at least 5 years of experience in commercial textured or specialty finish application, and shall have completed at least 3 projects of similar size and complexity. Contractor shall provide proof before commencement of work that he/she will maintain and supervise a qualified crew of applicators through the duration of the work. When requested Contractor shall provide a list of the last three comparable jobs including the name, location, and start and finish dates for the work.

C. Mock-ups: The contractor shall install a mock-up of the system for evaluation and approval by the design professional, building owner, or owner’s representative/quality assurance agent.

D. Testing: Testing shall be conducted as directed by the design professional, building owner, or owner's representative/quality assurance agent to verify wall assembly performance and to verify adhesion to prepared substrates before and during construction.

1.5 DELIVERY, STORAGE AND HANDLING

A. Deliver products in original packaging, labeled with product identification, manufacturer, and batch number.

B. Store products in a dry area with temperature maintained between 50 and 85 degrees F (10 and 29 degrees C). Protect from direct sunlight. Protect from freezing. Protect from extreme heat (>90 degrees F [32 degrees C]).

C. Handle products in accordance with manufacturer's printed instructions.

1.6 WARRANTY

A. Provide manufacturer's standard limited warranty.

PART 2 PRODUCTS

2.1 MATERIALS

A. Finishes, primers, adhesives, stains and any other associated materials for the finish system shall be Class A building materials based on testing in accordance with ASTM E84. VOC (Volatile Organic Content) shall be less than 50g/L and shall comply with South Coast AQMD Rule 1113 requirements.

B. Textured Finishes

1. Stolit® – factory blended, decorative and protective acrylic textured wall finish with integral color (Freeform Smooth)

C. Primer

1. StoPrime® Smooth – acrylic-based smooth primer for use with Sto Smooth Finishes (Stolit Milano or Stolit Freeform applied to create a smooth wall finish)

D. Base Coat

1. Sto Primer/Adhesive-B – one component polymer modified portland cement base coat

E. Waterproof Base Coat

1. Sto Flexyl – one component acrylic-based additive combined with portland cement in the field

F. Surface Reinforcement (Standard and High Impact)

1. Sto Mesh – nominal 4.5 oz/sq.yd. (153 g/sq.m.) glass fiber reinforcing mesh treated for compatibility with Sto materials

G. ICF

1. Building code compliant ICF made with EPS (expanded polystyrene) in conformance with ASTM C 578 Type I, II, or IV requirements, with embedded form ties (no plates, discs, or ribs on the surface of the EPS).

H. Accessories

1. StoSeal STPE Sealant - high-movement, medium modulus, non-sag one-component silyl-terminated polyether joint sealant in compliance with ASTM C920 and tested in accordance with ASTM C1382

PART 3 EXECUTION

3.1 INSTALLATION

A. The ICF must be constructed in conformance with the applicable building code, manufacturer's written installation instructions, and installed in courses with a running bond pattern and inside and outside corners interlocked. ICF units shall not exceed 2 x 4 ft. (1.6 x 3.2 m) in dimension with the long dimension oriented horizontally on the wall surface. ICF joints shall be tightly abutted without concrete in the joints or concrete protrusions. ICF wall surface shall be free of blow-outs, or other surface defects and shall not have planar irregularities in excess of 1/16 inch (1.6 mm). ICF must be clean, dry, and free of surface contamination.

B. Mixing

1. Mix Sto products in accordance with published literature. Refer to applicable Product Bulletins for specific information on use, handling, application, precautions, and limitations of specific products.

C. Application

1. Rasp the entire ICF wall surface to remove any UV degradation on the surface, to make abutting joints flush, and to minimize any planar irregularities in the surface. Ensure form ties are not exposed on the ICF surface.

2. Install nominal 1/8 inch (3 mm) base coat by trowel to the wall surface. Work horizontally or vertically in strips of 40 inches (1016 mm), and immediately embed the mesh into the wet base coat by troweling from the center to the edges of the mesh. Overlap mesh not less than 2-½ inches (64 mm) at mesh seams and feather at seams. Double wrap all inside and outside corners with minimum 6-inch (152 mm) overlap in each direction. Avoid wrinkles in the mesh. The mesh must be fully embedded so that no mesh color shows through. Re-skim with additional base coat if mesh color is visible.

3. When the base coat application is dry apply the primer by brush or roller to the entire base coat surface.

4. When the primer application is dry apply the Sto finish

a. Sto Textured Finish Installation: Refer to applicable Product Bulletin

5. Do not insta;ll base coat, reinforcing mesh or finish over joint sealants. Install over continuous EPS insulation board surface (and edges at EPS board returns) only.

D. Protection

1. Provide protection of installed materials from water infiltration into or behind them during and after construction.
2. Provide protection of installed materials from dust, dirt, precipitation, freezing and continuous high humidity until they are fully dry.
3. Provide coping and/or flashing at sills, projecting features, deck attachments, roof/wall intersections, parapets and similar construction details to prevent water entry into wall assembly or into and behind the finish system. Seal penetrations through the finished wall surface with backer rod and sealant or other appropriate means to provide a watertight condition.

END OF SECTION 09 25 13

09 25 13.1 FINISH FOR COLUMN WRAPS AT LOBBY / CURTAINWALL

PART 1 GENERAL **(Basis of Design: StoQuik Silver - DrainScreen)**

A. GENERAL

a. SUMMARY

a. This section includes materials and installation of exterior direct-applied cement board stucco backed with a drainage mat and an air and water-resistive barrier applied to sheathing on wood or steel frame walls.

b. RELATED SECTIONS

a.	Section 04 20 00	Unit Masonry
b.	Section 06 16 00	Sheathing
c.	Section 07 27 00	Air and Water-resistive Barriers
d.	Section 07 50 00	Membrane Roofing
e.	Section 07 62 00	Sheet Metal Flashing and Trim
f.	Section 07 92 00	Joint Sealants
g.	Section 08 40 00	Entrances, Storefronts, and Curtain Walls
h.	Section 08 50 00	Windows

c. REFERENCED DOCUMENTS

a. ASTM International (ASTM)

C150	Specification for Portland Cement
C297	Standard Test Method for Flatwise Tensile Strength of Sandwich Constructions
C578	Specification for Preformed, Cellular Polystyrene Thermal Insulation
C920	Specification for Elastomeric Joint Sealants
C1177	Specification for Glass Mat Gypsum for Use as Sheathing
C1325	Specification for Non-Asbestos Fiber-Mat Reinforced Cement Substrate Sheets
D4541	Test Method for Pull-Off Strength of Coatings Using Portable Adhesion Testers
E84	Test Method for Surface Burning Characteristics of Building Materials
E96	Standard Test Methods for Water Vapor Transmission of Materials

E283	Test Method for Determining Rate of Air Leakage Through Exterior Windows, Curtain Walls, and Doors Under Specified Pressure Differences Across the Specimen
E330	Test Method for Structural Performance of Windows, Curtain Walls, and Doors by Uniform Static Air Pressure Difference
E331	Test Method for Water Penetration of Exterior Windows, Skylights, Doors, and Curtain Walls by Uniform Static Air Pressure Difference
E779	Standard Test Method for Determining Air Leakage Rate by Fan Pressurization
E2178	Standard Test Method for Air Permeance of Building Materials
E2357	Standard Test Method for Determining Air Leakage of Air and Water-Resistive Barrier Assemblies
E2430	Standard Specification for Expanded Polystyrene ("EPS") Thermal Insulation Boards for Use in Exterior Insulation and Finish Systems (EIFS)

b. APA Engineered Wood Association

PS 1	Voluntary Product Standard, Structural Plywood
PS 2	Performance Standard for Wood-Based Structural-Use Panels
E 30	APA Engineered Wood Construction Guide

c. ICC (International Code Council)

2018 and 2021 IBC (International Building Code) and IRC (international Residential Code)

d. ICC ES (International Code Council Evaluation Service)

AC 59	Acceptance Criteria for Direct Applied Exterior Finish Systems (DEFS)
ICC ESR 2536	StoQuik Silver Cement Board Stucco Systems

e. National Fire Protection Association (NFPA) Standards

NFPA 285	Standard Method of Test for the Evaluation of Flammability Characteristics of Exterior Non-Load-Bearing Wall Assemblies Containing Combustible Components Using the Intermediate-Scale, Multistory Test Apparatus (Limitation of 40 ft with DrainScreen)
NFPA 268	Standard Test Method for Determining Ignitability of Exterior Wall Assemblies Using a Radiant Heat Energy Source

f. South Coast Air Quality Management District (SCAQMD)

Rule 1113 (2019)	Building Envelope Coatings

g. Sto Technical Publications

Detail Series 11.xx, StoQuik Silver DrainScreen Detail Booklet

Sto RapidGuard Installation Guide

StoGuard Conformable Membrane Installation Guide

Detail Series 24.xx, StoShield SA Self-Adhered Membrane Air & Water-Resistive Barriers Installation Guide
Sto Tech Hotline 0307-S, Accessories for StoQuik Silver Cement Board Stucco Systems
Sto Tech Hotline 0407-S, Keys to Success: StoQuik Silver Cement Board Stucco Systems

h. Underwriters Laboratories
UL ER22158-01 PermaBase Cementitious Backer Units

i. USEPA (United States Environmental Protection Agency)
40 CFR Part 59 Code of Federal Regulations Title 40 Part 59 – National Volatile Organic Compound Emission Standards for Consumer and Commercial Products

d. DESIGN REQUIREMENTS

a. Structural (wind and axial loads)

i. Design for maximum allowable deflection, normal to the plane of the wall of L/360

ii. Design for wind load in conformance with code requirements using framing members designed to comply with the standards, strength, and stiffness requirements of the applicable code.

iii. Minimum Stud Size / Gauge: wood studs, minimum 2x4; metal studs, minimum 18 gauge, 3-5/8 inch deep

iv. Maximum stud spacing: 16 inches (406mm) on center

v. Sheathing: minimum ½ inch inch (13mm) glass mat faced gypsum sheathing in compliance with ASTM C 1177 or minimum $^{7}/_{16}$ inch (11 mm) Exterior or Exposure I plywood or OSB wood-based sheathing in compliance with US DOC PS-2

vi. Drainage mat: maximum ¼ or $^{3}/_{8}$ inch (6 or 10mm) thick tangled filament core with fabric facing.

vii. Screw fasteners for cement board:

1. Wood framing – minimum #9 Type S corrosion resistant screws with minimum 0.395 inch (10mm) wafer head diameter, and minimum 1 inch (25mm) penetration into framing

2. Steel framing – minimum #8 Type S-12 corrosion resistant screws with minimum 0.395 inch (10mm) wafer head diameter and minimum $^{3}/_{8}$ inch (9.5mm) and three thread penetration into framing

viii. Cement board fastener spacing: maximum 8 inches (203mm) vertically along studs

ix. Ultimate wind load resistance capabilities:

1. Wood framing capable of achieving ultimate wind load resistance of +99 psf, -111 psf (+4.7 kPA, -5.31kPa): minimum 2x4 kiln dried wood studs with minimum specific gravity of 0.50 spaced 16 inches (406mm) on center maximum.

2. Metal framing capable of achieving +159 psf, -81 psf (+7.61kPa, -3.88kPa): minimum 18 gage (0.045 mil) or heavier, minimum 3-$^{5}/_{8}$ inch (92mm) depth and 1-$^{5}/_{8}$ inch

(41.3mm) flange width, cold formed C-shaped steel stud framing spaced 16 inches (406mm) on center maximum.

3. Metal framing capable of achieving+166 psf, -94 psf (+7.94kPa, -4.50kPa): minimum 16 gage or heavier, minimum 6 inch (152mm) depth and 2 inch (50.8mm) flange width, cold formed C-shaped steel stud framing spaced 16 inches (406mm) on center maximum.

b. Moisture Control

i. Prevent the accumulation of water into or behind the cement board stucco, either by condensation or leakage into the wall construction, in the design and detailing of the wall assembly:

1. Provide corrosion resistant flashing to protect exposed elements and to direct water to the exterior, including, above window and door heads, beneath window and door sills, at floor lines, at roof/wall intersections, decks, abutments of lower walls with higher walls, above projecting features, and at the base of the wall.

2. Air Leakage Prevention – prevent excess air leakage in the design and detailing of the wall assembly. Provide continuity between air and water-resistive barrier components in the wall assembly.

3. Vapor Diffusion and Condensation – perform a dew point analysis of the wall assembly to determine the potential for accumulation of moisture in the wall assembly as a result of water vapor diffusion and condensation. Adjust wall assembly components accordingly to minimize the risk of condensation. Avoid the use of vapor retarders on the interior side of the wall in warm, humid climates.

4. Provide StoGuard Air and Water-Resistive Barrier and Sto DrainScreen over sheathing.

5. At through wall expansion joints and at joints formed with back-to-back casing beads, back joints with StoGuard Conformable Membrane. Refer to Sto Guide Details at www.stocorp.com.

6. Seal cement board stucco accessory butt joints with appropriate sealant. Seal all cement board stucco terminations and penetrations through the cement board stucco wall assembly with appropriate sealant, or backer rod and sealant, as dictated by joint type.

c. Grade Condition

i. Do not specify cement board stucco for use below grade or on surfaces subject to continuous or intermittent water immersion or hydrostatic pressure. Provide minimum 6 inch (150mm) clearance above grade. Provide increased clearance in freeze/thaw climate zones.

d. Sloped surfaces, Including Foam Trim and Projecting Architectural Features Attached to Cement Board.

i. Avoid the use of cement board stucco on build-outs or weather exposed sloped and horizontal surfaces (refer to 2 and 3 below).

ii. Build out trim and projecting architectural features from the cement board wall surface with code compliant EPS foam. All foam trim and projecting architectural features must have a minimum 1:2 [27°] slope along their top surface. All foam horizontal reveals must have a minimum 1:2 [27°] slope along their bottom surface. Increase slope for northern climates to prevent accumulation of ice/snow and water on surface. Where trim/feature or bottom surface of reveal projects more than 2 inches (51mm) from the face of the wall plane, protect the top surface with waterproof base coat. Limit foam thickness to a maximum of 4 inches (102mm). Periodic inspections and increased maintenance may be required to maintain surface integrity of finishes on weather exposed sloped surfaces. Limit projecting features to easily accessible areas and limit total area to facilitate maintenance and minimize maintenance burden. Refer to Sto Guide Details at www.stocorp.com

iii. Do not use foam on weather exposed projecting ledges, sills, or other projecting features unless supported by framing or other structural support and protected with metal coping or flashing. Refer to Sto Guide Details at www.stocorp.com

e. Joints and Accessories

i. Provide back-to-back casing beads in the cement board stucco assembly where building movement is anticipated: at joints in the substrate or supporting construction, where the system is to be installed over dissimilar construction or substrates, at changes in building height, at floor lines, at columns and cantilevered areas. Back the joint with StoGuard Conformable Membrane.

ii. Provide one piece control joints at no greater than 25 ft (7.6m) intervals and 625 ft^2 (58m^2) for light colors (LRV $\geq$ 70), and at no greater than 16 ft (4.68m) and every 256 ft^2 (23.5m^2) for dark colors (LRV < 70 and $\geq$ 30). Do not exceed length to width ratio of 2-$^1/_2$:1 in expansion joint layout.

iii. Provide one piece control joints at through wall penetrations, for example, at corners above and below windows, above doors, and similar penetrations through the wall. Alternatively use minimum 9 inch (229 mm) wide diagonal mesh reinforcement at corners over cement board sheathing that is cut in an “L” shape around the corner of the opening.

iv. Provide minimum $^3/_8$ inch (9 mm) wide joints where the system abuts windows, doors and other through wall penetrations.

v. Provide appropriate accessories at cement board stucco terminations and joints.

vi. Avoid the use of channel reveal accessories which can interfere with proper drainage and proper stress relief.

vii. Provide appropriate sealant at cement board stucco terminations and at stucco accessory butt joints.

viii. Indicate location of joints, accessories and accessory type on architectural drawings.

f. Fire Protection

i. Noncombustible Construction: limited to use on building less than or equal to 40-ft (12.2m) in height. Provide full width firestops at floor lines, typically 4 pcf (64kg/m^3) semi-rigid mineral wool, where metal framing runs continuously past floor line. Refer to Sto Details.

ii. Combustible Construction: height limit as permitted by the applicable building code.

iii. Provide 15-minute thermal barrier, typically minimum ½ inch thick interior gypsum wall board or exterior gypsum sheathing, to separate combustible components on the exterior from interior space.

iv. Fire-Resistance Rated Construction: where an hourly fire-resistance rating is required consult ICC ESR 2536 and UL ER22158-01 and provide analysis where needed of the final proposed wall assembly to verify rating is met.

g. Color Limitations

i. Select colors with a lightness reflectance value (LRV) of $\geq$ 30 and as dictated by allowable joint spacing (1.04 E2). Refer to Sto Color Chart for LRVs.

e. PERFORMANCE REQUIREMENTS

a. Air and Water-Resistive Barrier

i. Compliant with ICC-ES Acceptance Criteria AC212

ii. Material Air Leakage Resistance, ASTM E2178: less than 0.02 L/s·m^2 (0.004 cfm/ft^2 at 1.57 psf)

iii. Assembly Air Leakage Resistance, ASTM E2357: less than 0.2 L/s·m^2 (0.04 cfm/ft^2 at 1.57 psf)

iv. Water Vapor Permeance, Vapor Permeable, ASTM E96, Method B: greater than 10 perms [573 ng/(Pa·s·m^2)]. Vapor Impermeable, ASTM E96, Method A less than 0.1 perms [5.73 ng/(Pa·s·m^2)].

v. Surface Burning, ASTM E84: Flame Spread less than 25, Smoke Developed less than 75, Class A Building Material

vi. Tensile Adhesion, ASTM C297: > 15 psi (103 kPa)

vii. VOC, calculation:

1. Less than 50 g/L

2. Compliant with US EPA 40 CFR 59 for Architectural Coating, Waterproofing/Sealer

3. Compliant with South Coast AQMD Rule 1113 for Building Envelope Coating

b. Drainage Mat

i. Surface Burning, ASTM E 84: Flame Spread less than 25, Smoke Developed less than 450, Class A Building Material

c. Direct-Applied Cement Board Stucco Finish System and Components

i. Compliant with ICC-ES AC59.

ii. Surface Burning, ASTM E84: Flame Spread less than 25, Smoke Developed less than 450, Class A building material

iii. VOC: less than 50 g/L, compliant with South Coast AQMD Rule 1113 for Architectural Coatings

f. SUBMITTALS

a. Manufacturer's specifications, details, installation instructions and product data

b. Manufacturer’s code compliance report for air and water-resistive barrier

c. Manufacturer’s code compliance report for cement board stucco

d. Manufacturer's standard warranty

e. Samples for approval as directed by architect or owner

f. Fastener manufacturer’s pull-out or withdrawal capacity testing for frame construction

g. Prepare and submit project-specific details (when required by contract documents)

g. QUALITY ASSURANCE

a. Manufacturer Requirements

i. Cement board stucco and air and water-resistive barrier products manufacturer for a minimum of twenty-five (25) years.

ii. Cement board stucco finish products and air and water-resistive barrier products manufactured under ISO 9001 Quality System and 14001 Environmental Management System.

b. Contractor Requirements

i. Licensed, insured and engaged in application of stucco for a minimum of three (3) years.

ii. Knowledgeable in the proper use and handling of Sto materials.

iii. Employ skilled mechanics who are experienced and knowledgeable in stucco application, and familiar with the requirements of the specified work.

iv. Successful completion of minimum of three (3) projects of similar size and complexity to the specified project.

v. Provide the proper equipment, manpower and supervision on the job site to install the system in compliance with Sto's published specifications and details and the project plans and specifications.

c. Foam Trim Insulation Board Manufacturer Requirements

i. Manufacturer of ASTM C578 compliant insulation board, listed by an approved agency. Label insulation board with information required by Sto, the approved listing agency, and the applicable building code

ii. Insulation board listed in a current ICC-ES evaluation report

d. Cement Board Manufacturer Requirements

i. Manufacturer of ASTM C1325 compliant cement board

ii. Cement board listed in a current UL evaluation report

e. Testing

i. Construct full-scale mock-up of typical cement board stucco/window wall assembly with specified tools and materials and test air and water infiltration and structural performance in accordance with ASTM E283, E331 and E330, respectively, through independent laboratory. Mock-up shall comply with requirements of project specifications. Where mock-up is tested at job site maintain approved mock-up at site as reference standard. If tested off-site accurately record construction detailing and sequencing of approved mock-up for replication during construction.

ii. Conduct air and water-resistive barrier adhesion testing in accordance with ASTM D4541.

iii. Conduct air and water-resistive barrier assembly testing in accordance with ASTM E779.

iv. Verify adequacy of pull-out or withdrawal capacity of fasteners used for frame construction with manufacturer in relation to negative design wind pressures.

v. Conduct wet sealant adhesion testing in accordance with sealant manufacturer's field quality control test procedure.

vi. Notify design professional minimum 7 days prior to testing.

f. Inspections

i. Provide independent third party inspection where required by code or contract documents.

ii. Conduct inspections in accordance with code requirements and contract documents.

h. DELIVERY, STORAGE AND HANDLING

a. Deliver all materials in their original sealed containers bearing manufacturer's name and identification of product.

b. Protect foam plastic insulation materials from prolonged UV exposure, keep away from sources of heat, sparks, flame, flammable or volatile materials. Store on a clean, flat surface, off the ground in a dry area.

c. Store cement board materials inside and protect from damage by the elements. Protect ends, edges, and faces of cement boards from damage.

d. Protect coatings (pail products) from freezing and temperatures in excess of 90°F (32° C). Store away from direct sunlight.

e. Protect portland cement-based materials (bag products) from moisture and humidity. Store under cover off the ground in a cool, dry location.

f. Protect STPE gun grade air barrier detailing products and sealant products from freezing and temperatures in excess of 90°F (32°C). Store in a cool, dry location away from direct sunlight and from sources of ignition.

g. Handle and store all products as directed on labeling.

i. PROJECT/SITE CONDITIONS

a. Maintain ambient and surface temperatures above 40°F (4°C) during application and for 24 hours after application of air and water-resistive barrier and cement board stucco finish materials.

b. Provide supplementary heat for installation in temperatures less than 40°F (4°C) such that material temperatures are maintained as in 1.9A. Prevent concentration of heat on wet cement board stucco finish materials and vent fumes and other products of combustion to the outside to prevent contact with materials.

c. Prevent uneven or excessive evaporation of moisture from base coat during hot, dry or windy weather. Do not install base coat or finish coat if ambient temperatures are expected to rise above 100ºF (38ºC) within a 24-hour period.

d. Provide protection of surrounding areas and adjacent surfaces from application of materials.

j. COORDINATION/SCHEDULING

a. Protect sheathing from climatic conditions to prevent weather damage.

b. Coordinate installation of foundation waterproofing, roofing membrane, windows, doors and other wall penetrations to provide a continuous air and water-resistive barrier and continuous moisture protection. Provide protection of rough openings before installing windows, doors, and other penetrations through the wall and provide sill flashing. Coordinate installation of air and water-resistive barrier components with window and door installation to provide weather proofing of the structure and to prevent moisture infiltration and excess air infiltration.

c. Install diverter flashings wherever water can enter the wall assembly to direct water to the exterior.

d. Install window and door head flashing immediately after windows and doors are installed.

e. Splice-in head flashing, floor line flashing, diverter flashing, and similar flashing with air and water-resistive barrier detail component to provide a shingle lap that directs water to the exterior.

f. Protect the air and water-resistive barrier within the period allowed by the manufacturer. Refer to manufacturer's published information.

g. Protect drainage mat with cement board or other protection within 30 days of installation.

h. Commence the cement board stucco installation after completion of all floor, roof construction and other construction that imposes dead loads on the walls to prevent excessive deflection (and potential cracking) of the cement board stucco.

i. Sequence interior work such as drywall installation prior to cement board stucco installation to prevent stud distortion (and potential cracking) of the cement board stucco.

j. Provide site grading such that the stucco terminates above earth grade minimum 6 inches (152 mm). Provide increased clearance in freeze/thaw climate zones.

k. Install copings and sealant immediately after installation of the cement board stucco finishes and when finish coatings are dry.

l. Attach penetrations through cement board stucco to structural support and provide air tight and water tight seals at penetrations.

k. WARRANTY

a. Provide manufacturer's standard warranty.

B. PRODUCTS

a. MANUFACTURERS

a. Air and Water-Resistive Barrier, Drainage Mat, Cement Board Stucco Base Coat, Primers, Finishes, Joint Sealant Accessory, Outside Corner Bead and Drip Edge Accessories

i. Sto Corp., 3800 Camp Creek Parkway, Building 1400, Suite 120. Atlanta, GA 30331

b. Cement Board

i. National Gypsum Company, Inc., 2001 Rexford Road, Charlotte, NC 28211

c. Cement Board Stucco Accessories

i. Plastic Components, Inc., 9051 NW 97th Terrace, Miami, Florida 33178

b. AIR AND WATER-RESISTIVE BARRIER

A. StoGuard Detail Components for prepared vertical above grade glass mat gypsum sheathing, wood-based sheathing – plywood and OSB – cement board, concrete, and concrete masonry (CMU) substrates

1. Sheathing Joint Treatment, Rough Opening (RO) Protection, Counterflashing, Penetrations, Static Joints and Seams:

a. Sto Gold Coat: brush, spray or roller applied air and water-resistive barrier coating used with StoGuard Fabric reinforcement and Sto RediCorners

b. Sto RapidGuard: single component rapid drying gun-applied STPE liquid-applied flashing and detail component

c. Sto Gold Fill: trowel applied detail component used with StoGuard Mesh, glass fiber self-stick reinforcing mesh

d. StoGuard Conformable Membrane: self-adhered membrane flashing for static and dynamic joints and seams

B. Air and Water-resistive Barrier Coating

1. Sto Gold Coat: ready mixed vapor permeable air and water-resistive barrier coating applied

a. By substrate as follows:

- Glass Mat Gypsum: apply one coat at minimum 10 mils WFT
- Plywood: apply one coat at minimum 10 mils WFT
- Cement Board: apply one coat at minimum 10 mils WFT
- OSB: apply one or two coats at minimum 20 mils WFT. If applied by roller, apply two coats. Touch up any bare spots and raised OSB strands.
- CMU: apply two or three coats at minimum 20-60 mils WFT.
- Concrete: apply one coat at minimum 10 mils WFT

C. ACCESSORIES FOR CEMENT BOARD STUCCO

a. Starter Track – Starter Track Drip Edge (Product No. STDE-xx) or i Drip Track (Product No. iDT-xx), rigid PVC (polyvinyl chloride) plastic tracks with weepholes as furnished by Plastic Components, Inc., for use at terminations such as base of wall, floor lines, roof lines, and similar weep termination lines.

b. Casing Bead – Starter Trac (Product No. ST-xx), a rigid PVC (polyvinyl chloride) plastic accessory as furnished by Plastic Components, Inc., for use at terminations such as windows, doors, and similar through wall penetrations, and used back-to-back at movement joints such as dissimilar materials, through wall expansion joints, and floor line deflection joints. May also be used back-to-back in lieu of a single piece control joint.

c. Outside Corners – Sto-Mesh Corner Bead Standard, one component PVC (polyvinyl chloride) accessory with integral reinforcing mesh for outside corner reinforcement.

d. Drip Edge - Sto Drip Edge Profile, one component PVC (polyvinyl chloride) accessory with integral reinforcing mesh that creates a drip edge and plaster return.

e. Control Joint – “V” Control Joint (Product No. PL 093), rigid PVC (polyvinyl chloride) plastic single piece control joint as furnished by Plastic Components, Inc., for use at intervals in the field of the wall, and at corners of penetrations such as windows, doors, and similar through wall penetrations.

f. Joint Sealant - StoSeal® STPE low modulus joint sealant in conformance with ASTM D920: Type S, Grade NS, Use NT, A, M, Class 100/50

c. DRAINAGE MAT

a. Sto DrainScreen 6mm – nominal ¼ inch (6mm) tangled filament core drainage mat with fabric facing.

d. CEMENT BOARD

a. PermaBase® Brand Cement Board – minimum ½ inch (13mm) thick cement board in Compliance with ASTM C1325

e. MECHANICAL FASTENERS FOR CEMENT BOARD

a. Corrosion resistant screw fasteners:

i. Wood Framing – minimum #9 Type S wafer head fully threaded corrosion resistant screws with minimum 1 inch (25 mm) penetration into framing and minimum 0.395 inch (10mm) head diameter.

ii. Steel Framing – minimum #8 Type S-12 corrosion resistant wafer head fasteners with minimum $^{3}/_{8}$ inch (9.5 mm) and three thread penetration into framing and minimum 0.395 inch (10 mm) head diameter

f. FOAM INSULATION BOARD FOR TRIM

a. Sto EPS Insulation Board--nominal 1.0 lb/ft^3 (16 kg/m^3) Expanded Polystyrene (EPS) Insulation Board in compliance with ASTM C578 Type I requirements, and ASTM E2430

g. JOB MIXED INGREDIENTS

a. Water: clean and potable.

b. Portland cement: Type 1 in compliance with ASTM C150

h. CEMENT BOARD STUCCO JOINT REINFORCEMENT

a. StoGuard Mesh with Sto base coat

i. CEMENT BOARD STUCCO AND FOAM TRIM BASE COAT

a. Base Coat

i. Sto Flexyl – two component fiber reinforced acrylic based waterproof base coat material field mixed with portland cement (for use as a waterproof base coat to waterproof foundations, parapets, splash areas, trim and other projecting architectural features).

j. CEMENT BOARD STUCCO AND FOAM TRIM REINFORCING MESH

a. Sto Mesh--nominal 4.5 oz./yd^2 (153g/m^2), symmetrical, interlaced open-weave glass fiber mesh treated with alkaline resistant coating for compatibility with Sto materials (*achieves Standard Impact Classification over foam insulation board*).

b. Sto Detail Mesh--nominal 4.2 oz/yd^2 (143g/m^2), flexible, symmetrical, interlaced open-weave glass fiber fabric treated with alkaline resistant coating for compatibility with Sto materials (used for standard foam backwrapping and aesthetic detailing).

k. PRIMER

a. StoPrime Sand—acrylic based tinted, sanded primer for base coat surfaces.

l. FINISH

a. Stolit Lotusan Finish – integrally colored, factory blended textured wall finish with Lotus-Effect Technology and graded marble aggregate

b. Stolit HDP Finish – integrally colored, factory blended textured hydrophobic wall finish with graded marble aggregate

~~c. Sto Powerflex Silco Finish – integrally colored, factory blended, silicone enhanced elastomeric textured wall finish with graded marble aggregate~~

~~d. Sto Powerflex Finish – integrally colored, factory blended, elastomeric textured wall finish with graded marble aggregate~~

~~e. StoPowerwall Finish – integrally colored, factory blended, flexible acrylic textured wall finish with graded marble aggregate.~~

~~f.~~c. Stolit Finish – integrally colored, factory blended, acrylic textured wall finish with graded marble aggregate

~~g.~~d. Sto Essence DPR Finish – integrally colored, factory blended, acrylic textured wall finish with graded marble aggregate

~~h.~~e. StoSignature Finishes – Stolit acrylic based textured wall finish applied with specialized techniques to achieve unique textures, impressions or effects. Refer to www.stocorp.com for StoSignature Finishes Brochure and Installation Guides.

~~i.~~f. Sto Specialty Finishes – acrylic based textured wall finishes with colored aggregates that create unique aesthetic effects.

~~j.~~g. StoCast Finishes – Sto pre-formed decorative and protective finish and adhesive

i. StoCast Wood

ii. StoCast Brick

m. MIXING

a. Mix all materials as directed by manufacturer in written instructions on product literature or packaging

b. Do not add anti-freeze or other foreign ingredients unless instructed to do so in writing by the manufacturer

c. When mixing stucco batches, only mix as much material as can readily be used

C. EXECUTION

3.01 INSTALLATION

A. Refer to manufacturers written instructions for installation of StoQuik Silver DrainScreen

3.02 PROTECTION

a. Provide protection of installed materials from water infiltration into or behind them.

b. Provide protection of installed materials from dust, dirt, precipitation, and freezing.

c. Provide protection of installed primer and finish from dust, dirt, precipitation, freezing and continuous high humidity until fully dry.

d. Provide sealant and backer material at cement board stucco terminations and at fixture penetrations through the cement board stucco to protect against air, water and insect infiltration. Provide weeps at floor lines, window and door heads, and other areas to conduct incidental water to the exterior.

3.03 CLEANING, REPAIR AND MAINTENANCE

A, Clean and maintain the cement board stucco finish for a fresh appearance and to prevent water entry into and behind the assembly. Repair cracks, impact damage, spalls or delamination promptly.

B. Maintain adjacent components of construction such as sealants, windows, doors, and flashing, to prevent water entry into the wall assembly.

C. Refer to Sto reStore Repair and Maintenance Guide (reStore Program) for detailed information on restoration – cleaning, repairs, recoating, resurfacing and refinishing, or re-cladding.

APPENDIX

STOQUIK SILVER DRAINSCREEN INSTALLATION

INSTALLER QUALIFICATIONS

1. Applicators pre-qualify under Quality Assurance requirements of the specification (see section 1.7B of specification).

SUBSTRATES

1. Inspect sheathing surfaces for damage and deterioration. Record any areas of moisture damage. Inspect sheathing application for compliance with applicable requirement:

- Glass Mat Faced Gypsum Sheathing in compliance with ASTM C1177—refer to manufacturer's instructions and/or ICC evaluation report
- Exterior Grade and Exposure 1 wood-based sheathing—refer to APA Engineered Wood Association E 30.

2. Report deviations from the requirements of project specifications or other conditions that might adversely affect the air and water-resistive barrier or cement board stucco installation to the General Contractor. Do not proceed with air and water-resistive barrier or cement board stucco installation until deviations are corrected.

SURFACE PREPARATION

1. Sheathing

- Remove surface contaminants and replace damaged sheathing.
- All sheathing must be handled and installed in compliance with applicable building code and manufacturer requirements. Installed sheathing must be clean, dry and free from damage, frost, and all bond-inhibiting materials. Abut gypsum sheathing joints. Gap wood sheathing $^1/_8$-inch (3mm) at joints. Should gaps exceed $^1/_8$-inch (3mm) up to $^1/_2$-inch (13mm) wide, use Sto RapidGuard to fill joints, or apply low expanding urethane foam into joints and rasp or shave flush with sheathing surface in preparation for installation of StoGuard joint treatment.
- Space fasteners no greater than 8-inches (203mm) on center along framing members for gypsum sheathing and in accordance with code requirements for wood-based sheathing. Ensure fasteners are of sufficient length as identified in the specification for proper attachment to framing members.
- Spot surface defects in sheathing with joint treatment (Sto Gold Fill or Sto RapidGuard).
- Verify attachment and installation conforms with requirements for design wind pressures.
- Report deviations from the requirements of project specifications or other conditions that might adversely affect the air and water-resistive barrier, or cement board stucco installation to the General Contractor. Do not proceed with air and water-resistive barrier, or cement board stucco installation until deviations are corrected.

AIR AND WATER-RESISTIVE BARRIER INSTALLATION

1. The following instructions are applicable to:

- Exterior or Exposure I Plywood in compliance with PS-2
- OSB (Oriented Strand Board) in compliance with PS-2
- Glass Mat Faced Gypsum Sheathing in compliance with ASTM C1177

2. Transition Detailing: Detail transition areas with Sto RapidGuard (static joints and seams) or StoGuard Conformable Membrane (static and dynamic joints and seams) to achieve air barrier continuity. For illustrations of installation, refer to *StoQuik Silver Detail Booklet*, *Sto RapidGuard Installation Guide*, *StoGuard Conformable Membrane Installation Guide, and StoShield SA Self-Adhered Membrane Air & Water-Resistive Barrier Installation Guide* (www.stocorp.com)

3. Rough Opening Protection

- Sto RapidGuard: apply a fillet bead of material with a caulking gun at interior corners inside the opening to seal jamb/sill and jamb/head seams. Then apply material in a zig-zag pattern along sill, jambs, and head to form a generous bead of material along the surface to be covered. Use a 6-inch (152mm) wide plastic drywall knife or handheld spreader to spread the material to a uniform thickness of 12-20 mils (0.3-0.5mm) before the

4. Sheathing Joint Treatment

- Sto RapidGuard: apply to properly installed sheathing – joints butted for gypsum sheathing, and joints gapped for plywood and OSB sheathings (wood-based sheathing typically requires $^1/_8$-inch [3mm] spacing at edge and

end joints). Apply a thick bead of Sto RapidGuard with a caulking gun along sheathing joints, or apply in a zig-zag pattern across and down the joints. Spread to a uniform thickness of 20-30mils (0.5-0.6mm) before the material skins. Spread 1-inch (25mm) beyond the sheathing joint on each side. Follow the same procedure for inside and outside corners (refer to Sto *RapidGuard Installation Guide*).

5. Primary Air and Water-Resistive Barrier Installation

- Coating: install the specified AWRB coating uniformly by spray or roller to the required wet film thickness. Refer to individual Product Bulletins for more detailed installation instructions.
- Self-Adhered Membrane: install the self-adhered membrane in shingle lap fashion following the manufacturer's written instructions. Refer to *StoShield SA Self-Adhered Membrane Air & Water-Resistive Barrier Installation Guide* for detailed installation instructions.

6. Air and Water-Resistive Barrier Connections and Shingle Laps

- Coordinate installation of connecting air barrier components with other trades to provide a continuous airtight membrane.
- Coordinate installation of flashing and other moisture protection components with other trades to achieve complete moisture protection such that water is directed to the exterior, not into the wall assembly, and drained to the exterior at sources of leaks (windows, doors and similar penetrations through the wall assembly).
- Splice-in head flashings above windows, doors, floor lines, roof/sidewall step flashing, and similar locations with StoGuard detail component to achieve shingle lap of the air and water-resistive barrier such that water is directed to the exterior.

CEMENT BOARD STUCCO INSTALLATION

After satisfactory inspection of surfaces and correction of any deviations from specification requirements commence the cement board stucco installation as described below. Ensure the installed cement board surface is straight and true within ¼ inch in 10 feet (2mm/m), and is clean, dry and free from damage, frost, and all bond-inhibiting materials before application of coatings or accessories to cement board surface. Ensure the installed base coat or primed base coat surface is clean, dry, free from damage, frost, and all bond inhibiting materials, including dust, dirt, salts, oil, grease, or laitance, before application of primer or finish.

1. Starter track and back mount casing bead accessory installation

- Strike a level line at the base of the wall to mark where the top of the starter track terminates.

- Attach the starter track even with the line onto the structure a maximum of 16 inches (406 mm) on center with the proper fastener: Type S-12 corrosion resistant screws for steel framing with minimum $^{3}/_{8}$ inch (9mm) and three thread penetration, and galvanized or zinc coated nails for wood framing with minimum 1 inch (25 mm) penetration. Blocking installed between the studs may be necessary to secure the track flat against the wall surface. For solid sheathing attach directly into sheathing at 12 inches (305mm) on center maximum.

- Butt sections of starter track together. Miter cut outside corners and abut. Snip front flange of one inside corner piece (to allow the cement board to be seated inside of track) and abut.

- Install Starter Track at other cement board system terminations as designated on detail drawings: above windows and doors, at floor lines, above roof along dormers or gable end walls, and beneath window sills with concealed flashing.

- Install casing beads similarly at cement board stucco termination points—window and door jambs and other through wall penetrations. Install back-to-back casing beads at building expansion joints, thru-wall joints, where the cement board stucco abuts dissimilar construction or substrates, at changes in building height, at floor lines, columns, and cantilevered areas. Install full accessory pieces where possible and avoid small pieces. Where casing bead is used back-to-back as an expansion joint back the membrane with StoGuard Conformable Membrane.

- Splice-in starter track at base of wall, above windows, doors, floor lines, roof/sidewall step flashing, and similar locations with StoGuard detail component to achieve shingle lap of the air and water-resistive barrier such that water is directed to the exterior.

2. Drainage mat installation

- Place drainage mat against the wall surface and unroll horizontally with the fabric facing out. Hammer-tack or staple into place with corrosion-resistant fasteners.

- Use as few fasteners as needed to hold the mat in place, starting from the bottom of the wall at base flashing or weep screed and working up. Do not fasten through flashing.

- Shingle lap fabric at horizontal courses. Shingle lap drainage mat over weep screeds, flashing at floor lines, decks, roof lines, window heads, and other areas where flashing is required, to direct water to the exterior.

- Butt ends of rolls and vertical seams.

- Trim around windows, doors, vents, or other penetrations through the wall. Do not install behind window nail flanges.

- Lap over back leg of installed accessories.

Immediately follow installation of drainage mat with cement board stucco installation. Where cement board stucco installation will not immediately follow installation of drainage mat, use corrosion-resistant cap nails, cap staples, or cap screws every 16 inches (406mm) on center along framing for more secure attachment. Cover drainage mat with cement board within 30 days of installation..

3. Cement Board Installation:

- Install cement board horizontally or vertically. Offset joints from sheathing joints by minimum six inches (152mm). Insert bottom edge of board into the starter track, and then attach the board through the sheathing to studs/framing members with fasteners spaced 8 inches (203mm) on center maximum at the perimeter and in the field of the board, making sure that the fasteners sit flush with the surface of the cement board and do not penetrate the surface of the cement board.

- Install cement boards with vertical joints staggered and with ends and edges closely butted but not forced together and flush at the surface. Cut boards in an “L” shape around openings such as windows, doors, and similar penetrations.

- Provide for expansion joints and control joints in cement board layout (see Design Requirements, Section 1.4).

4. Face Mount Accessory Installation

- Install one piece control joints at wall penetrations, for example, above and below windows and doors. Refer to Sto Tech Hotline No. 0307-S. Install control joints in accordance with the following guidelines:
- Light colors (LRV $\geq$ 70) – at no greater than 25 ft (7.6m) intervals and 625 ft2 (58m^2)
- Dark colors (LRV < 70 and $\geq$ 30) – at no greater than 16 ft (4.68 m) intervals and every 256 ft^2 (23.5m^2)
- Do not exceed length to width ratio of 2-$^1/_2$:1 in expansion joint layout.
- Inside Corners: install corner bead accessory at inside corners adhesively or mechanically. Refer to Sto Tech Hotline No. 0307-S.
- Outside Corners: install corner bead accessory adhesively by completely embedding the accessory in the base coat material. Refer to Sto Tech Hotline No. 0307-S
- Drip Edge: install drip edge accessory by completely embedding the accessory in the base coat material. Refer to Sto Tech Hotline No. 0307-S, *Accessories for StoQuik Silver Cement Board Stucco Systems*.

5. Cement Board Joint Reinforcement, Accessory Overlaps, and Corners of Wall Penetrations

- Install StoGuard Mesh centered over cement board joints. After placing mesh over joints skim coat the surface with base coat to completely cover the mesh.
- Install StoGuard Mesh over perforated accessory flanges up to the “stop bead” on the accessory – starter tracks, casing beads, corner beads, and control joints. After placing mesh over flanges skim coat the surface up to the “stop bead” on the accessory with base coat to completely cover the mesh.
- At corners of wall penetrations where no control joint is used embed 9 x 12 inch (230 x 305mm) StoGuard mesh diagonally in base coat.

6. Foam Trim and Build-Outs

- Where foam build-outs terminate at a dissimilar material such as a window, door or other non-cement board stucco surfaces, backwrap the foam build-out by installing detail mesh onto the terminating edge of the cement board. Embed the mesh in the base coat. Allow the mesh to dangle until the backwrapping procedure is completed.
- Install foam build-outs directly over cement board with foam trim adhesive. Apply adhesive with the appropriate size notched trowel to the back of the insulation board and immediately place build-out in the proper location on the wall. Press firmly into place and trim or tool excess adhesive from ends and edges of foam trim for a smooth void-free connection to the cement board substrate.
- After the adhesive has cured sufficiently to hold the build-out firmly in place, rasp the entire foam surface smooth.
- Complete the backwrapping procedure by applying the foam trim base coat to the exposed edges of the foam build-out and minimum 2-$^1/_2$ inches (64mm) onto the face. Pull the backwrap mesh around the foam build-out and fully embed it into the base coat. Use a corner trowel for neat straight corners.

- Apply the base coat to the foam build-out and approximately 3 inches (76mm) onto the adjacent cement board surfaces to an approximate thickness of $^1/_8$ inch (3mm). Immediately embed the reinforcing mesh in the wet base coat. Trowel from the center to the edges of the mesh to avoid wrinkles and remove excess base coat. Overlap mesh seams minimum 2-$^1/_2$ inches (64mm). Overlap mesh onto adjacent cement board wall surfaces minimum 2-$^1/_2$ inches (64mm) at terminations of the foam build-out and feather onto the cement board wall surface.

7. Reinforced Base Coat Installation

- Apply base coat over the cement board, including any areas of unreinforced foam trim/build-outs, with a stainless steel trowel to a uniform thickness of approximately $^1/_8$ inch (3mm).
- Work horizontally or vertically in strips of 40 inches (1016mm), and immediately embed the mesh into the wet base coat by troweling from the center to the edge of the mesh. Overlap mesh not less than 2-½ inches (64mm) at mesh seams and fully overlap mesh at accessories to the accessory "stop bead."
- Fully overlap backwrap reinforcing mesh along foam trim/build-outs if these surfaces have not yet been reinforced with base coat/mesh. Feather seams and edges.
- Double wrap all inside and outside corners with minimum 8 inch (203mm) overlap in each direction where mesh is used in lieu of a corner bead accessory.
- Avoid wrinkles in the mesh. The mesh must be fully embedded so that no mesh color shows through the base coat when it is dry. Re-skim with additional base coat if mesh color is visible or if necessary to correct planar irregularities in the wall surface.
- Allow base coat to thoroughly dry before applying primer or finish.
- Sloped Surfaces: for foam trim, reveals, aesthetic bands, cornice profiles, sills or other architectural features that project beyond the vertical wall plane more than 2 inches (51mm) apply waterproof base coat with a stainless steel trowel to the weather exposed sloped surface and minimum four inches (100mm) above and below it. Embed standard mesh or detail mesh in the waterproof base coat and overlap mesh seams a minimum of 2-½ inches (65mm). Allow base coat to thoroughly dry before applying primer or finish.

8. Primer Installation

- Apply primer evenly by brush or roller to the dry base coat surface.

9. Finish Installation

- Textured Finish
    - Apply finish to base coat or primed base coat and foam build-outs. Apply finish by spraying or troweling with a stainless steel trowel, depending on the finish specified. Follow these general rules for application of finish:
        - Avoid application in direct sunlight.
        - Apply finish in a continuous application and work a wet edge towards the unfinished wall area. Work to an architectural break in the wall before stopping to avoid cold joints.

- Weather conditions affect application and drying time. Hot or dry conditions limit working time and accelerate drying. Adjustments in the scheduling of work may be required to achieve desired results; cool or damp conditions extend working time and retard drying and may require added measures of protection against wind, dust, dirt, rain and freezing. Adjust work schedule and provide protection.
- Float “R” (rilled or swirl texture) finishes with a plastic float to achieve their rilled texture
- Do not install separate batches of finish side-by-side.
- Do not apply finish into or over sealant joints. Apply finish to outside face of wall only.
- Do not apply finish over irregular or unprepared surfaces or surfaces not in compliance with the requirements of the project specifications.
- Do not install finish over high pH ($\geq$ 10) surfaces or surfaces that have not been fully cured.

- Sto Signature or Specialty Finish Installation
  - Refer to applicable Installation Guide and/or Product Bulletin for selected finish.
- StoCast Finish Installation
  - Refer to applicable Application Guide and/or Product Bulletin for selected finish.
- Provide protection of installed materials from dust, dirt, precipitation, and freezing.
- Provide protection of installed primer and finish from dust, dirt, precipitation, freezing and continuous high humidity until fully dry.
- Provide sealant and backer material at cement board stucco terminations and at fixture penetrations through the cement board stucco to protect against air, water and insect infiltration. Provide weeps at floor lines, window and door heads, and other areas to conduct water to the exterior.

END OF SECTION 09 25 13.1

SECTION 092900 - GYPSUM BOARD

PART 1 - GENERAL

1.1 SUMMARY

A. Section Includes:

1. Interior gypsum board.
2. Tile backing panels.

1.2 ACTION SUBMITTALS

A. Product Data: For each type of product.

PART 2 - PRODUCTS

2.1 PERFORMANCE REQUIREMENTS

A. Fire-Resistance-Rated Assemblies: For fire-resistance-rated assemblies, provide materials and construction identical to those tested in assembly indicated according to ASTM E 119 by an independent testing agency.

2.2 GYPSUM BOARD, GENERAL

A. In addition to the following, comply with the requirements of the fire rated assemblies on the drawings.

2.3 INTERIOR GYPSUM BOARD

A. Manufacturers: Subject to compliance with requirements, provide products by one of the following:
1. CertainTeed Corp.
2. Georgia-Pacific Gypsum LLC.
3. Lafarge North America Inc.
4. National Gypsum Company.
5. USG Corporation.

B. Gypsum Wallboard: ASTM C 1396/C 1396M.

C. Gypsum Board, Type X: ASTM C 1396/C 1396M.

1. Thickness: 5/8 inch (15.9 mm).
2. Long Edges: Tapered.

D. Gypsum Ceiling Board: ASTM C 1396/C 1396M.

1. Thickness: 1/2 inch (12.7 mm).
2. Long Edges: Tapered.

E. Moisture- and Mold-Resistant Gypsum Board: ASTM C 1396/C 1396M. With moisture- and mold-resistant core and paper surfaces.

1. Core: 5/8 inch (15.9 mm), Type X.
2. Long Edges: Tapered.
3. Mold Resistance: ASTM D 3273, score of 10 as rated according to ASTM D 3274.

2.4 SPECIALTY GYPSUM BOARD

A. Gypsum Board, Type C: ASTM C 1396/C 1396M. Manufactured to have increased fire-resistive capability.

2.5 TILE BACKING PANELS

A. Cementitious Backer Units: ANSI A118.9 and ASTM C 1288 or 1325, with manufacturer's standard edges.

1. Products: Subject to compliance with requirements, provide one of the following:
   a. CertainTeed Corp.; Fiber-Cement Backer-Board]
   b. National Gypsum Company, Permabase Cement Board.
   c. USG Corporation; DUROCK Cement Board.

2. Thickness: 5/8 inch (15.9 mm).
3. Mold Resistance: ASTM D 3273, score of 10 as rated according to ASTM D 3274.

B. Water-Resistant Gypsum Backing Board: ASTM C 1396/C 1396M, with manufacturer's standard edges.

1. Manufacturers: Subject to compliance with requirements-provide products by one of the following:
   a. CertainTeed Corp.
   b. Georgia-Pacific Gypsum LLC.
   c. Lafarge North America Inc.
   d. USG Corporation.

2. Core: 5/8 inch (15.9 mm), Type X.

3. Thickness: As required by fire-resistance-rated assembly indicated on Drawings.
4. Long Edges: Tapered.

2.6 TRIM ACCESSORIES

A. Interior Trim: ASTM C 1047.

1. Material: Galvanized or aluminum-coated steel sheet, rolled zinc, plastic, or paper-faced galvanized steel sheet.

B. Aluminum Trim: ASTM B 221 (ASTM B 221M), Alloy 6063-T5.

2.7 JOINT TREATMENT MATERIALS

A. General: Comply with ASTM C 475/C 475M.

B. Joint Tape:

1. Interior Gypsum Board: Paper.
2. Tile Backing Panels: As recommended by panel manufacturer.

C. Joint Compound for Interior Gypsum Board: For each coat use formulation that is compatible with other compounds applied on previous or for successive coats.

2.8 AUXILIARY MATERIALS

A. Steel Drill Screws: ASTM C 1002, unless otherwise indicated.

B. Thermal Insulation: As specified in Section 072100 "Thermal Insulation."

PART 3 - EXECUTION

3.1 APPLYING AND FINISHING PANELS

A. Comply with ASTM C 840.

B. Examine panels before installation. Reject panels that are wet, moisture damaged, and mold damaged.

C. Isolate perimeter of gypsum board applied to non-load-bearing partitions at structural abutments, except floors. Provide 1/4- to 1/2-inch- (6.4- to 12.7-mm-) wide spaces at these locations and trim edges with edge trim where edges of panels are exposed. Seal joints between edges and abutting structural surfaces with acoustical sealant.

D. Install trim with back flanges intended for fasteners, attach to framing with same fasteners used for panels. Otherwise, attach trim according to manufacturer's written instructions.
1. Control Joints: Install control joints according to ASTM C 840 and in specific locations approved by Architect for visual effect.

E. Prefill open joints, rounded or beveled edges, and damaged surface areas.

F. Apply joint tape over gypsum board joints, except for trim products specifically indicated as not intended to receive tape.

G. Gypsum Board Finish Levels: Finish panels to levels indicated below and according to ASTM C 840:

1. Level 1: Ceiling plenum areas, concealed areas, and where indicated.
2. Level 2: Panels that are substrate for tile.

3. Level 4: At panel surfaces that will be exposed to view unless otherwise indicated

a. Primer and its application to surfaces are specified in Section 099123 "Interior Painting."

H. Protect adjacent surfaces from drywall compound and texture finishes and promptly remove from floors and other non-drywall surfaces. Repair surfaces stained, marred, or otherwise damaged during drywall application.

I. Remove and replace panels that are wet, moisture damaged, and mold damaged.

END OF SECTION 092900

SECTION 101100 - VISUAL DISPLAY UNITS

PART 1 - GENERAL

1.1 SUMMARY

A. Section Includes:

1. Visual display board assemblies.
2. Sliding visual display units.
3. Visual display conference units.
4. Black glass markerboards.

1.2 ACTION SUBMITTALS

A. Product Data: For each type of product.

B. Shop Drawings: For visual display units.

1. Include plans, elevations, sections, details, and attachment to other work.
2. Show locations of panel joints

C. Samples: For each type of visual display unit indicated.

D. Product Schedule: For visual display units.

1.3 INFORMATIONAL SUBMITTALS

A. Sample warranties.

1.4 CLOSEOUT SUBMITTALS

A. Maintenance data.

1.5 WARRANTY

A. Special Warranty for Porcelain-Enamel Face Sheets: Manufacturer agrees to repair or replace porcelain-enamel face sheets that fail in materials or workmanship within specified warranty period.

1. Warranty Period: **50** years from date of Substantial Completion.

PART 2 - PRODUCTS

2.1 PERFORMANCE REQUIREMENTS

A. Surface-Burning Characteristics: Comply with ASTM E84; testing by a qualified testing agency. Identify products with appropriate markings of applicable testing agency.

1. Flame-Spread Index: **25** or less.
2. Smoke-Developed Index: **450** or less.

2.2 VISUAL DISPLAY BOARD ASSEMBLY.

A. Manufacturer's include but are not limited to the following.
1. ASI Visual Display Products.
2. Claridge Products.

B. Visual Display Board Assembly: **factory** fabricated.

1. Assembly: M**arkerboard and tackboard**.
2. Corners: **Square**.
3. Width: **As indicated on Drawings**.
4. Height: **As indicated on Drawings**.

C. Markerboard Panel: **Porcelain-enamel-faced** markerboard panel on core indicated.

1. Color: **As selected by Architect from full range of industry colors**.

D. Tackboard Panel: **Vinyl-fabric-faced** tackboard panel on core indicated.

1. Fabric Wrapped Edge: Wrap edge of tackboard panel with fabric facing.
2. Color and Pattern: **As selected by Architect from full range of industry colors**.

E. Aluminum Frames **and Trim**: Fabricated from not less than 0.062-inch- (1.57-mm-) thick, extruded aluminum; [**standard size and shape**].

1. Field-Applied Trim: Manufacturer's standard, **snap-on trim with no visible screws or exposed joints**.
2. Aluminum Finish: **Clear anodic**finish.

F. Joints: Make joints only where total length exceeds maximum manufactured length. Fabricate with minimum number of joints, **balanced around center of board, as acceptable to Architect**, **as indicated on approved Shop Drawings**.

G. Combination Assemblies: Provide **H-trim** between abutting sections of visual display panels.

H. Chalktray: Manufacturer's standard; continuous.

1. Solid Type: Extruded aluminum with ribbed section and smoothly curved exposed ends.
2. Tackboard Insert Color: **As selected by Architect from full range of industry colors**].
3. Aluminum Color: Match finish of visual display assembly trim.

2.3 TACKBOARD PANELS

A. Tackboard Panels:
1. Facing: **Vinyl**fabric factory laminated to **1/4-inch- (6-mm-)** thick, cork sheet.
2. F
3. Core: Manufacturer's standard.

2.4 MATERIALS

A. Porcelain-Enamel Face Sheet: PEI-1002, with face sheet manufacturer's standard two- or three-coat process.

B. Natural-Cork Sheet: Seamless, single-layer, compressed fine-grain cork sheet; bulletin board quality; face sanded for natural finish[**; with surface-burning characteristics indicated**].

C. Vinyl Fabric: Mildew resistant, washable, complying with ASTM F793/F793M, Type II, **burlap weave**; weighing not less than 13 oz./sq. yd. (440 g/sq. m); with surface-burning characteristics indicated.

D. Polyester Fabric: Nondirectional weave, 100 percent polyester; weighing not less than 15 oz./sq. yd. (508 g/sq. m); with surface-burning characteristics indicated.

E. Hardboard: ANSI A135.4, tempered.

F. Particleboard: ANSI A208.1, Grade M-1.

G. MDF: ANSI A208.2, Grade 130.

H. Fiberboard: ASTM C208 cellulosic fiber insulating board.

I. Extruded Aluminum: ASTM B221 (ASTM B221M), Alloy 6063.

J. Adhesives for Field Application: Mildew-resistant, nonstaining adhesive for use with specific type of panels, sheets, or assemblies; and for substrate application; as recommended in writing by visual display unit manufacturer.

2.5 ALUMINUM FINISHES

A. Clear Anodic Finish: AAMA 611, AA-M12C22A31, Class II, 0.010 mm or thicker.

PART 3 - EXECUTION

3.1 INSTALLATION

A. General: Install visual display surfaces in locations and at mounting heights indicated on Drawings, or if not indicated, at heights indicated below. Keep perimeter lines straight, level, and plumb. Provide grounds, clips, backing materials, adhesives, brackets, anchors, trim, and accessories necessary for complete installation.

1. Make joints only where total length exceeds maximum manufactured length. Fabricate with minimum number of joints, **balanced around center of board, as acceptable to Architect**.
2. Where size of visual display board assemblies or other conditions require support in addition to normal trim, provide structural supports or modify trim as indicated or as selected by Architect from manufacturer's standard structural support accessories to suit conditions indicated.

B. Factory-Fabricated Visual Display Board Assemblies: Adhere to wall surfaces with **egg-size**] adhesive gobs at 16 inches (400 mm) o.c., horizontally and vertically.

C. Factory-Fabricated Visual Display Board Assemblies: Attach concealed clips, hangers, and grounds to wall surfaces and to visual display board assemblies with fasteners at not more than 16 inches (400 mm) o.c. Secure tops and bottoms of boards to walls.

END OF SECTION 101100

SECTION 101416 - PLAQUES

PART 1 - GENERAL

1.1 SUMMARY

A. Section Includes:

1. Metal plaques.

1.2 DEFINITIONS

A. Accessible: In accordance with the accessibility standard.

1.3 ACTION SUBMITTALS

A. Product Data: For each type of product.

B. Shop Drawings: For plaques.

1. Include fabrication and installation details and attachments to other work.
2. Show plaque mounting heights, locations of supplementary supports to be provided by other installers, and accessories.
3. Show message list, **including raised characters** and layout for each plaque at least **half size**.

C. Samples for Initial Selection: For each type of plaque, exposed component, and exposed finish.

1. Include representative Samples of available typestyles and graphic symbols.

D. Samples for Verification: For each type of plaque showing all components and with the required finish(es), in manufacturer's standard size unless otherwise indicated and as follows:

1. Plaques: **Half-size Sample**.

E. Product Schedule: For plaques. Use same designations indicated on Drawings or specified.

1.4 CLOSEOUT SUBMITTALS

1.5 QUALITY ASSURANCE

A. Installer Qualifications: **Manufacturer of products**.

1.6 WARRANTY

A. Special Warranty: Manufacturer agrees to repair or replace components of plaques that fail in materials or workmanship within specified warranty period.

1. Failures include, but are not limited to, the following:

a. Deterioration of finishes beyond normal weathering.
b. Deterioration of embedded graphic image.

2. Warranty Period: **Five**] years from date of Substantial Completion.

PART 2 - PRODUCTS

2.1 METAL PLAQUES

A. Cast Plaque: Cast-metal plaque with background texture, border, and characters having uniform faces, sharp corners, and precisely formed lines and profiles; and as follows:
1. Plaque Material: Cast **bronze**.
2. **0.50 inch (12.7 mm)**.
3. Finishes:

a. **As selected by Architect from full range of industry finishes**.

4. Background Texture: **As selected by Architect from manufacturer's full range**].
5. Integrally Cast Border Style: **Plain bevel, polished**.
6. Mounting: **Concealed studs**].
7. Text and Typeface: **Typeface as selected by Architect from manufacturer's full range and variable content as scheduled**.

2.2 MATERIALS

A. Bronze Castings: ASTM B584, **alloy recommended by manufacturer and finisher for finish indicated**.

2.3 ACCESSORIES

A. Fasteners and Anchors: Manufacturer's standard as required for secure anchorage of plaques, noncorrosive and compatible with each material joined, and complying with the following:

1. Use concealed fasteners and anchors unless indicated to be exposed.
2. For exterior exposure, furnish **stainless steel**devices unless otherwise indicated.

3. Plaque Mounting Fasteners:

a. Concealed Studs: Concealed (blind), threaded studs welded or brazed to back of plaque, screwed into back of plaque, or screwed into tapped lugs cast integrally into back of plaque unless otherwise indicated.

B. Adhesive: As recommended by plaque manufacturer.

C. Bituminous Paint: Cold-applied asphalt emulsion complying with ASTM D1187/D1187M.

2.4 FABRICATION

A. General: Provide manufacturer's standard plaques according to requirements indicated.

1. Preassemble plaques in the shop to greatest extent possible. Disassemble plaques only as necessary for shipping and handling limitations. Clearly mark units for reassembly and installation; apply markings in locations concealed from view after final assembly.
2. Mill joints to a tight, hairline fit. Form assemblies and joints exposed to weather to resist water penetration and retention.
3. Comply with AWS for recommended practices in welding and brazing. Provide welds and brazes behind finished surfaces without distorting or discoloring exposed side. Clean exposed welded and brazed connections of flux, and dress exposed and contact surfaces.
4. Conceal connections if possible; otherwise, locate connections where they are inconspicuous.
5. Provide rabbets, lugs, and tabs necessary to assemble components and to attach to existing work. Drill and tap for required fasteners. Use concealed fasteners where possible; use exposed fasteners that match plaque finish.
6. Castings: Fabricate castings free of warp, cracks, blowholes, pits, scale, sand holes, and other defects that impair appearance or strength. Grind, wire brush, sandblast, and buff castings to remove seams, gate marks, casting flash, and other casting marks before finishing.

2.5 GENERAL FINISH REQUIREMENTS

A. Protect mechanical finishes on exposed surfaces from damage by applying a strippable, temporary protective covering before shipping.

B. Appearance of Finished Work: Noticeable variations in same piece are not acceptable. Variations in appearance of adjoining components are acceptable if they are within the range of approved Samples and are assembled or installed to minimize contrast.

C. Directional Finishes: Run grain with long dimension of each piece and perpendicular to long dimension of finished trim or border surface unless otherwise indicated.

D. Organic, Anodic, and Chemically Produced Finishes: Apply to formed metal after fabrication but before applying contrasting polished finishes on raised features unless otherwise indicated.

PART 3 - EXECUTION

3.1 EXAMINATION

A. Examine substrates, areas, and conditions, with Installer present, for compliance with requirements for installation tolerances and other conditions affecting performance.

B. Verify that plaque-support surfaces are within tolerances to accommodate plaques without gaps or irregularities between backs of plaques and support surfaces unless otherwise indicated.

C. Proceed with installation only after unsatisfactory conditions have been corrected.

3.2 INSTALLATION OF METAL PLAQUES

A. General: Install plaques using mounting methods indicated and according to manufacturer's written instructions.

1. Install plaques level, plumb, true to line, and at locations and heights indicated, with plaque surfaces free of distortion and other defects in appearance.
2. Install plaques so they do not protrude or obstruct according to the accessibility standard.
3. Before installation, verify that plaque surfaces are clean and free of materials or debris that would impair installation.
4. Corrosion Protection: Coat concealed surfaces of exterior aluminum in contact with grout, concrete, masonry, wood, or dissimilar metals, with a heavy coat of bituminous paint.

B. Mounting Methods:

1. Concealed Studs: Using a template, drill holes in substrate aligning with studs on back of plaque. Remove loose debris from hole and substrate surface.
    a. Masonry Substrates: Fill holes with adhesive. Leave recess space in hole for displaced adhesive. Place plaque in position and push until flush to surface, embedding studs in holes. Temporarily support plaque in position until adhesive fully sets.
    b. Thin or Hollow Surfaces: Place plaque in position and flush to surface, install washers and nuts on studs projecting through opposite side of surface, and tighten.
2. Adhesive: Clean bond-breaking materials from substrate surface and remove loose debris. Apply linear beads or spots of adhesive symmetrically to back of plaque and of suitable quantity to support weight of plaque after cure without slippage. Keep adhesive away from edges to prevent adhesive extrusion as plaque is applied and to prevent visibility of cured adhesive at plaque edges. Place plaque in position, and push to engage adhesive. Temporarily support plaque in position until adhesive fully sets.
3. Shim-Plate Mounting: Provide 1/8-inch- (3-mm-) thick, concealed aluminum shim plates with predrilled and countersunk holes, at locations indicated, and where other direct

mounting methods are impractical. Attach plate with fasteners and anchors suitable for secure attachment to substrate. Attach plaques to plate using **method specified above**.

3.3 ADJUSTING AND CLEANING

A. Remove and replace damaged or deformed plaques and plaques that do not comply with specified requirements. Replace plaques with damaged or deteriorated finishes or components that cannot be successfully repaired by finish touchup or similar minor repair procedures.

B. Remove temporary protective coverings and strippable films as plaques are installed.

C. On completion of installation, clean exposed surfaces of plaques according to manufacturer's written instructions, and touch up minor nicks and abrasions in finish. Maintain plaques in a clean condition during construction and protect from damage until acceptance by Owner.

END OF SECTION 101416

THIS PAGE LEFT INTENTIONALLY BLANK

SECTION 101419 - DIMENSIONAL LETTER SIGNAGE

PART 1 - GENERAL

1.1 SUMMARY

A. Section Includes:

1. Dimensional characters.

a. Cast dimensional characters.

1.2 ACTION SUBMITTALS

A. Product Data: For each type of product

B. Shop Drawings: For signs.

1. Include fabrication and installation details and attachments to other work.
2. Show sign mounting heights, locations of supplementary supports to be provided by other installers, and accessories.
3. Show message list, typestyles, graphic elements, and layout for each sign at least **half size**.

C. Samples: For each exposed product and for each color and texture specified.

1.3 INFORMATIONAL SUBMITTALS

A. Sample warranty.

1.4 CLOSEOUT SUBMITTALS

A. Maintenance data.

1.5 WARRANTY

A. Special Warranty: Manufacturer agrees to repair or replace components of signs that fail in materials or workmanship within specified warranty period.

1. Warranty Period: **Five** years from date of Substantial Completion.

PART 2 - PRODUCTS

\

2.1 PERFORMANCE REQUIREMENTS

A. Thermal Movements: For exterior **fabricated channel dimensional characters**, allow for thermal movements from ambient and surface temperature changes.

1. Temperature Change: **120 deg F (67 deg C), ambient; 180 deg F (100 deg C), material surfaces**.

2.2 DIMENSIONAL CHARACTERS

A. Cast Characters: Characters with uniform faces, sharp corners, and precisely formed lines and profiles, and as follows:

1. Manufacturer's include but are not limited to the following:
   a. ASI Sign Systems
   b. Gemini Inc.
   c. Metallic Arts
2. Character Material: Cast **aluminum**.
3. Character Height: **As indicated on Drawings**.
4. Finishes:

   a. Integral Metal Finish: **As selected by Architect from full range of industry finishes**.

5. Mounting: **Concealed studs**.

2.3 DIMENSIONAL CHARACTER MATERIALS

A. Bronze Castings: ASTM B584, **alloy recommended by manufacturer and finisher for finish indicated**.

2.4 ACCESSORIES

A. Fasteners and Anchors: Manufacturer's standard as required for secure anchorage of signs, noncorrosive and compatible with each material joined, and complying with the following:

1. Use concealed fasteners and anchors unless indicated to be exposed.
2. For exterior exposure, furnish **stainless steel** devices unless otherwise indicated.
3. Exposed Metal-Fastener Components, General:

   a. Fabricated from same basic metal and finish of fastened metal unless otherwise indicated.

4. Sign Mounting Fasteners:

   a. Concealed Studs: Concealed (blind), threaded studs welded or brazed to back of sign material, screwed into back of sign assembly, or screwed into tapped lugs cast integrally into back of cast sign material, unless otherwise indicated.

B. Adhesive: As recommended by sign manufacturer.

C. Bituminous Paint: Cold-applied asphalt emulsion complying with ASTM D1187/D1187M.

2.5 FABRICATION

A. General: Provide manufacturer's standard sign assemblies according to requirements indicated.

1. Mill joints to a tight, hairline fit. Form assemblies and joints exposed to weather to resist water penetration and retention.
2. Provide welds and brazes behind finished surfaces without distorting or discoloring exposed side. Clean exposed welded and brazed connections of flux, and dress exposed and contact surfaces.
3. Conceal connections if possible; otherwise, locate connections where they are inconspicuous.
4. Internally brace dimensional characters for stability, to meet structural performance loading without oil-canning or other surface deformation, and for securing fasteners.
5. Provide rabbets, lugs, and tabs necessary to assemble components and to attach to existing work. Drill and tap for required fasteners. Use concealed fasteners where possible; use exposed fasteners that match sign finish.
6. Castings: Fabricate castings free of warp, cracks, blowholes, pits, scale, sand holes, and other defects that impair appearance or strength. Grind, wire brush, sandblast, and buff castings to remove seams, gate marks, casting flash, and other casting marks before finishing.

PART 3 - EXECUTION

3.1 INSTALLATION OF DIMENSIONAL CHARACTERS

A. General: Install signs using mounting methods indicated and according to manufacturer's written instructions.

1. Install signs level, plumb, true to line, and at locations and heights indicated, with sign surfaces free of distortion and other defects in appearance.
2. Before installation, verify that sign surfaces are clean and free of materials or debris that would impair installation.
3. Corrosion Protection: Coat concealed surfaces of exterior aluminum in contact with grout, concrete, masonry, wood, or dissimilar metals, with a heavy coat of bituminous paint.

B. Mounting Methods:

1. Concealed Studs: Using a template, drill holes in substrate aligning with studs on back of sign. Remove loose debris from hole and substrate surface.

    a. Masonry Substrates: Fill holes with adhesive. Leave recess space in hole for displaced adhesive. Place sign in position and push until flush to surface, embedding studs in holes. Temporarily support sign in position until adhesive fully sets.
    b. Thin or Hollow Surfaces: Place sign in position and flush to surface, install washers and nuts on studs projecting through opposite side of surface, and tighten.

C. Remove temporary protective coverings and strippable films as signs are installed.

END OF SECTION 101419

SECTION 10 14 23 - ROOM IDENTIFICATION PANEL SIGNAGE

PART 1 - GENERAL

1.1 SUMMARY

A. This Section includes the following:
   1. Interior and Exterior Panel signs.
   2. Signage accessories.

1.2 SUBMITTALS

A. Product Data: For each type of product indicated.
B. **Provide signage schedule for acceptance by Architect and Owner. Room names and numbers shall be based requirements established for this campus.**
C. Shop Drawings: Show fabrication and installation details for signs.
   1. Show sign mounting heights, locations of supplementary supports to be provided by others, and accessories.
   2. Provide message list, typestyles, graphic elements, including tactile characters and Braille, and layout for each sign.
D. Samples: For each sign type and for each color and texture required.

1.3 QUALITY ASSURANCE

A. Signage shall comply with the requirements of the Florida Accessibility chapter of the Florida Building Code-Buildings and with the requirements of the Authority Having Jurisdiction.
B. Source Limitations: Obtain each sign type through one source from a single manufacturer.
C. Regulatory Requirements: Comply with the Florida Building Code, Americans Disabilities Act (ADA) and with the code provisions as adopted by authorities having jurisdiction.

1.4 PROJECT CONDITIONS

A. Field Measurements: Where sizes of signs are determined by dimensions of surfaces on which they are installed, verify dimensions by field measurement before fabrication and indicate measurements on Shop Drawings.

PART 2 - PRODUCTS

2.1 MATERIALS

A. Acrylic Sheet: ASTM D 4802, Category A-1 (cell-cast sheet), Type UVA (UV absorbing).
B. Aluminum Extrusions: ASTM B 221 (ASTM B 221 M), alloy and temper recommended by aluminum producer and finisher for type of use and finish indicated, and with at least the strength and durability properties of Alloy 6063-T5.

2.2 PANEL SIGNS

A. General: All lettering & symbols shall be raised polymer and integral with panel. Vinyl lettering is not acceptable.
B. Manufacturers: Subject to compliance with requirements, provide products by one of the following:
   1. Allen Industries Architectural Signage
   2. Best Sign Systems Inc.
   3. Innerface Sign Systems, Inc.

4. Multi-graphics Incorporated.

C. Interior Panel Signs: Provide smooth sign panel surfaces constructed to remain flat under installed conditions within a tolerance of plus or minus 1/16 inch (1.5 mm) measured diagonally from corner to corner, complying with the following requirements:
   1. Acrylic Sheet: Minimum 0.080 inch (2.03 mm) thick.
   2. Edge Condition: Bull nose.
   3. Corner Condition: Rounded to radius indicated.
   4. Mounting: Unframed.
      a. Wall mounted with adhesive, two-face tape only used for temporary mounting, while adhesive sets.
      b. Manufacturer's standard anchors for substrates encountered.
   5. Test Type: San Serf
   6. Text Size: 5/8-inch to 2-inch high by 1/32 inch thick
   7. Tactile Characters: Characters and Grade 2 Braille raised 1/32 inch (0.8 mm) above surface with contrasting colors.
   8. Location: As indicated on the drawings.
   9. Color: Color: Match existing.

D. Exterior Panel Signs: Provide smooth sign panel surfaces constructed to remain flat under installed conditions within a tolerance of plus or minus 1/16 inch (1.5 mm) measured diagonally from corner to corner, complying with the following requirements:
   1. Acrylic Sheet: Minimum 0.080 inch (2.03 mm) thick.
   2. Edge Condition: Bull nose.
   3. Corner Condition: Rounded to radius indicated.
   4. Mounting: Unframed.
      a. Wall mounted.
      b. Manufacturer's standard noncorroding anchors for substrates encountered.
   5. Tactile Characters: Characters and Grade 2 Braille raised 1/32 inch (0.8 mm) above surface with contrasting colors.
   6. Location: As indicated on the drawings.
   7. Color: Match existing.

E. Tactile and Braille Sign: Manufacturer's standard process for producing text and symbols complying with ADA-ABA Accessibility Guidelines and with ICC/ANSI A117.1. Text shall be accompanied by Grade 2 Braille. Produce precisely formed characters with square-cut edges free from burrs and cut marks; Braille dots with domed or rounded shape.
   1. Panel Material: Opaque acrylic sheet.
   2. Raised-Copy Thickness: Not less than 1/32 inch (0.8 mm).

F. Colored Coatings for Acrylic Sheet: For copy and background and frame colors, provide colored coatings, including inks, dyes, and paints, that are recommended by acrylic manufacturers for optimum adherence to acrylic surface and are UV and water resistant for five years for application intended.

G. Color: Match existing.

2.3 ACCESSORIES

A. Anchors and Inserts: Provide nonferrous-metal or hot-dip galvanized anchors and inserts for exterior installations and elsewhere as required for corrosion resistance. Use toothed steel or lead expansion-bolt devices for drilled-in-place anchors. Furnish inserts, as required, to be set into concrete or masonry work.

2.4 FABRICATION

A. General: Provide manufacturer's standard signs of configurations indicated.
   1. Welded Connections: Comply with AWS standards for recommended practices in shop welding. Provide welds behind finished surfaces without distortion or discoloration of exposed side. Clean exposed welded surfaces of welding flux and dress exposed and contact surfaces.

2. Mill joints to tight, hairline fit. Form joints exposed to weather to exclude water penetration.
3. Conceal fasteners if possible; otherwise, locate fasteners where they will be inconspicuous.

2.5 ACRYLIC SHEET FINISHES

A. Colored Coatings for Acrylic Sheet: For copy and background and frame colors, provide colored coatings, including inks, dyes, and paints, that are recommended by acrylic manufacturers for optimum adherence to acrylic surface and that are UV and water resistant for five years for application intended.

B. Color: Match existing.

PART 3 - EXECUTION

3.1 INSTALLATION

A. Locate signs and accessories where indicated, in full compliance with Accessibility Code, using mounting methods of types described and complying with manufacturer's written instructions.
   1. Install signs level, plumb, and at heights indicated, with sign surfaces free of distortion and other defects in appearance.
   2. Wall Signs: Install signs on walls adjacent to latch side of door. Where not indicated or possible, such as double doors, install signs on nearest adjacent walls. Locate to allow approach within 3 inches (75 mm) of sign without encountering protruding objects or standing within swing of door.

B. Wall-Mounted Signs: Comply with sign manufacturer's written instructions except where more stringent requirements apply.
   1. Two-face Tape: Mount sign to smooth, nonporous surfaces: Temporary method only. Use silicone – adhesive mounting as recommended per manufacturer.

3.2 CLEANING AND PROTECTION

A. After installation, clean soiled sign surfaces according to manufacturer’s written instructions. Protect signs from damage until acceptance by Owner.

END OF SECTION 10 14 00

THIS PAGE LEFT INTENTIONALLY BLANK.

SECTION 101416 - PLAQUES

PART 1 - GENERAL

1.1 SUMMARY

A. Section Includes:

1. Metal plaques.

1.2 DEFINITIONS

A. Accessible: In accordance with the accessibility standard.

1.3 ACTION SUBMITTALS

A. Product Data: For each type of product.

B. Shop Drawings: For plaques.

1. Include fabrication and installation details and attachments to other work.
2. Show plaque mounting heights, locations of supplementary supports to be provided by other installers, and accessories.
3. Show message list, **including raised characters** and layout for each plaque at least **half size**.

C. Samples for Initial Selection: For each type of plaque, exposed component, and exposed finish.

1. Include representative Samples of available typestyles and graphic symbols.

D. Samples for Verification: For each type of plaque showing all components and with the required finish(es), in manufacturer's standard size unless otherwise indicated and as follows:

1. Plaques: material sample

E. Product Schedule: For plaques. Use same designations indicated on Drawings or specified.

1.4 APPROVED MANUFACTURER/PROVIDER

1. PROVIDE PLAQUE FROM APPROVED MANUFACTURER:

ADVANCED SIGN SOLUTIONS, 7518 MCELVEY RD, PANAMA CITY BEACH, FL 32408 WWW.ADV-SIGNS.COM, 888.368.9928; 850.914.9925; SUPPORT@ADV-SIGNS.COM

1.5 QUALITY ASSURANCE

A. Installer Qualifications: **Approved Manufacturer/Provider listed in 1.4**

1.6 WARRANTY

A. Special Warranty: Manufacturer agrees to repair or replace components of plaques that fail in materials or workmanship within specified warranty period.

1. Failures include, but are not limited to, the following:

a. Deterioration of finishes beyond normal weathering.
b. Deterioration of embedded graphic image.

2. Warranty Period: **Five** years from date of Substantial Completion.

PART 2 - PRODUCTS

2.1 METAL PLAQUES

A. Precision Tooled Plaque: Precision tooled aluminum plaque with background texture, border, and characters having uniform faces, sharp corners, and precisely formed lines and profiles; and as follows:
1. Plaque Material: Cast **aluminum**
2. **20x24in**
3. **5/16in**
4. Finishes:

a. **Satin finish**

5. Background Texture: **pebble**
6. Integrally Cast Border Style: **bevel – single line bevel**
7. Mounting: **Concealed studs**].
8. Text and Typeface: **brushed clear, horizontal stroke**

2.2 MATERIALS

A. Cast or Precision Tooled Aluminum

2.3 ACCESSORIES

A. Fasteners and Anchors: Manufacturer's standard as required for secure anchorage of plaques, noncorrosive and compatible with each material joined, and complying with the following:

1. Use concealed fasteners and anchors unless indicated to be exposed.

2. For exterior exposure, furnish **stainless steel** devices unless otherwise indicated.

3. Plaque Mounting Fasteners:

   a. Concealed Studs: Concealed (blind), threaded studs welded or brazed to back of plaque, screwed into back of plaque, or screwed into tapped lugs cast integrally into back of plaque unless otherwise indicated.

B. Adhesive: As recommended by plaque manufacturer.

C. Bituminous Paint: Cold-applied asphalt emulsion complying with ASTM D1187/D1187M.

2.4 FABRICATION

A. General: Provide manufacturer's standard plaques according to requirements indicated.

1. Preassemble plaques in the shop to greatest extent possible. Disassemble plaques only as necessary for shipping and handling limitations. Clearly mark units for reassembly and installation; apply markings in locations concealed from view after final assembly.
2. Mill joints to a tight, hairline fit. Form assemblies and joints exposed to weather to resist water penetration and retention.
3. Comply with AWS for recommended practices in welding and brazing. Provide welds and brazes behind finished surfaces without distorting or discoloring exposed side. Clean exposed welded and brazed connections of flux, and dress exposed and contact surfaces.
4. Conceal connections if possible; otherwise, locate connections where they are inconspicuous.
5. Provide rabbets, lugs, and tabs necessary to assemble components and to attach to existing work. Drill and tap for required fasteners. Use concealed fasteners where possible; use exposed fasteners that match plaque finish.
6. Castings: Fabricate castings free of warp, cracks, blowholes, pits, scale, sand holes, and other defects that impair appearance or strength. Grind, wire brush, sandblast, and buff castings to remove seams, gate marks, casting flash, and other casting marks before finishing.

2.5 GENERAL FINISH REQUIREMENTS

A. Protect mechanical finishes on exposed surfaces from damage by applying a strippable, temporary protective covering before shipping.

B. Appearance of Finished Work: Noticeable variations in same piece are not acceptable. Variations in appearance of adjoining components are acceptable if they are within the range of approved Samples and are assembled or installed to minimize contrast.

C. Directional Finishes: Run grain with long dimension of each piece and perpendicular to long dimension of finished trim or border surface unless otherwise indicated.

D. Organic, Anodic, and Chemically Produced Finishes: Apply to formed metal after fabrication but before applying contrasting polished finishes on raised features unless otherwise indicated.

PART 3 - EXECUTION

3.1 EXAMINATION

A. Examine substrates, areas, and conditions, with Installer present, for compliance with requirements for installation tolerances and other conditions affecting performance.

B. Verify that plaque-support surfaces are within tolerances to accommodate plaques without gaps or irregularities between backs of plaques and support surfaces unless otherwise indicated.

C. Proceed with installation only after unsatisfactory conditions have been corrected.

3.2 INSTALLATION OF METAL PLAQUES

A. General: Install plaques using mounting methods indicated and according to manufacturer's written instructions.

1. Install plaques level, plumb, true to line, and at locations and heights indicated, with plaque surfaces free of distortion and other defects in appearance.
2. Install plaques so they do not protrude or obstruct according to the accessibility standard.
3. Before installation, verify that plaque surfaces are clean and free of materials or debris that would impair installation.
4. Corrosion Protection: Coat concealed surfaces of exterior aluminum in contact with grout, concrete, masonry, wood, or dissimilar metals, with a heavy coat of bituminous paint.

B. Mounting Methods:

1. Concealed Studs: Using a template, drill holes in substrate aligning with studs on back of plaque. Remove loose debris from hole and substrate surface.
    a. Masonry Substrates: Fill holes with adhesive. Leave recess space in hole for displaced adhesive. Place plaque in position and push until flush to surface, embedding studs in holes. Temporarily support plaque in position until adhesive fully sets.
    b. Thin or Hollow Surfaces: Place plaque in position and flush to surface, install washers and nuts on studs projecting through opposite side of surface, and tighten.
2. Adhesive: Clean bond-breaking materials from substrate surface and remove loose debris. Apply linear beads or spots of adhesive symmetrically to back of plaque and of suitable quantity to support weight of plaque after cure without slippage. Keep adhesive away from edges to prevent adhesive extrusion as plaque is applied and to prevent visibility of cured adhesive at plaque edges. Place plaque in position, and push to engage adhesive. Temporarily support plaque in position until adhesive fully sets.
3. Shim-Plate Mounting: Provide 1/8-inch- (3-mm-) thick, concealed aluminum shim plates with predrilled and countersunk holes, at locations indicated, and where other direct

mounting methods are impractical. Attach plate with fasteners and anchors suitable for secure attachment to substrate. Attach plaques to plate using **method specified above**.

3.3 ADJUSTING AND CLEANING

A. Remove and replace damaged or deformed plaques and plaques that do not comply with specified requirements. Replace plaques with damaged or deteriorated finishes or components that cannot be successfully repaired by finish touchup or similar minor repair procedures.

B. Remove temporary protective coverings and strippable films as plaques are installed.

C. On completion of installation, clean exposed surfaces of plaques according to manufacturer's written instructions, and touch up minor nicks and abrasions in finish. Maintain plaques in a clean condition during construction and protect from damage until acceptance by Owner.

END OF SECTION 101416

THIS PAGE LEFT INTENTIONALLY BLANK

SECTION 101419 - DIMENSIONAL LETTER SIGNAGE

PART 1 - GENERAL

1.1 SUMMARY

A. Section Includes:

1. Dimensional characters.

a. Cast dimensional characters.

1.2 ACTION SUBMITTALS

A. Product Data: For each type of product

B. Shop Drawings: For signs.

1. Include fabrication and installation details and attachments to other work.
2. Show sign mounting heights, locations of supplementary supports to be provided by other installers, and accessories.
3. Show message list, typestyles, graphic elements, and layout for each sign at least **half size**.

C. Samples: For each exposed product and for each color and texture specified.

1.3 INFORMATIONAL SUBMITTALS

A. Sample warranty.

1.4 CLOSEOUT SUBMITTALS

A. Maintenance data.

1.5 WARRANTY

A. Special Warranty: Manufacturer agrees to repair or replace components of signs that fail in materials or workmanship within specified warranty period.

1. Warranty Period: **Five** years from date of Substantial Completion.

PART 2 - PRODUCTS

\

2.1 PERFORMANCE REQUIREMENTS

A. Thermal Movements: For exterior **fabricated channel dimensional characters**, allow for thermal movements from ambient and surface temperature changes.

1. Temperature Change: **120 deg F (67 deg C), ambient; 180 deg F (100 deg C), material surfaces**.

2.2 DIMENSIONAL CHARACTERS

A. Cast Characters: Characters with uniform faces, sharp corners, and precisely formed lines and profiles, and as follows:
1. Character Material: Cast **aluminum**.
2. Character Height: **As indicated on Drawings**.
3. Finishes:

a. Integral Metal Finish: **As selected by Architect from full range of industry finishes**.

4. Mounting: **Concealed studs**.

2.3 DIMENSIONAL CHARACTER MATERIALS

A. Aluminum, painted or clear finish **As selected by Architect from full range of industry finishes**.

2.4 APPROVED MANUFACTURER/PROVIDER

ADVANCED SIGN SOLUTIONS, 7518 MCELVEY RD, PANAMA CITY BEACH, FL 32408 WWW.ADV-SIGNS.COM, 888.368.9928; 850.914.9925; SUPPORT@ADV-SIGNS.COM

2.5 ACCESSORIES

A. Fasteners and Anchors: Manufacturer's standard as required for secure anchorage of signs, noncorrosive and compatible with each material joined, and complying with the following:

1. Use concealed fasteners and anchors unless indicated to be exposed.
2. For exterior exposure, furnish **stainless steel** devices unless otherwise indicated.
3. Exposed Metal-Fastener Components, General:

a. Fabricated from same basic metal and finish of fastened metal unless otherwise indicated.

4. Sign Mounting Fasteners:

a. Concealed Studs: Concealed (blind), threaded studs welded or brazed to back of sign material, screwed into back of sign assembly, or screwed into tapped lugs cast integrally into back of cast sign material, unless otherwise indicated.

B. Adhesive: As recommended by sign manufacturer.

C. Bituminous Paint: Cold-applied asphalt emulsion complying with ASTM D1187/D1187M.

2.6 FABRICATION

A. General: Provide manufacturer's standard sign assemblies according to requirements indicated.

1. Mill joints to a tight, hairline fit. Form assemblies and joints exposed to weather to resist water penetration and retention.
2. Provide welds and brazes behind finished surfaces without distorting or discoloring exposed side. Clean exposed welded and brazed connections of flux, and dress exposed and contact surfaces.
3. Conceal connections if possible; otherwise, locate connections where they are inconspicuous.
4. Internally brace dimensional characters for stability, to meet structural performance loading without oil-canning or other surface deformation, and for securing fasteners.
5. Provide rabbets, lugs, and tabs necessary to assemble components and to attach to existing work. Drill and tap for required fasteners. Use concealed fasteners where possible; use exposed fasteners that match sign finish.
6. Castings: Fabricate castings free of warp, cracks, blowholes, pits, scale, sand holes, and other defects that impair appearance or strength. Grind, wire brush, sandblast, and buff castings to remove seams, gate marks, casting flash, and other casting marks before finishing.

PART 3 - EXECUTION

3.1 INSTALLATION OF DIMENSIONAL CHARACTERS

A. General: Install signs using mounting methods indicated and according to manufacturer's written instructions.

1. Install signs level, plumb, true to line, and at locations and heights indicated, with sign surfaces free of distortion and other defects in appearance.
2. Before installation, verify that sign surfaces are clean and free of materials or debris that would impair installation.

3. Corrosion Protection: Coat concealed surfaces of exterior aluminum in contact with grout, concrete, masonry, wood, or dissimilar metals, with a heavy coat of bituminous paint.

B. Mounting Methods:

1. Concealed Studs: Using a template, drill holes in substrate aligning with studs on back of sign. Remove loose debris from hole and substrate surface.

a. Masonry Substrates: Fill holes with adhesive. Leave recess space in hole for displaced adhesive. Place sign in position and push until flush to surface, embedding studs in holes. Temporarily support sign in position until adhesive fully sets.
b. Thin or Hollow Surfaces: Place sign in position and flush to surface, install washers and nuts on studs projecting through opposite side of surface, and tighten.

C. Remove temporary protective coverings and strippable films as signs are installed.

END OF SECTION 101419

SECTION 10 14 23 - ROOM IDENTIFICATION PANEL SIGNAGE

PART 1 - GENERAL

1.1 SUMMARY

A. This Section includes the following:
   1. Interior and Exterior Panel signs.
   2. Signage accessories.

1.2 SUBMITTALS

A. Product Data: For each type of product indicated.
B. **Provide signage schedule for acceptance by Architect and Owner. Room names and numbers shall be based requirements established for this campus, matching existing signage. (see approved manufacturer/provider)**
C. Shop Drawings: Show fabrication and installation details for signs.
   1. Show sign mounting heights, locations of supplementary supports to be provided by others, and accessories.
   2. Provide message list, typestyles, graphic elements, including tactile characters and Braille, and layout for each sign.
D. Samples: For each sign type and for each color and texture required.

1.3 QUALITY ASSURANCE

A. Signage shall comply with the requirements of the Florida Accessibility chapter of the Florida Building Code-Buildings and with the requirements of the Authority Having Jurisdiction.
B. Source Limitations: Obtain each sign type through one source from a single manufacturer.
C. Regulatory Requirements: Comply with the Florida Building Code, Americans Disabilities Act (ADA) and with the code provisions as adopted by authorities having jurisdiction.

1.4 PROJECT CONDITIONS

A. Field Measurements: Where sizes of signs are determined by dimensions of surfaces on which they are installed, verify dimensions by field measurement before fabrication and indicate measurements on Shop Drawings.

PART 2 - PRODUCTS

2.1 MATERIALS

A. Acrylic Sheet: ASTM D 4802, Category A-1 (cell-cast sheet), Type UVA (UV absorbing).
B. Aluminum Extrusions: ASTM B 221 (ASTM B 221 M), alloy and temper recommended by aluminum producer and finisher for type of use and finish indicated, and with at least the strength and durability properties of Alloy 6063-T5.

2.2 PANEL SIGNS

A. General: All lettering & symbols shall be raised polymer and integral with panel. Vinyl lettering is not acceptable.
B. Manufacturers: Subject to compliance with requirements, provide products by
   1. Advanced Sign Solutions; www.adv-signs.com; 7518 McElvey Rd, Panama City, FL 32408; 850.914.9925/888.368.9928; support@adv-signs.com

C. Interior Panel Signs: Provide smooth sign panel surfaces constructed to remain flat under installed conditions within a tolerance of plus or minus 1/16 inch (1.5 mm) measured diagonally from corner to corner, complying with the following requirements:
   1. Acrylic Sheet: Minimum 0.080 inch (2.03 mm) thick.
   2. Aluminum Extrusion/Frame with end caps (match existing)
   3. Acrylic insert & paper insert (match existing)
   4. Mounting: by approved manufacturer/installer
      a. Wall mounted with adhesive, two-face tape only used for temporary mounting, while adhesive sets.
      b. Manufacturer's standard anchors for substrates encountered.
   5. Test Type: Match existing; client font and color
   6. Text Size: 5/8-inch to 2-inch high by 1/32 inch thick
   7. Tactile Characters: Characters and Grade 2 Braille raised 1/32 inch (0.8 mm) above surface with contrasting colors.
   8. Location: As indicated on the drawings.
   9. Color: Match existing

D. Tactile and Braille Sign: Manufacturer's standard process for producing text and symbols complying with ADA-ABA Accessibility Guidelines and with ICC/ANSI A117.1. Text shall be accompanied by Grade 2 Braille. Produce precisely formed characters with square-cut edges free from burrs and cut marks; Braille dots with domed or rounded shape.
   1. Panel Material: acrylic lens (match existing)
   2. Raised-Copy Thickness: Not less than 1/32 inch (0.8 mm).

E. Color: Match existing.

2.3 APPROVED MANUFACTURER:

A. Advanced Sign Solutions, www.adv-signs.com; 850.914.9925/888.368.9928; support@adv-signs.com; 7518 McElvey Rd, Panama City Beach, FL 32408

2.4 FABRICATION

A. General: Provide manufacturer's standard signs of configurations indicated.
   1. Match existing

2.5 ACRYLIC SHEET FINISHES
   1. Match existing.

PART 3 - EXECUTION

3.1 INSTALLATION

A. Locate signs and accessories where indicated, in full compliance with Accessibility Code, using mounting methods of types described and complying with manufacturer's written instructions.
   1. Install signs level, plumb, and at heights indicated, with sign surfaces free of distortion and other defects in appearance.
   2. Wall Signs: Install signs on walls adjacent to latch side of door. Where not indicated or possible, such as double doors, install signs on nearest adjacent walls. Locate to allow approach within 3 inches (75 mm) of sign without encountering protruding objects or standing within swing of door.

B. Wall-Mounted Signs: Comply with sign manufacturer's written instructions except where more stringent requirements apply.
   1. Two-face Tape: Mount sign to smooth, nonporous surfaces: Temporary method only. Use silicone – adhesive mounting as recommended per manufacturer.

3.2 CLEANING AND PROTECTION

A. After installation, clean soiled sign surfaces according to manufacturer's written instructions. Protect signs from damage until acceptance by Owner.

END OF SECTION 10 14 00

THIS PAGE LEFT INTENTIONALLY BLANK.

SECTION 10 21 13- PLASTIC TOILET COMPARTMENTS

1.1 SUMMARY

A. Section Includes:

1. Solid-plastic (HDPE) toilet compartments configured as **toilet enclosures and urinal screens**.

B. Related Requirements:

1. Section 055000 "Metal Fabrications" for supports that attach **floor-and-ceiling-anchored compartments** to overhead structural system.
2. **Section 061000 "Rough Carpentry"** for **blocking overhead support of floor-and-ceiling-anchored compartments**.
3. Section 092216 "Non-Structural Metal Framing.
4. Section 102800 "Toilet, Accessories" for accessories mounted on toilet compartments.

1.2 ACTION SUBMITTALS

A. Product Data:

1. Solid-plastic toilet compartments:

B. Shop Drawings: For solid-plastic toilet compartments.

1. Include plans, elevations, sections, details, and attachment details.

C. Samples: For each type of toilet compartment material indicated.

1. Include Samples of hardware and accessories involving material and color selection.

D. Sustainable Design Submittals:
1. Provide LED compliant products

1.3 INFORMATIONAL SUBMITTALS

A. Certificates:

1. Product Certificates: For each type of toilet compartment by manufacturer.

1.4 CLOSEOUT SUBMITTALS

A. Maintenance data.

PART 2 - PRODUCTS

2.1 PERFORMANCE REQUIREMENTS

A. Fire Performance: Tested in accordance with, and pass the acceptance criteria of, NFPA 286.

B. Comply with LEED requirements.

C. Regulatory Requirements: Comply with applicable provisions in the Florida Accessibility Code for toilet compartments designated as accessible.

2.2 SOLID-PLASTIC TOILET COMPARTMENTS

A. Products acceptable for use on this project include:
1. Scranton Products
2. General Partitions

B. Toilet-Enclosure Style: **Overhead braced Floor anchored**.

C. Urinal-Screen Style: **Wall hung**.

D. Door, Panel**, Screen**, and Pilaster Construction: Solid, high-density polyethylene (HDPE) panel material, not less than 1 inch (25 mm) thick, seamless, with eased edges, **no-sightline system,** and with homogenous color and pattern throughout thickness of material.

1. Integral Hinges: Configure doors and pilasters to receive integral hinges.
2. Color and Pattern: **One color and pattern as selected by Architect from manufacturer's full range**.

E. Pilaster **Shoes and Sleeves (Caps)**]: Manufacturer's standard design; **polymer**.

1. Polymer Color and Pattern: **Matching pilaster**.

F. Brackets (Fittings):
1. Full-Height (Continuous) Type: Manufacturer's standard design; **stainless steel**.

2.3 HARDWARE AND ACCESSORIES

A. Hardware and Accessories, Heavy Duty: Manufacturer's heavy-duty operating hardware and accessories.

1. Hinges: Manufacturer's minimum 0.062-inch- (1.59-mm-) thick stainless steel **paired, self-closing type that can be adjusted to hold doors open at any angle up to 90 degrees at accessible stalls, and continuous, cam type that swings to a closed or partially open position** at standard stalls, allowing emergency access by lifting door. Mount with through bolts.

2. Latch and Keeper: Manufacturer's heavy-duty, surface-mounted, cast-stainless steel latch unit, designed to resist damage due to slamming, with combination rubber-faced door strike and keeper, and with provision for emergency access. Provide units that comply with regulatory requirements for accessibility at compartments designated as accessible. Mount with through bolts.
3. Coat Hook: Manufacturer's heavy-duty combination cast-stainless steel hook and rubber-tipped bumper, sized to prevent in-swinging door from hitting compartment-mounted accessories. Mount with through bolts.
4. Door Bumper: Manufacturer's heavy-duty, rubber-tipped, cast-stainless steel bumper at out-swinging doors. Mount with through bolts.
5. Door Pull: Manufacturer's heavy-duty, cast-stainless steel pull at out-swinging doors that complies with regulatory requirements for accessibility. Provide units on both sides of doors at compartments designated as accessible. Mount with through bolts.

2.4 MATERIALS

A. Aluminum Castings: ASTM B26/B26M.

B. Aluminum Extrusions: ASTM B221 (ASTM B221M).

C. Stainless Steel Sheet: ASTM A240/A240M or ASTM A666, Type 304, stretcher-leveled standard of flatness.

D. Stainless Steel Castings: ASTM A743/A743M.

2.5 FABRICATION

A. Fabrication, General: Fabricate toilet compartment components to sizes indicated. Coordinate requirements and provide cutouts for through-partition toilet accessories where required for attachment of toilet accessories.

B. Overhead-Braced Units: Provide manufacturer's standard corrosion-resistant supports, leveling mechanism, and anchors at pilasters to suit floor conditions. Provide shoes at pilasters to conceal supports and leveling mechanism.

C. Door Size and Swings: Unless otherwise indicated, provide 24-inch- (610-mm-) wide, in-swinging doors for standard toilet compartments and 36-inch- (914-mm-) wide, out-swinging doors with a minimum 32-inch- (813-mm-) wide, clear opening for compartments designated as accessible.

PART 3 - EXECUTION

3.1 INSTALLATION OF PLASTIC TOILET COMPARTMENTS

A. General: Comply with manufacturer's written installation instructions. Install units rigid, straight, level, and plumb. Secure units in position with manufacturer's recommended anchoring devices.

1. Maximum Clearances:

a. Pilasters and Panels: 1/2 inch (13 mm).
b. Panels and Walls: 1 inch (25 mm).

2. Full-Height (Continuous) Brackets: Secure panels to walls and to pilasters with full-height brackets.

a. Locate bracket fasteners, so holes for wall anchors occur in masonry or tile joints.
b. Align brackets at pilasters with brackets at walls.

B. Overhead-Braced Units: Secure pilasters to floor and level, plumb, and tighten. Set pilasters with anchors penetrating not less than 1-3/4 inches (44 mm) into structural floor unless otherwise indicated in manufacturer's written instructions. Secure continuous head rail to each pilaster with no fewer than two fasteners. Hang doors to align tops of doors with tops of panels and adjust, so tops of doors are parallel with overhead brace when doors are in closed position.

C. Urinal Screens: Attach with anchoring devices to suit supporting structure. Set units level and plumb, rigid, and secured to resist lateral impact.

3.2 ADJUSTING

A. Hardware Adjustment: Adjust and lubricate hardware according to hardware manufacturer's written instructions for proper operation. Set hinges on in-swinging doors to hold doors open approximately 30 degrees from closed position when unlatched. Set hinges on out-swinging doors to return doors to fully closed position.

END OF SECTION 102113.19

SECTION 10 26 00 - WALL AND DOOR PROTECTION

PART 1 - GENERAL

1.1 SUMMARY

A. Section Includes:
   1. Corner guards.

1.2 ACTION SUBMITTALS

A. Product Data: For each type of product.

B. Sustainable Design Submittals:
   1. Adhesives
   2. Recycled content

C. Shop Drawings: For each type of wall and door protection showing locations and extent.

   1. Include plans, elevations, sections, and attachment details.

   2. Samples: For each exposed product and for each color and texture specified, 12 inches (300 mm) long.

1.3 INFORMATIONAL SUBMITTALS

A. Product certificates.

B. Material certificates.

C. Sample warranty.

1.4 CLOSEOUT SUBMITTALS

A. Maintenance data.

1.5 WARRANTY

A. Special Warranty: Manufacturer agrees to repair or replace components of wall- and door-protection units that fail in materials or workmanship within specified warranty period.

   1. Warranty Period: **five** years from date of Substantial Completion.

PART 2 - PRODUCTS

2.1 PERFORMANCE REQUIREMENTS

A. Surface Burning Characteristics: Comply with ASTM E84 or UL 723; testing by a qualified testing agency. Identify products with appropriate markings of applicable testing agency.

1. Flame-Spread Index: 25 or less.
2. Smoke-Developed Index: 450 or less.

2.2 WALL GUARDS

2.3 CORNER GUARDS

A. Flush-Mounted, Plastic-Cover Corner Guards: Manufacturer's standard assembly consisting of snap-on, resilient plastic cover that is flush with adjacent wall surface, installed over retainer; including mounting hardware; fabricated with 90- or 135-degree turn to match wall condition; full wall height.

1. Manufacturer’s include but are not limited to the following:
   a. Construction Specialties
   b. Nystrom
   c. Pawling Corporation

2. Cover: Extruded rigid plastic, minimum **0.100-inch (2.5-mm)** wall thickness; in dimensions and profiles indicated on Drawings.

   a. Color and Texture: **As selected by Architect from manufacturer's full range**.

3. Continuous Retainer: Minimum 0.060-inch- (1.5-mm-) thick, one-piece, extruded aluminum.

B. Fire-Rated, Flush-Mounted, Plastic-Cover Corner Guards Manufacturer's standard[**, PVC-free**] assembly consisting of snap-on, resilient plastic cover that is flush with adjacent wall surface, installed over continuous retainer and intumescent fire barrier; including mounting hardware; fabricated with 90- or 135-degree turn to match wall condition; full wall height.

1. Manufacturer’s include but are not limited to the following:
   a. Construction Specialties
   b. Nystrom
   c. Pawling Corporation
2. Fire Rating: **Same rating as wall in which corner guard is installed**; UL listed and labeled according to ASTM E1966 or UL 2079.

3. Cover: Extruded rigid plastic, minimum **0.100-inch (2.5-mm)** wall thickness; in dimensions and profiles indicated on Drawings.

a. Color and Texture: **As selected by Architect from manufacturer's full range**.

4. Retainer: Minimum 0.070-inch- (1.8-mm-) thick, one-piece, extruded aluminum.

2.4 MATERIALS

A. Plastic Materials: Chemical- and stain-resistant, high-impact-resistant plastic with integral color throughout; extruded and sheet material as required, thickness as indicated.

B. Polycarbonate Plastic Sheet: ASTM D6098, S-PC01, Class 1 or Class 2, abrasion resistant; with a minimum impact-resistance rating of 15 ft.-lbf/in. (800 J/m) of notch when tested according to ASTM D256, Test Method A.

C. Fasteners: Aluminum, nonmagnetic stainless-steel, or other noncorrosive metal screws, bolts, and other fasteners compatible with items being fastened. Use security-type fasteners where exposed to view.

D. Adhesive: LEED Compliant as recommended by protection product manufacturer.

PART 3 - EXECUTION

3.1 INSTALLATION

A. Installation Quality: Install wall and door protection according to manufacturer's written instructions, level, plumb, and true to line without distortions. Do not use materials with chips, cracks, voids, stains, or other defects that might be visible in the finished Work.

B. Corner Guards shall be one continuous piece. Splicing is not permitted.

C. Mounting Heights: Install wall protection in locations indicated on Drawings.

D. Accessories: Provide mounting hardware, anchors, trim, joint moldings, and other accessories required for a complete installation.

1. Provide anchoring devices and suitable locations to withstand imposed loads.
2. Adjust caps as required to ensure tight seams.

END OF SECTION 102600

THIS PAGE LEFT INTENTIONALLY BLANK

SECTION 10 28 00 - TOILET ACCESSORIES

PART 1 - GENERAL

1.1 SUMMARY

A. This Section includes the following:
   1. Public-use washroom accessories.
   2. Under lavatory guards.
   3. Custodial accessories.

1.2 SUBMITTALS

A. Product Data: For each type of product indicated.
B. Product Schedule:
   1. Identify locations using room designations indicated on Drawings.
   2. Identify products using designations indicated on Drawings.

PART 2 - PRODUCTS

2.1 PUBLIC-USE WASHROOM ACCESSORIES

A. Manufacturers: Subject to compliance with requirements, provide products by one of the following:
   1. Bobrick Washroom Equipment, Inc.
   2. Bradley Corporation.
   3. A & J Washroom Accessories.
B. Refer to the drawings for the accessories noted on the enlarged plans elevations, and schedules

2.2 UNDERLAVATORY GUARDS

A. Manufacturers: Subject to compliance with requirements, provide products by one of the following:
   1. Plumberex Specialty Products, Inc.
   2. TCI Products.
   3. Truebro, Inc.
   4. LavGuard
B. Under-lavatory Guard:
   1. Description: Provide insulating pipe covering for supply and drain piping assemblies, that prevent direct contact with and burns from piping, and allow service access without removing coverings at all exposed under counter lavatories.
   2. Material and Finish: Antimicrobial, molded-plastic, white.

2.3 CUSTODIAL ACCESSORIES

A. Basis-of-Design Product: The design for accessories is based on products indicated. Subject to compliance with requirements, provide the named product or a comparable product by one of the following:
   1. Bobrick Washroom Equipment, Inc.
   2. Bradley Corporation.
   3. A & J Washroom Accessories.

2.4 FABRICATION

A. Keys: Provide universal keys for internal access to accessories for servicing and resupplying. Provide minimum of six keys to Owner's representative.

PART 3 - EXECUTION

3.1 INSTALLATION

A. Install accessories according to manufacturers' written instructions, using fasteners appropriate to substrate indicated and recommended by unit manufacturer. Install units level, plumb, and firmly anchored in locations and at heights indicated.

TOILET ACCESSORY SCHEDULE: Refer to the drawings

Note: MOUNTING HIGHTS FOR TOILET ACCESSORIES SHALL COMPLY WITH THE FLORIDA BUILDING CODE-BUILDING _ACCESSIBILITY CHAPTER.

END OF SECTION 10 28 00

SECTION 104413 - FIRE PROTECTION CABINETS

1.1 SUMMARY

A. Section Includes:

1. Fire-protection cabinets for portable fire extinguishers.

1.2 ACTION SUBMITTALS

A. Product Data: For each type of product.

B. Shop Drawings: For fire-protection cabinets.

C. Samples: For each type of exposed finish required.

1.3 CLOSEOUT SUBMITTALS

A. Maintenance data.

1.4 COORDINATION

A. Coordinate size of fire-protection cabinets to ensure that type and capacity of fire extinguishers indicated are accommodated.

B. Coordinate sizes and locations of fire-protection cabinets with wall depths.

PART 2 - PRODUCTS

2.1 PERFORMANCE REQUIREMENTS

A. Fire-Rated Fire-Protection Cabinets: Listed and labeled to comply with requirements in ASTM E814 for fire-resistance rating of walls where they are installed.

B. Cabinet Type: Suitable for fire extinguisher.

1. JL Industries

2. Larsen’s

C. Cabinet Construction: **Non-rated** and Fire rated. Refer to partition assembly types on the drawings. Furnish fire rated cabinets with ratings appropriate for the assembly rating.

1. Fire-Rated Cabinets: Construct fire-rated cabinets with double walls fabricated from 0.043-inch- (1.09-mm-) thick cold-rolled steel sheet lined with minimum 5/8-inch- (16-mm-) thick fire-barrier material. Provide factory-drilled mounting holes.

D. Cabinet Material: **Aluminum sheet**.

E. Semi-recessed Cabinet: One-piece combination trim and perimeter door frame overlapping surrounding wall surface, with exposed trim face and wall return at outer edge (backbend).
1. Rolled-Edge Trim: **2-1/2-inch (64-mm)** backbend depth.

F. Cabinet Trim Material: **Aluminum sheet**].

G. Door Material: **Aluminum sheet**.

H. Door Style: **Vertical duo panel with frame**].

I. Door Glazing: **Tempered float glass (clear)**.

J. Door Hardware: Manufacturer's standard door-operating hardware of proper type for cabinet type, trim style, and door material and style indicated.

K. Accessories:

1. Mounting Bracket: Manufacturer's standard steel, designed to secure fire extinguisher to fire-protection cabinet, of sizes required for types and capacities of fire extinguishers indicated, with plated or baked-enamel finish.
2. Handle: One-piece, cast-iron door handle with the word "FIRE" embossed into face.
3. Door Lock: **Cam lock that allows door to be opened during emergency by pulling sharply on door handle**.
4. Identification: Lettering complying with authorities having jurisdiction for letter style, size, spacing, and location. Locate **as directed by Architect**.

    a. Identify fire extinguisher in fire-protection cabinet with the words "**FIRE EXTINGUISHER**."

        1) Location: Applied to **cabinet glazing**.
        2) Application Process: **Decals**.
        3) Lettering Color: **Red**.
        4) Orientation: **Vertical**.

5. Aluminum: ASTM B221 (ASTM B221M) for extruded shapes and aluminum sheet, with strength and durability characteristics of not less than Alloy 6063-T5 for aluminum sheet.

    a. Finish: C**lear anodic**.

6. Clear Float Glass: ASTM C1036, Type I, Class 1, Quality q3, [**3**] [**6**] mm thick.
7. Tempered Float Glass: ASTM C1048, Kind FT, Condition A, Type I, Quality q3, 3 mm thick, **Class 1 (clear)**.
8. Tempered Break Glass: ASTM C1048, Kind FT, Condition A, Type I, Quality q3, 1.5 mm thick.

2.2 FABRICATION

A. Fire-Protection Cabinets: Provide manufacturer's standard box (tub) with trim, frame, door, and hardware to suit cabinet type, trim style, and door style indicated.

PART 3 - EXECUTION

3.1 INSTALLATION

A. Prepare recesses for **semirecessed** fire-protection cabinets as required by type and size of cabinet and trim style.

B. Install fire-protection cabinets in locations and at mounting heights indicated.

C. Fire-Protection Cabinets: Fasten cabinets to structure, square and plumb.

D. Identification: Apply **decals** at locations indicated.

E. Adjust fire-protection cabinet doors to operate easily without binding. Verify that integral locking devices operate properly.

END OF SECTION 104413

THIS PAGE LEFT INTENTIONALLY BLANK

SECTION 104416 - FIRE EXTINGUISHERS

PART 1 - GENERAL

1.1 Section includes portable, hand-carried fire extinguishers.

1.2 ACTION SUBMITTALS

A. Product Data: For each type of product..

1.3 COORDINATION

A. Coordinate type and capacity of fire extinguishers with fire-protection cabinets to ensure fit and function.

1.4 WARRANTY

A. Special Warranty: Manufacturer's standard form in which manufacturer agrees to repair or replace fire extinguishers that fail in materials or workmanship within specified warranty period.

B. Warranty Period: One year from date of Substantial Completion.

PART 2 - PRODUCTS

2.1 PERFORMANCE REQUIREMENTS

2.2 NFPA Compliance: Fabricate and label fire extinguishers to comply with NFPA 10, "Portable Fire Extinguishers."

2.3 Fire Extinguishers: Listed and labeled for type, rating, and classification by an independent testing agency acceptable to authorities having jurisdiction.

2.4 PORTABLE, HAND-CARRIED FIRE EXTINGUISHERS

A. Fire Extinguishers: Type, size, and capacity for each fire-protection cabinet indicated.
1. Manufacturers: Subject to compliance with requirements, provide products by one of the following:

a. JL Industries, Inc.; a division of the Activar Construction Products Group. COSMIC 5E
b. Larsens Manufacturing Company. MP5A.

2. Instruction Labels: Include pictorial marking system complying with NFPA 10, Appendix B.

B. Multipurpose Dry-Chemical Type: UL-rated 5 lb. 3A-40BC nominal capacity, with mono ammonium phosphate-based dry chemical in manufacturer's standard enameled container.

PART 3 - EXECUTION

3.1 INSTALLATION

A. Examine fire extinguishers for proper charging and tagging.

B. Remove and replace damaged, defective, or undercharged fire extinguishers.

C. Install fire extinguishers and mounting brackets in locations indicated and in compliance with requirements of authorities having jurisdiction.

1. Mounting Brackets: 54 inches above finished floor to top of fire extinguisher.

D. Mounting Brackets: Fasten mounting brackets to surfaces, square and plumb, at locations indicated.

END OF SECTION 104416

SECTION 107113: EXTERIOR SUN CONTROL DEVICES

PART 1 GENERAL

1.1 RELATED DOCUMENTS

A. Drawings and general provisions of the Contract, including General and Supplementary Conditions and Division 01 Specification Sections, apply to this Section.

1.2 SUMMARY

A. This Section covers Kawneer Aluminum Sunshade Systems, including accessories, mountings, and shims. Sunshades are anchored directly to the vertical curtain wall or storefront mullions.

B. Types of Kawneer Sunshades include:
   1. Versoleil® SunShade Outrigger System compatible with:
      a. 1600 Wall System®1 Curtain Wall System

C. Related Sections:
   1. 072700: Air Barriers
   2. 079200: Joint Sealants
   3. 084113: Aluminum-Framed Entrances and Storefronts
   4. 084313: Aluminum-Framed Storefronts
   5. 084413: Glazed Aluminum Curtain Walls
   6. 085113: Aluminum Windows
   7. 088000: Glazing

1.3 DEFINITIONS

A. For fenestration industry standard terminology and definitions, refer to the Fenestration & Glazing Industry Alliance (FGIA) Glossary (AAMA AG-13).

1.4 PERFORMANCE REQUIREMENTS

A. Structural Performance:
   1. Combined load on sunshade configurations to be determined in accordance with ASCE 7 or applicable code requirements. Combined load consists of wind, snow and ice loads.
   2. Design sunshade configurations to withstand stresses due to combined load. Stresses resulting from thermal expansion/contraction, shall not cause permanent deformation of sunshade assemblies or disengagement from the glazed system.
      a. 1600 Wall System®1 Curtain Wall:
         1) 36" Outrigger: To meet ___ psf with ___ style louver and ___ feet mullion spacing.
         2) 30" Outrigger: To meet ___ psf with ___ style louver and ___ feet mullion spacing.
      b. 1600 Wall System®2 Curtain Wall:

1) 36" Outrigger: To meet ___ psf with ___ style louver and ___ feet mullion spacing.
2) 30" Outrigger: To meet ___ psf with ___ style louver and ___ feet mullion spacing.

c. 1600UT (Ultra Thermal) Wall System®1 Curtain Wall (1" Double Glazed Infill):
1) 36" Outrigger: To meet ___ psf with ___ style louver and ___ feet mullion spacing.
2) 30" Outrigger: To meet ___ psf with ___ style louver and ___ feet mullion spacing.

d. 1600UT (Ultra Thermal) Wall System®1 Curtain Wall (1-3/4" Triple Glazed Infill):
1) 36" Outrigger: To meet ___ psf with ___ style louver and ___ feet mullion spacing.
2) 30" Outrigger: To meet ___ psf with ___ style louver and ___ feet mullion spacing.

e. 1600UT (Ultra Thermal) Wall System®2 Curtain Wall (1" Double Glazed Infill):
1) 36" Outrigger: To meet ___ psf with ___ style louver and ___ feet mullion spacing.
2) 30" Outrigger: To meet ___ psf with ___ style louver and ___ feet mullion spacing.

f. 1600UT (Ultra Thermal) Wall System®2 Curtain Wall (1-3/4" Triple Glazed Infill):
1) 36" Outrigger: To meet ___ psf with ___ style louver and ___ feet mullion spacing.
2) 30" Outrigger: To meet ___ psf with ___ style louver and ___ feet mullion spacing.

g. 1600 Wall System®5 Curtain Wall:
1) 36" Outrigger: To meet ___ psf with ___ style louver and ___ feet mullion spacing.
2) 30" Outrigger: To meet ___ psf with ___ style louver and ___ feet mullion spacing.

h. 1600 SS Curtain Wall System:
1) 36" Outrigger: To meet ___ psf with ___ style louver and ___ feet mullion spacing.
2) 30" Outrigger: To meet ___ psf with ___ style louver and ___ feet mullion spacing.

i. 1600 SS (SSG) Curtain Wall System:
1) 36" Outrigger: To meet ___ psf with ___ style louver and ___ feet mullion spacing.
2) 30" Outrigger: To meet ___ psf with ___ style louver and ___ feet mullion spacing.

j. 1630 SS IR Curtain Wall System:
1) 36" Outrigger: To meet ___ psf with ___ style louver and ___ feet mullion spacing.
2) 30" Outrigger: To meet ___ psf with ___ style louver and ___ feet mullion spacing.

k. Trifab® Versaglaze® 451/451T/451UT (Center Glazed) Framing System:
1) 30" Outrigger: To meet ___ psf with ___ style louver and ___ feet mullion spacing.

l. Trifab® 601/601T/601UT (Center Glazed) Framing System:
1) 30" Outrigger: To meet ___ psf with ___ style louver and ___ feet mullion spacing.

EDITOR NOTE: Please refer to the architectural detail manual for structural charts, and blade styles.

3. The assembled sunshade shall be capable of supporting the specified combined load without damage, permanent deformation, or disengagement from the glazed system mullion.
4. Blade deflection shall not exceed L/120 of span length.
5. Submit test reports verifying compliance with each test requirement required by the project.

B. Shading Performance:

1. Design of standard configurations will allow for negligible direct sunlight to show through the blades based on project location, latitude, altitude, building orientation, surrounding conditions, and aesthetic requirements, except for round, diamond and square louver styles.

C. Thermal Movements: Allow for thermal movements resulting from the following maximum change (range) in ambient and surface temperatures.
1. Temperature Change (Range): 120 deg F (49 deg C), ambient; 180 deg F (82 deg C), material surfaces.

D. Environmental Product Declaration (EPD): Shall have a Type III Product-Specific EPD.

E. Material Ingredient Reporting:

EDITOR NOTE: Include Material Ingredient Reporting if this section is necessary to meet project requirements or for any project that includes Green Building Certifications such as LEED, Living Building Challenge (LBC), and so on.

EDITOR NOTE: Material Ingredient Reporting applies only for anodized products.

1. Shall have a complete list of chemical ingredients to at least 100 ppm (0.01%) that covers 100% of the product.
2. Acceptable documentation includes:
   a. Manufacturer's inventory with Chemical Abstract Service Registration Number (CASRN or CAS#):
      1) Kawneer's Material Transparency Summary (MTS)
   b. Cradle to Cradle certification; either document listed below is acceptable for this option:
      1) Cradle to Cradle Certified™ with Material Health section Silver or higher
      2) Silver Level or higher Material Health Certificate
   c. Red List Free DECLARE label

1.5 SUBMITTALS

A. Product Data:
1. For each type of product indicated, include:
   a. Construction details
   b. Material descriptions
   c. Dimensions of individual components and profiles
   d. Finishes
2. Recycled Content:

EDITOR NOTE: Include these Recycled Content specifications if needed to meet project requirements or for a project that includes Green Building Certifications such as LEED, Living Building Challenge (LBC), etc.

EDITOR NOTE: If Recycled Content requirements are not specified, prime (zero recycled content) aluminum could be supplied.

   a. Provide documentation that aluminum has a minimum of 50% mixed pre- and post-consumer recycled content.

b. Provide a sample document illustrating project-specific information that will be provided after product shipment.

c. After product has shipped, provide project-specific recycled content information:

1) Indicate recycled content, including the percentage of pre- and post-consumer recycled content per unit of product.

2) Indicate the relative dollar value of recycled content product to the total dollar value of product included in the project.

3) Indicate the location for recovery of recycled content.

4) Indicate the location of the manufacturing facility.

3. Environmental Product Declaration (EPD):

a. Include a Type III Product-Specific EPD.

4. Material Ingredient Reporting:

EDITOR NOTE: Include the Material Ingredient Reporting section only for anodized products.

a. Include documentation for material reporting that has a complete list of chemical ingredients to at least 100 ppm (0.01%) that covers 100% of the product.

B. Shop Drawings:

1. Plans
2. Elevations
3. Sections
4. Blade angles
5. Blade spacing
6. Attachments to other compatible systems work

C. Samples for Initial Selection:

1. Provide samples for units with factory-applied color finishes.
2. Provide samples of hardware and accessories involving color selection.

D. Samples for Verification:

1. Provide a verification sample for each type of exposed finish required, in manufacturer's standard sizes.

E. LEED Submittals:

1. Materials and Resources: Provide product information and certification letter indicating percentages by weight of post-consumer and pre-consumer recycled content for products having recycled content.
2. Optimize Energy Performance: Provide information confirming that products contribute to increasing levels of energy performance above the baseline in the prerequisite standard to reduce environmental and economic impacts associated with excessive energy use.
3. Daylighting 75 percent of Spaces: Provide information confirming that products provide the building occupants a connection between indoor spaces and the outdoors through the introduction of daylight and views into the regularly occupied areas of the building.

1.6 QUALITY ASSURANCE

A. Installer Qualifications:
   1. Installer must have successfully installed the same or similar systemsrequired for the project and other projects of similar size and scope.

B. Manufacturer Qualifications:

C. Source Limitations:
   1. Obtain aluminum exterior sunshades and glazed aluminum curtain walls and storefront system through one source from a single manufacturer.

D. Product Options:
   1. Information on drawings and in specifications establishes requirements for aesthetic effects and performance characteristics of assemblies. Aesthetic effects are indicated by dimensions, arrangements, alignment, and profiles of components and assemblies as they relate to sightlines, to one another, and to adjoining construction.
   2. Do not modify intended aesthetic effects, as judged solely by Architect, except with Architect's approval. If modifications are proposed, submit comprehensive explanatory data to Architect for review.

E. Mockups:
   1. Build mockups to verify selections made under sample submittals and to demonstrate aesthetic effects and set quality standards for materials and execution.

F. Pre-installation Conference:
   1. Conduct conference at project site to comply with requirements in Division 01 Project Management and Coordination Section.

1.7 PROJECT CONDITIONS

A. Field Measurements:
   1. Verify actual locations of structural supports for sunshades by field measurements before fabrication.
   2. Indicate measurements on shop drawings.

1.8 WARRANTY

A. Submit manufacturer's standard warranty for owner's acceptance.

B. Warranty Period:
   1. Two years from Date of Substantial Completion of the project provided however that in no event shall the Limited Warranty begin later than six months from date of shipment by manufacturer.

PART 2 PRODUCTS

2.1 MANUFACTURERS

EDITOR NOTE: Retain this article for proprietary method specification; add product attributes, performance characteristics, material standards, and descriptions as applicable. DO NOT USE the phrases "OR EQUAL," "OR APPROVED EQUAL," or similar. Use of such phrases causes ambiguity in the specifications because of the different interpretations among the divergent parties of the construction process and readers of the specifications. Such phrases require extensive and complete requirements (procedural, legal, regulatory, and responsibility) for determining "OR EQUAL."

A. Basis-of-Design Product:
   1. Kawneer Company, Inc.
      a. Versoleil® Sunshade - Outrigger System

   EDITOR NOTE: Retain below for alternate manufacturers/products as specified in the contract documents. Coordinate below with bid document (if any), and division 1 alternates section. Consult with Kawneer Company for recommendations on alternate manufacturers and products meeting the design criteria and project requirements. Kawneer recommends other manufacturers requesting approval to bid their product as an equal must submit their request in writing (10) days prior to close of bidding.

B. Subject to compliance with requirements, provide a comparable product by the following:
   1. Manufacturer: (_____)
   2. Series: (_____)
   3. Profile Dimension: (_____)

C. Substitutions:
   1. Refer to Division 01 Substitutions Section for procedures and submission requirements.
   2. Pre-Contract (Bidding Period) Substitutions:
      a. Submit written requests ten (10) days prior to bid date.
   3. Post-Contract (Construction Period) Substitutions:
      a. Submit written request in order to avoid installation and construction delays.
   4. Product Literature and Drawings:
      a. Submit product literature and drawings modified to suit specific project requirements and job conditions.
   5. Certificates:
      a. Submit certificate(s) certifying that the substitute manufacturer (1) attests to adherence to specification requirements for sunshade performance criteria, and (2) has been engaged in the design, manufacture, and fabrication of sunshades for a period of not less than ten (10) years. (*Company Name*)
   6. Test Reports:
      a. Submit test reports verifying compliance with each test requirement required by the project.
   7. Samples:

a. Provide samples of typical product sections and finish samples in manufacturer's standard sizes.

D. Substitution Acceptance:
1. Acceptance will be in written form, either as an addendum or modification.
2. Acceptance will be documented by a formal change order signed by the owner and contractor.

2.2 MATERIALS

A. Aluminum Extrusions:
1. Alloy and temper recommended by glazed aluminum curtain wall and storefront manufacturer for strength, corrosion resistance, and application of required finish
2. Not less than 0.070" (1.8 mm) wall thickness at any location for the main frame
3. Complying with ASTM B221: 6063-T6 alloy and temper
4. Recycled Content:

EDITOR NOTE: Include these Recycled Content specifications if needed to meet project requirements or for a project that includes Green Building Certifications such as LEED, Living Building Challenge (LBC), etc.

EDITOR NOTE: If Recycled Content requirements are not specified, prime (zero recycled content) aluminum could be supplied.

a. Shall have a minimum of 50% mixed pre- and post-consumer recycled content.
b. Indicate recycled content, including the percentage of pre- and post-consumer recycled content per unit of product.
c. Indicate the relative dollar value of recycled content product to the total dollar value of product included in the project.
d. Indicate the location for recovery of recycled content.
e. Indicate the location of the manufacturing facility.

B. Thermal Barrier:
1. When applied on a thermally broken captured system, sunshade shall be thermally isolated from the interior aluminum mullions by a nominal 0.25" (6.3) thick low conductance material.

C. Aluminum Sheet Alloy:
1. Shall meet the requirements of ASTM B209.

D. Sealant:
1. For sealants required within fabricated sunshade system, provide permanently elastic, non-shrinking, and non-migrating type recommended by sealant manufacturer for joint size and movement.

E. Tolerances:
1. References to tolerances for wall thickness and other cross-sectional dimensions of glazed curtain wall and storefront members are nominal and in compliance with AA Aluminum Standards and Data.

F. Red List Free:

EDITOR NOTE: Red List Free applies only for anodized products.

EDITOR NOTE: Retain the appropriate paragraph below; delete the other paragraph (and its sub-paragraphs, if applicable).

1. All parts and materials comply with the Living Building Challenge/DECLARE Red List and the Cradle-to-Cradle (C2C) Banned List:
   a. PVC-free
   b. Neoprene-free
2. Product does not contain PVC or Neoprene.

2.3 SUNSHADES

A. Sunshade Members:
1. Manufacturer's standard extruded or formed-aluminum framing members of thickness and reinforced as required to support imposed loads.

B. Fasteners and Accessories:
1. Nonmagnetic stainless steel to be non-corrosive and compatible with aluminum members, anchors, and other components.

C. Perimeter Anchors:
1. When steel anchors are used, provide insulation between steel material and aluminum material to prevent galvanic action.

D. Packing, Shipping, Handling, and Unloading:
1. Deliver materials in manufacturer's original, unopened, undamaged containers with identification labels intact.

E. Storage and Protection:
1. Store materials so that they are protected from exposure to harmful weather conditions.
2. Handle material and components to avoid damage.
3. Protect material against damage from elements, construction activities, and other hazards before, during, and after installation.

2.4 ACCESSORY MATERIALS

A. Bituminous Paint:
1. Cold-applied asphalt-mastic paint
2. Complies with SSPC-Paint 12 requirements except containing no asbestos
3. Formulated for 30-mil (0.762 mm) thickness per coat

2.5 FABRICATION

A. Extrude or form aluminum shapes before finishing.

B. Fabricate components that, when assembled, have the following characteristics:
   1. Profiles that are sharp, straight, and free of defects or deformations
   2. Accurately fitted joints that are flush, hairline, and weatherproof
   3. Physical and thermal isolation of glazing from framing members
   4. Accommodations for thermal and mechanical movements of glazing and framing that maintain required glazing edge clearances
   5. Fasteners, anchors, and connection devices that are concealed from view to the greatest extent possible

C. Sunshade:
   1. Fabricate components for assembly using manufacturer's standard installation instructions.

D. After fabrication, clearly mark components to identify their locations in project according to shop drawings.

2.6 ALUMINUM FINISHES

EDITOR NOTE: Select the appropriate finish and color from Kawneer's standard colors listed below. Custom colors are available upon request from Kawneer. Other pigmented organic coatings conforming to AAMA 2603 are available. Consult with your Kawneer representative for other surface treatments and finishes.

A. Finish designations that are prefixed by AA comply with the system established by the Aluminum Association for designating aluminum finishes.

B. Factory Finishing:
   1. Kawneer Permanodic® AA-M10C21A44, AAMA 611, Architectural Class I Color Anodic Coating (Color _____)
   2. Kawneer Permanodic® AA-M10C21A41, AAMA 611, Architectural Class I Clear Anodic Coating (Color #14 Clear) (Optional)
   3. Kawneer Permanodic® AA-M10C21A31, AAMA 611, Architectural Class II Clear Anodic Coating (Color #17 Clear) (Standard)
   4. Kawneer Permafluor™ (70% PVDF), AAMA 2605, Fluoropolymer Coating (Color _____)
   5. Kawneer Permadize® (50% PVDF), AAMA 2604, Fluoropolymer Coating (Color _____)
   6. Kawneer Permacoat™ AAMA 2604, Powder Coating (Color _____)
   7. Other: Manufacturer_____ Type _____ (Color _____)

PART 3 EXECUTION

3.1 EXAMINATION

A. With installer present, examine areas for compliance with requirements for installation tolerances and other conditions affecting performance of the work.

B. Proceed with installation only after correcting unsatisfactory conditions.

3.2 INSTALLATION

A. General:

1. Comply with manufacturer's written instructions. Refer to installation instructions of the compatible curtain wall or storefront system.

   EDITOR NOTE: The installation instructions can differ from one compatible system to another one.

2. Do not install damaged components.
3. Fit joints to produce hairline joints free of burrs and distortion.
4. Rigidly secure non-movement joints.
5. Install anchors with separators and isolators to prevent metal corrosion and electrolytic deterioration and to prevent impeding movement of moving joints.
6. Weld components in concealed locations to minimize distortion or discoloration of finish. Protect glazing surfaces from welding.
7. Seal joints watertight where shown on approved shop drawings and/or manufacturer's standard installation instructions.

B. Metal Protection:

1. Where aluminum will contact dissimilar metals, protect against galvanic action by painting contact surfaces with primer or by applying sealant or tape or installing nonconductive spacers as recommended by manufacturer for this purpose.
2. Where aluminum will contact concrete or masonry, protect against corrosion by painting contact surfaces with bituminous paint.

C. Install components plumb and true in alignment with established lines and grades.

D. Separate aluminum and other corrodible surfaces from sources of corrosion or electrolytic action at points of contact with other materials.

3.3 ADJUSTING, CLEANING, AND PROTECTION

A. Adjusting: Not applicable.

B. Protection:

1. Protect installed product’s finish surfaces from damage during construction.
2. Protect aluminum sunshade system from damage from grinding and polishing compounds, plaster, lime, acid, cement, or other harmful contaminants

C. Cleaning:

1. Repair or replace damaged installed products.
2. Clean installed products in accordance with manufacturer’s instructions prior to owner’s acceptance.
3. Remove and replace glass that has been broken, chipped, cracked, abraded, or damaged during the construction period.
4. Remove construction debris from project site and legally dispose of debris.

END OF SECTION 107113

THIS PAGE INTENTIONALLY LEFT BLANK

SECTION 11 65 00 AUDIO – VISUAL SYSTEMS

PART 1 GENERAL

1. RELATED SECTIONS

(A) The Drawings, General, Special and Supplementary Conditions of the Contract to the Work of this Section.

(B) All project construction documents correspond to this Section.

(C) The Specification Sections of other disciplines correspond to this Section, insofar as contractor coordination and the requirements for interconnection with the work of other contractors are required, and insofar as they apply.

(D) Division 16000 – Electrical Systems

2. SYSTEM DESCRIPTION

(A) Audio Reinforcement System consists of loudspeakers, digital audio processing platform, equipment cabinet, cabling, rigging materials, and wiring.

(B) The Video Reinforcement & distribution system consists of AVoverIP encoders and decoders, touch panels, controllers, OFCI displays, BalanceBox display mounting systems, cabling and connectors.

(C) Integration of any owner furnished equipment (OFE), furnishing and installation of specified products, as well as incidental equipment, hardware and cabling required providing complete and fully functional systems. Furnish, deliver, erect, and connect all the material and equipment described herein and in the drawings, and also all other incidental material and tools, transportation, etc. required to make work complete, in accordance with these plans and specifications, as required to leave the system in first class operating condition, excluding those items designated WORK BY OTHERS (WBO) or NOT IN CONTRACT (NIC).

(D) Verify dimensions and conditions at the job site prior to installation, and perform installation in accordance with these specifications, manufacturers' recommendations and all applicable code requirements.

(E) The AV systems include the following major items:

a) Digital audio & video signal processors, digital control processor and touch panel.
b) Loudspeakers and loudspeaker mounting or support hardware
c) OFCI displays, BalanceBox mounting systems, encoders, decoders, support & hardware
d) Equipment Racks, Cabinetry, and Furniture
e) Cables, Connectors, Plates, and Wiring
f) Preparation of submittal information
g) Installation in accordance with the contract documents, manufacturer's recommendations, and all applicable code requirements
h) Specific control system programming, training & support

i) Initial tests and adjustments, demonstration for approval, final adjustments and documentation
j) Instruction of operating personnel; provision of manuals
k) Maintenance services; warranty

(F) Provision of system testing, system documentation and instruction of Owner Personnel.

(G) Guarantees and Warranties.

3. REFERENCES

In addition to the references in Division 1, all requirements of the latest published edition, unless otherwise noted, including but not limited to the following, shall apply. In the event of conflict between cited or referenced standards, the more stringent shall govern.

a) National Electric Code (N.E.C).
b) Federal Communications Commission (F.C.C.) Rules and Regulations, Part 76.
c) Society of Cable Television Engineers (S.C.T.E.)
d) Society of Motion Picture and Television Engineers (S M P.T.E.)
e) American Society for Testing Materials (A.S.T.M.)
f) National Cable Television Association (N.C. T. A.)
g) Electronic Industries Association (E.I.A)
h) Telecommunications Industries Association (T. I.A.)
i) "Handbook for Riggers", 1977 Revised Edition, Newberry, W. G., Calgary, Alberta Canada.
j) "Basic Principles for Suspended Loudspeaker Systems", Technical Notes Volume 1, Number 14, JBL Professional.
k) Davis, Don and Carolyn, Audio system Engineering, Second Edition, Howard W. Sams and Co., Indianapolis, Indiana, 1986.
l) DOE Standard DOE-STD-1090-99 Hoisting and Rigging

4. SUBMITTALS

(A) Provide shop drawings and record drawings using the following scales:
a) Details – not less than 1/4"=1'-0"
b) Plans – not less than 1/8"=1'-0"

(B) Mark all submittal documents to show the project name, date, Architect, Contractor, Sub-Contractor, and this specification Section number.

(C) Make each specified submittal as a coordinated package complete with all information. Uncoordinated sets will be returned without review.

(D) Cable and Connector Submittal: Submit sample cable with connections and wire labels. Cable sample should be 18" in length. Submit cable/connector assemblies for each type of cable to be used on the project. Manufacturer's cable jacket ID lettering must be included on the sample cable.

(E) Product Data: Submit manufacturer's product data sheets for each item of equipment that will be provided as part of this contract. Provide a complete list of proposed equipment broken down by system. Provide a budget summary page listing price by system. Binders shall be 3-ring binders sized to handle materials plus 34% excess. All cut sheets shall be arranged by system type and then by specification number with tabbed dividers between sections. A table of contents shall appear at the front of the binder.

(F) Submit heat load calculations showing how loads were derived if requested by Owner or Owners Representative.

(G) Custom Software Programming including Graphical User Interface (as required). Provide for approval at least three (3) weeks prior to system commissioning, electronic copies of all custom software. It is the Contractor's responsibility for all custom software programming for the systems they are controlling. Coordination with the Consultant is required for the development of this software.

(H) Provide Panel Fabrication Details including panel engraving schedule to Owner and Consultant prior to ordering panels.

(I) Any technical questions in regards to the proposal/systems shall be submitted in written form to the AV Consultants:

Walthall & Associates, Inc.
200 Swift Creek Drive; Suite G
Cantonment, FL 32533
Electronic mail: chuck@walthall.us
Telephone (850) 478-9002

5. QUALIFICATIONS

(A) Bidder shall be an A/V systems contractor, normally engaged in the full time business of A/V systems installation. Show proof that bidder has been in the communications system installation business for a period of no less than five years and has completed projects of similar size and scope. The Owner and/or Owner's representative reserves the right to reject any bids submitted by firms without sufficient experience in projects of this size, complexity, or any other terms the owner or owner's representative may deem relevant.

(B) No sub-contractor or contract employees will be permitted to perform the contractor's responsibilities as defined herein, unless specifically identified in the bid submission and approved by the Owner and/or Owner's representative. The contractor shall have sole responsibility for the satisfactory execution of the work, even though he may have sub-contracted a portion of the work, or had certain manufacturers install their own products.

(C) The Contractor shall provide resumes of the project coordinator (manager) and lead installer planned to be used for this project. This shall be presented at the presentation of proposal. The Contractor shall maintain the same project manager and lead installer throughout the course entire course of the project. If a personnel change is required the Contractor shall notify the Owner and/or Owner's representative and the General Contractor 30 calendar days prior to the change.

6. QUALITY ASSURANCE

(A) Review architectural, civil, structural, mechanical, electrical, and other project documents relative to this work.

(B) Verify all dimensions on the site.

(C) Coordinate the specified work with all other trades.

(D) Provide all items not indicated on the drawings or mentioned in the specifications that are necessary, required or appropriate for this work to realize complete, stable and safe operation.

(E) Review project documentation and continuously make known any conflicts discovered and provide all items necessary to complete this work to the satisfaction of the Owner and/or Owner's representative without additional expense. In all cases where a device or item or equipment is referred to in singular number or without quantity, each such reference shall apply to as many such devices or items as are required to complete the work.

(F) Provide additional support or positioning members as required for the proper installation and operation of equipment, materials and devices provided as part of this work as approved by the Owner and/or Owner's representative, without additional expense.

(G)Regularly examine all construction, and the work of others, which may affect the work to ensure proper conditions for the equipment and devices before their manufacture, fabrication or installation. Contractor shall be responsible for the proper fitting of the systems, equipment, materials, and devices provided as part of this work.

(H) Promptly notify the Owner and/or Owner's representative of any difficulties that may prevent proper coordination or timely completion of this work. Failure to do so shall constitute acceptance of construction as suitable in all ways to receive this work, except for defects that may develop in the work of others after its execution.

(I) The Systems Contractor shall maintain the same Project Coordinator (Manager) and Field Supervisor throughout the entire project. The Systems Contractor shall provide contact information to the client, AV Consultant, General Contractor and Electrical Contractor, for both parties prior to commencing on-site project work.

(J) Source Limitations: Obtain as many products as possible from a single manufacturer. Obtain each item as a completely newly manufactured unit, including necessary mounting hardware, manuals and accessories.

7. OWNER'S RIGHT TO USE EQUIPMENT

(A) The Owner reserves the right to use equipment, material and services provided as part of this work prior to final acceptance without incurring any obligation to:

a) Accept material and equipment or completed systems until all punch list work is completed and all systems are acceptable.

b) Pay additional cost or charge.

c) Commence the warranty period for any system or device provided as part of the work.

8. PERMITS AND INSPECTIONS

(A) Obtain all required permits and inspections.

(B) Furnish material and workmanship for this work in conformance with all code requirements

(C) Perform all tests required herein, or as may be reasonably required to demonstrate conformance with the specifications.

9. DELIVERY, STORAGE, AND HANDLING

(A) Store equipment and materials safely and securely inside at the job site in a manner that will not interfere with the work of other trades.

(B) Replace all damaged or defective work or material at no additional cost, prior to acceptance.

(C) Check, and if necessary, clean all systems, equipment, devices and components included in the work after acceptance and completion of the work of all other trades.

(D) Store materials in designated areas.

(E) Provide and maintain suitable barriers, guards, fences and signs wherever necessary for the safety of others relative to and/ or for the protection of this work.

(F) Protect all materials and equipment to prevent the entry or adhesion of concrete, plaster, unintended paint, or other damaging debris or materials.

10. SHOP DRAWINGS, PRODUCT DATA AND SAMPLES

(A) Submit shop drawings, product data and samples together in one package within thirty (30) days after award of the Contract and prior to ordering equipment.

(B) Submit catalog data sheets, neatly bound with title page, space for submittal stamps, and tabbed dividers between Sections. Provide a complete list of proposed equipment. Provide a summary of pricing broken down by system. Denote all substitutions.

(C) Submit rack layouts indicating the proposed arrangement of mounted equipment including junction boxes and locations of conduit penetrations.

(D) Submit construction details of all custom fabricated items and approved equipment modifications. Include complete parts lists, schematic diagrams, and all dimensions required for proper assembly.

(E) Submit finish schedule indicating proposed color selections and finishes for custom fabricated items, wall plates and custom labels.

(F) Submit mounting and support details for all items mounted overhead, including loudspeakers complete with parts lists and dimensions. Include a full plan view, front elevation and side elevation of each unique item with corresponding support structure and mounting hardware.

(G) Approval of shop drawings or submittal indicates only the acceptance of the manufacturer and quality. Specific requirements, arrangements, and quantities still must comply with the intent of the contract documents as interpreted by the Owner and/or Owner's representative unless specifically approved in writing.

(H) Submittals, which are incomplete, deviate significantly from the requirements of the Contract Documents, or contain numerous errors, will be returned without review for rework.

11. PROJECT RECORD DRAWINGS (As Built Drawings)

(A) Approved shop drawings, updated to accurately document the final conditions of the system

installation. Legibly mark to record actual construction:

a) Field changes of dimension and detail.

b) Changes made by Revision Order, Directive or other modifications.

c) Details not in original contract drawings.

d) Any other miscellaneous items installed under this contract. At a minimum, the ends of each line should have the type of termination, coordinate and elevation indicated.

e) Layouts of system devices showing actual device locations.

f) Results of all Field Quality Control Tests in this Section.

12. OPERATION MANUALS

(A) Operation manuals shall include, but not limited to the following sections:

a) Table of Contents.

b) Typed description of system including key features and operational concepts (e.g. remote control features, switching functions, and mixing capabilities).

c) Setup diagrams and typed instructions for use in typical situations as directed by the Owner.

d) Small scale plans showing locations and circuit numbers for all system outlets and receptacles.

e) Single-line block diagrams showing all major components of the systems.

f) Manufacturer's operation manuals for user-operated equipment (tape decks, processors, communication equipment, etc.).

13. MAINTENANCE MANUALS

(A) Provide the owner any maintenance manuals that come packaged with equipment.

14. PROJECT CONDITIONS

(A) If project conditions indicate a need to vary from the Specifications or Drawings, notify the Owner and/or Owner's representative, make recommendations, and proceed with the necessary changes only after receipt of approval from the Owner and/or Owner's representative.

(B) All accessories provided by equipment manufacturer shall retain the property of the owner. Collect, inventory and present to owner after Acceptance Testing.

15. WARRANTY

(A) Provide a one (1) year System Warranty, and the following, at no additional cost to the Owner.

(B) Warranty shall contain the following:

a) Date, project title and number.

b) Contractor's name, address, telephone number and point of contact.

c) Title and number of each as-built document.

d) Signature of contractor, or its authorized representative.

e) Include the name of a contact person for service or maintenance and define the limits of the system warranty.

(C) During the System Warranty period, answer all service calls and requests for information within twenty-four (24) hours. Repair or replace faulty items and correct faulty workmanship on site within twenty-four (24) hours of all service calls.

(D) Conduct all warranty repairs and service at the job site unless in violation of manufacturer's warranty. In the latter event, provide substitute systems, equipment, and/or devices, acceptance to the Owner, for the duration of such off site repairs. Transport warranty materials, parts, and personnel to and from the job site at no additional cost.

(E) For products with manufacturer's warranties lasting more than one (1) year, register warranties in the Owner's name.

16. SUBSTITUTIONS

(A) Denote any substitutions for consideration by the Owner or Owner's representative.

18. BRAND NAMES AND ACCEPTABLE ALTERNATIVES

(B) The brand name(s) and model number(s) mentioned are used in this specification as a measure of quality and performance. Any brand or manufacture of acceptable or better quality and performance than that specified will be considered for acceptance by the Owner and/or Owner's representative at time of Bid. However, the Owner and/or Owner's representative reserves the right to reject and deny any substitution that it may, in it's sole discretion, deem unequal, and the findings in this regard shall be accepted by the bidder as final and binding.

19. OWNER FURNISHED EQUIPMENT (O.F.E.)

(A) Certain equipment may be identified as Owner Furnished (OFE or Existing). This Owner Furnished Equipment may presently be part of the Owner's system, or will be provided by the Owner, and will be delivered to the contractor's off-site construction facility, delivered to the contractor's on-site secured storage area, or installed on site by others, as appropriate, for incorporation into the system.

(B) Clean and inspect the OFE, and notify the Owner and/or Owner's representative of damage or defect and the extent of repair and/or adjustment required to bring the OFE to original specification. Service OFE only if directed by the Owner and/or Owner's representative under the arrangements of a separate contract.

(C) Connect, terminate and properly incorporate OFE into the proper system for its type. Reconnect any equipment disconnected for installation of new equipment. Verify proper operation and control functions as before removal.

20. INSURANCE

(A) Insure materials against theft, vandalism, damage due to the elements, fire, etc., to their full value. Materials and the flawless condition of materials shall remain the responsibility of the contractor until acceptance of the system by the Owner.

(B) Contractor shall be responsible for having in force the following insurance protection, this protection shall also be required for any subcontractors the Contractor may hire. Certificates of insurance shall be provided within five (5) calendar days upon request.

a) Workers Compensation Coverage for all workers

b) General, Automobile and Excess or Umbrella Liability Coverage

c) General Liability Coverage – Occurrence Form Required

d) Business Automobile Liability Coverage

21. WORK BY OTHERS (WBO, BY OTHERS) NOT IN CONTRACT (NIC)

(A) As noted on drawings and in project documentation

22. BEST VALUE ITEMIZED PROPOSAL

(A) As noted elsewhere, the AV contractor shall furnish items meeting or exceeding the specifications, items which are new and of the latest technology.

(B) Each item or system group of items shall be individually priced with the understanding **GULF COAST STATE COLLEGE** may select any single or any combination of items as required meeting any budget constraints. Where the contractor chooses, an alternate item or system may be proposed in addition to the items specified.

(C) Award will be based on best value to **GULF COAST STATE COLLEGE**, so proposers are required to attach literature as required, on each individual component proposed and may include with each a narrative explaining the merits of the component.

(D) In addition to above, the AV contractor shall include a narrative at the beginning of his proposal describing the Project Approach, personal experience and overall relative value to **GULF COAST STATE COLLEGE**. This narrative should not exceed two double-spaced typewritten pages and may include any other points the proposer wishes to include.

PART 2 PRODUCTS

1. GENERAL

(A) All equipment, except OFE, and materials shall be new, latest version at time of bid, and shall conform to applicable UL, CSA, or ANSI provisions. Re-manufactured or “B” stock equipment will not be accepted without prior written consent from the Owner and/or Owner’s representative. Evidence of unauthorized re-manufactured, or “B” stock equipment on the project site will be deemed evidence of the contractor’s Failure to Perform the Work. Take care during installation to prevent scratches, dents, chips or disfiguration.

(B) Regardless of the length or completeness of the descriptive paragraph herein, each device shall meet all of its published manufacturer’s specifications. Verify performance as required.

(C) Asbestos Prohibition: No Asbestos containing materials shall be used under this section. The contractor shall insure that all materials incorporated in the project are Asbestos free unless specifically authorized in writing by the Owner and/or Owner’s representative.

(D) All products listed below are listed for sole source information and establishment of the level of quality required by this project. Refer to the project drawings to establish quantities.

(E) Install all rack mounted equipment with black steel 10-32, button head machine screws with plastic cup washers protecting equipment panel. Do not over torque, round out, strip or mar

screws.

(F) Provide and install an escutcheon ring around all pipes, poles and mounts that penetrate the ceiling. Color to be determined by owner.

(G) Some rack-mounted equipment may require shaft locks, covers, or removal of knobs; provide and install during Acceptance Testing

(H) Provide plastic permanent approved labels at the front and rear of all rack-mounted power amplification and signal processing equipment. Mount labels on the equipment rack or equipment chassis, and attach in a neat, plumb, and permanent manner. Embossed labels will not be accepted. Label equipment with schematic enumeration reference, and with descriptive information regarding its function or area it is serving. Similarly, provide permanent approved labels at the rear only of equipment mounted in furniture consoles.

(I) All engraving shall be 1/8" block lettering unless noted otherwise. On dark panels or pushbuttons, letters shall be white. Letters shall be black on stainless steel, brushed natural aluminum plates or light-colored push buttons.

(J) All accessories provided by equipment manufacturer shall retain the property of the owner. Collect, inventory and present to owner after Acceptance Testing.

(K) Per IEC-268 standard, all XLR connectors not mounted on equipment shall be wired pin 2 hot (high), pin 3 (low), and pin 1 screen (shield).

2. AUDIO-VISUAL SYSTEMS MATERIALS

(A) The materials or description of work in this section is typical for all systems in this section and all following specification sections.

(B) All equipment items required to provide a fully functional system may not be noted or depicted on the schematic diagrams. Confirm your quote includes all required equipment documented in the system drawings and any required equipment not listed or shown. Report any missing or required equipment to the Consultant prior to submitting your quote.

(C) Mounting Hardware exposed to the weather shall be aluminum, brass, and epoxy painted galvanized steel, or stainless steel. Apply corrosion inhibitor to all threaded fittings. AV Contractor can sub the control system programming, training and support from a certified programmer/company.

(D) AUDIO-VISUAL SYSTEM

Reference AV drawings for make, model and quantity of AV components. Notify AV Consultant of any discrepancies prior to submitting bids or shop drawings. Failure to notify does not constitute change order (add) approval.

Verify with system drawings, on-site inspection and requirements to provide a fully functional system(s).

Provide all materials, labor, training and miscellaneous equipment required.

Provide all display mounting devices; wall, ceiling, truss, etc. as required.

Provide all industry standard patch bays, fiber trays, patch cords and fiber link cables as required.

Provide all required network, audio, video, POE, POE+ and control cables as required.

Provide BalanceBox display mounting systems for Owner Furnished, AV Contractor installed displays.

Provide all digital system programming and GUI control design.

3. CABLES AND CONTROL WIRING

(A) All electrical conductors installed under this contract, except where otherwise specified, shall be soft drawn annealed stranded copper having a conductivity of not less than 98% of pure copper and shall be Anaconda, Triangle, General or approved equal for power, and Alpha, Belden, or West Penn for low voltage. Cables in plenum rated ceilings outside conduit shall be similar to those listed above, except plenum rated.

(B) Homerun ALL Loudspeaker Cables, Reinforcement Loudspeaker Cables, Monitor and Foldback Loudspeaker Cables. Cables between loudspeakers interconnect junction boxes and racks to be at least No. 12 AWG jacketed pair equal to West Penn CL3 rated product or as shown on the AV drawings.

(C) Other Loudspeaker Cables to be at least No. 16 AWG jacketed pair equal to West Penn CL3 rated product or as shown on the AV drawings.

(D) Line Level and Microphone Level Cables to be at least No. 22 AWG shielded jacketed pair equal to West Penn CL3-452 or CL3-291 or as shown on the AV drawings.Multi-conductor High Resolution Video Cable shall be manufactured by Extron Electronics or West Penn CDT.

(E) Coaxial Cable for video and RF transport shall be RG-6 quad-shielded with a solid copper center conductor. Any other cable if installed shall be removed and replaced with approved cable at no additional expense to the owner.

(F) Low Voltage Control Cabling to be at least No.18AWG shielded CL3 rated cable, conductor count to be determined by application.

(G) All cables that are not in conduit and are run through plenum rated spaces shall be plenum rated cable of the gauge and conductor count required for the application.

4. ADD OPTIONS

(A) Provide pricing on the following add option for purchasing consideration by the Owner. Ensure pricing includes all necessary components, parts and labor to provide a fully functional system.

5. DELETE OPTIONS

(A) Provide pricing on the following delete options for purchasing consideration by the Owner. Ensure pricing includes all necessary components, parts and labor to provide a fully functional system.

a) DELETE OPTIONS are at Owner's discretion upon receipt of proposal.

6. FABRICATION

(A) Equipment Racks

a) Pre-assemble and test all racks before delivery to the job site, provide a written report on pre-assembly and test results to Owner/Owner's Representative.

b) Verify the depth of each rack prior to assembly to ensure that mounted equipment will fit

completely inside with the front and rear door closed.

7. SOURCE QUALITY CONTROL TESTS

(A) Use the following test equipment meeting the following minimum specifications to perform the Source Quality Control Tests and Field Quality Control Tests. Furnish the same test equipment for the performance of Acceptance Testing.

a) Digital Multimeter

DC to 20 kHz bandwidth
300 V range, 100 mV resolution
10 megohms input impedance
Direct reading of dBm across 600-ohm load
DC resistance to .1 ohm
Dual Trace Oscilloscope *(if required or requested)*
100 MHz bandwidth
1 mV/CM sensitivity
Dual time base capability

b) Sine/Square Wave Generator

5 Hz to 5 kHz bandwidth
Output level of 0 dBm with less than .5% THD

c) Impedance Bridge

Range: 1 ohm to 1 megohm
Three test frequencies, minimum, ranging from 250 Hz to 4 kHz

d) Sound Level Meter

ANSI Type 2 with one-octave filter set

(B) Measurements

a) Measure and record impedances curves for each loudspeaker line entering rack at 1000 Hz.

b) Grounding System tests as described in the Technical Systems Specification.

8. MISCELLANEOUS CONNECTORS

(A) Certain connectors not identified in specific paragraphs, or indicated on the drawings, are specified by generic “type”. At all times, match connector types used in adjacent project areas, including existing audio, television and audiovisual systems.

PART 3 EXECUTION

1. INSTALLATION

(A) Verify existing conditions before starting work.

(B) Execute all work in accordance with Part 1.3 References in this guideline, and with all local and state codes, ordinances, and regulations.

(C) Install equipment according to manufacturer's recommendations.

(D) Install all rack-mounted equipment with black steel 10-32, button head machine screws, using plastic cup washers to protect equipment panel.

(E) Rack mounted equipment shall be mounted into racks and fully wired and tested, before delivery to job site. *(Does not apply when racks are existing)*

(F) Install flat black blank panels in all unused rack positions. Use no larger then a two space panel.

(G) Ensure that levels and impedances are properly matched between components.

(H) Choose colors and finishes of all exposed and custom fabricated items and labels to blend in with the surroundings as approved by the Owner and/or Owner's representative.

(I) Firmly and permanently attach electrical boxes, enclosures and permanent equipment to the building. Rigidly mounted equipment and devices shall be level, plumb and square.

a) Set "flush-mounted" units so that the face of the cover, bezel, or escutcheon is in the same plane as the surrounding finished surface.

b) Mount boxes, panels and trim so that there are no gaps, cracks, or obvious lines between the trim and the adjacent finished surface, and ready them to receive final finish, as applicable.

c) Provide access panels where needed to access boxes, panels and enclosures in walls or ceilings, as indicated and dimensioned on the shop drawings.

d) Finish panels to match the surrounding surfaces.

(J) Supports and mounts for equipment to be installed over public areas shall be permanently attached to suitable building structure adequate to support the equipment loads with a safety factor of at least five.

(K) Use attachment hardware with a minimum SAE Grade 5 load rating. Do not use formed eye-bolts or lag screws for support or connection of suspended equipment.

(L) Verify capacity of mounting methods used in the work and associated liabilities. All attachments, attachment points, reinforcement requirements, and hardware selection shall be executed in accordance with the references in PART 1.

2. GROUNDING, SHIELDING AND ISOLATING

(A) Mount and enclose all electrical and electronic equipment in metal enclosures, pedestals or equipment racks.

(B) All junction boxes shall be bonded to the building safety ground.

(C) Use EMT type conduit for all wiring outside of equipment racks except plenum rated wiring above a lay-in ceiling, and outdoor conduits and raceways, where separate insulated ground wiring shall be supplied.

(D) Use flexible conduits and PVC fittings to provide insulated connections of the building electrical raceways to equipment racks. Mount all equipment racks at the job site in a manner that provides electrical isolation from the building structure and electrical raceways.

(E) Electronics racks and cabinets shall be boned to the isolated ground technical power system only. Refer to Section 16770 for coordination and test with the Electrical Contractor.

(F) In the case where a metal equipment cabinet or rack is located on a suspended, concrete or bonded flooring system, the enclosure shall be placed on a Santoprene isolating mat with a minimum thickness of 3/32" and a Durometer of 80A,.

3. WIRING PRACTICES

(A) Where specific instructions are not given, perform all wiring in strict adherence to standard broadcast and sound engineering practices in accordance with the references listed in PART 1.

(B) Group all wiring into the following classifications by power level or signal type:

a) Microphone Level: less than -20 dBm.

b) Line Level Audio and DC Control Circuits: -20 dBm to +30 dBm.

c) Speaker Level: greater than +30 dBm.

d) AC Mains Power Circuits

(C) Separate wiring of differing classifications by at least six (6) inches, wherever possible. Wherever lines of differing classification must come closer together than six (6) inches, cross them perpendicular to each other.

(D) Neatly harness wires together within racks by power level classification using horizontal and vertical wiring supports as required. Rigidly support all wires within 6" of fixed connection points. Leave service loops of sufficient lengths to allow rack hinges or slides to fully extend to facilitate access to rear panel connectors from the front of each rack. Do not use self-adhesive anchor pads for support of cables.

(E) Observe consistent polarity throughout the audio systems as follows:

a) Use only balanced differential inputs throughout all audio systems unless otherwise noted.

b) Use approved transformers where directed to reduce objectionable system noise to acceptable levels.

(F) Exercise care in wiring to avoid damaging the cables and equipment. Use grommets around cutouts and knockouts where conduit or chase nipples are not installed. Use bushings where conduit terminal connections are exposed in or out of junction boxes.

(G) Cut off unused wire ends approximately one-half inch (1/2") past the wire jacket. Fold them back over the jacket, and secure in place with heat-shrink tubing. In multi-conductor cables, preserve all unused conductors for future use. Failure to do so may result in replacement of cables at the contractor's expense.

(H) Provide a minimum 6" service loop or enough cable to allow for three (3) subsequent terminations which ever is greater.

(I) All cable jacket exposed stripped ends shall be dressed with the appropriate sized heat shrink.

(J) All drain cables shall be protected from the jacket strip to the point of termination. Exposed bare wire is not acceptable.

(K) Make all connections using rosin-core solder in conjunction with approved mechanical connectors unless other is specified by manufacturer. Connect microphone, control, and line level wiring through approved connectors. Connect speaker level wiring using approved terminal barrier strips. Mount all terminal devices on a non-conductive (electrically) rigid surface. Provide 10% spare terminals at each location. Label each terminal with a unique number.

(L) Make all power amplifier output connections directly into amplifier binding posts, friction fit connectors are not acceptable. In the event the amplifier doesn't have binding posts, and has barrier strip connections, crimp and solder the appropriate fork lug to the cable and torque screws to manufacturer's specification.

(M) All fiber optic cable splicing shall utilize the fusion splice method. The maximum allowable loss per fusion splice shall be 0.5 dB.

4. LABELING

(A) Label products in a logical, legible, and permanent manner corresponding to the Drawings. Wording, format, style, color, and arrangement of text will be subject to the Owner and/or Owner's representative's approval. Submit samples and labeling schedule for approval. Labeling will be verified at final adjustment and equalization

(B) Label all wall plates for input, output, and control receptacles as well as connector mounting plates in all boxes using 1/8" engraved lettering filled with black or contrasting paint, as approved.

(C) Use engraved plastic labels similar to Lamicoid, squarely and permanently attached, to label the following:

a) Patch panel designation strips.

b) Front and back of all rack mounted equipment including controls

c) Barrier strips, terminals, transformers, switches, relays, volume controls, and similar devices.

(D) Label pushbutton switches with engraved lettering filled with contrasting color paint.

(E) Label all permanently installed wires on both ends with approved permanent clip-on type or sleeve type markers. Wrap-around adhesive labels will not be accepted unless completely covered with clear heat shrink tubing.

(F) Label all portable equipment with engraved block letters using initials and/or words. Label all portable cables similarly with printed heat-shrinkable tags located 12 inches from the male connector end. Verify lettering through the Owner and/or Owner's representative prior to engraving or printing.

(G) Label access panels and backboards with designations corresponding to the drawings. Where devices are concealed above access ceilings, provide permanent lamicoid labels, on the ceiling supports corresponding to the drawings in finishes and sizes approved by the Owner and/or Owner's representative.

5. FIELD QUALITY CONTROL TESTS

(A) Maintain a competent supervisor and supporting technical personnel, acceptable to the Owner and/or Owner's representative during the entire installation.

(B) Before connecting any equipment to AC power outlets, measure the AC voltages between hot, neutral, and ground and verify correct voltage and polarity of AC power. Equipment damaged by connecting to improperly wired outlets shall be replaced at no addition cost to the Owner.

(C) Upon completion of the system installation, it shall be the responsibility of the contractor to perform the necessary adjustments and balancing of all signals and amplifier gain, and other level controls to ensure proper system operation. The Owner shall physically inspect the system and/or Owner's representative to assure that all equipment is installed in a neat and workmanlike manner as called for by the plans and specifications.

(D) Determine the proper sequence of energizing systems to minimize the risk of damage.

(E) After successfully energizing the systems, make all preliminary adjustments and document the setting of all controls, parameters of all corrective networks, voltages at key system interconnection points, gains and losses, as applicable.

(F) Verify the performance parameters of the individual systems following established professional procedures, in addition to those specified herein.

(G) Measure and record impedance curves of all loudspeaker lines at amplifier rack terminal barrier strips prior to connecting to amplifier outputs.

(H) Apply a sine-wave sweep signal to each loudspeaker system, sweeping from 50 Hz to 5000 Hz at a sound pressure level which is 10 dB below the loudspeaker's rated electrical input power. Listen for rattles or objectionable noise and correct if apparent.

(I) Using a +4 dBm sine-wave input, set controls of each component to produce a +4 dBm sine-wave output. Under these conditions (unity gain), the presence of any waveform, distortion, interference signals, or oscillations shall be unacceptable.

(J) Check for proper polarity of ceiling mounted loudspeakers by applying music program or pink noise to each system and walking through the transition areas of coverage from one loudspeaker to the next. Transition should be smooth with no apparent shifting of source from one loudspeaker to the next.

(K) Drive each ceiling distributed loudspeaker system with one octave of pink noise centered at 1000 Hz at a sound pressure level which is at least 10 dB above the ambient noise. Adjust power amplifiers to provide uniform distribution of sound throughout the seating areas within a tolerance of ±3 dB. Use an ANSI Type 2 sound level meter set for slow meter damping to take readings at seated ear height.

(L) Individually drive each reinforcement loudspeaker with one octave of pink noise centered at 1000 Hz at a sound pressure level, which is at least 10 dB above the ambient noise. Adjust power amplifiers to provide an equal sound pressure level from each loudspeaker on its aiming axis in the seating area. Use an ANSI Type 2 sound level meter set for slow meter damping to take readings at seated ear height.

(M) Upon completion of initial tests and adjustments, notify the Owner and/or Owner's representative the system is ready for final equalization and acceptance testing.

6. TEST EQUIPMENT

(A) Provide the following test equipment on site during construction and available to the Owner and/or Owner's representative during final adjustment and acceptance testing:

a) Digital Multi-meter

b) 100 MHz Dual Trace Storage Oscilloscope

c) Video Test Pattern Generator *(4k, XGA, Component, YC and Composite)*

d) Sine/Square Wave Generator

e) Impedance Bridge

f) Sound Level Meter - ANSI Type 2 with one-octave filter set

7. FINAL ADJUSTMENT AND EQUALIZATION

(A) Schedule a time for the Owner and/or Owner's representative to perform the Final Adjustment and Equalization. Notify the Owner and/or Owner's representative and Consultant at least

twenty one (21) days in advance.

(B) Furnish project lead installer to assist the Owner and/or Owner's representative during the Final Adjustment and Equalization.

(C) Audio Systems acceptance tests shall employ an approved sound level meter, and spectrum analyzer and digital multi-meter to be provided by the contractor. Measurements shall be made at the combined output of the amplifiers and at selected locations throughout the facility.

(D) Video Systems acceptance tests shall employ and approved video test pattern generator, PC with min. 4k output and a 100MHz dual trace storage oscilloscope. Measurements shall be made at the point of signal origination and compared to signal at the display device. Minimum requirements at the display device shall be a rise time no greater then 7.5ns (5ns preferred) and amplitude of .7 volts.

(E) Record final settings on all equipment and submit with contract closeout documents.

8. CLEAN UP

(A) Remove all unnecessary tools and equipment, unused materials, packing materials, and debris from each area where Work has been completed on a daily basis unless designated for storage.

(B) Clean all areas around system equipment and be sure that the inside of each equipment rack is free of cut wire ends, solder splatters, and other debris.

9. DEMONSTRATIONS AND TRAINING

(A) Furnish a technician who is qualified to operate and maintain the systems specified in this Section to conduct (2) two (2) two hour training sessions (schedule with Owner) to the Owner designated personnel (users) regarding the design features and proper operation of the systems.

(B) Furnish the same technician/instructor during the first formal use of the system to further instruct and assist Owner personnel in system operation.

(C) Upon completion of the Work, the Owner and/or Owner's representative may elect to verify test data as part of the acceptance procedure. Provide personnel and equipment, at the convenience of the Owner and/or Owner's representative, to reasonably demonstrate system performance and to assist with such tests without additional cost to the Owner and/or Owner's representative.

10. FINAL PROCEDURES

(A) Perform any and all remedial work to correct inadequate performance or unacceptable conditions of, or relating to any of this work, as determined by the Owner and/or Owner's representative, at no additional expense to the Owner and/or Owner's representative.

(B) Furnish all portable and loose equipment to the Owner along with complete documentation of the materials presented. All portable equipment shall be presented in the original manufacturers packing, complete with all included instructions and miscellaneous manuals and documents.

(C) Test Reports and Certificates:

a) Document all acceptance testing, calibration and correction procedures described herein with the following information:

b) Parameters measured and their values, including values measured prior to calibration or

correction, as applicable.

c) Parameters associated with calibration or corrective networks, components, or devices.

d) All software shall have certified backups and escrow provisions reviewed with the Owner and/or Owner's representative and equipment supplier.

e) Provide all operational software, configuration files, source code, and final settings and adjustment, in Compact Disc format, sleeved in the final documentation binder. The configurations, and source code become the sole property of the owner at project completion

f) A list of all equipment, indicating manufacturer, model number, serial number and equipment location (rack/room number). Update following acceptance testing if modified.

(D) Present, review and clarify all materials to the Owner and/or Owner's representative and/or operating personnel and fully demonstrate the operation and maintenance of the systems, equipment, and devices specified herein.

(E) Check, inspect, and if necessary, adjust all systems, equipment, devices and components specified, at the Owner's convenience, approximately thirty (30) days after the Owner acceptance of this work.

END OF SECTION 11 065

THIS PAGE INTENTIONALLY LEFT BLANK

SECTION 12 36 61 - SOLID SURFACING COUNTERTOPS

PART 1 - GENERAL

1.1 RELATED DOCUMENTS

A. Drawings and general provisions of the Contract, including General and Supplementary Conditions and Division 01 Specification Sections, apply to this Section.

1.2 SUMMARY

A. Section Includes:

1. Solid surface material countertops.
2. Solid surface vanities.
3. Solid surface material backsplashes.
4. Solid surface material end splashes.
5. Solid surface material apron fronts.
6. Solid surface material sinks.
7. Solid surface window sills.
8. Solid surface adhesives and sealants.

B. Related Requirements:

1.3 ACTION SUBMITTALS

A. Product Data: For countertop, wall, and **sill** materials including manufacturer's technical data sheets, and published written instructions.

B. Sustainable Design Submittals:

1. Product Data: For adhesives and sealants, indicating VOC content.
2. Laboratory Test Reports: For adhesives and sealants, indicating compliance with requirements for low-emitting materials.

C. Shop Drawings: For countertops. Show materials, finishes, edge and backsplash profiles, methods of joining, terminations, and cutouts.

1. Show locations and details of joints.
2. Show direction of directional pattern, if any.

D. Samples for Initial Selection: For each type of material exposed to view. See finish schedule on the drawings.

E. Samples for Verification: For the following products:

1. Countertop material, 6 inches (150 mm) square.
2. Countertop, with front edge **and backsplash**, 8 by 10 inches (200 by 250 mm), of construction and in configuration specified.

F. Certificates: For the following certifications:

1. United States Food and Drug Administration (FDA) compliance for food contact materials described in 21 CFR 174 to 21 CFR 190.
2. New York City material equipment acceptance, MEA 181-96-M.
3. ANSI/NSF 51 "food zone" and FDA "direct-food contact" compliant.
4. UL GREENGUARD® Gold Certified product for low-chemical emissions.

1.4 INFORMATIONAL SUBMITTALS

A. Qualification Data: For manufacturer and fabricator.

1.5 CLOSEOUT SUBMITTALS

A. Maintenance Data: For solid surface material countertops to include in maintenance manuals. Include Product Data for care products used or recommended by Installer and names, addresses, and telephone numbers of local sources for products.

1.6 QUALITY ASSURANCE

A. Manufacturer Qualifications: ISO 9001 quality management system certification for manufacturing facility(ies).

B. Fabricator Qualifications: Shop that employs skilled workers who custom-fabricate countertops similar to that required for this Project, and whose products have a record of successful in-service performance.

1. Manufacturer-certified fabricator.

C. Installer Qualifications: Manufacturer certified fabricator of countertops.

D. Mockups: Build mockups to demonstrate aesthetic effects and to set quality standards for fabrication and installation.

1. Build mockup of typical countertop as **indicated by Architect**.
2. Subject to compliance with requirements, approved mockups may become part of the completed Work if undisturbed at time of Substantial Completion.

1.7 FIELD CONDITIONS

A. Field Measurements: Verify dimensions of countertops by field measurements **after base cabinets are installed but** before countertop fabrication is complete.

1.8 COORDINATION

A. Coordinate locations of utilities that will penetrate countertops or backsplashes.

1.9 WARRANTY

A. Manufacturer's Warranty: Manufacturer and installer agree to repair or replace sheet material not free from defects in materials, fabrication, or workmanship within specified warranty period.

1. Warranty Period: 10 years from date of Substantial Completion.

PART 2 - PRODUCTS

2.1 SOLID SURFACE COUNTERTOP AND WALL MATERIALS

A. Composition Solid-Surface Material: Homogeneous-filled plastic resin complying with ICPA SS-1.

1. Basis-of-Design Product: Subject to compliance with requirements, provide Wilsonart LLC; or a comparable product by one of the following:

    a. Affinity Surfaces; a brand of Domain Industries, Inc.
    b. Avonite Surfaces.
    c. E. I. du Pont de Nemours and Company.
    d. Formica Corporation.
    e. LG Chemical, Ltd.
    f. Meganite Inc.

2. Thickness: As indicated by product specified on the drawings..
3. Panel Weight: As indicated by product specified on the drawings..
4. Surface-Burning Characteristics: Comply with ASTM E 84; testing by a qualified testing agency. Identify products with appropriate markings of applicable testing agency.

    a. Flame-Spread Index: **25** or less.
    b. Smoke-Developed Index: **450** or less.

5. Colors and Patterns: **As specified on the drawings.**

2.2 COUNTERTOP FABRICATION

A. Fabricate countertops according to solid surface material manufacturer's written instructions and to the AWI/AWMAC/WI's "Architectural Woodwork Standards."

1. Grade: **Premium**

B. Countertops: 1/2-inch (12.7-mm) thick, solid surface material with front edge built up with same material.

C. Backsplashes: **3/4-inch (19-mm)** thick, solid surface material.

D. Fabricate tops with shop-applied edges **and backsplashes** unless otherwise indicated. Comply with solid surface material manufacturer's written instructions for adhesives, sealers, fabrication, and finishing.

E. Joints: Fabricate countertops without joints.

F. Cutouts and Holes:

1. Undercounter Plumbing Fixtures: Make cutouts for fixtures **in shop** using template or pattern furnished by fixture manufacturer. Form cutouts to smooth, even curves.

    a. Provide vertical edges, slightly eased at juncture of cutout edges with top and bottom surfaces of countertop.

2. Counter-Mounted Plumbing Fixtures: Prepare countertops in shop for field cutting openings for counter-mounted fixtures. Mark tops for cutouts and drill holes at corners of cutout locations. Make corner holes of largest radius practical.
3. Fittings: Drill countertops in shop for plumbing fittings, undercounter soap dispensers, and similar items.
4. Counter-Mounted Cooktops: Prepare countertops in shop for field cutting openings for cooktops. Mark tops for cutouts and drill holes at corners of cutout locations. Make corner holes of largest radius practical.

2.3 INSTALLATION MATERIALS

A. Adhesive: Product recommended by solid surface material manufacturer.

1. Adhesives shall have a VOC content of **70**g/L or less.
2. Adhesive shall comply with the testing and product requirements of the California Department of Public Health's "Standard Method for the Testing and Evaluation of Volatile Organic Chemical Emissions from Indoor Sources Using Environmental Chambers."

B. Sealant for Countertops: Comply with applicable requirements in Section 079200 "Joint Sealants."

PART 3 - EXECUTION

3.1 EXAMINATION

A. Examine substrates to receive solid surface material countertops and conditions under which countertops will be installed, with Installer present, for compliance with requirements for installation tolerances and other conditions affecting performance of countertops.

B. Proceed with installation only after unsatisfactory conditions have been corrected.

3.2 INSTALLATION

A. Install countertops level to a tolerance of 1/8 inch in 8 feet (3 mm in 2.4 m), 1/4 inch (6 mm) maximum. Do not exceed 1/64-inch (0.4-mm) difference between planes of adjacent units.

B. Fasten countertops by adhering with 100-percent silicone material in dab format (not bead format) to base units into underside of countertop at 18 to 24 inches (457 to 610 mm) o.c. Align adjacent surfaces and, using adhesive in color to match countertop, form seams to comply with manufacturer's written instructions. Carefully dress joints smooth, remove surface scratches, and clean entire surface.

C. Fasten countertops by adhering with 100-percent silicone material in dab format (not bead format) to base units into underside of countertop at 18 to 24 inches (457 to 610 mm) o.c. Shim as needed to align subtops in a level plane.

D. Secure countertops to subtops or wood-web frame with adhesive according to solid surface material manufacturer's written instructions. Align adjacent surfaces and, using adhesive in color to match countertop, form seams to comply with manufacturer's written instructions. Carefully dress joints smooth, remove surface scratches, and clean entire surface.

E. Complete cutouts not finished in shop. Mask areas of countertops adjacent to cutouts to prevent damage while cutting. Make cutouts to accurately fit items to be installed, and at right angles to finished surfaces unless beveling is required for clearance. Ease edges slightly to prevent snipping.

F. Apply sealant to gaps at walls; comply with Section 079200 "Joint Sealants."

END OF SECTION 123661.16

THIS PAGE INTENTIONALLY LEFT BLANK

SECTION 142100 ELECTRIC TRACTION ELEVATORS

PART 1: GENERAL

1.1 SUMMARY

A. Section Includes: Electric Traction Elevators.

B. Products Supplied but Not Installed Under this Section:

1. Hoist Beam
2. Pit Ladder
3. Inserts mounted in block walls for rail attachments

C. Work Supplied Under Other Sections:

1. Temporary lighting, including temporary lighting in hoistway for machine space with switch located in hoistway on the strike jamb side of top landing door.
2. Main line disconnects for each elevator.
   a. One fused three phase permanent power in building electrical distribution room
3. Hoistway ventilation shall be in accordance with local and national building code requirements.
4. Guide Rail Support shall be structurally adequate to extend from pit floor to top of hoistway, with spans in accordance with requirements of authority having jurisdiction and final layouts.
5. Removable barricades at all hoistway openings, in compliance with OSHA 29 CFR 1926.502 in addition to any local code requirements.
6. Lifeline attachments capable of withstanding 5000 lb load in accordance with OSHA 29 CFR 1926.502. Provide a minimum of 2 at the top, front of each hoistway.
7. Pit lighting: Fixture with switch and guards. Provide illumination level equal to or greater than that required by ASME A17.1/CSA B44 2000, or applicable version.
8. Control space lighting with switch. Coordinate switch with lighting for machine space as allowable by code.
9. Access Doors: As required for access to governor and/or seismic switch. Access door shall be self-closing, self-locking if necessary and operable from the inside without a key.

D. Related sections:

1. Section 015000 – Temporary Facility and Controls
2. Section 033000 - Cast-in-Place Concrete:
3. Section 042000 - Unit Masonry

4. Section 055000 - Metal Fabrications
5. Section 071600 - Cementitious Waterproofing
6. Section 230000 - Heating, Ventilating, and Air Conditioning
7. Section 260000 - Electrical
8. Section 263000 - Electric Power Generating and Storing Equipment
9. Section 273000 - Voice Communications
10. Section 283100 - Fire Detection and Alarm
11. Section 310000 – Earthwork

E. Industry and government standards:

1. ICC/ANSI A117.1 Accessible and Usable Buildings and Facilities
2. ADAAG - Accessibility Guidelines for Buildings and Facilities
3. ANSI/NFPA 70, National Electrical Code
4. ANSI/NFPA 80, Standard for Fire Doors and Fire Windows
5. ASME/ANSI A17.1, Safety Code for Elevators and Escalators.

1.2 DESCRIPTION OF ELEVATOR

A. Elevator Equipment: KONE Machine Room-Less gearless traction elevator

B. Equipment Control: KCM831

C. Drive: Regenerative

D. Quantity of Elevators: 1 Elevator

E. Landings: 2

F. Openings: 2 Front Openings, 0 Back Openings

G. Travel: 16’ 0”

H. Rated Capacity: 5,000 lb

I. Rated Speed: 150 FPM

J. Clear Inside Dimensions: (W x D) 5' 7 3/16" x 8' 9 11/16"

K. Cab Height: 8'

L. Clear height under suspended ceiling: 7'-6"

M. Entrance Width and Type: 54" and Left Opening

N. Entrance Height: 7'-0"

O. Main Power Supply: 208 V Volts + 5%, three-phase

P. Operation: Simplex

Q. Machine Location: Inside the hoistway mounted on car guide rail

R. Control Space Location: Integrated control

S. Elevator Equipment shall conform to the requirements of seismic zone: Non-Seismic

T. Maintenance Service Period: 12 Months

1.3 PERFORMANCE REQUIREMENTS

A. Car Performance

1. Car Speed ± 5% of contract speed under any loading condition or direction of travel.

2. Car Capacity: Safely lower, stop and hold (per code) up to 125% of rated load.

B. System Performance

1. Vertical Vibration (maximum): 15 mg ISO187338/ISO 8041 system pk – pk

2. Horizontal Vibration (maximum): 12 mg ISO187338/ISO 8041 system pk – pk

3. Jerk Rate (maximum): 3.3 ft/sec3

4. Acceleration (maximum): 1.3 ft/sec2

5. In Car Noise: 55 dB(A) Maximum

6. Leveling Accuracy: ±0.2 inches

7. Starts per hour (maximum): 240

1.4 SUBMITTALS

A. Comply with Section 01 33 00 - Submittal Procedures.

B. Product Data: Submit manufacturer's product literature for each proposed system.

1. Cab design, dimensions and layout.

2. Layout, finishes, and accessories and available options.

3. Controls, signals and operating system.

4. Color selection charts for cab and entrances.

C. Shop Drawings:

1. Clearances and travel of car.
2. Clear inside hoistway and pit dimensions.
3. Location and layout of equipment and signals.
4. Car, guide rails, buffers and other components in hoistway.
5. Maximum rail bracket spacing.
6. Maximum loads imposed on building structure.
7. Hoist beam requirements.
8. Location and sizes of access doors.
9. Location and details of hoistway door and frames.
10. Electrical characteristics and connection requirements.

D. Operation and maintenance data:

1. Provide manufacturer's standard maintenance and operation manual.

E. Diagnostic Tools

1. Prior to seeking final acceptance for the completed project as specified by the Contract Documents, the Elevator Contractor shall deliver to the Owner any specialized tool(s) that may be required to perform diagnostic evaluations, adjustments, and/or parametric software changes and/or test and inspections on any piece of control or monitoring equipment installed.

   This shall include any specialized tool(s) required for monitoring, inspection and/or maintenance where the means of suspension other than conventional wire ropes are furnished and installed by the Elevator Contractor. Any and all such tool(s) shall become property of the Owner. Any diagnostic tool provided to the Owner by the Elevator Contractor shall be configured to perform all levels of diagnostics, systems adjustment and parametric software changes which are available to the Elevator Contractor.

   In those cases where diagnostic tools provided to the Owner require periodic recalibration/or re-initiation, the Elevator Contractor shall perform such tasks at no additional cost to the Owner for a period equal to the term of the maintenance agreement from the date of final acceptance of the competed project During those intervals in which the Owner might find it necessary to surrender a diagnostic tool for re-calibration, re-initiation, or repair, the Elevator Contractor shall provide a temporary replacement for the tool at no additional cost to the Owner.

   The Elevator Contractor shall deliver to the Owner, printed instructions for the proper use of any tool that may be necessary to perform diagnostic evaluations, system adjustment, and/or parametric software changes on any unit of microprocessor-based elevator control equipment and means of suspension other than standard elevator steel cables furnished and install by the Elevator Contractor.
   Accompanying the printed instructions shall be any and all access codes, password, or other proprietary information that is necessary to interface with the microprocessor-control equipment.

1.5 QUALITY ASSURANCE

A. Manufacturer: Minimum of fifteen years' experience in the fabrication, installation and service of elevators of the type and performance of the specified. The manufacturer shall have a documented quality assurance program.

B. Installer: The equipment manufacturer shall install the elevator.

C. Inspection and Testing: In accordance with requirements of local jurisdiction, obtain required permits, inspections and tests.

1.6 DELIVERY, STORAGE AND HANDLING

A. If the construction site is not prepared to receive the elevator equipment at the agreed ship date, the General Contractor shall be responsible for the cost of storage at an approved facility. Additional labor costs for double handling will be the responsibility of the General Contractor.

B. Delivered elevator materials shall be stored in a protected environment in accordance with manufacturer recommendations. A minimum storage area of 10 feet by 20 feet is required adjacent to the hoistway.

1.7 WARRANTY

A. Provide manufacturer warranty for a period of one year. The warranty period is to begin upon final acceptance of the Contract. Warranty covers defects in materials and workmanship. Damage due to ordinary use, vandalism, improper or insufficient maintenance, misuse, or neglect do not constitute defective material or workmanship.

1.8 MAINTENANCE SERVICE

A. The elevator manufacturer shall provide maintenance service consisting of regular examinations and adjustments of the elevator equipment for a period of 12 Months after date of final acceptance.

Predictive maintenance shall be included for the full maintenance period. This service must be capable of using AI-based analytics to identify potential equipment issues and notifying the elevator provider via an internet connection.

Replacement parts shall be produced by the original equipment manufacturer.

B. Maintenance service to be performed during regular working hours of regular working days and shall include emergency call back service during regular working hours.

C. Maintenance service shall not include adjustments, repairs or replacement of parts due to negligence, misuse, abuse or accidents.

PART 2: PRODUCTS

2.1 MANUFACTURER

A. Provide AC gearless machine room-less elevator systems subject to compliance with the design and performance requirements of this specification. Elevator manufacturers may include but are not limited to one of the following:

1. Basis of Design: KONE Machine Room-Less traction elevators by KONE, Inc.

(www.kone.com).

2. Other acceptable machine room-less products: manufacturer with minimum 15 years' experience in manufacturing, installing, and servicing elevators of the type required for the project.

2.2 EQUIPMENT: CONTROL COMPONENTS AND CONTROL SPACE

A. Controller: Provide microcomputer-based control system to perform all functions.

1. All high voltage (110V or above) contact points inside the controller cabinet shall be protected from accidental contact in a situation where the controller doors are open.

2. Controller shall be separated into two distinct halves; Motor Drive side and Control side. High voltage motor power conductors shall be routed and physically segregated from the rest of the controller.

3. Provide a serial cardrack and main CPU board containing a non- erasable EPROM and operating system firmware.

4. Variable field parameters and adjustments shall be contained in a non- volatile memory module.

B. Drive: Provide Variable Voltage Variable Frequency AC drive system to develop high starting torque with low starting current.

C. Controller Location: Locate controller{s} in the front wall integrated with the top landing entrance frame, machine side of the elevator. One non-fused three phase permanent power in hoist way at top landing. A separate control space should not be required.

2.3 EQUIPMENT: HOISTWAY COMPONENTS

A. Machine: AC gearless machine, with permanent magnet synchronous motor, direct current electro-mechanical disc brakes and integral traction drive sheave, mounted to the car guide rail at the top of the hoistway

B. Governor: Friction type over-speed governor rated for the duty of the elevator specified.

C. Buffers, Car and Counterweight: Polyurethane buffer.

D. Hoistway Operating Devices:

1. Emergency stop switch in the pit

2. Terminal stopping switches.

3. Emergency stop switch on the machine

E. Positioning System: System consisting of magnets and proximity switches.

F. Guide Rails and Attachments: Steel rails with brackets and fasteners.

2.4 EQUIPMENT: HOISTWAY ENTRANCES

A. Hoistway Entrances

1. Sills: Extruded Aluminum.

2. Doors: Hollow metal construction with vertical internal channel reinforcements.

3. Fire Rating: Entrance and doors shall be UL fire-rated for 1-1/2 hour.

4. Entrance Finish: Brushed Stainless Steel.

5. Entrance Markings Jamb Plates: Provide standard entrance jamb tactile markings on both jambs, at all floors. Plate Mounting: Refer to manufacturer drawings.

2.5 EQUIPMENT: CAR COMPONENTS

A. Car Frame: Provide car frame with adequate bracing to support the platform and car enclosure.

B. Car Safeties: Device will be provided and mounted under the car platform, securely bolted to the Car Frame. The safety will be actuated by a centrifugal governor mounted at the top of the hoistway. The Safety is designed to operate in case the car attains excessive descending speed.

C. Platform: Platform shall be all steel construction.

D. Car Guides: Provide guide-shoes mounted to top and bottom of both car and counterweight frame. Each guide-shoe assembly shall be arranged to maintain constant contact on the rail surfaces. Provide retainers in areas with Seismic design requirements.

E. Car Wall Finish:

1. Side Walls: Scottish Quad Textured Stainless Steel (K)

2. Rear Wall: Scottish Quad Textured Stainless Steel (K)

3. Car front, Door and Skirting: Brushed Stainless Steel

4. Ceiling: Round, LED spotlights

5. Handrails: Brushed Stainless Steel

   a. Rails to be located on Side Walls of car enclosure.

6. Sills: Aluminum extruded.

F. Cab Wall Protection Pads to be included

G. Flooring: By others. (Not to exceed 6lb/sqft and 1/2" finished depth.)

H. Emergency Car Signals

1. Emergency Siren: Siren mounted on top of cab that is activated when the alarm button in the car operating panel is engaged. Siren shall have rated sound pressure level of 80 dB(A) at a distance of three feet from device. Siren shall respond with a delay of not more than one second after activation of alarm button.

2. Emergency Car Lighting: Provide emergency power unit employing a 12- volt sealed rechargeable battery and totally static circuits shall illuminate the elevator car and provide current to the alarm bell in the event of building power failure.

3. Emergency Exit Contact: An electrical contact shall be provided on the car-top exit.

I. Ventilation: Manufacturer's standard cab fan

2.6 EQUIPMENT: SIGNAL DEVICES AND FIXTURES

A. Car Operating Panel: Provide car operating panel with all push buttons, key switches, and message indicators for elevator operation. Fixture finish to be Brushed Stainless Steel

1. Main Flush mounted car operating panel shall contain a bank of round, mechanical, illuminated buttons marked to correspond to landings served, emergency call button, door open button, door close button, and key switches for lights, inspection, and exhaust fan. Buttons have Amber Dot Matrix illumination (halo). All buttons to have raised text and Braille marking on left hand side. The car operating display panel shall be Amber Dot Matrix. All texts, when illuminated, shall be Amber Dot Matrix. The car operating panel shall have a Brushed Stainless Steel finish.

2. Additional features of car operating panel shall include:

a. Car Position Indicator within operating panel Brushed Stainless Steel

b. Elevator Data Plate marked with elevator capacity and car number on car top.

c. Help buttons with raised markings.

d. In car stop switch per local code.

e. Call Cancel Button.

B. Hall Fixtures: Wall mounted hall fixtures shall be provided with necessary push buttons and key switches for elevator operation. Wall mounted hall fixtures shall have a Brushed Stainless Steel finish.

1. Vandal Resistant hall fixtures shall feature round, mechanical, buttons in applied mount face frame. Hall fixtures shall correspond to options available from that landing. Buttons shall be in a vertically mounted fixture.

C. Car Lantern and Chime: A directional lantern visible from the corridor shall be provided in the car entrance. When the car stops and the doors are opening, the lantern shall indicate the direction in which the car is to travel, and a chime will sound. The chime will sound once for up and twice for down. The car riding lantern face plate shall have a Brushed Stainless Steel finish.

2.7 EQUIPMENT: ELEVATOR OPERATION AND CONTROLLER

A. Elevator Operation

1. Simplex Collective Operation: Using a microprocessor-based controller, operation shall be automatic by means of the car and hall buttons. If all calls in the system have been answered, the car shall park at the last landing served.

2. Zoned Car Parking.

3. Relative System Response Dispatching.

B. Standard Operating Features to include:

1. Full Collective Operation

2. Fan and Light Control.

3. Load Weighing Bypass.

4. Ascending Car Uncontrolled Movement Protection

5. Top of Car Inspection Station.

C. Additional Operating Features to include:

1. Independent Service.
2. Hoistway Access Bottom Landing.
3. Hoistway Access Top Landing.
4. Car Wall Protection Pads
5. Provision for Card Reader in Car (Card Reader provided and Installed by others).

6. Emergency Battery Power Supply
   a. When the main line power is lost for longer than 5 seconds the emergency battery power supply provides power automatically to the elevator controller. The elevator will rise or lower to the first available landing, open the doors, and shut down. The elevator will return to service upon the return of normal main line power. An auxiliary contact on the main line disconnect and shunt trip breaker (if required) shall be provided by others.

D. Elevator Control System for Inspections and Emergency

1. Provide devices within controller to run the elevator in inspection operation.

2. Provide devices on car top to run the elevator in inspection operation.

3. Provide within controller an emergency stop switch to disconnect power from the brake and prevents motor from running.

4. Provide the means from the controller to mechanically lift and control the elevator brake to safely bring car to nearest available landing when power is interrupted.

5. Provide the means from the controller to reset the governor over speed switch and also trip the governor.

6. Provide the means from the controller to reset the emergency brake when set because of an unintended car movement or ascending car over speed.

7. Provide the means for the control to reset elevator earthquake operation.

2.8 EQUIPMENT: DOOR OPERATOR AND CONTROL

A. Door Operator: A closed loop permanent magnet VVVF high-performance door operator shall be provided to open and close the car and hoistway doors simultaneously. Door movement shall be cushioned at both limits of travel. Electro-mechanical interlock shall be provided at each hoistway entrance to prevent operation of the elevator unless all doors are closed and locked. An electric contact shall be provided on the car at each car entrance to prevent the operation of the elevator unless the car door is closed.

B. The door operator shall be arranged so that, in case of interruption or failure of electric power, the doors can be readily opened by hand from within the car, in accordance with applicable code. Emergency devices and keys for opening doors from the landing shall be provided as required by local code.

C. Doors shall open automatically when the car has arrived at or is leveling at the respective landings. Doors shall close after a predetermined time interval or immediately upon pressing of a car button. A door open button shall be provided in the car. Momentary pressing of this button shall reopen the doors and reset the time interval.

D. Door hangers and tracks shall be provided for each car and hoistway door. Tracks shall be contoured to match the hanger sheaves. The hangers shall be designed for power operation with provisions for vertical and lateral adjustment. Hanger sheaves shall have polyurethane tires and pre-lubricated sealed-for-life bearings.

E. Electronic Door Safety Device. The elevator car shall be equipped with an electronic protective device extending the full height of the car. When activated, this sensor shall prevent the doors from closing or cause them to stop and reopen if they are in the process of closing. The doors shall remain open as long as the flow of traffic continues and shall close shortly after the last person passes through the door opening.

PART 3: EXECUTION

3.1 EXAMINATION

A. Field measure and examine substrates, supports, and other conditions under which elevator work is to be performed.

B. Do not proceed with work until unsatisfactory conditions are corrected.

C. Prior to start of work, verify hoistway is in accordance with shop drawings. Dimensional tolerance of hoistway from shop drawings: -0 inches +2 inches. Do not begin work of this section until dimensions are within tolerances.

D. Prior to start of work, verify projections greater than two inches (four inches if ASME A17.1/CSA B44 2000 applies) must be beveled not less than 75 degrees from horizontal.

E. Prior to start of work, verify landings have been prepared for entrance sill installation. Traditional sill angle or concrete sill support shall not be required.

F. Prior to start of work, verify elevator pit has been constructed in accordance with requirements, is dry and reinforced to sustain vertical forces, as indicated in approved submittal. Verify that sumps or sump pumps located within pit will not interfere with installed elevator equipment.

G. Prior to start of work, verify control space has been constructed in accordance with requirements, with access coordinated with elevator shop drawings, including sleeves and penetrations.

H. Verify installation of GFCI protected 20-amp in pit and adjacent to each signal control cabinet in control space.

3.2 PREPARATION

A. Coordinate installation of anchors, bearing plates, brackets and other related accessories.

3.3 INSTALLATION

A. Install equipment, guides, controls, car and accessories in accordance with manufacturer installation methods and recommended practices.

B. Properly locate guide rails and related supports at locations in accordance with manufacturer's recommendations and approved shop drawings. Anchor to building structure using isolation system to minimize transmission of vibration to structure.

C. All hoistway frames shall be securely fastened to fixing angles mounted in the hoistway. Coordinate installation of sills and frames with other trades.

D. Lubricate operating system components in accordance with manufacturer recommendations.

E. Perform final adjustments, and necessary service prior to final acceptance.

3.4 CONSTRUCTION

A. Interface with Other Work:

1. Guide rail brackets attached to steel shall be installed prior to application of fireproofing.

2. Coordinate construction of entrance walls with installation of door frames and sills. Maintain front wall opening until elevator equipment has been installed.

3. Ensure adequate support for entrance attachment points at all landings.

4. Coordinate wall openings for hall push buttons, signal fixtures and sleeves. Each elevator requires sleeves within the hoistway wall.

5. Coordinate emergency power transfer switch and power change pending signals as required for termination at the primary elevator signal control cabinet in each group.

6. Coordinate interface of elevators and fire alarm system.

7. Coordinate interface of dedicated telephone line.

3.5 TESTING AND INSPECTIONS

A. Perform recommended and required testing in accordance with authority having jurisdiction

B. Obtain required permits and provide originals to Owner's Representative.

3.6 DEMONSTRATION

A. Prior to final acceptance, instruct Owner's Representative on the proper function and required daily maintenance of elevators. Instruct personnel on emergency procedures.

THIS PAGE LEFT INTENTIONALLY BLANK

SECTION 21 13 00 – BUILDING SPRINKLER AND STANDPIPE SYSTEMS

1 GENERAL

1.1 Drawings and General provisions of Contract, including General and Supplementary Conditions and Division-1 Specification sections, apply to work of this section.

1.2 Division-23 Basic Mechanical Requirements and Basic Mechanical Materials and Methods sections apply to work of this section.

1.3 Extent of fire protection work is indicated on drawings and schedules, and by requirements of this section.

1.4 Refer to Division-2 sections for site fire protection piping and appurtenances; not work of this section.

1.5 Refer to other Division-21 sections for fire pumps and appurtenances; not work of this section.

1.6 Refer to Division-9 sections for painting of fire protection piping; not work of this section.

1.7 Refer to Division-26 sections for the following work; not work of this section.

1.7.1 Power supply wiring from power source to power connection on air compressors and local alarm bells. Include disconnects and required electrical devices, except where specified as furnished or factory-installed by manufacturer.

1.7.2 Fire alarm connections for all flow switches, pressure switches, and supervisory (tamper) switches.

1.8 Quality Assurance: The Sprinkler Contractor shall be qualified as follows:

1.8.1 Experience: Contractor shall have a minimum of ten years continuous experience.

1.8.2 Home Office: The home office for the contractor shall be located within 125 miles of the project site.

1.9 Codes and Standards:

1.9.1 NFPA Compliance: Install fire protection systems in accordance with NFPA 13 "Standard for the Installation of Sprinkler Systems" and NFPA 14 "Standard for the Installation of Standpipe and Hose Systems".

1.9.2 UL Compliance: Provide fire protection products in accordance with UL standards; provide UL label on each product.

1.9.3 Fire Department/Marshal Compliance: Install fire protection systems in accordance with

local regulations of fire department or fire marshal.

1.9.4 Screw Thread Connections: Comply with local Fire Department/Fire Marshal regulations for sizes, threading and arrangement of connections for fire department equipment to sprinkler systems.

1.10 Approval Submittals:

1.10.1 Product Data: Submit manufacturer's technical product data and installation instructions for:

1.10.2 Pipe and fittings

1.10.3 Basic pipe supports and hangers

1.10.4 Basic valves

1.10.5 Special valves

1.10.6 Pressure gauges

1.10.7 Automatic sprinklers

1.10.8 Siamese connections

1.10.9 Cabinets

1.10.10 Working (Shop) Drawings: Prepare working (shop) drawings of fire protection systems indicating pipe sizes, pipe locations, pipe elevations, fittings, shutoffs, hangers, equipment, and coordination with other building systems. Submittal shall show all requirements per NFPA-13.

1.11 Test Reports and Verification Submittals:

1.11.1 Certificate: Submit certificate of Aboveground Installation upon completion of fire protection piping work which indicates that work has been tested in accordance with NFPA 13 and that system is operational, complete, and has no defects.

1.11.2 Tag: Submit a copy of the sprinkler system tag. The installing fire sprinkler contractor shall be licensed in accordance with State Fire Marshal (SFM) Rule 4A-46. At the conclusion of the project and prior to the final inspection by the SFM the Contractor shall tag the fire sprinkler system in accordance with 4A-46.041.

1.12 O&M Data Submittals:

1.12.1 Record Drawings: At project closeout, submit record drawings of installed fire protection

piping and products.

1.12.2 Maintenance Data: Submit a copy of all approval submittals. Submit maintenance data and parts lists for basic valves, special valves. Include these data in O&M manual.

1.12.3 NFPA 25: Provide a copy of NFPA 25 in each O&M Manual.

2 PRODUCTS

2.1 General: Provide piping materials and factory-fabricated piping products of sizes, types, pressure ratings, temperature ratings, and capacities as indicated. Where not indicated, provide proper selection as determined by Installer to comply with installation requirements. Provide sizes and types matching piping and equipment connections; provide fittings of materials which match pipe materials used in fire protection systems. Where more than one type of material or products are indicated, selection is Installer's option.

2.2 Basic Identification: Provide identification complying with Division-23 Basic Mechanical Materials and Methods section "Mechanical Identification", in accordance with the following listing:

Fire Protection Piping: Plastic pipe markers. Fire piping exposed in mechanical and electrical rooms shall be painted red.

Fire Protection Valves: Plastic or brass valve tags

Fire Protection Signs: Provide the following signs:

At each sprinkler valve, sign indicating what portion of system valve controls and hydraulic design data.

At each outside alarm device, sign indicating what authority to call if device is activated.

At each auxiliary drain, a sign indicating location.

2.3 Basic Pipes and Pipe Fittings: Provide pipes and pipe fittings complying with Division-23 Basic Mechanical Materials and Methods section "Pipes and Pipe Fittings", in accordance with the following listing. Where multiple listings are made for a particular type system, the material is the Installer’s option.

2.4 Wet Pipe: Seamless ERW black steel pipe; Schedule 40 for less than 8"; Schedule 30 for 8" and larger. Fittings and joints shall be as follows.

1 Class 125, cast-iron threaded fittings with threaded joints.

2 Mechanical grooved pipe coupling and fittings; cut-groove type with mechanical joints.

3 Wrought steel buttwelding fittings with welded joints.

2.4.1 Fire Pump Suction: Seamless ERW galvanized steel pipe, Schedule 40.

1 Class 150 malleable iron galvanized threaded fittings.

2 Mechanical grooved pipe couplings and fittings; roll-groove or mechanical locking type with mechanical joints.

2.5 Basic Piping Specialties: Provide piping specialties complying with Division-23 Basic Mechanical Materials and Methods section "Piping Specialties".

2.6 Basic Supports and Anchors: Provide supports and anchors complying with Division-23 Basic Mechanical Materials and Methods section "Supports and Anchors", in accordance with the following listing:

Adjustable steel clevis hangers or adjustable steel band hangers for horizontal-piping hangers and supports.

Two-bolt riser clamps for vertical piping supports.

Steel turnbuckles and malleable iron sockets for hanger-rod attachments.

Concrete inserts, top-beam C-clamps, side beam or channel clamps or center beam clamps for building attachments.

2.7 Basic Valves: Provide interior valves complying with Division-23 Basic Mechanical Materials and Methods section "Valves", in accordance with the following listing:

2.7.1 Standard Service Code-Required OS&Y Valves: GA-6, GA-7.

2.7.2 Standard Service Sectional Valves: GA-6, GA-7. BF-6, BF-7.

2.7.3 Standard Service Indicating Valves: GA-6, GA-7, BA-6.

2.7.4 Standard Service Trim Valves: GA-6, BA-4.

2.7.5 Standard Service Check Valves: CK-4, CK-5.

2.8 Special Valves:

2.8.1 General: Provide valves, UL listed, in accordance with the following listing. Provide sizes and types which mate and match piping and equipment connections.

2.8.2 Alarm Check Valve: Provide cast-iron water flow alarm check valve, 175 psi working

pressure, with retard chamber.

2.8.3 Hose Outlet Valves: Provide angle hose valves, 2-1/2" size where not otherwise indicated. Provide chrome plated with escutcheons where mounted in cabinet. Provide chain and cap.

2.8.4 Ball Drip Check Valve: Provide fire department connection iron swing check valve, 175 psi rated working pressure, of size and end type indicated, with ball drip.

2.8.5 Acceptable Manufacturers: Subject to compliance with requirements, provide valves of one of the following:

Grinnell Fire Protection Systems Co., Inc.
Grunau Sprinkler Mfr. Co., Inc.
Reliable
Viking Corporation

2.9 Basic Meters and Gauges: Provide meters and gauges complying with Division-23 Basic Mechanical Materials and Methods section "Meters and Gauges", in accordance with the following listing:

2.9.1 Pressure gauges, 0-250 psi range.

2.10 Fire Protection Specialties: Provide fire protection specialties, UL listed, in accordance with the following listing. Provide sizes and types which mate and match piping and equipment connections.

2.10.1 Water Flow Indicators: Provide vane type water flow switches, with adjustable retard.

2.10.2 Electric Bell: Provide 10" weatherproof bell with red enameled finish, 90 db.

2.10.3 Supervisory Switches: Provide products recommended by manufacturer for use in service indicated.

2.10.4 Acceptable Manufacturers: Subject to compliance with requirements, provide fire protection specialties of one of the following:

Grinnell Fire Protection Systems Co., Inc.
Grunau Sprinkler Mfr. Co., Inc.
Guardian Fire Equipment, Inc.
Potter Roemer, Inc.
Reliable
Viking Corporation

2.11 Automatic Sprinklers: Provide automatic sprinklers and escutcheons of type indicated on drawings, and in accordance with the following listing. Provide quick response type

automatic sprinklers. Provide fusible links for 165°F unless otherwise indicated.

2.11.1 Sprinkler Types

Upright.
Pendent.
Recessed pendent.
Concealed pendent.
Horizontal sidewall.

2.11.2 Finish: White chrome-plated for recessed concealed heads in occupied areas. Chrome-plated for pendant heads in occupied areas. Cast brass for unoccupied areas.

2.11.3 Sprinkler Cabinet and Wrench: Furnish steel, baked red enameled, sprinkler box with capacity to store 10 sprinklers and wrench sized to sprinklers.

2.11.4 Acceptable Manufacturers: Subject to compliance with requirements, provide automatic sprinklers of one of the following:

Central Sprinkler Corp.
Grinnell Fire Protection Systems Co., Inc.
Star Sprinkler Mfg. Co. Inc.
Reliable
Viking Corp.

2.12 Siamese Connections:

2.12.1 Wall Type Siamese Connections: Provide wall type cast brass siamese connections and escutcheon plate assembly, with 2, 2-1/2" fire department inlets with female hose connections, fire hose connection screw thread (size and threads approved in writing by fire department), equipped with individual drop clapper valves, equipped with caps and chains, construction features as indicated, and constructed with the following additional construction features:

Finish: Chrome plate.

Inlet Pipe: As shown on the drawings.

Cast Lettering: "AUTO. SPKR. AND STANDPIPE."

Escutcheon: Rectangular.

Siamese Connection: Flush, adjacent inlets.

Basis of Design: Potter Roemer Figure 5020.

2.12.2 Acceptable Manufacturers: Subject to compliance with requirements, provide siamese connections of one of the following:

Allen (W.D.) Mfg. Div.
Croker-Standard
Elkhart Brass Mfg. Co., Inc.
Potter-Roemer Co.

3 EXECUTION

3.1 General: Examine areas and conditions under which fire protection materials and products are to be installed. Do not proceed with work until unsatisfactory conditions have been corrected in manner acceptable to Installer. Any installation, modification, or alteration of the sprinkler system shall be performed only by a person under a certificate of competency issued by the State Fire Marshal.

3.2 Installation of Basic Identification: Install mechanical identification in accordance with Division-23 Basic Mechanical Materials and Methods section "Mechanical Identification." Install fire protection signs on piping in accordance with NFPA 13 requirements. Continuously paint exposed fire piping red in mechanical and electrical rooms.

3.3 Installation of Pipes and Pipe Fittings:

3.3.1 General: Install pipes and pipe fittings in accordance with Division-23 Basic Mechanical Materials and Methods section "Pipes and Pipe Fittings."

3.3.2 Comply with requirements of NFPA 13 for installation of fire protection piping materials. Install piping products where indicated, in accordance with manufacturer's written instructions, and in accordance with recognized industry practices to ensure that piping systems comply with requirements and serve intended purposes.

3.3.3 Coordinate with other work as necessary to interface components of fire protection piping properly with other work.

3.3.4 Install drain piping at low points of piping system. Provide dry drum drips where indicated.

3.3.5 Install hose outlet valves in piping where hose outlets are indicated.

3.3.6 Install sectional valves in inlet piping, at bottom of each riser, and in loops as indicated.

3.3.7 Install fire department connection valves in piping where fire department connections are indicated.

3.3.8 Install water flow indicators where indicated.

3.3.9 Mount supervisory switches on each sectional valve.

3.3.10 Install pressure gauges where required and at top of each standpipe.

3.3.11 Install valved hose connections of sizes indicated, or ¾" size if not otherwise indicated, on sprinkler at ends of branch lines and cross mains and at locations where indicated. The intent is to meet the requirements of NFPA 13 and to achieve a fully drainable system.

3.3.13 Install Inspector's test connection where indicated, or at most remote point from riser.

3.4 Installation of Piping Specialties: Install piping specialties in accordance with Division-23 Basic Mechanical Materials and Methods section "Piping Specialties."

3.5 Installation of Supports and Anchors: Install supports and anchors, in accordance with Division-23 Basic Mechanical Materials and Methods section, "Supports and Anchors."

3.6 Installation of Valves: Install valves in accordance with Division-23 Basic Materials and Methods section "Valves." Provide valves to isolate each riser and elsewhere as required by NFPA 13 .

3.7 Installation of Meters and Gauges: Install meters and gauges in accordance with Division-23 Basic Mechanical Materials and Methods section "Meters and Gauges."

3.8 Installation of Fire Protection Specialties: Install fire protection specialties as indicated, and in accordance with NFPA 13. Furnish wiring requirements to electrical Installer for electrical wiring of supervisory switches.

3.9 Field Quality Control:

3.9.1 Sprinkler Piping Flushing: Prior to connecting sprinkler risers for flushing, flush feed mains, lead-in connections and control portions of sprinkler piping. After fire sprinkler piping installation has been completed and before piping is placed in service, flush entire sprinkler system, as required to remove foreign substances, under pressure as specified in NFPA 13. Continue flushing until water is clear, and check to ensure that debris has not clogged sprinklers.

3.9.2 Hydrostatic Testing: After flushing system, test fire sprinkler piping hydrostatically, for period of 24 hours, at not less than 200 psi or at 50 psi in excess of maximum static pressure when maximum static pressure is in excess of 150 psi. Check system for leakage of joints. Measure hydrostatic pressure at low point of each system or zone being tested.

3.9.3 Repair or replace piping system as required to eliminate leakage in accordance with NFPA standards for "little or no leakage" and retest as specified to demonstrate compliance.

3.10 Cleaning and Inspecting: Clean and inspect fire protection systems in accordance with requirements of Division-23 Basic Mechanical Materials and Methods section "Testing, Cleaning, and Sterilization of Piping Systems".

3.11 Extra Stock:

3.11.1 Heads: For each style and temperature range required, furnish additional sprinkler heads, amounting to one unit for every 100 installed units, but not less than 5 units of each.

3.11.2 Wrenches: Furnish 2 spanner wrenches for each type and size of valve connection and fire hose coupling. Obtain receipt from Owner that extra stock has been received.

3.12 Owner Instruction: Provide technical services for one 4-hour period to instruct Owner's personnel in operation and maintenance of building sprinkler systems. Schedule training date with Owner. Provide at least 7-day notice to Engineer and Owner of training date.

END OF SECTION

THIS PAGE INTENTIONALLY LEFT BLANK

SECTION 21 31 16 - DIESEL ENGINE DRIVE FIRE PUMP

1 GENERAL

1.1 Drawings and General provisions of Contract, including General and Supplementary Conditions and Division-1 Specification sections, apply to work of this section.

1.2 Division-15 Basic Mechanical Requirements and Basic Mechanical Materials and Methods sections apply to work of this section.

1.3 Extent of fire pump work is indicated on drawings and schedules, and by requirements of this section.

1.4 Refer to other Division-15 sections for exhaust insulation and for fire protection piping and fuel oil piping and appurtenances not specified herein; not work of this section.

1.5 Refer to Division-3, "Concrete" for pump bases; included as work of this section.

1.6 Refer to Division-9 "Painting" for painting of all piping and devices; not work of this section. All exposed piping in fire pump rooms shall be painted red.

1.7 Refer to Division-16 sections for the following work; not work of this section.

1.7.1 Power supply wiring from power source to power connection on pumps, engines, and controllers. Include disconnects and required electrical devices, except where specified as furnished, or factory-installed, by manufacturer.

1.7.2 Interlock wiring between engines, pumps and between controllers and field-installed control devices.

1.7.3 Fire alarm connections from fire pump controllers.

1.8 Codes and Standards:

1.8.1 NFPA Compliance: Install fire pumps in accordance with NFPA 20 "Standard for the Installation of Centrifugal Fire Pumps."

1.8.2 UL Compliance: Provide listed fire pumps and products in accordance with UL standards; provide UL label on each product.

1.8.3 FM Compliance: Provide fire pumps, products and installations in accordance with FM standards; provide FM label on each product.

1.8.4 Fire Department/Fire Marshal Compliance: Install fire pumps in accordance with local regulations of fire department or fire marshal.

1.8.5 Screw Thread Connections: Comply with local Fire Department/Fire Marshal regulations for sizes, threading and arrangement of connections for fire department equipment to fire protection systems.

1.8.6 National Electric Code: Provide fire pumps, controllers, and products complying with the National Electric Code, NFPA-70.

1.9 Approval Submittals:

1.9.1 Product Data: Submit manufacturer's technical product data, specifications, installation and start-up instructions, and pump characteristic performance curves with selection points clearly indicated. Submit manufacturer's assembly-type drawings for each product indicating dimensions, weight loadings, required clearances, and methods of assembly of components.

1.9.1.1 Fire pump

1.9.1.2 Fire pump engine

1.9.1.3 Fire pump engine controller

1.9.1.4 Fuel oil tank

1.9.1.5 Batteries and rack

1.9.1.6 Engine cooling system

1.9.1.7 Muffler

1.9.1.8 Exhaust flexible connector

1.9.1.9 Accessories

1.9.1.10 Jockey pump

1.9.1.11 Jockey pump controller

1.10 Test Reports and Verification Submittals:

1.10.1 Certified Test Report: Submit certified factory test results from hydrostatic test and performance tests (capacity, head, efficiency, and brake horsepower). Submit certified results of battery cranking cycle capability. All tests shall be performed in accordance with NFPA-20.

1.10.2 Pump Acceptance Test Report: Submit fire pump acceptance test report per NFPA-20.

1.10.3 Controller Acceptance Test Report: Submit fire pump controller acceptance test report per NFPA-20.

1.11 O&M Data Submittals:

1.11.1 Maintenance Data: Submit a copy of all approval submittals. Submit maintenance data and parts lists for each type of pump, engine, controller, batteries, and remote panels, including "trouble-shooting" maintenance guide. Include these data and wiring diagrams in O&M Manual; in accordance with requirements of Division 1.

1.11.2 Wiring Diagrams: Submit manufacturer's electrical requirements for power supply wiring to engines, pumps and controllers. Submit manufacturer's ladder-type wiring diagrams for interlock and control wiring. Clearly differentiate between portions of wiring that are factory-installed and portions to be field-installed. Include in O&M Manual.

2 PRODUCTS

2.1 General: Provide factory-tested pumps, engines, controllers, and related equipment, thoroughly cleaned, and painted prior to shipment. Type, size and capacity of each pump is listed in the schedule or on the drawings.

2.2 Acceptable Manufacturers: Subject to compliance with requirements, provide pumps and controllers of one of the following:

ITT-AC Pump
Aurora
Patterson
Peerless

2.3 Unit Purchase: Pump, engine, jockey pump, controller, and related equipment shall be purchased under a unit contract stipulating compliance with NFPA-20. The pump manufacturer shall be responsible for proper operation of the complete assembly as indicated by field acceptance tests.

2.4 Fire Pump: Provide UL-listed, diesel drive, horizontal split case fire pumps with the following performance and features:

2.4.1 Performance: The pump shall deliver at least 150% of rated capacity at 65% of rated head. The shutoff pressure shall not exceed 120% of rated pressure.

2.4.2 Type: Provide base-mounted, double-suction, bronze-fitted, single stage, centrifugal pump. Provide nameplate.

2.4.3 Drive: Provide diesel engine drive per NFPA-20. Provide flexible coupling, coupling guard, splash guard, and nameplate.

2.4.4 Mounting: Provide common base plate with machined registered fits for alignment.

2.4.5 Casing: Provide split casings with removable upper half to allow rotating element to be removed without disconnecting flanges.

2.4.6 Impellers: Provide cast bronze, enclosed type impellers, dynamically balanced and keyed to shaft.

2.4.7 Shaft: Provide steel shaft with replaceable shaft sleeve.

2.4.8 Casing Rings: Provide renewable casing wear rings designed so that pressure will seat them to the casing.

2.5 Fire Pump Accessories: Provide the following accessories:

2.5.1 Suction and discharge pressure gauges, 3-1/2" diameter, compound for suction duty.

2.5.2 Automatic circulation relief valve set less than shut off pressure and provisions for discharge to drain, ¾" size to 2500 gpm.

2.5.3 Relief valve and cone. Size per NFPA-20.

2.5.4 Eccentric tapered suction reducer.

2.5.5 Concentric tapered discharge increaser.

2.5.6 Float-operated auto air release for split case pumps.

2.5.7 Hose valves, caps, and chains, 2-1/2".

2.5.8 Hose valve test manifold with piping connections rated at gpm.

2.5.9 Flow measuring device to gpm.

2.5.10 Discharge tees.

2.6 Diesel Engine Drive: Provide UL-listed, factory mounted diesel engine drives complying with NFPA-20, with the following features:

2.6.1 Provide governor to regulate engine speed within 10% of rated speed from shutoff to maximum load. Provide device to field adjust, set, and secure the setting.

2.6.2 Provide overspeed device to automatically shutdown the engine at 120% of rated speed. Provide manual reset. Provide supervised trouble signal that remains on until the engine is reset.

2.6.3 Instrument Panel: Provide tachometer (rpm and totalizing), oil pressure gauge and temperature gauge for cooling water.

2.6.4 Provide main battery contactors capable of automatic or manual mechanical operation.

2.6.5 Provide for electric starting with two storage batteries and racks. Each battery shall be capable of cranking the engine through the cycle required by NFPA-20.

2.6.6 Provide for automatic battery recharging via engine alternator or generator and a separate AC power supply. The charger shall include rectifier, ammeter, and control panel.

2.6.7 Engine Cooling: Provide a closed circuit cooling system that is cooled by using water from the fire pump discharge. Provide engine driven circulating pump, heat exchanger, temperature regulating valve, pressure regulator, and all required valves, strainers, gauges, and fittings.

2.6.8 Fuel Oil System: Provide above ground fuel oil tank, size as shown on the drawings, with fill, drain and vent connections. Provide flame resistant flexible hoses, filters and other devices as required to make connections to the engine fuel oil pump.

2.6.9 Engine Exhaust: Provide corrugated flexible exhaust connector and muffler.

2.7 Engine Drive Controller: Provide factory-wired and tested, UL-listed engine drive controller, per NFPA-20, with the following features:

2.7.1 Provide grounded controllers with locked cabinets marked "DIESEL ENGINE FIRE PUMP CONTROLLER".

2.7.2 Provide voltage surge protection devices.

2.7.3 Provide local alarm and signal devices with separate visible alarms and common audible alarms. Provide alarms for:

Automatic position indicator (not in automatic)
Low oil pressure
High engine jacket temperature
Failure of engine to start automatically
Overspeed shutdown
Battery failure - each battery
Battery charger failure

2.7.4 Provide separate remote alarm and signal devices to fire alarm control panel (by Division-16) as follows:

Engine running.
Controller in off or manual.
Trouble on engine or controller.

2.7.5 Provide 7 day pressure recorder.

2.7.6 Automatic Control: Provide water pressure controller for automatic start. Provide weekly program timer with solenoid valve in pressure sensing line to automatically run the engine for 30 minutes once a week.

2.7.7 Nonautomatic Control: Provide manual electric switch on the controller to start engine regardless of water pressure.

2.7.8 Starting: Provide for starting engine from either battery unit. Changeover batteries automatically on successive starts. Provide alarm on failure to start after 6 crank periods. If one battery fails, lock in the operating battery for all starts.

2.7.9 Stopping: Provide for manual electric shutdown by a switch on the controller. Automatic shutdown shall occur by weekly timer, overspeed, or high temperature/low oil pressure if no other starting cause exists during engine test.

2.7.10 Provide startup service.

2.8 Jockey Pump and Accessories: Provide the following:

2.8.1 Centrifugal jockey pump and motor.

2.8.2 Relief valve.

2.8.3 Factory-wired and tested, UL-listed controller with HOA switch, fused disconnect switch, thermal overloads, external reset, magnetic starter, pressure controller, and running time indicator.

3 EXECUTION

3.1 General: Examine areas and conditions under which fire pump materials and products are to be installed. Do not proceed with work until unsatisfactory conditions have been corrected in manner acceptable to Installer.

3.2 Installation of Basic Identification: Install mechanical identification in accordance with Division-15 Basic Mechanical Materials and Methods section "Mechanical Identification".

3.3 Installation of Pipes and Pipe Fittings:

3.3.1 General: Install pipes and pipe fittings in accordance with Division-15 Basic Mechanical Materials and Methods section "Pipes and Pipe Fittings".

3.3.2 Comply with requirements of NFPA-13 for installation of fire protection piping materials. Install piping products where indicated, in accordance with manufacturer's written instructions, and in accordance with recognized industry practices to ensure that piping systems comply with requirements and serve intended purposes.

3.3.3 Install OS&Y valve in the fire pump suction as far from the pump as possible. Do not install ells within 5 pipe diameters of the pump suction and not in the plane parallel to the pump shaft. Sleeve all pipes through the wall or floor with proper clearance.

3.3.4 Install OS&Y valve and listed check valve in fire pump discharge. Provide anti-water hammer check valve where indicated.

3.3.5 Above grade suction piping shall be galvanized steel.

3.3.6 Install hose valve test manifold with OS&Y valve, listed check valve and ball drip.

3.4 Installation of Piping Specialties: Install piping specialties in accordance with Division-15 Basic Mechanical Materials and Methods section "Piping Specialties".

3.5 Installation of Supports and Anchors: Install supports and anchors, in accordance with Division-15 Basic Mechanical Materials and Methods section, "Support and Anchors".

3.6 Installation of Valves: Install valves in accordance with Division-15 Basic Materials and Methods section "Valves".

3.7 Installation of Meters and Gauges: Install meters and gauges in accordance with Division-15 Basic Mechanical Materials and Methods section "Meters and Gauges".

3.8 Install fire pump and engine in accordance with manufacturer's written instructions. Provide reinforced concrete pad, set and level unit, and align unit. Tighten bolts after piping has been connected and grout has set. Installation and alignment shall be performed under the supervision of a factory-trained representative.

3.9 Install jockey pump in accordance with the manufacturer's written instructions. Provide

concrete pad, gate valves, and discharge check valve.

3.10 Install controllers in accordance with the manufacturer's written instructions. Locate engine drive controller and jockey pump controller as close as practical, and within sight of the fire pump and jockey pump respectively. Maintain code clearances. Protect controllers from water spray.

3.11 Furnish electrical wiring diagrams and requirements to electrical installer. All electrical work shall be in accordance with the NEC and NFPA-20.

3.12 Cleaning and Inspecting: Clean and inspect fire protection system in accordance with requirements of Division-15 Basic Mechanical Materials and Methods section "Testing, Cleaning and Sterilization of Piping Systems".

3.13 Field Quality Control:

3.13.1 Test suction piping per NFPA-24 and discharge piping per NFPA-13.

3.13.2 Hydrostatic Testing: After flushing system, test fire sprinkler piping hydrostatically, for period of 24 hours, at not less than 200 psi or at 50 psi in excess of maximum static pressure when maximum static pressure is in excess of 150 psi. Check system for leakage of joints.

3.13.3 Repair or replace piping system as required to eliminate leakage in accordance with NFPA standards for "little or no leakage" and retest as specified to demonstrate compliance.

3.14 Pump Acceptance Tests: Perform pump flow tests in presence of manufacturer's representative, contractor, Engineer, fire department representative, and Owner. Provide all test equipment and perform tests per NFPA-20. Provide pump acceptance test report.

3.15 Controller Acceptance Tests: Perform controller tests in presence of manufacturer's representative, contractor, Engineer, fire department representative, and Owner. Provide all test equipment and perform tests per NFPA-20. Perform at least 10 automatic and 10 manual operations, each of at least 5 minutes duration. Test both sets of batteries. Tests shall result in at least one hour of pump run time. Provide controller acceptance test report.

3.16 Jockey Pump: Set to maintain 10 psi above fire pump setting.

END OF SECTION

THIS PAGE INTENTIONALLY LEFT BLANK

SECTION 22 01 00 - PLUMBING GENERAL

1 GENERAL

1.1 The work covered by this division consists of providing all labor, equipment and materials and performing all operations necessary for the installation of the plumbing work as herein called for and shown on the drawings.

1.2 Related Documents:

1.2.1 Drawings and general provisions of the Contract, including General and Supplementary Conditions and Division 1 Specification sections, apply to work of this section.

1.2.2 This is a Basic Plumbing Requirements Section. Provisions of this section apply to work of all Division 22 sections. Provisions of Division 23 Basic Mechanical Requirements apply to work of all Division 22 sections.

1.2.3 Review all other contract documents to be aware of conditions affecting work herein.

1.2.4 Definitions:

1.2.4.1 Provide: Furnish and install, complete and ready for intended use.

1.2.4.2 Furnish: Supply and deliver to project site, ready for subsequent requirements.

1.2.4.3 Install: Operations at project site, including unloading, unpacking, assembly, erection, placing, anchoring, applying, working to dimension, finishing, curing, protecting, cleaning, and similar requirements.

1.3 Permits and Fees: Contractor shall obtain all necessary permits, meters, and inspections required for his work and pay all fees and charges incidental thereto.

1.4 Verification of Owner's Data: Prior to commencing any work the Contractor shall satisfy himself as to the accuracy of all data as indicated in these plans and specifications and/or as provided by the Owner. Should the Contractor discover any inaccuracies, errors, or omissions in the data, he shall immediately notify the Architect/Engineer in order that proper adjustments can be anticipated and ordered. Commencement by the Contractor of any work shall be held as an acceptance of the data by him after which time the Contractor has no claim against the Owner resulting from alleged errors, omissions or inaccuracies of the said data.

1.5 Delivery and Storage of Materials: Materials delivered to site shall be inspected for damage, unloaded, and stored with a minimum of handling. All material shall be stored to provide protection from the weather and accidental damage.

1.6 Extent of work is indicated by the drawings, schedules, and the requirements of the specifications. Singular references shall not be constructed as requiring only one device if multiple devices are shown on the drawings or are required for proper system operation.

1.7 Field Measurements and Coordination:

1.7.1 The intent of the drawings and specifications is to obtain a complete and satisfactory installation. Separate divisional drawings and specifications shall not relieve the Contractor or subcontractors from full compliance of work of his trade indicated on any of the drawings or in any section of the specifications.

1.7.2 Verify all field dimensions and locations of equipment to insure close, neat fit with other trades' work. Make use of all contract documents and approved shop drawings to verify exact dimension and locations.

1.7.3 Coordinate work in this division with all other trades in proper sequence to insure that the total work is completed within contract time schedule and with a minimum cutting and patching.

1.7.4 Locate all apparatus symmetrical with architectural elements. Install to exact height and locations when shown on architectural drawings. When locations are shown only on plumbing drawings, be guided by architectural details and conditions existing at job and correlate this work with that of others.

1.7.5 Install work as required to fit structure, avoid obstructions, and retain clearance, headroom, openings and passageways. Cut no structural members without written approval.

1.7.6 Carefully examine any existing conditions, piping, and premises. Compare drawings with existing conditions. Report any observed discrepancies. It shall be the Contractor's responsibility to properly coordinate the work and to identify problems in a timely manner. Written instructions will be issued to resolve discrepancies.

1.7.7 Because of the small scale of the drawings, it is not possible to indicate all offsets and fittings or to locate every accessory. Drawings are essentially diagrammatic. Study carefully the sizes and locations of structural members, wall and partition locations, trusses, and room dimensions and take actual measurements on the job. Locate piping, ductwork, equipment and accessories with sufficient space for installing and servicing. Contractor is responsible for accuracy of his measurements and for coordination with all trades. Contractor shall not order materials or perform work without such verification. No extra compensation will be allowed because field measurements vary from the dimensions on the drawings. If field measurements show that equipment or piping cannot be fitted, the Architect/Engineer shall be consulted. Remove and relocate, without additional compensation, any item that is installed and is later found to encroach on space assigned to another use.

1.8 Guarantee:

1.8.1 The Contractor shall guarantee labor, materials and equipment for a period of one (1) year from Final Completion, or from Owner's occupancy, whichever is earlier. Contractor shall make good any defects and shall include all necessary adjustments to and replacement of defective items without expense to the Owner.

1.8.2 Owner reserves right to make emergency repairs as required to keep equipment in operation without voiding Contractor's Guarantee Bond nor relieving Contractor of his responsibilities during guarantee period.

1.9 Approval Submittals:

1.9.1 When approved, the submittal control log and submittals shall be an addition to the specifications herewith, and shall be of equal force in that no deviation will be permitted except with the approval of the Architect/Engineer.

1.9.1.1 Shop drawings, product literature, and other approval submittals will only be reviewed if they are submitted in full accordance with the General and Supplementary Conditions and Division 1 Specification sections and the following.

1.9.1.1.1 Submittals shall be properly organized in accordance with the approved submittal control log.

1.9.1.1.2 Submittals shall not include items from more than one specification section in the same submittal package unless approved in the submittal control log.

1.9.1.1.3 Submittals shall be properly identified by a cover sheet showing the project name, Architect and Engineer names, submittal control number, specification section, a list of products or item names with model numbers in the order they appear in the package, and spaces for approval stamps. A sample cover sheet is included at the end of this section.

1.9.1.1.4 Submittals shall have been reviewed and approved by the General Contractor (or Prime Contractor). Evidence of this review and approval shall be an "Approved" stamp with a signature and date on the cover sheet.

1.9.1.1.5 Submittals that include a series of fixtures or devices (such as plumbing fixtures or valves) shall be organized by the fixture number or valve type and be marked accordingly. Each fixture must include all items associated with that fixture regardless of whether or not those items are used on other fixtures.

1.9.1.1.6 The electrical design shown on the drawings supports the plumbing equipment basis of design specifications at the time of design. If plumbing equipment is submitted with different electrical requirements, it is the responsibility of the plumbing contractor to resolve all required electrical design changes (wire and conduit size, type of disconnect or overload protection, point(s) of connection, etc.) and clearly show the new electrical design on the plumbing submittal with a written statement that this change will be provided at no additional cost. Plumbing submittals made with no written reference to the electrical design will be presumed to work with the electrical design. Any corrections required will be at no additional cost.

1.9.2 If the shop drawings show variation from the requirements of contract because of standard shop practice or other reasons, the Contractor shall make specific mention of such variation in writing in his letter of transmittal and on the submittal cover sheet in order that, if acceptable, Contractor will not be relieved of the responsibility for executing the work in accordance with the contract.

1.9.3 Review of shop drawings, product literature, catalog data, or schedules shall not relieve the Contractor from responsibility for deviations from contract drawings or specifications, unless he has in writing called to the attention of the Architect/Engineer each such deviation in writing at the time of submission, nor shall it relieve him from responsibility for errors of any sort in shop drawings, product literature, catalog data, or schedules. Any feature or function specified but not mentioned in the submittal shall be assumed to be included per the specification.

1.9.4 Submit shop drawings as called for in other sections after award of the contract and before any material is ordered or fabricated. Shop drawings shall consist of plans, sections, elevations and details to scale (not smaller than ¼" per foot), with dimensions clearly showing the installation. Direct copies of small scale project drawings issued to the Contractor are not acceptable. Drawings shall take into account equipment furnished under other sections and shall show space allotted for it. Include construction details and materials.

1.10 Test Reports and Verification Submittals: Submit test reports, certifications and verification letters as called for in other sections. Contractor shall coordinate the required testing and documentation of system performance such that sufficient time exists to prepare the reports, submit the reports, review the reports and take corrective action within the scheduled contract time.

1.11 O&M Data Submittals: Submit Operation and Maintenance data as called for in other sections. When a copy of approval submittals is included in the O&M Manual, only the final "Approved" or "Approved as Noted" copy shall be used. Contractor shall organize these data in the O&M Manuals tabbed by specification number. Prepare O&M Manuals as required by Division 1 and as described herein.. Submit manuals at the Substantial Completion inspection.

2 PRODUCTS

2.1 All materials shall be new or Owner-supplied reused as shown on the drawings, the best of their respective kinds, suitable for the conditions and duties imposed on them at the building and shall be of reputable manufacturers. The description, characteristics, and requirements of materials to be used shall be in accordance with qualifying conditions established in the following sections.

2.2 Equipment and Materials:

2.2.1 Shall be new and the most suitable grade for the purpose intended. Equipment furnished under this division shall be the product of a manufacturer regularly engaged in the manufacture of such items for a period of three years. Where practical, all of the components shall be products of a single manufacturer in order to provide proper coordination and responsibility. Where required, Contractor shall furnish proof of installation of similar units or equipment.

2.2.2 Each item of equipment shall bear a name plate showing the manufacturer's name, trade name, model number, serial number, ratings and other information necessary to fully identify it. This plate shall be permanently mounted in a prominent location and shall not be concealed, insulated or painted.

2.2.3 The label of the approving agency, such as UL, IBR, ASME, ARI, AMCA, by which a standard has been established for the particular item shall be in full view.

2.2.4 The equipment shall be essentially the standard product of a manufacturer regularly engaged in the production of such equipment and shall be a product of the manufacturer's latest design.

2.2.5 A service organization with personnel and spare parts shall be available within two hours for each type of equipment furnished.

2.2.6 Install in accordance with manufacturer's recommendations. Place in service by a factory trained representative where required.

2.2.7 Materials and equipment are specified herein by a single or by multiple manufacturers to indicate quality, material and type of construction desired. Manufacturer's products shown on the drawings have been used as basis for design; it shall be the Contractor's responsibility to ascertain that alternate manufacturer's products, or the particular products of named manufacturers, meet the detailed specifications and that size and arrangement of equipment are suitable for installation.

2.2.8 Model Numbers: Catalog numbers and model numbers indicated in the drawings and specifications are used as a guide in the selection of the equipment and are only listed for the contractor's convenience. The contractor shall determine the actual model numbers for ordering materials in accordance with the written description of each item and with the intent of the drawings and specifications.

2.3 Requests for Substitution:

2.3.1 Where a particular system, product or material is specified by name, consider it as standard basis for bidding, and base proposal on the particular system, product or material specified.

2.3.2 Requests by Contractor for substitution will be considered only when reasonable, timely, fully documented, and qualifying under one or more of the following circumstances.

2.3.2.1 Required product cannot be supplied in time for compliance with Contract time requirements.

2.3.2.2 Required product is not acceptable to governing authority, or determined to be non-compatible, or cannot be properly coordinated, warranted or insured, or has other recognized disability as certified by Contractor.

2.3.2.3 Substantial cost advantage is offered Owner after deducting offsetting disadvantages including delays, additional compensation for redesign, investigation, evaluation and other necessary services and similar considerations.

2.3.3 All requests for substitution shall contain a "Comparison Schedule" and clearly and specifically indicate any and all differences or omissions between the product specified as the basis of design and the product proposed for substitution. Differences shall include but shall not be limited to data as follows for both the specified and substituted products:

Principal of operation.
Materials of construction or finishes.
Thickness of gauge of materials.
Weight of item.
Deleted features or items.
Added features or items.
Changes in other work caused by the substitution.
Performance curves.

If the approved substitution contains differences or omissions not specifically called to the attention of the Architect/Engineer, the Owner reserves the right to require equal or similar

features to be added to the substituted products (or to have the substituted products replaced) at the Contractor's expense.

3 EXECUTION

3.1 Workmanship: All materials and equipment shall be installed and completed in a first-class workmanlike manner and in accordance with the best modern methods and practice. Any materials installed which do not present an orderly and reasonably neat and/or workmanlike appearance, or do not allow adequate space for maintenance, shall be removed and replaced when so directed by the Architect/Engineer.

3.2 Coordination:

3.2.1 The Contractor shall be responsible for full coordination of the plumbing systems with shop drawings of the building construction so the proper openings and sleeves or supports are provided for piping, ductwork, or other equipment passing through slabs or walls.

3.2.2 Any additional steel supports required for the installation of any plumbing equipment, piping, or ductwork shall be furnished and installed under the section of the specifications requiring the additional supports.

3.2.3 It shall be the Contractor's responsibility to see that all equipment such as valves, dampers, filters and such other apparatus or equipment that may require maintenance and operation are made easily accessible, regardless of the diagrammatic location shown on the drawings.

3.2.4 All connections to fixtures and equipment shown on the drawings shall be considered diagrammatic unless otherwise indicated by detail. The actual connections shall be made to fully suit the requirements of each case and adequately provide for expansion and servicing.

3.2.5 The contractor shall protect equipment, material, and fixtures at all times. He shall replace all equipment, material, and fixtures which are damaged as a result of inadequate protection.

3.2.6 Prior to starting and during progress of work, examine work and materials installed by others as they apply to work in this division. Report conditions which will prevent satisfactory installation.

3.2.7 Start of work will be construed as acceptance of suitability of work of others.

3.3 Interruption of Service: Before any equipment is shut down for disconnecting or tie-ins, arrangements shall be made with the Architect/Engineer and this work shall be done at the time best suited to the Owner. This will typically be on weekends and/or holidays and/or after normal working hours. Services shall be restored the same day unless prior arrangements are made. All overtime or premium costs associated with this work shall be included in the base bid.

3.4 Phasing: Provide all required temporary valves, piping, ductwork, equipment and devices as required. Maintain temporary services to areas as required. Remove all temporary material and equipment on completion of work unless Engineer concurs that such material and equipment would be beneficial to the Owner on a permanent basis.

3.5 Cutting and Patching: Notify General Contractor to do all cutting and patching of all holes, chases, sleeves, and other openings required for installation of equipment furnished and installed under this section. Utilize experienced trades for cutting and patching. Obtain permission from Architect/Engineer before cutting any structural items.

3.6 Equipment Setting: Bolt equipment directly to concrete pads or vibration isolators as required, using hot-dipped galvanized anchor bolts, nuts and washers. Level equipment.

3.7 Painting: Touch-up factory finishes on equipment located inside and outside shall be done under Division 22. Obtain matched color coatings from the manufacturer and apply as directed. If corrosion is found during inspection on the surface of any equipment, clean, prime, and paint, as required.

3.8 Clean-up: Thoroughly clean all exposed parts of apparatus and equipment of cement, plaster, and other materials and remove all oil and grease spots. Repaint or touch up as required to look like new. During progress of work, contractor is to carefully clean up and leave premises and all portions of building free from debris and in a clean and safe condition.

3.9 Start-up and Operational Test: Start each item of equipment in strict accordance with the manufacturer's instructions; or where noted under equipment specification, start-up shall be done by a qualified representative of the manufacturer. Alignment, lubrication, safety, and operating control shall be included in start-up check.

3.10 Record Drawings:

3.10.1 During the progress of the work the Contractor shall record on their field set of drawings the exact location, as installed, of all piping, ductwork, equipment, and other systems which are not installed exactly as shown on the contract drawings.

3.10.2 Upon completion of the work, record drawings shall be prepared as described in the General Conditions, Supplementary Conditions, and Division 1 sections.

3.11 Acceptance:

3.11.1 Punch List: Submit written confirmation that all punch lists have been checked and the required work completed.

3.11.2 Instructions: At completion of the work, provide a competent and experienced person who is thoroughly familiar with project, for one day to instruct permanent operating personnel in operation of equipment and control systems. This is in addition to any specific equipment operation and maintenance training.

3.11.3 Operation and Maintenance Manuals: Furnish four complete manuals bound in ring binders with Table of Contents, organized, and tabbed by specification section. Manuals shall contain:

Detailed operating instructions and instructions for making minor adjustments.
Complete wiring and control diagrams.
Routine maintenance operations.

Manufacturer's catalog data, service instructions, and parts lists for each piece of operating equipment.
Copies of approved submittals.
Copies of all manufacturer's warranties.
Copies of test reports and verification submittals.

3.11.4 Record Drawings: Submit record drawings.

END OF SECTION 22 01 00

SECTION 22 07 00 - INSULATION FOR PLUMBING EQUIPMENT AND PIPING

1 GENERAL

1.1 Drawings and general provisions of Contract, including General and Supplementary Conditions and Division-1 Specification sections, apply to work of this section.

1.2 Division-22 Basic Plumbing Materials and Methods Sections apply to work of this section.

1.3 Division-23 Basic Mechanical Materials and Methods Sections apply to work of this section.

1.4 Approval Submittals:

1.4.1 Product Data: Submit a producer's data sheets and installation instructions on each insulation system including insulation, coverings, adhesives, sealers, protective finishes, and other material recommended by the manufacturer for applications indicated. Submit for:

Fiberglass pipe insulation
Cellular glass pipe below ground insulation
Flexible unicellular piping insulation

1.5 O&M Data Submittals: Submit a copy of all approval submittals. Include in O&M Manual.

2 PRODUCTS

2.1 Acceptable Manufacturers: Subject to compliance with requirements, provide insulation products by Armstrong, Johns Manville, Knauf, Owens Corning, Pittsburgh Corning, U.S. Rubber, or approved equal. All products shall be asbestos-free.

2.2 Flame/Smoke Ratings: Provide composite mechanical insulation (insulation, jackets, coverings, sealers, mastics, and adhesive) with a flame-spread rating of 25 or less, and a smoke-developed rating of 50 or less, as tested by ANSI/ASTM E84.

2.3 Pipe Insulation Materials:

2.3.1 Fiberglass Pipe Insulation: ASTM C547, Class 1 unless otherwise indicated. (Preformed sleeving with white all-service jacket, suitable for temperatures up to 450°F)

2.3.2 Cellular Glass Pipe Insulation: ASTM C552, Type II, Class 1. (Uncovered.)

2.3.3 Flexible Unicellular Pipe Insulation: ASTM C534, Type I. (Tubular, suitable for use to 200ºF.)

2.3.4 Staples, Bands, Wires, and Cement: As recommended by the insulation manufacturer for applications indicated.

2.3.5 Adhesives, Sealers, Protective Finishes: Products recommended by the insulation manufacturer for the application indicated.

2.3.6 Jackets: ASTM C921, Type I (vapor barrier) for piping below ambient temperature, Type II (vapor permeable) for piping above ambient temperature. Type I may be used for all piping at Installer's option.

3 EXECUTION

3.1 General:

3.1.1 Install thermal insulation products in accordance with manufacturer's written instructions, and in compliance with recognized industry practices to ensure that insulation serves intended purpose.

3.1.2 Install insulation materials with smooth and even surfaces and on clean and dry surfaces. Redo poorly fitted joints. Do not use mastic or joint sealer as filler for gapping joints and excessive voids resulting from poor workmanship.

3.1.3 Maintain integrity of vapor-barrier on insulation and protect it to prevent puncture and other damage. Label all insulation "ASBESTOS FREE".

3.1.4 Do not apply insulation to surfaces while they are hot or wet.

3.1.5 Do not install insulation until systems have been checked and found free of leaks. Surfaces shall be clean and dry before attempting to apply insulation. A professional insulator with adequate experience and ability shall install insulation.

3.1.6 Do not install insulation on pipe systems until acceptance tests have been completed except for flexible unicellular insulation. Do not install insulation until the building is "dried-in".

3.2 Fiberglass Pipe Insulation:

3.2.1 Insulate the following piping systems (indoor locations):

3.2.1.1 Domestic hot water, 141º-180° F: up to 1-1/4" pipe - 1½" thick, over 1-1/4" pipe 2" thick.

3.2.1.2 Domestic hot water and hot water return, 105º-140° F: up to 3" pipe - 1½" thick, over 3" pipe - 2" thick.

3.2.2 Apply insulation to pipe with all side and end joints butted tightly. Seal longitudinal lap by pressurizing with plastic sealing tool. Apply 3 inch wide self sealing butt strips to joints between insulation sections. Insulate all fittings, flanges, valves and strainers with premolded insulation. Apply coat of insulating cement to fittings and wrap with glass cloth overlapping each wrap 1" and adjacent pipe 2". Finish with heavy coat of general purpose mastic. Premolded PVC covers may also be used, but no flexible inserts are allowed.

3.2.3 Provide hanger or pipe support shields of 16 gauge (minimum) galvanized steel over the insulation which extends halfway up the pipe insulation cover and at least 6" on each side of the hanger.

3.2.4 Omit insulation on exposed plumbing fixture runouts from faces of wall or floor to fixture; on unions, flanges, strainer blowoffs, flexible connections and expansion joints.

3.3 Cellular Glass Pipe Insulation (Underground):

3.3.1 Insulate the following piping systems:

3.3.1.1 Domestic hot water: smaller than 6" pipe -1½" thick, 6" and larger pipe -2" thick.

3.3.2 Cut insulation in sections at fittings and carefully fit to the pipe and fittings. No stovepipe or single miter insulation is allowed. Apply vapor barrier mastic to all edges of the cellular insulation and between joints in the insulation. Wire the cellular glass in place with stainless steel wire 9 inches on center. Finish with a prefabricated water barrier self-sealing jacket similar to Pittsburg Corning “Pittwrap SSII”, 70 mils thickness. Insulate all anchors, guides, wall penetrations, expansion joints, loops and ells in accordance with the manufacturer's recommendations. Use rubber spacers at all expansion fittings.

3.4 Flexible Unicellular Pipe Insulation:

3.4.1 Insulate the following piping systems:

3.4.1.1 Horizontal above-grade waste piping receiving condensate from air conditioning units to points of connection receiving waste from 4 or more fixtures - ½" thick.

3.4.1.2 Horizontal above grade waste piping receiving discharge from ice machines, coolers, freezers or similar units to points of connection receiving waste form 4 or more fixtures - ½" thick.

3.4.1.3 Floor drain bodies located above ceiling or above grade and receiving condensate from air conditioning units.

3.4.1.4 Air compressor after-cooler piping - ¾" thick.

3.4.2 Apply insulation in accordance with the manufacturer's recommendations and instructions. Mitre cut insulation to fit pipe fittings. Use approved cement to seal all joints and ends in the insulation.

END OF SECTION 22 07 00

THIS PAGE INTENTIONALLY LEFT BLANK

SECTION 22 11 13 - POTABLE WATER SYSTEM

1 GENERAL

1.1 Drawings and general provisions of Contract, including General and Supplementary Conditions and Division-1 Specification sections, apply to work of this section.

1.2 Division-22 Basic Plumbing Requirements and Basic Plumbing Materials and Methods sections apply to work of this section.

1.3 Division-23 Basic Mechanical Materials and Methods Sections apply to work of this section.

1.4 Extent of potable water systems work, is indicated on drawings and schedules, and by requirements of this section.

1.5 Refer to appropriate Division-2 sections for exterior potable water system; not work of this section unless noted.

1.6 Insulation for potable water piping is specified in other Division-22 sections, and is included as work of this section. Insulation requirements include:

1.6.1 Domestic hot water piping

1.7 Excavation and backfill required in conjunction with water piping is specified in other Division-23 sections, and is included as work of this section.

1.8 Code Compliance: Comply with applicable portions of Florida Building Code-Plumbing pertaining to selection and installation of plumbing materials and products. Comply with local utility requirements.

1.9 Approval Submittals:

1.9.1 Product Data: Submit manufacturer's technical product data and installation instructions for:

Valves
Strainers
Hose bibbs
Wall hydrants
Water hammer arresters
Relief valves
Trap primers
Access doors

1.10 Test Reports and Verification Submittals:

1.10.1 Disinfection: Submit report by Health Department.

1.11 O&M Data Submittals: Submit a copy of all approval submittals. Submit maintenance data and parts lists for valves, trap primers. Include these data in O&M manual.

2 PRODUCTS

2.1 General: Provide piping materials and factory-fabricated piping products of sizes, types, pressure ratings, temperature ratings, and capacities as indicated. Where not indicated, provide proper selection as determined by Installer to comply with installation requirements. Provide materials and products complying with Florida Building Code-Plumbing where applicable. Provide sizes and types matching pipe materials used in potable water systems. Where more than one type of materials or products is indicated, selection is Installer's option.

2.2 Acceptable Manufacturers: Subject to compliance with requirements, provide products of one of the following listed for each item.

2.3 Identification: Provide identification complying with Division-23 Basic Mechanical Materials and Methods section "Mechanical Identification". Provide manufacturer's standard permanent, bright-colored, continuous-printed plastic tape, intended for direct burial service; not less than 6" wide x 4 mils thick. Provide blue tape with black printing reading "CAUTION WATER LINE BURIED BELOW".

2.4 Pipes and Fittings: Provide pipes and pipe fittings complying with Division-23 Basic Mechanical Materials and Methods section "Pipes and Pipe Fittings", in accordance with the following listing:

2.4.1 Interior Water Piping:

2.4.1.1 Above Grade: Copper tube; Type L, hard-drawn temper; wrought-copper fittings, solder-joints.

2.4.1.2 Below Grade: Copper tube; Type L, soft-annealed temper; no joints below floor.

2.4.2 Exterior Water Piping:

2.4.2.1 Copper tube; Type L, hard-drawn temper; wrought-copper fittings, solder-joints.

2.4.3 Solder joints shall be made with 95-5 solder.

2.5 Piping Specialties: Provide piping specialties complying with Division-23 Basic Mechanical Materials and Methods section "Piping Specialties".

2.6 Supports and Anchors: Provide supports and anchors complying with Division-23 Basic Mechanical Materials and Methods section "Supports and Anchors".

2.7 Interior Valves: Provide valves complying with Division-23 Basic Mechanical Materials and Methods section "Valves", in accordance with the following listing:

2.7.1 Sectional and Shutoff Valves: GA1, GA2, GA3, BA1, BA2.

2.7.2 Drain Valves: GA1, GA2, BA1, BA2.

2.7.3 Throttling Valves: GL1, GL2, BA1, BA2.

2.7.4 Check Valves: CK1, CK2, CK3.

2.8 Exterior Valves: Provide as indicated, gate valves, AWWA C500, 175 psi working

pressure. Provide threaded, flanged, hub, or other end configurations to suit size of valve and piping connections. Provide inside screw type for use with curb valve box, iron body, bronze-mounted, double disc, parallel seat, non-rising stem. Clow Corp., Dresser Mfg., Fairbanks Co., Kennedy, Stockham.

2.9 Hose Bibbs: Provide rough nickel plated hose bibbs with lock shield compression stop and removable handle, solid flange, female connection with ¾" male threaded hose end, and straight line type non-removable vacuum breaker with ¾" male threaded hose end. Acorn 8121 RCP or equal model by Woodford.

2.10 Non-freeze Wall Hydrants: Provide ¾" anti-syphon, non-freeze wall hydrant with bronze casing, satin bronze box, straight inlet connection, and integral vacuum breaker-backflow preventer, Wade W-8625 or approved equal.

2.11 Water Hammer Arresters: Provide bellows type water hammer arresters, stainless steel casing and bellows, pressure rated for 250 psi, tested and certified in accordance with PDI Standard WH-201. Precision Plumbing Products, Josam, Zurn, Amtrol, Wade, Jay R. Smith, or approved equal.

2.12 Meters and Gauges: Provide meters and gauges complying with Division-23 Basic Mechanical Materials and Methods section "Meters and Gauges", in accordance with the following listing:

Thermometers
Pressure gauges
Calibrated balancing cocks

2.13 Combined Pressure-Temperature Relief Valves: Provide relief valves as indicated, of size and capacity as selected by Installer for proper relieving capacity, in accordance with ASME Boiler and Pressure Vessel Code. Provide bronze body, test lever and thermostat complying with ANSI Z21.22 listing requirements for temperature discharge capacity. Provide temperature relief at 210°F, and pressure relief at 150 psi. Watts, Cash, Zurn, or approved equal.

2.14 Trap Primers: Provide brass trap primers and distribution units to seal floor drains indicated on drawings. Trap primer valves shall be automatic, self contained type with no springs or diaphragms and shall not require adjustment. Trap primer valves shall be the type that can be installed anywhere on cold water piping. Distribution units shall supply 1-4 floor drains. Trap primer valves shall comply with ASSE 1018. Precision Plumbing Products PR-500, or approved equal. Where P-trap primers are indicated use "Prime-Eze" by Jay R. Smith, or approved equal.

2.15 Access Doors: Provide access doors to service all valves and other devices as required in accordance with Division-23 Basic Materials and Methods Section “Access Doors”.

3 EXECUTION

3.1 General: Examine areas and conditions under which potable water systems are to be installed. Do not proceed with work until unsatisfactory conditions have been corrected in manner acceptable to Installer.

3.2 Install plumbing identification in accordance with Division-23 Basic Mechanical Materials and Methods section "Mechanical Identification". Install underground plastic pipe markers

during backfill, 6"-8" below grade.

3.3 Install water distribution piping in accordance with Division-23 Basic Mechanical Materials and Methods section "Pipes and Pipe Fittings".

3.3.1 Install piping with 1/32" per foot (¼%) downward slope towards drain point.

3.3.2 Locate groups of pipes parallel to each other, spaced to permit applying full insulation and servicing of valves.

3.4 Install exterior water piping in compliance with local governing regulations. Water piping shall be installed with a minimum of 30 inches of cover unless otherwise indicated.

3.5 Install piping specialties in accordance with Division-23 Basic Mechanical Materials and Methods section "Piping Specialties".

3.6 Install supports and anchors in accordance with Division-23 Basic Mechanical Materials and Methods section "Supports and Anchors".

3.7 Install valves in accordance with Division-23 Basic Mechanical Materials and Methods section "Valves".

3.7.1 Sectional Valves: Install on each branch and riser, close to main, where branch or riser serves two or more plumbing fixtures or equipment connections, and elsewhere as indicated.

3.7.2 Shutoff Valves: Install on inlet of each plumbing equipment item, and on inlet of each plumbing fixture, and elsewhere as indicated.

3.7.3 Drain Valves: Install on each plumbing equipment item located to completely drain equipment for service or repair. Install at base of each riser, at base of each rise or drop in piping system, and elsewhere where indicated or required to completely drain potable water system.

3.7.4 Check Valves: Install where indicated.

3.7.5 Calibrated Balancing Cocks: Install in each hot water recirculating loop, and elsewhere as indicated.

3.8 Hose Bibbs and Wall Hydrants: Install on concealed piping where indicated with vacuum breaker. Mount 18 inches above grade or finished floor.

3.9 Install pressure regulating valves where indicated. Provide inlet and outlet shutoff valves, and throttling valve bypass. Provide pressure gauge on valve outlet.

3.10 Install meters and gauges in accordance with Division-23 Basic Mechanical Materials and Methods section "Meters and Gauges".

3.11 Install relief valves on each water heater, and where indicated in accordance with the manufacturer's instructions. Pipe full size outside or to floor drain. Cut the end of the pipe at a 45° angle and terminate 6 inches above the floor or grade.

3.12 Piping Runouts to Fixtures: Provide hot and cold water piping runouts to fixtures of sizes

indicated, but in no case smaller than required by Florida Building Code-Plumbing.

3.13 Plumbing Equipment Connections: Connect hot and cold water piping system to plumbing equipment as indicated, and comply with equipment manufacturer's installation instructions. Provide shutoff valve and union for each connection, provide drain valve on drain connection.

3.14 Install water hammer arresters in upright position, in locations and of sizes indicated in accordance with PDI Standard WH-201.

3.15 Install trap primers as indicated, and in accordance with manufacturer's installation instructions. Provide access panels to all trap primers unless accessible through a lay-in ceiling.

3.16 Locate and coordinate installation of access doors for all valves and devices in accordance with Division-23 Basic Mechanical Materials and Methods section “Access Doors”.

3.17 Piping Tests: Test, clean, and sterilize potable water piping in accordance with testing requirements of Division-23 Basic Mechanical Materials and Methods section "Testing, Cleaning, and Sterilization of Piping Systems".

END OF SECTION 22 11 13

THIS PAGE INTENTIONALLY LEFT BLANK

SECTION 22 13 16 - SOIL, WASTE AND VENT SYSTEM

1 GENERAL

1.1 Drawings and general provisions of Contract, including General and Supplementary Conditions and Division-1 Specification sections, apply to work of this section.

1.2 Division-22 Basic Plumbing Requirements and Basic Plumbing Materials and Methods sections apply to work of this section.

1.3 Division-23 Basic Mechanical Materials and Methods Sections apply to work of this section.

1.4 Extent of soil waste and vent systems work is indicated on drawings and schedules, and by requirements of this section.

1.5 Refer to appropriate Division-2 sections for exterior sanitary sewer system required in conjunction with soil and waste systems; not work of this section.

1.6 Insulation for soil and waste systems is specified in other Division-22 sections, and is included as work of this section. Insulation requirements include:

1.6.1 Horizontal above grade waste pipes receiving discharge from ice machines, coolers, freezers or similar units to points of connection receiving waste from 4 or more fixtures.

1.6.2 Horizontal above grade waste pipes receiving condensate from air conditioning equipment to point of connection receiving waste from 4 or more fixtures.

1.7 Excavation and backfill required in conjunction with soil, waste and vent piping is specified in other Division-23 sections and is included as work of this section.

1.8 Code Compliance: Comply with applicable portions of Florida Building Code-Plumbing pertaining to plumbing materials, construction and installation of products. Comply with local utility requirements.

1.9 Approval Submittals:

1.9.1 Product Data: Submit manufacturer's technical product data for:

Cleanouts
Floor drains

1.10 O&M Data Submittals: Submit a copy of all approval submittals.

2 PRODUCTS

2.1 General: Provide piping materials and factory-fabricated piping products of sizes, types, pressure ratings, and capacities as indicated. Where not indicated, provide proper selection as determined by Installer to comply with installation requirements. Provide sizes and types matching piping and equipment connections; provide fittings of materials which match pipe materials used in soil and waste systems. Where more than one type of materials or products is indicated, selection is Installer's option.

Underground-Type Plastic Line Marker: Manufacturer's standard permanent, bright-colored, continuous-printed plastic tape, intended for direct-burial service; not less than 6" wide x 4 mils thick. Provide green tape with black printing reading "CAUTION SEWER LINE BURIED BELOW".

2.2 Acceptable Manufacturers: Subject to compliance with requirements, provide products of one of the following listed for each item.

2.3 Pipes and Fittings: Provide pipes and pipe fittings complying with Division-23 Basic Mechanical Materials and Methods section "Pipes and Pipe Fittings", in accordance with the following listing:

2.3.1 Above Ground Soil, Waste, and Vent Piping:

2.3.1.1 Polyvinyl chloride plastic pipe (PVC); Type DWV; PVC plastic type DWV socket-type fitting, solvent cement joints. Do not use in fire-rated assemblies or return air plenums.

2.3.2 Underground Building Drain Piping (within 5 feet of the building):

2.3.2.1 Pipe Size 6" and Smaller: Polyvinyl chloride sewer pipe (PVC); Type DWV; PVC plastic type DWV socket-type.

2.4 Pipe Specialties: Provide piping specialties complying with Division-23 Basic Materials and Methods section "Piping Specialties".

2.5 Supports and Anchors: Provide supports and anchors complying with Division-23 Basic Mechanical Materials and Methods section "Supports and Anchors".

2.6 Cleanouts: Provide factory-fabricated drainage piping products of size and type indicated. Where not indicated, provide proper selection as determined by Installer to comply with installation requirements and governing regulations. Josam, Jay R. Smith, Wade, Zurn.

2.6.1 Cleanout Plugs: Cast-bronze or brass, threads complying with ANSI B2.1 countersunk head.

2.6.2 Cleanouts for Cast-Iron Piping Systems:

2.6.2.1 Floor Cleanouts: Cast-iron body with adjustable head, brass plug, and scoriated nickel-brass cover. Furnish with carpet flange for carpeted floors. Furnish with recessed cover for tile floors. Furnish with clamping ring for floors with waterproof membrane. Wade W-6000 spigot outlet for Ty-Seal hub, W-6010 inside caulk, or W-6030 hub outlet for push-on as required.

2.6.2.2 Cleanouts in Piping: Cast-iron cleanout ferrule with threaded brass countersunk plug for caulked piping, Wade W-8550-D. For no-hub piping, furnish no-hub ferrule with W-8590-D threaded brass countersunk plug.

2.6.2.3 Wall Cleanouts: Cast-iron ferrule with tapped, countersunk, threaded brass plug. Square 8.75”x8.75” hinged wall access cover, with scoriated nickel bronze finish.

2.6.2.4 Grade Cleanouts: Cast-iron cleanout ferrule with threaded brass countersunk plug. Wade W-

8530-D. In sidewalks and other finished concrete, provide access cover frames with a non-tilting tractor cover. Wade W-7035-Z or equal.

2.6.2.5 Cleanouts in Paved Areas: Cast iron body, adjustable housing, ferrule with plug and round loose scoriated tractor cover. Wade W-8300-MF. Coordinate concrete depth at site with adjustable flange.

2.6.3 Cleanout for PVC Systems:

2.6.3.1 Floor Cleanouts: Cast-iron body with adjustable head, brass plug, and scoriated nick-brass cover. Furnish with carpet flange for carpeted floors. Furnish with recessed cover for tile floors. Furnish with clamping ring for floors with membrane. Wade W-6030 hub outlet for push-on.

2.6.3.2 Cleanouts in Piping: PVC cleanout adaptor with threaded PVC plug.

2.6.3.3 Wall Cleanouts: PVC cleanout adaptor with tapped, countersunk, threaded brass plug. Square 8.75”x8.75” hinged wall access cover, with scoriated nickel bronze finish.

2.6.3.4 Grade Cleanouts: PVC cleanout adaptor with countersunk, threaded brass plug. Wade W-8590-D plug. In sidewalks and other finished concrete, provide access cover frames with a non-tilting tractor cover. Wade W-7035-Z or equal.

2.6.3.5 Cleanouts in Paved Areas: Cast iron body, adjustable housing, ferrule with plug and round loose scoriated tractor cover. Wade W-8300-MF. Coordinate concrete depth at site with adjustable flange.

2.7 Floor Drains: Provide floor drains of size as indicated on drawings; and type, including features, as specified herein. Josam, Jay R. Smith, Wade, Zurn.

2.7.1 Floor Drains: Provide inside caulk bottom outlet or TY-Seal hub outlet with adaptor for cast iron trap installation and a 4" deep trap seal. Provide clamping rings for floors with membrane.

2.7.2 Strainer: Provide 5" satin-nickel bronze strainer.

2.7.3 Trap Primer Connection: Provide ½" trap primer tapping.

2.7.4 Funnel: Provide funnel where shown on the drawings.

2.7.5 Basis of Design: Wade Series 1100.

3 EXECUTION

3.1 Examine substrates and conditions under which soil and waste systems are to be installed. Do not proceed with work until unsatisfactory conditions have been corrected.

3.2 Piping Installation:

3.2.1 Install above grade soil and waste piping in accordance with Division-23 Basic Mechanical Materials and Methods section "Pipes and Pipe Fittings", and with Florida Building Code-Plumbing.

3.2.2 Install underground soil and waste pipes as indicated and in accordance with Florida Building Code-Plumbing. Lay underground piping beginning at low point of systems, true to grades and alignment indicated with unbroken continuity of invert. Place bell ends of piping facing upstream. Install required gaskets in accordance with manufacturer's recommendations for use of lubricants, cements, and other special installation requirements. Clean interior of piping of dirt and other superfluous material as work progresses. Maintain swab or drag in line and pull past each joint as it is completed. Place plugs in ends of uncompleted piping at end of day or whenever work stops.

3.2.3 Install building soil and vent piping pitched to drain at minimum slope of ¼" per foot (2%) for piping smaller than 3", and 1/8" per foot (1%) for piping 3" and larger.

3.3 Install piping specialties in accordance with Division-23 Basic Mechanical Materials and Methods section "Piping Specialties".

3.4 Install supports and anchors in accordance with Division-23 Basic Mechanical Materials and Methods section "Supports and Anchors".

3.5 Installation of Cleanouts: Install in above ground piping and building drain piping as indicated, as required by Florida Building Code-Plumbing; and at each change in direction of piping greater than 45°; at minimum intervals of 50' for piping 4" and smaller and 100' for larger piping; and at base of each vertical soil or waste stack. Install floor and wall cleanout covers for concealed piping, select type to match adjacent building finish.

3.5.1 Size: Cleanouts shall be full size up to 4". Piping over 4" shall have a reducing fitting to accommodate a 4" cleanout unless indicated otherwise on drawings.

3.5.2 Install cleanouts to allow adequate clearance for rodding.

3.5.3 Protect all finished surfaces of cleanouts with a suitable adhesive covering until construction is completed.

3.5.4 Cleanouts to Grade: Provide an 18" x 18" x 8" thick concrete pad around the cleanout. Set the cleanout ferrule, adapter, or access cover frame in the concrete as required. The cleanout shall be extended to the finished grade. The concrete pad shall slope away from the cleanout in all directions approximately one inch. Cover pad with fill to finished grade.

3.5.5 Cleanouts in Paved Areas: Provide concrete pad similar to cleanout to grade and coordinate concrete depth at site with adjustable flange. Access cover frames are required.

3.6 Flashing Flanges: Install flashing flange and clamping device with each stack and cleanout passing through waterproof membranes.

3.7 Vent Flashing Sleeves: Install on stack passing through roof, secure to stack flashing in accordance with manufacturer’s instructions. For metal roofs, sleeves and flashing are by Division-7.

3.8 Installation of Floor Drains: Install floor drains in accordance with manufacturer's written instructions and in locations indicated.

3.8.1 Coordinate flashing work with work of waterproofing and adjoining substrate work.

3.8.2 Install floor drains at low points of surface areas to be drained, or as indicated. Set tops of drains flush with finished floor.

3.8.3 Install drain flashing collar or flange so that no leakage occurs between drain and adjoining flooring. Maintain integrity of waterproof membranes, where penetrated.

3.8.4 Position drains so that they are accessible and easy to maintain.

3.9 Connection of Trap Primers: Connect trap primers as indicated, and in accordance with manufacturer's installation instructions. Pitch piping towards drain trap, minimum of 1/8" per foot (1%). Adjust trap primer for proper flow.

3.10 Piping Runouts to Fixtures: Provide soil and waste piping runouts to plumbing fixtures and drains, with approved trap, of sizes indicated, but in no case smaller than required by Florida Building Code-Plumbing.

3.11 Test, clean, flush, and inspect soil and waste piping in accordance with requirements of Division-23 Basic Mechanical Materials and Methods section "Testing, Cleaning and Sterilization of Piping Systems".

END OF SECTION 22 13 16

THIS PAGE INTENTIONALLY LEFT BLANK

SECTION 22 30 00 - PLUMBING FIXTURES, EQUIPMENT, TRIM & SCHEDULE

1 GENERAL

1.1 Drawings and general provisions of Contract, including General and Supplementary Conditions and Division-1 Specification sections, apply to work of this section.

1.2 Division-22 Basic Plumbing Requirements and Basic Plumbing Materials and Methods sections apply to work of this section.

1.3 Divison-23 Basic Mechanical Materials and Methods sections apply to work of this section.

1.4 Extent of plumbing fixtures work required by this section is indicated on drawings and schedules, and by requirements of this section.

1.5 Refer to Division-26 sections for field-installed electrical wiring required for plumbing fixtures; not work of this section.

1.6 Codes and Standards:

1.6.1 Plumbing Fixture Standards: Comply with applicable portions of Florida Building Code-Plumbing pertaining to materials and installation of plumbing fixtures.

1.6.2 ANSI Standards: Comply with applicable ANSI standards pertaining to plumbing fixtures and systems.

1.6.3 PDI Compliance: Comply with standards established by PDI pertaining to plumbing fixture supports.

1.6.4 UL Listing: Construct plumbing fixtures requiring electrical power in accordance with UL standards and provide UL-listing and label.

1.6.5 ARI Compliance: Construct and install water coolers in accordance with ARI Standard 1010 "Drinking-Fountains and Self-Contained Mechanically-Refrigerated Drinking-Water Coolers", and provide Certification Symbol.

1.6.6 ANSI Compliance: Construct and install barrier-free plumbing fixtures in accordance with ANSI Standard A117.1 "Specifications for Making Buildings and Facilities Accessible To and Usable By Physically Handicapped People".

1.7 Approval Submittals:

1.7.1 Product Data: Submit manufacturer's technical product data, including rated capacities of selected model clearly indicated, furnished specialties and accessories; and installation instructions. Submit manufacturer's assembly-type drawings indicating dimensions, roughing-in requirements, required clearances, and methods of assembly of components and anchorages. The submittal shall be organized by “fixture number” and each fixture package shall be so identified. Each fixture package shall include all of the required fitting and trim, even if such devices are used for more than one fixture.

1.8 O&M Data Submittals: Submit a copy of approval submittals. Submit maintenance data and parts lists for each type of plumbing fixture and accessory; including "trouble-shooting"

maintenance guide. Include these data in O&M manual.

1.9 Handle plumbing fixtures carefully to prevent breakage, chipping and scoring fixture finish. Do not install damaged plumbing fixtures; replace and return damaged units to equipment manufacturer.

2 PRODUCTS

2.1 General: Provide factory-fabricated fixtures of type, style and material indicated. For each type fixture, provide trim, carrier, seats, and valves as specified. Where not specified, provide products as recommended by manufacturer, and as required for complete installation. Where more than one type is indicated, selection is Installer's option; but, all fixtures of same type must be furnished by single manufacturer. Where type is not otherwise indicated, provide fixtures complying with governing regulations.

2.2 Model Numbers: Basis of design model numbers of a particular manufacturer are listed in the fixture schedule as an aid to contractors. Where conflicts between the model number and the written description occur, the written description shall govern. Where acceptable manufacturers are listed, products are subject to compliance with requirements.

2.3 Refer to plumbing construction documents for fixture specifications.

2.4 Materials:

2.4.1 Provide materials which have been selected for their surface flatness and smoothness. Exposed surfaces which exhibit pitting seam marks, roller marks, foundry sand holes, stains, decoloration, or other surface imperfections on finished units are not acceptable.

2.4.2 All fixtures shall be white vitreous china unless otherwise specifically noted. Where enameled iron fixtures are specified, they shall be furnished with acid resisting enamel.

2.4.3 Where fittings, trim and accessories are exposed or semi-exposed provide bright chrome-plated or polished stainless steel units. Provide copper or brass where not exposed.

2.4.4 Stainless Steel Sheets: ASTM A 167, Type 302/304, hardest workable temper. Finish shall be No. 4, bright, directional polish on exposed surfaces.

2.4.5 Vitreous China: High quality, free from fire cracks, spots, blisters, pinholes and specks; glaze exposed surfaces, and test for crazing resistance in accordance with ASTM C 554.

2.4.6 Synthetic Stone: High quality, free from defects, glaze on exposed surfaces, stain resistant.

2.5 Plumbing Fittings, Trim and Accessories:

2.5.1 Faucets: At locations where water is supplied (by manual, automatic or remote control), provide commercial quality chrome-plated, cast-brass faucets, valves, or other dispensing devices, of type and size indicated, and as required to operate as indicated.

2.5.1.1 Automatic Faucets: Provide electronic sensor-operated faucets with 0.5 gpm vandal-resistant spray head. Set volume adjustment at 0.25 gallons per operation. Provide box-mounted, hard-wired transformer (120 VAC primary - 24 VAC secondary) with each faucet.

All wiring and electrical connections shall be provided by Division - 26.

2.5.1.2 Aerators: Provide aerators of types approved by Health Department having jurisdiction.

2.5.1.3 Acceptable Manufacturers: Subject to compliance with requirements, provide products of one of the following for each item. American Standard, Chicago Faucet Co., Kohler Co., Speakman Co., T & S Brass and Bronze Works, Water Saver Faucet Co.

2.5.2 Stops: Provide chrome-plated brass, angle type, manual shutoff valves and d" chrome-plated flexible supply pipes to permit fixture servicing without shutdown of water supply piping systems for all fixtures. Coordinate with fixture requirements.

2.5.2.1 Provide loose key stops.

2.5.2.2 Provide standard stops.

2.5.2.3 Acceptable Manufacturers: Subject to compliance with requirements, provide products of one of the following for each item. Zurn or approved equal.

2.5.3 Waste Outlets: Provide removable P-traps, drains, waste arms, tailpieces and wastes-to-wall where drains are indicated for direct connection to drainage system for all fixtures unless otherwise noted. Provide drains, tailpieces and waste arms where indirect drains are indicated. Waste outlets shall be full size of fixture drain connection.

2.5.3.1 Provide chrome-plated cast-brass P-traps and drains with cleanout.

2.5.3.2 P-traps, wastes and drains of all types shall be 17-gauge.

2.5.3.3 Acceptable Manufacturers: Subject to compliance with requirements, provide products of one of the following for each item. Zurn, or approved equal.

2.5.4 Flush Valves: Provide quiet-flush, chrome-plated, cast-brass flush valves with vacuum breaker and screwdriver stop. Where handicap service is indicated, provide ADA compliant handles with the handle on the wide side of the stall.

2.5.4.1 Automatic Flush Valves: Provide self-adaptive, electronic, infrared-sensor operated flush valves with 24 volt solenoid operator and override button. Provide a box-mounted, hard-wired transformer (120 VAC primary - 24 VAC secondary) with each flush valve. Provide matching wall cover plates each with four vandal-resistant screws. All wiring and electrical connections shall be provided by Division - 26.

2.5.4.2 Acceptable Manufacturers: Subject to compliance with requirements, provide products of one of the following for each item. Sloan Valve Co. or Zurn.

2.5.5 Carriers: Provide cast-iron supports for fixtures of either graphitic gray iron, ductile iron, or malleable iron or steel as indicated. Coordinate with specific fixture requirements and conditions of the project.

2.5.5.1 Acceptable Manufacturers: Subject to compliance with requirements, provide products of one of the following for each item. Josam, Wade, Zurn, J.R. Smith.

2.5.6 Fixture Bolt Caps: Provide manufacturer's standard exposed fixture bolt caps finished to

match fixture finish.

2.5.7 Escutcheons: Where fixture supplies and drains penetrate walls in exposed locations, provide chrome-plated brass escutcheons with friction clips.

2.5.8 Comply with additional fixture requirements listed for each fixture and as required for a complete and functional system.

2.6 Water Closets:

2.6.1 General: Provide white china siphon jet type unless otherwise noted.

2.6.1.1 Acceptable Manufacturers: Subject to compliance with requirements, provide products of one of the following for each item. American Standard, Crane, Kohler, or Zurn.

2.6.2 Fixture Seats: Provide white, heavy molded plastic fixture seats with stainless steel self-sustaining check hinges.

2.6.2.1 Acceptable Manufacturers: Subject to compliance with requirements, provide products of one of the following for each item. Bemis Mfg. Co., Beneke Corp., Church or Comfort Seats.

2.7 Urinals:

2.7.1 General: Provide white china siphon jet wall hung type with ¾" top spud and 2" outlet unless otherwise noted. Provide short foot carrier with top and bottom hanger plates.

2.7.2 Acceptable Manufacturers: Subject to compliance with requirements, provide products of one of the following for each item. American Standard, Crane, Kohler, or Zurn.

2.8 Lavatories:

2.8.1 General: Provide white china lavatories.

2.8.2 Acceptable Manufacturers: Subject to compliance with requirements, provide products of one of the following for each item. American Standard, Crane, Kohler, or Zurn.

2.9 Electric Water Coolers:

2.9.1 General: Provide self-contained electric water cooler with entire water system free of lead. All joints shall be made using silver solder. Units shall be complete with an air-cooled refrigeration system consisting of a hermetic compressor, cooler, pre-cooler, condenser fan, thermostat safety controls and all other related devices. The unit shall have a capacity of 8 gallons per hour. The cabinet shall be stainless steel with vermin proof insulation. The top shall be fabricated of stainless steel with a No. 4 finish. Provide sensor, operator, transformer and all related controls for fully automatic operation. Where handicap units are indicated, the bubbler and fountain shall be ADA compliant.

2.9.2 Acceptable Manufacturers: Subject to compliance with requirements, provide products of one of the following for each item. Elkay Mfg. Co., Halsey Taylor Div., Haws Drinking Faucet Co., Sunroc, Oasis.

2.10 Mop Receptors:

2.10.1 General: Provide one piece mop receptors with 3" integral stainless steel grid drain. Provide wall-mounted faucet with arm handles, vacuum breaker, stops, hose connection and hose bracket. Provide 30" hose.

2.10.2 Acceptable Manufacturers: Subject to compliance with requirements, provide products of one of the following for each item. Stern-Williams Co., or Acorn.

2.11 Stainless Steel Sinks:

2.11.1 General: Provide Type 304, 18 gauge self-rimming stainless steel back ledge with No. 4 finish . Provide sound deadening material on the sides and bottom of the sink. Provide grid drain or strainer with removable crumb cup and stopper as indicated.

2.11.2 Acceptable Manufacturers: Subject to compliance with requirements, provide products of one of the following for each item. Elkay, Just

2.12 Showers:

2.12.1 General:

2.12.2 Acceptable Manufacturers: Subject to compliance with requirements, provide products of one of the following for each item. Leonard Valve Co., MCC Powers Process Controls, Symmons, Speakman Co.

2.13 Water Heaters:

2.13.1 Electric Water Heaters: See Fixture Schedule on Drawings

2.13.2 Accessories: VB, relief, pan, stand, etc.

2.13.3 Acceptable Manufacturers: Subject to compliance with requirements, provide products of one of the following for each item. Ruud, Rheem, Mor-Flo, State, A.O. Smith.

2.14 Thermostatic Mixing Valves:

2.14.1 General:

2.14.2 Acceptable Manufacturers: Subject to compliance with requirements, provide products of one of the following for each item. Zurn, Watts, or approved equal.

3 EXECUTION

3.1 Examine roughing-in work of potable water and waste piping systems to verify actual locations of piping connections prior to installing fixtures. Also examine floors and substrates, and conditions under which fixture work is to be accomplished. Correct any incorrect locations of piping, and other unsatisfactory conditions for installation of plumbing fixtures. Do not proceed with work until unsatisfactory conditions have been corrected in manner acceptable to Installer.

3.2 Install plumbing fixtures of types indicated where shown and at indicated heights. Install in

accordance with fixture manufacturer's written instructions, roughing-in drawings, and with recognized industry practices. Install in accordance with ADA and applicable handicap code requirements. Ensure that plumbing fixtures comply with requirements and serve intended purposes. Comply with applicable requirements of Florida Building Code-Plumbing pertaining to installation of plumbing fixtures. Furnish templates for cut-outs in countertops. Coordinate exact fixture locations with countertop shop drawings.

3.3 Fasten plumbing fixtures securely to indicated supports or building structure; and ensure that fixtures are level and plumb. Secure plumbing supplies behind or within wall construction so as to be rigid, and not subject to pull or push movement. Mount at heights shown on the drawings. Fixture heights are floor-to-rim distance. Fitting heights are to centerline.

3.4 Install stop valve in water supply to each fixture.

3.5 After fixtures are set, the crack between the fixture and wall shall be caulked with DAP silicone-based caulking, or approved equal.

3.6 Protect installed fixtures from damage during remainder of construction period.

3.7 Upon completion of installation of plumbing fixtures and after units are water pressurized, test fixtures to demonstrate capability and compliance with requirements. When possible, correct malfunctioning units at site, then retest to demonstrate compliance; otherwise, remove and replace with new units and proceed with retesting.

3.8 Inspect each installed unit for damage to finish. If feasible, restore and match finish to original at site; otherwise, remove fixture and replace with new unit. Feasibility and match to be judged by Architect/Engineer. Remove cracked or dented units and replace with new units.

3.9 Clean plumbing fixtures, trim, aerators, and strainers of dirt and debris upon completion of installation.

3.10 Adjust water pressure at drinking fountains, faucets, shower valves, and flush valves to provide proper flow stream and specified gpm.

3.11 Adjust or replace washers to prevent leaks at faucets and stops.

END OF SECTION 22 30 00

SECTION 22 62 00 - MEDICAL VACUUM SYSTEM

1 GENERAL

1.1 Drawings and general provisions of Contract, including General and Supplementary Conditions and Division-1 Specification sections, apply to work of this section.

1.2 Division-15 Basic Materials and Methods sections apply to work of this section.

1.3 This section refers to medical vacuum systems only.

1.4 Refer to Division-16 sections for the following work; not work of this section.

1.4.1 Power supply wiring from power source to power connection on vacuum producers and other devices. Include disconnects, and required electrical devices, except where specified as furnished, or factory installed, by manufacturer.

1.5 Provide the following as part of this section's work, complying with the requirements of Division 16.

1.5.1 Alarm and signal wiring.

1.6 Codes and Standards: Provide systems and components which are listed by Underwriters Laboratories and comply with NFPA-99.

1.7 Approval Submittals:

M

1.7.1 Product Data: Submit manufacturer's specifications, drawings, installation and start-up instructions, and performance data for the following:

Vacuum producers
Valves
Zone valve boxes
Alarm panels
Alarm system devices
Access doors

1.8 Test Reports and Verification Submittals:

1.8.1 Submit brazer's certificate.

1.8.2 Certifications: Submit certificate by medical vacuum equipment supplier that all cross-connection tests, pressure tests, cleaning, purging, purity tests, equipment tests, operational tests, outlet tests and alarm tests have been completed and are satisfactory.

1.9 O&M Data Submittals:

1.9.1 Wiring Diagrams: Submit manufacturer's electrical requirements for wiring to vacuum producers and alarm system. Submit manufacturer's ladder-type wiring diagrams for interlock and control wiring. Submit wiring diagrams for alarm panels. Clearly differentiate between portions of wiring that are factory-installed and portions to be field-installed.

1.9.2 Maintenance Data: Submit a copy of approval submittals and maintenance data and parts lists for each vacuum producer, control, alarm panel, and accessory; including "trouble-shooting" maintenance guide. Include this data, product data, and wiring diagrams in O&M manual.

2 PRODUCTS

2.1 General: Provide equipment, piping materials, and factory-fabricated piping products of types, sizes, pressure ratings, temperature ratings, and capacities indicated. Where not indicated, provide proper selection as determined by Installer to comply with the installation requirements. Provide materials and products complying with NFPA-99. Provide sizes and types of pipe and equipment to match existing pipe and materials to the extent possible.

2.2 Acceptable Manufacturers: Subject to compliance with requirements, provide products manufactured by or approved equal.

2.3 Piping: Provide hard drawn, seamless, Type L copper tubing complying with ASTM B88. Provide brazed copper fittings or threaded fittings as indicated. Provide brazing materials per ANSI A5.8. Use brazing filler alloy or solder with a melting point of 450°F or greater.

2.4 Valves: Provide quarter turn, bolted union ball shutoff valves constructed of brass or bronze, solder type. Ball seats shall be constructed of Buna-N or Teflon and shall wipe the ball clean on each operation. Provide blowout-proof stem. Valves shall be cleaned for oxygen service and capped. Valve handles shall be labeled for vacuum service.

2.5 Zone Valve Boxes: Provide extruded aluminum recessed valve boxes with plaster frames, label holders and labels identifying vacuum, concealed mounting screws, and tinted, transparent, frangible window with pull ring. Valve boxes shall contain the quantity and type valves for vacuum and gases as shown on the drawings. Valve boxes shall house valves and 1-1/2" line vacuum gauges.

2.6 Vacuum Service Outlets: Provide recessed vacuum service outlets manufactured per NFPA standards. Outlets shall be of modular design. Provide outlets that are factory tested leak free, cleaned and tested, with vacuum specific, non-interchangeable parts. Outlets shall be labeled. Provide brushed stainless steel finish plate and chrome-plated cover plate. Provide wall/headboard or ceiling outlets as required. For ceiling outlets, provide color-coded conductive hose assemblies and retractor kits. Construct hoses of neoprene able to withstand 200 psi. Terminate hose bottom ends with appropriate hex nut and gland connection. Hose shall extend to 6'-4" above finished floor. Terminate hose with safety-keyed check unit or "Hand-I-Twist" check unit. Coordinate with medical gas service outlets.

2.7 Alarm Panels: Provide modular alarm panels with audible and noncancellable visual alarms with pressure gauges. Provide a closed-circuit, self-monitoring alarm system with provisions for testing. Construct roughing-in box of extruded aluminum with plaster frame. Provide chrome-plated and painted cover. Power supply shall be 120 VAC. Provide master and area alarm panels as shown on the drawings. Alarms shall include:

Oxygen Line Pressure Low
Oxygen Line Pressure High
Oxygen Liquid Level Low - Reorder

Oxygen Emergency Reserve Low
Nitrogen Line Pressure Low
Nitrogen Line Pressure High
Nitrogen Reserve Supply In Use
Vacuum Line Vacuum Below Normal
Nitrous Oxide Line Pressure Low
Nitrous Oxide Line Pressure High
Nitrous Oxide Reserve Supply In Use
Air Line Pressure High
Air Line Pressure Low
Air Dryer Dewpoint Alarm

2.8 Alarm System Devices

2.8.1 Vacuum Switch: Provide SPDT, snap action switch cleaned per NFPA-99 with electrical terminals. Rate switches for 5 amps at 240 VAC. Switches shall be tested at 30 in. Hg. vacuum. Switches shall be adjustable with external dials over a range of 30 in. Hg. to 10 psi. Provide NEMA-1 housing.

2.8.2 Vacuum Gauges: Provide 1-1/2" diameter gauges with 1/4" NPT threaded connector. Calibration shall be 0-30 in. Hg.

2.8.3 Orifice Nipples: Provide brass orifice nipples for vacuum switches with 1/4" NPT male threads at each end.

2.9 Medical Vacuum Producers: Provide factory-tested, continuous duty rated, base-mounted, packaged, duplex medical vacuum producer assembly that requires only air intake, air discharge, and one electrical connection. Basis of Design: or approved equal meeting NFPA-99 with the following features:

2.9.1 Motors: ODP. High efficiency per Division-15 section “Motors”.

2.9.2 Starter: UL-listed, duplex system in NEMA-12 cabinet with circuit breakers, magnetic starters, overloads, HOA switches, hour meters, and timer/alternator to cycle vacuum producers at timed intervals.

2.9.3 Vacuum Pumps: Belt-drive, reciprocating, single stage, single acting, air cooled, with unloaders and Teflon piston and rider rings. Provide 24-month warranty. The system shall not require cooling water.

2.9.4 Safety Devices: Provide thermal overload protection with alarm to master panel for each vacuum producer.

2.9.5 Package Piping: Type K or L copper tubing with brazed joints per NFPA-99. Provide vacuum pump isolation valves on suction and discharge. Provide in-line, canister type filter/silencer on suction. Provide check valve, pressure relief valve and isolation ball valve on each discharge manifold.

2.9.6 Maintenance: Provide service by the supplier available at any time with 24 hour guaranteed response time.

2.9.7 Cabinet: Provide removable sound attenuating cabinet that provides for system cooling.

Maximum 75 dB(A).

2.9.8 Air Receiver: Provide ASME code stamped, National Board registered receiver with pressure relief valve, drain, pressure gauge, and automatic drain trap.

2.9.9 Provide discharge muffler.

2.9.10 Provide piping specialties, supports and anchors, complying with other Division-15 sections.

2.10 Vibration Isolation: Provide vibration isolation complying with Division-15 Basic Materials and Methods section “Vibration Isolation”, and in accordance with the following listing:

2.10.1 Vacuum Pump Mounting: EM5.

2.10.2 Vacuum Pump Suction and Discharge Piping: PF5.

2.11 Access Doors: Provide access doors to service all valves and other devices as required in accordance with Division-15 Basic Materials and Methods Section “Access Doors”.

3 EXECUTION

3.1 Install piping, pipe fittings, piping specialties, valves, gauges and supports and anchors complying with other Division-15 sections as modified herein.

3.2 Install underground piping in duct or casing. Install piping in combustible partitions in conduit. Firestop all piping.

3.3 All joints in concealed piping shall be soldered or brazed. Flared or compression fittings are allowed only on tubing 1/2" and smaller that is visible in rooms. All threaded joints shall be tinned with soft solder. Tube bends 45° or less shall be made with bending tools. Tube bends over 45° shall be made with fittings.

3.4 Individually support piping as follows:

Smaller than 1/2"	6' on center horizontal
3/4" to 1"	8' on center horizontal
1-1/4" and larger	10' on center horizontal
All piping	at each floor vertical

3.5 Install service valves in main, at base of risers and where shown on the drawings. Label service valves and lock open.

3.6 Clean all piping, fittings, and components free of oil, grease, and other materials. Do not use carbon tetrachloride.

3.7 Label all vacuum piping prior to installation.

3.8 Wash the outside of all tubing, joints, and fittings with hot water.

3.9 Locate groups of pipes parallel to each other, spaced to permit servicing valves. All branches and outlets shall be taken from the top of the main.

3.10 Locate and coordinate installation of access doors for all valves and devices in accordance with Division-15 Basic Mechanical Materials and Methods section “Access Doors”.

3.11 Install vacuum producer on reinforced concrete base. Set and level unit on vibration isolators. Install flexible connectors and all accessories. Install and start units in accordance with manufacturer's instructions. Pipe drains to nearest floor drain with copper tubing.

3.12 Provide startup service for vacuum producers.

3.13 Install all alarm panels, vacuum switches, gauges, valves, zone valve boxes, outlets, and other devices per NFPA-99 and the manufacturer's instructions.

3.14 Check entire system for correctness of operation, installation, control sequencing, and alignment. Start all components in proper sequence. Make adjustments required to insure proper smooth quiet operation.

3.15 Performance Criteria and Testing:

3.15.1 Perform cross-connection test per NFPA-99 to verify no cross-connections exist to any other system.

3.15.2 Verify labeling at station outlets, valves, and panels.

3.15.3 After piping is installed (but before installing station outlets, gauges, vacuum switches, and vacuum pumps) blow the system clear with nitrogen or oil-free dry air.

3.15.4 Pressure test to 150 psi with nitrogen or oil-free dry air before closing walls. Test vacuum system individually.

3.15.5 Install all components except vacuum pump, then test at 60 psi for 24 hours.

3.15.6 Test each terminal outlet for 3 cfm of flow at 12 in. Hg.

3.15.7 Perform vacuum drop test on each section of the system. Test fails if vacuum drops greater than 1.5 in. Hg./hr at 12 in. Hg.

3.15.8 Test vacuum producers and accessories.

3.15.9 Test all alarms - master and area.

3.15.10 Set vacuum producers to maintain 12 in. Hg. at the most remote terminal.

3.16 Notify Architect/Engineer, Owner, and Contractor of all tests one week in advance so tests can be witnessed.

3.17 A qualified representative of the medical vacuum equipment supplier shall inspect the entire installation, perform startup services, witness all tests, check all outlets and alarms, and certify in writing that the system is installed correctly. Furnish three copies of the certification letter to the Architect/Engineer prior to final inspection.

END OF SECTION

THIS PAGE INTENTIONALLY LEFT BLANK

SECTION 22 63 00 - MEDICAL GAS SYSTEMS

1 GENERAL

1.1 Drawings and general provisions of Contract, including General and Supplementary Conditions and Division-1 Specification sections, apply to work of this section.

1.2 Division-15 Basic Materials and Methods sections apply to work of this section.

1.3 This section refers to medical gases including:

Oxygen
Nitrogen
Nitrous Oxide
Air

1.4 Refer to Division-16 sections for the following work; not work of this section.

1.4.1 Power supply wiring from power source to power connection on air compressors and other devices. Include disconnects, and required electrical devices, except where specified as furnished, or factory installed, by manufacturer.

1.5 Provide the following as part of this section's work, complying with the requirements of Division 16.

1.5.1 Alarm and signal wiring.

1.6 Codes and Standards: Provide systems and components which are listed by Underwriters Laboratories and comply with NFPA-99. All components and materials used in systems for oxygen and nitrous oxide shall be oxygen compatible.

1.7 Approval Submittals:

1.7.1 Product Data: Submit manufacturer's technical product and performance data for the following:

Valves
Zone valve boxes
Gas service outlets
Cylinders
Alarm panels
Nitrogen pressure control cabinets
Alarm system devices
Medical air accessories
Access doors

1.8 Test Reports and Verification Submittals:

1.8.1 Submit brazer’s certificates.

1.8.2 Certifications: Submit certificate by medical gas equipment supplier that all cross-

connection tests, pressure tests, cleaning, purging, purity tests, equipment tests, operational tests, outlet tests and alarm tests have been completed and are satisfactory.

1.9 O&M Data Submittals:

1.9.1 Wiring Diagrams: Submit manufacturer's electrical requirements for wiring to air compressors and alarm systems. Submit manufacturer's ladder-type wiring diagrams for interlock and control wiring. Submit wiring diagrams for alarm panels. Clearly differentiate between portions of wiring that are factory-installed and portions to be field-installed.

1.9.2 Maintenance Data: Submit a copy of approval submittals. Submit maintenance data and parts lists for each control, alarm panel, and accessory ; including "trouble-shooting" maintenance guide. Include these data and wiring diagrams in O&M manual.

2 PRODUCTS

2.1 General: Provide equipment, piping materials, and factory-fabricated piping products of types, sizes, pressure ratings, temperature ratings, and capacities indicated. Where not indicated, provide proper selection as determined by Installer to comply with the installation requirements. Provide materials and products complying with NFPA-99. Provide sizes and types of pipe and equipment to match existing pipe and materials to the extent possible.

2.2 Acceptable Manufacturers: Subject to compliance with requirements, provide products manufactured by or approved equal.

2.3 Piping: Provide hard drawn, seamless, Type L copper tubing complying with ASTM B88. Tubing shall be delivered to the jobsite cleaned and capped for oxygen service per NFPA-99. Provide brazed copper fittings or threaded fittings as indicated. Provide brazing materials per ANSI A5.8. Use copper-phosphorous brazing filler alloy (BCuP) without flux, with a melting point of 1000°F or greater.

2.4 Valves: Provide quarter turn, bolted union ball shutoff valves constructed of brass or bronze, solder type. Ball seats shall be constructed of Buna-N or Teflon and shall wipe the ball clean on each operation. Provide blowout-proof stem. Valves shall be cleaned for oxygen service and capped. Valve handles shall be labeled for gas service.

2.5 Zone Valve Boxes: Provide extruded aluminum recessed valve boxes with plaster frames, label holders and labels identifying gases, concealed mounting screws, and tinted, transparent, frangible window with pull ring. Valve boxes shall contain the quantity and type valves for gases as shown on the drawings. Valve boxes shall house valves and 1½" line pressure gauges.

2.6 Gas Service Outlets: Provide recessed gas service outlets manufactured per NFPA and CGA standards. Outlets shall be of modular design. Provide outlets that are factory tested leak free, cleaned and tested for oxygen service, and with gas specific, non-interchangeable parts. Outlets shall identify type of gas. Provide primary valve and secondary check. Provide brushed stainless steel finish plate and chrome-plated cover plate. Provide wall/headboard or ceiling outlets as required. For ceiling outlets, provide color-coded conductive hose assemblies and retractor kits. Construct hoses of neoprene able to withstand 200 psi. Terminate hose bottom ends with appropriate hex nut and gland connection. Hose shall extend to 6'-4" above finished floor. Terminate hose with safety-keyed check unit or "Hand-I-Twist" check unit.

2.7 Cylinders: Provide cylinders constructed and tested per DOT specifications and labeled per ANSI Z48.1. Number of cylinders is shown on the drawings. Provide racks and fasteners. Provide cylinder manifolds, cylinder pressure relief valves, pressure switches, gauges, cylinder check valves, isolation valves, pressure regulators and automatic changeover controls as required. Cylinder valve outlets, manifold, and regulator inlets shall comply with ANSI B57.1 and shall insure noninterchangeability. Pressure relief valves shall be constructed of bronze or brass designed especially for gas service. Set relief valves at 150% of normal line pressure, except for nitrogen if used for tools, etc. (set at 150% or 200 psi, whichever is lower). Provide cylinder connection pig tails of copper tubing with brazed fittings.

2.8 Alarm Panels: Provide modular alarm panels with audible and noncancellable visual alarms with pressure gauges. Provide a closed-circuit, self-monitoring alarm system with provisions for testing. Construct roughing-in box of extruded aluminum with plaster frame. Provide chrome-plated and painted cover. Power supply shall be 120 VAC. Provide master and area alarm panels as shown on the drawings. Alarms shall include:

Oxygen Line Pressure Low
Oxygen Line Pressure High
Oxygen Liquid Level Low - Reorder
Oxygen Emergency Reserve Low
Nitrogen Line Pressure Low
Nitrogen Line Pressure High
Nitrogen Reserve Supply In Use
Vacuum Line Vacuum Below Normal
Nitrous Oxide Line Pressure Low
Nitrous Oxide Line Pressure High
Nitrous Oxide Reserve Supply In Use
Air Line Pressure High
Air Line Pressure Low
Air Dryer Dewpoint Alarm

2.9 Recessed Nitrogen Pressure Control Cabinets: Provide recessed nitrogen pressure control cabinets with prime-painted steel backbox with mounting flanges and anchoring provisions. Cabinets shall contain a line-pressure control regulator, two pressure gauges (supply and outlet), nitrogen service outlet and supply valve. The coverplate shall be stainless steel with control identifications and pressure control and supply valve knobs.

2.10 Alarm System Devices

2.10.1 High-Low Pressure Switch (for oxygen, nitrous oxide, air): Provide dual circuit, SPDT, snap action switch cleaned per NFPA-99, pre-wired with six 18" lengths of color-coded wire. Rate switches for 10 amps at 120 VAC. Switches shall be tested for 180 psi. Switches shall be adjustable with external calibrated dials and tamper-proof cover. Provide NEMA-4 housing.

2.10.2 High-Low Pressure Switch (Nitrogen): Provide dual circuit, SPDT, snap action switch cleaned per NFPA-99 with electrical terminals. Rate switches for 5 amps at 240 VAC. Switches shall be tested for 900 psi. Switches shall be adjustable with external calibrated dials. Provide NEMA-1 housing.

2.10.3 Pressure Gauges: Provide 1½" diameter gauges with 2/3" MNPT threaded, center back connector. Calibration shall be 0-100 psi, except for nitrogen service, which shall be 0-400 psi.

2.10.4 Orifice Nipples: Provide brass orifice nipples for pressure switches with ¼" NPT male threads at each end.

2.11 Access Doors: Provide access doors to service all valves and other devices as required in accordance with Division-15 Basic Materials and Methods Section "Access Doors".

3 EXECUTION

3.1 Install piping, pipe fittings, piping specialties, valves, gauges and supports and anchors complying with other Division-15 sections as modified herein.

3.2 Install piping that is in combustible partitions in conduit. Firestop all piping.

3.3 All joints in concealed piping shall be brazed. Flared or compression fittings are allowed only on tubing ½" and smaller that is visible in rooms. All threaded joints shall be tinned with soft solder. Tube bends 45° or less shall be made with bending tools. Tube bends over 45° shall be made with fittings.

3.4 Individually support piping as follows:

Smaller than ½"	6' on center horizontal
¾" to 1"	8' on center horizontal
1¼" and larger	10' on center horizontal
All piping	at each floor vertical

3.5 Install service valves in main, at base of riser and where shown on the drawings. Label service valves and lock open.

3.6 Locate and coordinate installation of access doors for all valves and devices in accordance with Division-15 Basic Mechanical Materials and Methods section "Access Doors".

3.7 Clean all piping, fittings, and components free of oil, grease, and other oxidizable materials as if for oxygen service. Do not use carbon tetrachloride. Clean per CGA Pamphlet G-4.1 "Cleaning Equipment for Oxygen Service". Deliver all tubing to the jobsite cleaned and capped. Inspect prior to use. All components requiring cleaning at the jobsite shall be cleaned by washing in a hot alkaline cleaner-water solution, scrubbed, then rinsed in clean, hot water.

3.8 Purge with nitrogen during brazing.

3.9 Wash the outside of all tubing, joints, and fittings with hot water.

3.10 Install tubing to station outlets as follows in accordance with NFPA 99

3.11 Locate groups of pipes parallel to each other, spaced to permit servicing valves. All branches and outlets shall be taken from the top of the main.

3.12 Install air compressor on reinforced concrete base. Set and level unit on vibration isolation pads. Install flexible connectors and all accessories. Install and start units in accordance with manufacturer's instructions. Pipe drains to nearest floor drain with copper tubing.

3.13 Provide startup service for air compressors. Verify air quality test on startup and after 24 hours of operation.

3.14 Install all alarm panels, pressure switches, gauges, valves, zone valve boxes, outlets, cylinders, and other devices per NFPA-99 and the manufacturer's instructions.

3.15 Check entire system for correctness of operation, installation, control sequencing, and alignment. Start all components in proper sequence. Make adjustments required to insure proper smooth quiet operation.

3.16 Performance Criteria and Testing

3.16.1 Perform cross-connection test per NFPA-99 to verify no cross-connections exist to any other system.

3.16.2 Verify labeling at station outlets, valves, and panels.

3.16.3 After piping is installed (but before installing station outlets, gauges, pressure switches, manifolds, and reliefs) blow the system clear with nitrogen or oil-free dry air.

3.16.4 Pressure test to 150 psi with nitrogen or oil-free dry air before closing walls. Test gas systems individually.

3.16.5 Install all components then test at 120% of normal operating pressure for 24 hours.

3.16.6 Purge the system with the proper gas progressively through all outlets at 100 l/min until a white cloth shows no discoloration.

3.16.7 Test each outlet with oxygen or other gas to confirm the desired percentage of oxygen or the proper gas.

3.16.8 Test changeover and reserve signals for all cylinders.

3.16.9 Test pressure relief valves.

3.16.10 Test air compressors and accessories.

3.16.11 Perform purity test for air quality.

3.16.12 Test all alarms - master and area.

3.16.13 Set central gas supplies to maintain 50-55 psi, except nitrogen. Set nitrogen central supplies to maintain 160 psi at the outlets.

3.17 Notify Architect/Engineer, Owner, and Contractor of all tests one week in advance so tests can be witnessed.

3.18 A qualified representative of the medical gas equipment supplier shall inspect the entire

installation, perform startup services, witness all tests, check all outlets and alarms, and certify in writing that the system is installed correctly. Furnish three copies of the certification letter to the Architect/Engineer prior to final inspection.

END OF SECTION

THIS PAGE INTENTIONALLY LEFT BLANK

SECTION 23 01 00 - MECHANICAL GENERAL

1 GENERAL

1.1 The work covered by this division consists of providing all labor, equipment and materials and performing all operations necessary for the installation of the mechanical work as herein called for and shown on the drawings.

1.2 Related Documents:

1.2.1 Drawings and general provisions of the Contract, including General and Supplementary Conditions and Division 1 Specification sections, apply to work of this section.

1.2.2 This is a Basic Mechanical Requirements Section. Provisions of this section apply to work of all Division 23 sections.

1.2.3 Review all other contract documents to be aware of conditions affecting work herein.

1.2.4 Definitions:

1.2.4.1 Provide: Furnish and install, complete and ready for intended use.

1.2.4.2 Furnish: Supply and deliver to project site, ready for subsequent requirements.

1.2.4.3 Install: Operations at project site, including unloading, unpacking, assembly, erection, placing, anchoring, applying, working to dimension, finishing, curing, protecting, cleaning, and similar requirements.

1.3 Permits and Fees: Contractor shall obtain all necessary permits, meters, and inspections required for his work and pay all fees and charges incidental thereto.

1.4 Verification of Owner's Data: Prior to commencing any work the Contractor shall satisfy himself as to the accuracy of all data as indicated in these plans and specifications and/or as provided by the Owner. Should the Contractor discover any inaccuracies, errors, or omissions in the data, he shall immediately notify the Architect/Engineer in order that proper adjustments can be anticipated and ordered. Commencement by the Contractor of any work shall be held as an acceptance of the data by him after which time the Contractor has no claim against the Owner resulting from alleged errors, omissions or inaccuracies of the said data.

1.5 Delivery and Storage of Materials: Materials delivered to site shall be inspected for damage, unloaded, and stored with a minimum of handling. All material shall be stored to provide protection from the weather and accidental damage.

1.6 Extent of work is indicated by the drawings, schedules, and the requirements of the specifications. Singular references shall not be constructed as requiring only one device if multiple devices are shown on the drawings or are required for proper system operation.

1.7 Field Measurements and Coordination:

1.7.1 The intent of the drawings and specifications is to obtain a complete and satisfactory installation. Separate divisional drawings and specifications shall not relieve the Contractor

or subcontractors from full compliance of work of his trade indicated on any of the drawings or in any section of the specifications.

1.7.2 Verify all field dimensions and locations of equipment to insure close, neat fit with other trades' work. Make use of all contract documents and approved shop drawings to verify exact dimension and locations.

1.7.3 Coordinate work in this division with all other trades in proper sequence to insure that the total work is completed within contract time schedule and with a minimum cutting and patching.

1.7.4 Locate all apparatus symmetrical with architectural elements. Install to exact height and locations when shown on architectural drawings. When locations are shown only on mechanical drawings, be guided by architectural details and conditions existing at job and correlate this work with that of others.

1.7.5 Install work as required to fit structure, avoid obstructions, and retain clearance, headroom, openings and passageways. Cut no structural members without written approval.

1.7.6 Carefully examine any existing conditions, piping, and premises. Compare drawings with existing conditions. Report any observed discrepancies. It shall be the Contractor's responsibility to properly coordinate the work and to identify problems in a timely manner. Written instructions will be issued to resolve discrepancies.

1.7.7 Because of the small scale of the drawings, it is not possible to indicate all offsets and fittings or to locate every accessory. Drawings are essentially diagrammatic. Study carefully the sizes and locations of structural members, wall and partition locations, trusses, and room dimensions and take actual measurements on the job. Locate piping, ductwork, equipment and accessories with sufficient space for installing and servicing. Contractor is responsible for accuracy of his measurements and for coordination with all trades. Contractor shall not order materials or perform work without such verification. No extra compensation will be allowed because field measurements vary from the dimensions on the drawings. If field measurements show that equipment or piping cannot be fitted, the Architect/Engineer shall be consulted. Remove and relocate, without additional compensation, any item that is installed and is later found to encroach on space assigned to another use.

1.8 Guarantee:

1.8.1 The Contractor shall guarantee labor, materials and equipment for a period of one (1) year from Final Completion, or from Owner's occupancy, whichever is earlier. Contractor shall make good any defects and shall include all necessary adjustments to and replacement of defective items without expense to the Owner.

1.8.2 Owner reserves right to make emergency repairs as required to keep equipment in operation without voiding Contractor's Guarantee Bond nor relieving Contractor of his responsibilities during guarantee period.

1.9 Approval Submittals:

1.9.1 When approved, the submittal control log and submittals shall be an addition to the specifications herewith, and shall be of equal force in that no deviation will be permitted except with the approval of the Architect/Engineer.

1.9.1.1 Shop drawings, product literature, and other approval submittals will only be reviewed if they are submitted in full accordance with the General and Supplementary Conditions and Division 1 Specification sections and the following.

1.9.1.1.1 Submittals shall be properly organized in accordance with the approved submittal control log.

1.9.1.1.2 Submittals shall not include items from more than one specification section in the same submittal package unless approved in the submittal control log.

1.9.1.1.3 Submittals shall be properly identified by a cover sheet showing the project name, Architect and Engineer names, submittal control number, specification section, a list of products or item names with model numbers in the order they appear in the package, and spaces for approval stamps. A sample cover sheet is included at the end of this section.

1.9.1.1.4 Submittals shall have been reviewed and approved by the General Contractor (or Prime Contractor). Evidence of this review and approval shall be an "Approved" stamp with a signature and date on the cover sheet.

1.9.1.1.5 Submittals that include a series of fixtures or devices (such as plumbing fixtures or valves) shall be organized by the fixture number or valve type and be marked accordingly. Each fixture must include all items associated with that fixture regardless of whether or not those items are used on other fixtures.

1.9.1.1.6 The electrical design shown on the drawings supports the mechanical equipment basis of design specifications at the time of design. If mechanical equipment is submitted with different electrical requirements, it is the responsibility of the mechanical contractor to resolve all required electrical design changes (wire and conduit size, type of disconnect or overload protection, point(s) of connection, etc.) and clearly show the new electrical design on the mechanical submittal with a written statement that this change will be provided at no additional cost. Mechanical submittals made with no written reference to the electrical design will be presumed to work with the electrical design. Any corrections required will be at no additional cost.

1.9.2 If the shop drawings show variation from the requirements of contract because of standard shop practice or other reasons, the Contractor shall make specific mention of such variation in writing in his letter of transmittal and on the submittal cover sheet in order that, if acceptable, Contractor will not be relieved of the responsibility for executing the work in accordance with the contract.

1.9.3 Review of shop drawings, product literature, catalog data, or schedules shall not relieve the Contractor from responsibility for deviations from contract drawings or specifications, unless he has in writing called to the attention of the Architect/Engineer each such deviation in writing at the time of submission, nor shall it relieve him from responsibility for errors of any sort in shop drawings, product literature, catalog data, or schedules. Any feature or function specified but not mentioned in the submittal shall be assumed to be included per the specification.

1.9.4 Submit shop drawings as called for in other sections after award of the contract and before any material is ordered or fabricated. Shop drawings shall consist of plans, sections, elevations and details to scale (not smaller than ¼" per foot), with dimensions clearly showing the installation. Direct copies of small scale project drawings issued to the Contractor are not acceptable. Drawings shall take into account equipment furnished under other sections and shall show space allotted for it. Include construction details and materials.

1.10 Test Reports and Verification Submittals: Submit test reports, certifications and verification letters as called for in other sections. Contractor shall coordinate the required testing and documentation of system performance such that sufficient time exists to prepare the reports, submit the reports, review the reports and take corrective action within the scheduled contract time.

1.11 O&M Data Submittals: Submit Operation and Maintenance data as called for in other sections. When a copy of approval submittals is included in the O&M Manual, only the final "Approved" or "Approved as Noted" copy shall be used. Contractor shall organize these data in the O&M Manuals tabbed by specification number. Prepare O&M Manuals as required by Division 1 and as described herein.. Submit manuals at the Substantial Completion inspection.

2 PRODUCTS

2.1 All materials shall be new or Owner-supplied reused as shown on the drawings, the best of their respective kinds, suitable for the conditions and duties imposed on them at the building and shall be of reputable manufacturers. The description, characteristics, and requirements of materials to be used shall be in accordance with qualifying conditions established in the following sections.

2.2 Equipment and Materials:

2.2.1 Shall be new and the most suitable grade for the purpose intended. Equipment furnished under this division shall be the product of a manufacturer regularly engaged in the manufacture of such items for a period of three years. Where practical, all of the components shall be products of a single manufacturer in order to provide proper coordination and responsibility. Where required, Contractor shall furnish proof of installation of similar units or equipment.

2.2.2 Each item of equipment shall bear a name plate showing the manufacturer's name, trade name, model number, serial number, ratings and other information necessary to fully identify it. This plate shall be permanently mounted in a prominent location and shall not be concealed, insulated or painted.

2.2.3 The label of the approving agency, such as UL, IBR, ASME, ARI, AMCA, by which a standard has been established for the particular item shall be in full view.

2.2.4 The equipment shall be essentially the standard product of a manufacturer regularly engaged in the production of such equipment and shall be a product of the manufacturer's latest design.

2.2.5 A service organization with personnel and spare parts shall be available within two hours for each type of equipment furnished.

2.2.6 Install in accordance with manufacturer's recommendations. Place in service by a factory trained representative where required.

2.2.7 Materials and equipment are specified herein by a single or by multiple manufacturers to indicate quality, material and type of construction desired. Manufacturer's products shown on the drawings have been used as basis for design; it shall be the Contractor's responsibility to ascertain that alternate manufacturer's products, or the particular products of named manufacturers, meet the detailed specifications and that size and arrangement of equipment are suitable for installation.

2.2.8 Model Numbers: Catalog numbers and model numbers indicated in the drawings and specifications are used as a guide in the selection of the equipment and are only listed for the contractor's convenience. The contractor shall determine the actual model numbers for ordering materials in accordance with the written description of each item and with the intent of the drawings and specifications.

2.2.9 All equipment and material shall be manufactured and assembled in the United States.

2.3 Requests for Substitution:

2.3.1 Where a particular system, product or material is specified by name, consider it as standard basis for bidding, and base proposal on the particular system, product or material specified.

2.3.2 Requests by Contractor for substitution will be considered only when reasonable, timely, fully documented, and qualifying under one or more of the following circumstances.

2.3.2.1 Required product cannot be supplied in time for compliance with Contract time requirements.

2.3.2.2 Required product is not acceptable to governing authority, or determined to be non-compatible, or cannot be properly coordinated, warranted or insured, or has other recognized disability as certified by Contractor.

2.3.2.3 Substantial cost advantage is offered Owner after deducting offsetting disadvantages including delays, additional compensation for redesign, investigation, evaluation and other necessary services and similar considerations.

2.3.3 All requests for substitution shall contain a "Comparison Schedule" and clearly and specifically indicate any and all differences or omissions between the product specified as the basis of design and the product proposed for substitution. Differences shall include but shall not be limited to data as follows for both the specified and substituted products:

Principal of operation.
Materials of construction or finishes.
Thickness of gauge of materials.
Weight of item.
Deleted features or items.
Added features or items.
Changes in other work caused by the substitution.
Performance curves.

If the approved substitution contains differences or omissions not specifically called to the attention of the Architect/Engineer, the Owner reserves the right to require equal or similar features to be added to the substituted products (or to have the substituted products replaced) at the Contractor's expense.

3 EXECUTION

3.1 Workmanship: All materials and equipment shall be installed and completed in a first-class workmanlike manner and in accordance with the best modern methods and practice. Any materials installed which do not present an orderly and reasonably neat and/or workmanlike appearance, or do not allow adequate space for maintenance, shall be removed and replaced when so directed by the Architect/Engineer.

3.2 Coordination:

3.2.1 The Contractor shall be responsible for full coordination of the mechanical systems with shop drawings of the building construction so the proper openings and sleeves or supports are provided for piping, ductwork, or other equipment passing through slabs or walls.

3.2.2 Any additional steel supports required for the installation of any mechanical equipment, piping, or ductwork shall be furnished and installed under the section of the specifications requiring the additional supports.

3.2.3 It shall be the Contractor's responsibility to see that all equipment such as valves, dampers, filters and such other apparatus or equipment that may require maintenance and operation are made easily accessible, regardless of the diagrammatic location shown on the drawings.

3.2.4 All connections to fixtures and equipment shown on the drawings shall be considered diagrammatic unless otherwise indicated by detail. The actual connections shall be made to fully suit the requirements of each case and adequately provide for expansion and servicing.

3.2.5 The contractor shall protect equipment, material, and fixtures at all times. He shall replace all equipment, material, and fixtures which are damaged as a result of inadequate protection.

3.2.6 Prior to starting and during progress of work, examine work and materials installed by others as they apply to work in this division. Report conditions which will prevent satisfactory installation.

3.2.7 Start of work will be construed as acceptance of suitability of work of others.

3.3 Interruption of Service: Before any equipment is shut down for disconnecting or tie-ins, arrangements shall be made with the Architect/Engineer and this work shall be done at the time best suited to the Owner. This will typically be on weekends and/or holidays and/or after normal working hours. Services shall be restored the same day unless prior arrangements are made. All overtime or premium costs associated with this work shall be included in the base bid.

3.4 Phasing: Provide all required temporary valves, piping, ductwork, equipment and devices as required. Maintain temporary services to areas as required. Remove all temporary

material and equipment on completion of work unless Engineer concurs that such material and equipment would be beneficial to the Owner on a permanent basis.

3.5 Cutting and Patching: Notify General Contractor to do all cutting and patching of all holes, chases, sleeves, and other openings required for installation of equipment furnished and installed under this section. Utilize experienced trades for cutting and patching. Obtain permission from Architect/Engineer before cutting any structural items.

3.6 Equipment Setting: Bolt equipment directly to concrete pads or vibration isolators as required, using hot-dipped galvanized anchor bolts, nuts and washers. Level equipment.

3.7 Painting: Touch-up factory finishes on equipment located inside and outside shall be done under Division 23. Obtain matched color coatings from the manufacturer and apply as directed. If corrosion is found during inspection on the surface of any equipment, clean, prime, and paint, as required.

3.8 Clean-up: Thoroughly clean all exposed parts of apparatus and equipment of cement, plaster, and other materials and remove all oil and grease spots. Repaint or touch up as required to look like new. During progress of work, contractor is to carefully clean up and leave premises and all portions of building free from debris and in a clean and safe condition.

3.9 Start-up and Operational Test: Start each item of equipment in strict accordance with the manufacturer's instructions; or where noted under equipment specification, start-up shall be done by a qualified representative of the manufacturer. Alignment, lubrication, safety, and operating control shall be included in start-up check.

3.10 Climate Control: Operate heating and cooling systems as required after initial startup to maintain temperature and humidity conditions to avoid freeze damage and warping or sagging of ceilings and carpet.

3.11 Record Drawings:

3.11.1 During the progress of the work the Contractor shall record on their field set of drawings the exact location, as installed, of all piping, ductwork, equipment, and other systems which are not installed exactly as shown on the contract drawings.

3.11.2 Upon completion of the work, record drawings shall be prepared as described in the General Conditions, Supplementary Conditions, and Division 1 sections.

3.12 Acceptance:

3.12.1 Punch List: Submit written confirmation that all punch lists have been checked and the required work completed.

3.12.2 Instructions: At completion of the work, provide a competent and experienced person who is thoroughly familiar with project, for one day to instruct permanent operating personnel in operation of equipment and control systems. This is in addition to any specific equipment operation and maintenance training.

3.12.3 Operation and Maintenance Manuals: Furnish four complete manuals bound in ring binders with Table of Contents, organized, and tabbed by specification section. Manuals shall contain:

Detailed operating instructions and instructions for making minor adjustments.
Complete wiring and control diagrams.
Routine maintenance operations.
Manufacturer's catalog data, service instructions, and parts lists for each piece of operating equipment.
Copies of approved submittals.
Copies of all manufacturer's warranties.
Copies of test reports and verification submittals.

3.12.4 Record Drawings: Submit record drawings.

3.12.5 Test and Balance Report: Submit four certified copies. The Report shall be submitted for review prior to the Substantial Completion Inspection unless otherwise required by Division 1.

3.12.6 Acceptance will be made on the basis of tests and inspections of job. A representative of firm that performed test and balance work shall be in attendance to assist. Contractor shall furnish necessary mechanics to operate system, make any necessary adjustments and assist with final inspection.

3.12.7 Control Diagrams: Frame under glass and mount on equipment room wall.

END OF SECTION 23 01 00

SECTION 23 05 13 - ELECTRIC MOTORS

1 GENERAL

1.1 Drawings and general provisions of the Contract, including General and Supplementary Conditions and Division 1 Specifications Section apply to work of this Section.

1.2 This section is a Division 23 Basic Mechanical Materials and Methods section, and is part of each Division 23 section making reference to motors specified herein.

1.3 Extent of motors required by this section is indicated on drawings and/or specified in other Division-23 sections.

1.4 Comply with the requirements of Division 26.

1.5 UL Compliance: Comply with applicable UL standards pertaining to motors.

1.6 Approval Submittals:

1.6.1 Product Data: When required by other Division-23 sections, submit manufacturers standard product data sheets for each type of motor provided. Submit with Division-23 section using the motors, not as a separate submittal. Mark data sheet with arrows indicating product being supplied and list by unique descriptive name all motors to which each data sheet applies. Clearly indicate type, service factor, rpm, duty cycle, voltage, phase, nominal full load efficiency, power factor and insulation class. Field verify and coordinate mounting and frame requirements for matching the drive.

1.7 O&M Data Submittals: Submit a copy of approval submittals. Submit operation and maintenance data for each type of motor. Include these data in O&M Manual. Submit two copies of nameplate data sheet for each motor. One copy shall be included with the O&M Manual and a second copy shall be inserted in a waterproof pouch or bag and attached to the motor. Nameplate data sheets shall be typed or neatly printed and shall include all data on the motor nameplate plus a unique motor description such as "AHU-3 Fan Motor", "Distribution Pump #1" or similar description.

2 PRODUCTS

2.1 Acceptable Manufacturers: Subject to compliance with requirements, General Electric, Baldor, US Electric, or approved equal.

2.2 General:

2.2.1 Motors shall conform to applicable portions of NEMA Standard MG-1, Motors and Generators.

2.2.2 Motors shall be sized for the application such that when the driven equipment is operated at rated capacity the motor current will not exceed the full-load nameplate current. Service factor shall not be used in normal operation.

2.3 Motor Design:

2.3.1 Integral Horsepower Motors:

2.3.1.1 Motors shall be open drip-proof or totally enclosed fan cooled as shown on the drawings or listed in the Division 23 section requiring motors.

2.3.1.2 Motors shall be three phase, 60 hertz, nominal 1800 rpm, rated at 200 volts for 208 volt systems, 230 volts for 240 volt systems and 460 volts for 480 volt systems.

2.3.1.3 Motors shall be NEMA Design B and shall have 1.15 service factor or greater at 60 hertz.

2.3.1.4 Insulation Systems

2.3.1.4.1 In fixed speed applications, motors shall have Class B insulation with 80ºC rise over 40ºC ambient.

2.3.1.4.2 For variable frequency drive (VFD) applications, motors shall have Class F insulation with 105ºC rise over 40ºC ambient. Motor manufacturer shall identify motors being used for VFD applications by marking the motor with a stainless steel name-plate “Inverter Duty”. Motors shall be provided with one set of thermostatic sensors.

2.3.1.5 Motor efficiencies shall be based on IEEE-112, 1984, Test Method B, as specified in NEMA Standard MG1-12.53. NEMA motor efficiency and power factor shall be clearly shown on the motor nameplate. Inverter duty motors shall have a CIV rating based on NEMA.

2.3.1.6 Motors shall be premium efficiency type and shall meet or exceed the following minimum nominal efficiencies at rated voltage.

230/460 VOLT, 3 PHASE

HORSEPOWER RANGE	MINIMUM NOMINAL EFFICIENCY	MINIMUM ACCEPTABLE POWER FACTOR
1 to 2 hp	84.0 pct.	75.0 pct
3 to 5 hp	87.5 pct.	77.0 pct
7.5 hp	89.5 pct.	80.0 pct
10 hp	90.2 pct.	80.0 pct
15 hp	91.0 pct.	82.0 pct
20 to 25 hp	92.0 pct.	82.0 pct
30 hp	92.4 pct.	82.0 pct
40 to 50 hp	93.0 pct.	85.0 pct
60 hp	93.6 pct.	85.0 pct
75 hp	94.1 pct.	85.0 pct
100 to 125 hp	94.5 pct.	85.0 pct
150 to 200 hp	95.0 pct.	85.0 pct
over 200 hp	95.4 pct.	87.0 pct

200 VOLT, 3 PHASE

HORSEPOWER RANGE	MINIMUM NOMINAL EFFICIENCY	MINIMUM ACCEPTABLE POWER FACTOR
1 to 2 hp	84.0 pct.	75.0 pct
3 to 5 hp	87.5 pct.	77.0 pct
7.5 hp	89.5 pct.	80.0 pct
10 hp	90.2 pct.	80.0 pct
15 hp	91.0 pct.	80.0 pct
20 to 25 hp	92.0 pct.	80.0 pct

2.3.1.7 Motors 25 hp and larger which are to be installed outdoors or in other high humidity areas shall be equipped with silicone rubber space heaters. Space heaters shall be energized when motor is de-energized.

2.3.2 Fractional Horsepower Motors one-half hp and above:

2.3.2.1 Motors shall be open drip-proof or totally enclosed fan cooled as shown on the drawings or listed in the Division 23 section requiring motors.

2.3.2.2 Motors shall be three phase, 60 hertz, nominal 1800 rpm, rated at 200, 230 or 460 volts as shown on the drawings.

2.3.2.3 Motors shall be NEMA Design B with class B insulation, unless used with variable frequency drives.

2.3.3 Fractional Horsepower Motors less than one-half hp:

2.3.3.1 Motors shall be single phase, 60 hertz, rated at 120 volts with integral thermal protection.

2.4 Overload Protection: Properly sized overload protection shall be provided for each motor. This protection may be an integral part of the motor or may be part of the motor controller and shall interrupt each ungrounded conductor.

3 EXECUTION

3.1 Motor Size and Location:

3.1.1 Size and location of motors shown on the drawings are based on a particular design and may change with a different manufacturer. Submittal of shop drawings or product literature indicating motor sizes or locations different from that designed indicates that Contractor has fully coordinated any required changes to the electrical system with other trades. Approval (if made) is on this basis and no additional cost will be allowed for any changes.

3.1.2 Contractor shall verify and make any necessary adjustments to electrical service, branch circuit wiring, branch circuit protection, overload protection, disconnect and controller

(starter), or VFD based on actual nameplate data of the motors supplied prior to installation. Where applicable, connect motor winding thermostat to VFD.

3.2 Motor Voltages: Contractor shall field verify system voltage prior to ordering or installing any motors. Submittal of shop drawings or product literature indicating motor voltages indicates that Contractor has fully coordinated the motor with the electrical system and that any discrepancies have been resolved. Approval (if made) is on this basis and no additional cost will be allowed for any changes.

3.3 Motor Mounting: Adjust motor mounting as required to adjust the drive train for proper belt operation and to accommodate sheave changes or other requirements of the test and balance work.

3.4 Motor Mounting: Install the new motor and mounting hardware as required to properly drive the existing equipment. Provide all necessary hardware and modifications to the existing equipment necessary to achieve a system that has the proper alignment and can drive the equipment in a smooth, quiet, vibration-free manner. Provide for proper servicing of the motor and drive.

END OF SECTION 23 05 13

SECTION 23 05 20 - PIPES AND PIPE FITTINGS

1 GENERAL

1.1 Drawings and general provisions of Contract, including General and Supplementary Conditions and Division-1 Specification sections, apply to work of this section.

1.2 This section is a Division-23 Basic Mechanical Materials and Methods section, and is part of each Division-23 section making reference to pipes and pipe fittings specified herein.

1.3 Extent of pipes and pipe fittings required by this section is indicated on drawings and/or specified in other Division-23 sections.

1.4 Codes and Standards:

1.4.1 Welding: Qualify welding procedures, welders and operators in accordance with ASME B31.1, or ASME B31.9, as applicable, for shop and project site welding of piping work.

1.4.2 Brazing: Certify brazing procedures, brazers, and operators in accordance with ASME Boiler and Pressure Vessel Code, Section IX, for shop and job-site brazing of piping work.

1.4.3 NSF Labels: Where plastic piping is indicated to transport potable water, provide pipes and pipe fittings bearing approval label by National Sanitation Foundations (NSF).

1.5 Test Report and Verification Submittals:

1.5.1 Submit welding certification for all welding installers.

1.5.2 Submit brazing certification for all brazing installers.

2 PRODUCTS

2.1 Piping Materials: Provide pipe and tube of type, joint type, grade, size and weight (wall thickness or Class) indicated for each service. Where type, grade or class is not indicated, provide proper selection as determined by Installer for installation requirements, and comply with governing regulations and industry standards.

2.2 Pipe/Tube Fittings: Provide factory-fabricated fittings of type, materials, grade, class and pressure rating indicated for each service and pipe size. Provide sizes and types matching pipe, tube, valve or equipment connection in each case. Where not otherwise indicated, comply with governing regulations and industry standards for selections, and with pipe manufacturer's recommendations where applicable.

2.3 Piping Materials/Products:

2.3.1 Soldering Materials:

2.3.1.1 Tin-Antimony (95-5) Solder: ASTM B-32, Grade 95TA.

2.3.1.2 Silver-Phosphorus Solder: ASTM B-32, Grade 96TS.

2.3.2 Pipe Thread Tape: Teflon tape.

2.3.3 Protective Coating: Koppers Bitumastic No. 505 or equal.

2.3.4 Gaskets for Flanged Joints: ANSI B16.21; full-faced for cast iron flanges; raised-face for steel flanges, unless otherwise noted.

2.3.5 Welding Materials: Comply with Section II, Part C, ASME Boiler and Pressure Vessel Code for welding materials. Materials shall be determined by installer to comply with installation requirements.

2.3.6 Brazing Materials: Silver content of not less than 15%. Materials shall be determined by installer to comply with installation requirements.

2.4 Copper Tube and Fittings:

2.4.1 Copper Tube:

2.4.1.1 Copper Tube: ASTM B88; Type K or L as indicated for each service; hard-drawn temper unless specifically noted as annealed.

2.4.1.2 ACR Copper Tube: ASTM B280.

2.4.2 Fittings:

2.4.2.1 Wrought-Copper Solder-Joint Fittings: ANSI B16.22.

2.4.2.2 Copper Tube Unions: Provide standard products recommended by manufacturer for use in service indicated.

2.4.2.3 Cast-Copper Flared Tube Fittings: ANSI B16.26.

2.5 Steel Pipes and Pipe Fittings

2.5.1 Pipes:

2.5.1.1 Black Steel Pipe: ASTM A-53 or A-120, seamless.

2.5.1.2 Galvanized Steel Pipe: ASTM A-53 or A-120, seamless.

2.5.2 Pipe Fittings:

2.5.2.1 Threaded Cast Iron: ANSI B16.4.

2.5.2.2 Threaded Malleable Iron: ANSI B16.3; plain or galvanized as indicated.

2.5.2.3 Malleable Iron Threaded Unions: ANSI B16.39; selected by installer for proper piping fabrication and service requirements including style, end connections, and metal-to-metal seats (iron, bronze or brass); plain or galvanized as indicated.

2.5.2.4 Threaded Pipe Plugs: ANSI B16.14.

2.5.2.5 Flanged Cast Iron: ANSI B16.1, including bolting.

2.5.2.6 Steel Flanges/Fittings: ANSI B16.5, including bolting and gasketing.

2.5.2.7 Wrought-Steel Buttwelding Fittings: ANSI B16.9, except ANSI B16.28 for short radius elbows and returns, rated to match connected pipe.

2.5.2.8 Pipe Nipples: Fabricated from same pipe as used for connected pipe; except do not use less than schedule 80 pipe where length remaining unthreaded is less than 1 ½ inches, and where pipe size is less than 1 ½ inches, and do not thread nipples full length (no close-nipples).

2.6 Plastic Pipes and Fittings:

2.6.1 Pipes:

2.6.1.1 PVC DWV Pipe: ASTM D-2665, Schedule 40.

2.6.1.2 PVC Sewer Pipe: ASTM D-3034.

2.6.2 Fittings:

2.6.2.1 PVC Solvent Cement: ASTM D-2564.

2.6.2.2 PVC DWV Socket: ASTM D-2665.

2.6.2.3 PVC Sewer Socket: ASTM D-3034.

3 EXECUTION

3.1 Installation

3.1.1 General: Install pipes and pipe fittings in accordance with recognized industry practices which will achieve permanently-leak proof piping systems, capable of performing each indicated service without piping failure. Install each run with minimum joints and couplings, but with adequate and accessible unions for disassembly and maintenance or replacement of valves and equipment. Reduce sizes (where indicated) by use of reducing fittings, not bushings. Align piping accurately at connections, within 1/16" misalignment tolerance.

3.1.2 Comply with ANSI B31 Code for Pressure Piping.

3.1.3 Locate piping runs, except as otherwise indicated, vertically and horizontally (pitched to drain) and avoid diagonal runs wherever possible. Orient horizontal runs parallel with walls and column lines. Locate runs as shown or described by diagrams, details and notations or, if not otherwise indicated, run piping in shortest route which does not obstruct usable space or block access for servicing building and its equipment. Hold piping close to walls, overhead construction, columns and other structural and permanent-enclosure elements of building; limit clearance to ½" where furring is shown for enclosure or concealment of piping, but allow for insulation thickness, if any. Where possible, locate insulated piping for 1" clearance outside insulation.

3.1.4 Concealed Piping: Unless specifically noted as “Exposed” on the drawings, conceal piping from view in finished and occupied spaces, by locating in column enclosures, chases, in

hollow wall construction or above suspended ceilings; do not encase horizontal runs in solid partitions, except as indicated.

3.1.5 Electrical Equipment Spaces: Do not run piping through transformer vaults and other electrical, communications, or data equipment spaces and enclosures unless shown. Install drip pan under piping that must run through electrical spaces.

3.1.5.1 Cut pipe from measurements taken at the site, not from drawings. Keep pipes free of contact with building construction and installed work.

3.2 Piping System Joints: Provide joints of the type indicated in each piping system.

3.2.1 Solder copper tube-and-fitting joints where indicated, in accordance with recognized industry practice. Cut tube ends squarely, ream to full inside diameter, and clean outside of tube ends and inside of fittings. Apply non-acid type solder flux to joint areas of both tubes and fittings. Insert tube full depth into fitting, and solder in manner which will draw solder full depth and circumference of joint. Wipe excess solder from joint before it hardens.

3.2.2 Thread pipe in accordance with ANSI B2.1; cut threads full and clean using sharp dies. Ream threaded ends to remove burrs and restore full inside diameter. Apply pipe joint compound, or pipe joint tape (Teflon) where recommended by pipe/fitting manufacturer, on male threads at each joint and tighten joint to leave not more than 3 threads exposed. Paint exposed threads to retard rusting.

3.2.3 Flanged Joints: Match flanges within piping system, and at connection with valves and equipment. Clean flange faces and install gaskets. Tighten bolts to provide uniform compression of gaskets. Bolts shall project 1/8" to 3/8" beyond nut face when tight.

3.2.4 Weld pipe joints in accordance with recognized industry practice and as follows. Be guided by ANSI B.31.

3.2.4.1 Weld pipe joints only when ambient temperature is above 0°F.

3.2.4.2 Bevel pipe ends at a 37.5° angle where possible, smooth rough cuts, and clean to remove slag, metal particles and dirt.

3.2.4.3 Use pipe clamps or tack-weld joints; 4 welds for pipe sizes to 10". All welds shall be open-butt.

3.2.4.4 Build up welds with root pass, followed by filler pass and then a cover pass. Eliminate valleys at center and edges of each weld. Weld by procedures which will ensure elimination of unsound or unfused metal, cracks, oxidation, blow-holes and non-metallic inclusions.

3.2.4.5 Do not weld-out piping system imperfections by tack-welding procedures; refabricate to comply with requirements.

3.2.4.6 At Installer's option, install forged branch-connection fittings wherever branch pipe is less than 3" and at least two pipe sizes smaller than main pipe indicated; or install regular "T" fitting. Weld-O-Let or equal.

3.2.4.7 All field welding and cutting using oxygen-acetylene methods within the building shall be performed in accordance with NFPA-51B (1994).

3.2.4.8 Limit the use of welded piping to shop-fabricated only. Neither welding nor cutting with oxygen-acetylene methods will be permitted within the envelope of the hospital building.

3.2.5 Plastic Pipe Joints: Comply with manufacturer's instructions and recommendations, and with applicable industry standards.

3.2.5.1 Solvent-cemented joints shall be made in accordance with ASTM D-2235 and ASTM F-402.

3.2.5.2 PVC sewer pipe bell/gasket joints shall be installed in accordance with ASTM D-2321.

3.2.6 Cast-Iron Joints: Tightly pack joint with joint packing material. Do not permit packing to enter bore of finished joint. Clean joint after packing. Fill remaining joint space with one pouring of lead to indicated minimum depth measured from face of bell. After lead has cooled, calk joint tightly by use of hammer and calking iron. If using compression joints, comply with manufacturer's installation instruction using gaskets and lubricant furnished specifically for this duty.

3.2.7 Braze copper tube-and-fitting joints where indicated, in accordance with ANSI B.31.

3.3 Piping Installation

3.3.1 Install piping to allow for expansion and contraction.

3.3.2 Isolate all copper tubing from steel and concrete by wrapping the pipe at the contact point, and for one inch on each side, with a continuous plastic sleeve. Isolate all copper tubing installed in block walls with a continuous plastic sleeve.

3.3.3 Underground Piping:

3.3.3.1 Provide plastic tape markers over all underground piping. Provide copper wire over all underground plastic piping. Locate markers 18" above piping.

3.3.3.2 Coat the following underground (uninsulated) pipes with a heavy coat of bitumastic or provide an 8 mil polyvinyl sleeve: black steel pipe, galvanized steel pipe, copper tubing.

3.3.3.3 Install underground glass pipes in a protective casing of expanded polystyrene. Underground glass fittings shall be wrapped with protective plastic sheets or bags. Use care to prevent scratching or chipping glass pipes and fittings.

END OF SECTION

THIS PAGE INTENTIONALLY LEFT BLANK

SECTION 23 05 21 - PIPING SPECIALTIES

1 GENERAL

1.1 Drawings and general provisions of contract, including General and Supplementary Conditions and Division-1 Specification sections, apply to work of this section.

1.2 This section is a Division-23 Basic Mechanical Materials and Methods section, and is part of each Division-23 section making reference to or requiring piping specialties specified herein.

1.3 Approval Submittals:

1.3.1 Product Data: Submit product data with installation instructions and UL listing for:

1.3.1.1 Fire barrier sealants.

2 PRODUCTS

2.1 General: Provide factory-fabricated piping specialties recommended by manufacturer for use in service indicated. Provide piping specialties of types and pressure ratings indicated for each service, or if not indicated, provide proper selection as determined by Installer to comply with installation requirements. Provide sizes as indicated, and connections, which properly mate with pipe, tube, and equipment connections. Where more than one type is indicated, selection is Installer's option.

2.2 Escutcheons:

2.2.1 General: Provide pipe escutcheons as specified herein with inside diameter closely fitting pipe outside diameter, or outside of pipe insulation where pipe is insulated. Select outside diameter of escutcheon to completely cover pipe penetration hole in floors, walls, or ceilings; and pipe sleeve extension, if any. Furnish pipe escutcheons with nickel or chrome finish for occupied areas, prime paint finish for unoccupied areas.

2.2.2 Pipe Escutcheons for Moist Areas: For waterproof floors, and areas where water and condensation can be expected to accumulate, provide cast brass or sheet brass escutcheons, solid or split hinged.

2.2.3 Pipe Escutcheons for Dry Areas: Provide sheet steel escutcheons, solid or split hinged.

2.3 Dielectric Unions Waterways: Provide standard products recommended by manufacturer for use in service indicated, which effectively isolate ferrous from non-ferrous piping (electrical conductance), prevent galvanic action and stop corrosion.

2.4 Fire Barrier Penetration Seals:

2.4.1 Provide seals for any opening through fire-rated walls, floors, or ceilings used as passage for mechanical components such as piping or ductwork in accordance with the requirements of Division 7.

2.4.2 Cracks, Voids, or Holes Up to 4" Diameter: Use putty or calking, one-piece intumescent elastomer, non-corrosive to metal, compatible with synthetic cable jackets, and capable of expanding 10 times when exposed to flame or heat, UL-listed.

2.4.3 Openings 4" or Greater: Use sealing system capable of passing 3-hour fire test in accordance with ASTM E-814, consisting of wall wrap or liner, partitions, and end caps capable of expanding when exposed to temperatures of 250 to 350°F, UL-listed.

2.5 Fabricated Piping Specialties:

2.5.1 Drip Pans: Provide drip pans fabricated from corrosion-resistant sheet metal with watertight joints, and with edges turned up 2-1/2". Reinforce top, either by structural angles or by rolling top over ¼" steel rod. Provide hole, gasket, and flange at low point for watertight joint and 1" drain line connection.

2.5.2 Pipe Sleeves: Provide pipe sleeves of one of the following:

2.5.2.1 Sheet-Metal: Fabricate from galvanized sheet metal; round tube closed with snaplock joint, welded spiral seams, or welded longitudinal joint. Fabricate from the following gages: 3" and smaller, 20 gage; 4" to 6" 16 gauge; over 6", 14 gage.

2.5.2.2 Steel-Pipe: Fabricate from Schedule 40 galvanized steel pipe; remove burrs.

2.5.2.3 Iron-Pipe: Fabricate from cast-iron or ductile-iron pipe; remove burrs.

2.5.3 Sleeve Seals: Provide sleeve seals for sleeves located in foundation walls below grade, or in exterior walls, of one of the following:

2.5.3.1 Caulking and Sealant: Provide foam or caulking and sealant compatible with piping materials used.

2.6 Low Pressure Y-Type Pipeline Strainers:

2.6.1 General: Provide strainers full line size of connecting piping, with ends matching piping system materials. Provide Type 304 stainless steel screens.

2.6.1.1 Water Strainers: Select for 200 psi working pressure (water, oil or gas). Provide 20 mesh screens through 2" size and 1/16" perforations for 2½" size and larger.

2.6.2 Select from the following types:

2.6.2.1 Threaded Ends, 2" and Smaller: Cast-iron body, screwed screen retainer with centered blowdown fitted with pipe plug.

2.6.2.2 Threaded Ends, 2-1/2" and Larger: Cast-iron body, bolted screen retainer with off-center blowdown fitted with pipe plug.

2.6.2.3 Flanged Ends, 2-1/2" and Larger: Cast-iron body, bolted screen retainer with off-center blowdown fitted with pipe plug.

3 EXECUTION

3.1 Pipe Escutcheons: Install pipe escutcheons on each pipe penetration through floors, walls, partitions, and ceilings where penetration is exposed to view; and on exterior of building. Secure escutcheon to pipe or insulation so escutcheon covers penetration hole, and is flush with adjoining surface.

3.2 Dielectric Unions : Install at each piping joint between ferrous and non-ferrous piping. Comply with manufacturer's installation instructions.

3.3 Fire Barrier Penetration Seals: Provide pipe sleeve as required. Fill entire opening with sealing compound. Adhere to manufacturer's installation instructions. Refer to Division 7.

3.4 Drip Pans: Locate drip pans under piping passing over or within 3' horizontally of electrical equipment, and elsewhere as indicated. Hang from structure with rods and building attachments, weld rods to sides of drip pan. Brace to prevent sagging or swaying. Connect 1" drain line to drain connection, and run to nearest plumbing drain or elsewhere as indicated.

3.5 Pipe Sleeves: Install pipe sleeves of types indicated where piping passes through walls, floors, ceilings, and roofs. Do not install sleeves through structural members of work, except as detailed on drawings, or as reviewed by Architect/Engineer. Install sleeves accurately centered on pipe runs. Size sleeves so that piping and insulation (if any) will have free movement in sleeve, including allowance for thermal expansion; but not less than 2 pipe sizes larger than piping run. Where insulation includes vapor-barrier jacket, provide sleeve with sufficient clearance for installation. Install length of sleeve equal to thickness of construction penetrated, and finish flush to surface; except floor sleeves. Extend floor sleeves ¼" above level floor finish, and ¾" above floor finish sloped to drain. Provide temporary support of sleeves during placement of concrete and other work around sleeves, and provide temporary closure to prevent concrete and other materials from entering sleeves.

3.5.1 Install sleeves in fire-rated assemblies in accordance with the listing of the assembly and the fire barrier sealant.

3.5.2 Install sheet-metal sleeves at interior partitions and ceilings other than suspended ceilings. Fill annular space with caulking or fire barrier sealant as required.

3.5.3 Install steel-pipe sleeves at floor penetrations. Fill annular space with caulking or fire barrier sealant as required.

3.5.4 Install iron-pipe sleeves at all foundation wall penetrations and at exterior penetrations; both above and below grade. Fill annular space with caulking or mechanical sleeve seals.

3.6 Y-Type Strainers: Install Y-type strainers full size of pipeline, in accordance with manufacturer's installation instructions. Install pipe nipple and shutoff valve in strainer blow down connection, full size of connection, except for strainers ¾" and smaller installed ahead of control valves feeding individual terminals. Where indicated, provide drain line from shutoff valve to plumbing drain, full size of blow down connection.

3.7 Locate Y-type strainers in supply line ahead of the following equipment, and elsewhere as indicated, if integral strainer is not included in equipment:

Pumps

Temperature control valves.
Pressure reducing valves.
Temperature or pressure regulating valves.

END OF SECTION

SECTION 23 05 23 - VALVES

1 GENERAL

1.1 Drawings and general provisions of Contract, including General and Supplementary Conditions and Division-1 Specification sections, apply to the work of this section.

1.2 This section is a Division-23 Basic Materials and Methods section, and is part of each Division-23 section making reference to or requiring valves specified herein.

1.3 Extent of valves required by this section is indicated on drawings and/or specified in other Division-23 sections.

1.4 Quality Assurance:

1.4.1 Valve Dimensions: For face-to-face and end-to-end dimensions of flanged or welding-end valve bodies, comply with ANSI B16.10.

1.4.2 Valve Types: Provide valves of same type by same manufacturer.

1.4.3 Valve Listing: For valves on fire protection piping, provide UL listing.

1.5 Approval Submittals: When required by other Division-23 sections, submit product data, catalog cuts, specifications, and dimensioned drawings for each type of valve. Include pressure drop curve or chart for each type and size of valve. Submit valves with Division-23 section using the valves, not as a separate submittal. Submit valve comparison chart with applicable valves clearly marked if valves other than basis-of-design are to be used. For each valve, identify systems where the valve is intended for use.

1.5.1 Gate Valves. Type GA.

1.5.2 Globe Valves. Type GL.

1.5.3 Check Valves. Type CK.

1.5.4 Ball Valves. Type BA.

1.5.5 Butterfly Valves. Type BF.

1.6 O&M Data Submittals: Submit a copy of approval submittals. Submit installation instructions, maintenance data and spare parts lists for each type of valve. Include this data in the O&M Manual.

2 PRODUCTS

2.1 General: Provide factory-fabricated valves recommended by manufacturer for use in service indicated. Provide valves of types and pressure ratings indicated; provide proper selection as determined by Installer to comply with specifications and installation requirements. Provide sizes as indicated, and connections which properly mate with pipe, tube, and equipment connections.

2.2 Acceptable Manufacturers: Subject to compliance with requirements, provide valves of one of the producers listed for each valve type. Other valve manufacturers list names are also acceptable. The model numbers are listed for contractor's convenience only. In the case of a model number discrepancy, the written description shall govern.

2.3 Gate Valves:

2.3.1 Packing: Select valves designed for repacking under pressure when fully opened, equipped with non-asbestos packing suitable for intended service. Select valves designed so back seating protects packing and stem threads from fluid when valve is fully opened, and equipped with gland follower.

2.3.2 Comply with the following standards:

Cast Iron Valves: MSS SP-70. Cast Iron Gate Valves, Flanged and Threaded Ends.
Bronze Valves: MSS SP-80. Bronze Gate, Globe, Angle and Check Valves.
Steel Valves: ANSI B16.34. Steel Standard Class Valve Ratings.

2.3.3 Types of gate (GA) valves:

1 Threaded Ends 2" and Smaller (GA1): Class 125, bronze body, screwed bonnet, rising stem, solid wedge. Stockham B-100. Nibco T-111. Crane 428. Milwaukee 148.

2 Soldered Ends 2" and Smaller (GA2): Class 125, bronze body, screwed bonnet, non-rising stem, solid wedge. Stockham B-108 or B-109. Nibco S-111. Crane 1334. Milwaukee 149.

3 Flanged Ends 2½" and Larger (GA3): Class 125, iron body, bronze mounted, bolted bonnet, rising stem, OS&Y, solid wedge. Stockham G-623. Nibco F617-0. Crane 465½. Milwaukee F2885.

4 Threaded Ends 2" and Smaller (GA4): Class 150, bronze body, screwed bonnet, rising stem, solid wedge. Stockham B-122. Nibco T-131. Crane 431. Milwaukee 1150.

5 Soldered Ends 2" and Smaller (GA5): Class 150, bronze body, screwed bonnet, rising stem, solid wedge. Stockham B-124. Nibco S-134. Milwaukee 1169.

6 Threaded Ends 2" and Smaller (GA6): 175 WWP, bronze body, screwed bonnet, rising stem, OS&Y, solid wedge, UL-listed. Stockham B-133. Nibco T-104-0.

7 Flanged Ends 2½" and Larger (GA7): 175 WWP, iron body, bolted bonnet, rising stem, OS&Y, solid wedge, UL listed. Stockham G-634. Nibco F-607-0TS

8 Threaded Ends 2" and Smaller (GA8): Class 200, bronze body, union bonnet, rising stem, solid wedge, renewable seat. Stockham B-132. Nibco T-154-SS. Milwaukee 1174.

9 Flanged Ends 2½" and Larger (GA9): Class 250, iron body bronze mounted, bolted bonnet, rising stem, OS&Y, solid wedge. Stockham F-667. Nibco F-667-0. Crane 7½E. Milwaukee F-2894.

10 Threaded Ends 2" and Smaller (GA10): Class 300, bronze body, union bonnet, rising stem, solid wedge, renewable seat. Stockham B-145. Nibco T-174-SS. Crane 634E.

Milwaukee 1184.

11 Flanged Ends 2½" and Larger (GA11): Class 300, cast steel body, bolted bonnet, rising stem, solid wedge, seal-welded seat rings. Provide trim to match use. Stockham 30-0F. Crane 33.

12 Flanged Ends 2½" and Larger (GA12): 300 WWP, iron body, bolted bonnet, bronze mounted, rising stem, OS&Y, solid wedge, UL-listed. Stockham F-670. Nibco F-697-0.

2.4 Check Valves:

2.4.1 Construction: Construct valves of castings free of any impregnating materials. Construct valves with a bronze regrinding disc with a seating angle of 40° to 45°, unless a composition disc is specified. Provide stop plug as renewable stop for disc hanger, unless otherwise specified. Disc and hanger shall be separate parts with disc free to rotate. Support hanger pins on both ends by removable side plugs.

2.4.2 Comply with the following standards:

Cast Iron Valves: MSS SP-71. Cast Iron Swing Check Valves, Flanged and Threaded Ends.
Bronze Valves: MSS SP-80. Bronze Gate, Globe, Angle and Check Valves.
Steel Valves: ANSI B16.34. Steel Standard Class Valve Ratings.

2.4.3 Types of check (CK) valves:

1 Threaded Ends 2" and Smaller (CK1): Class 125, bronze body, screwed cap, horizontal swing, bronze disc. Stockham B-319. Nibco T-413-BY. Crane 1707. Milwaukee 509.

2 Soldered Ends 2" and Smaller (CK2): Class 125, bronze body, screwed cap, horizontal swing, bronze disc. Stockham B-309. Nibco S-413-B. Crane 1707S. Milwaukee 1509.

3 Flanged Ends 2½" and Larger (CK3): Class 125, iron body, bronze-mounted, bolted cap, horizontal swing, cast-iron or composition disc. Stockham G-931 or G-932 as applicable. Nibco F918-B. Crane 373. Milwaukee F2974 as applicable.

4 Threaded Ends 2" and Smaller (CK4): 200 WWP, bronze body, screwed cap, horizontal swing, regrinding type bronze disc, for fire sprinkler use. Nibco KT-403-W.

5 Flanged Ends 2½" and Larger (CK5): 175 WWP, iron body, bolted cap, bronze mounted, composition disc, UL listed, with ball drip if required. Stockham G-940. Nibco F-908-W.

6 Threaded Ends 2" and Smaller (CK6): Class 200, bronze body, screwed cap, Y-pattern swing, regrinding bronze disc. Stockham B-345. Nibco T-453-B. Crane 36. Milwaukee 518/508.

7 Flanged Ends 2½" and Larger (CK7): Class 250, iron body, bronze mounted, bolted cap, cast-iron disc. Stockham F-947. Nibco F-968-B. Crane 39E. Milwaukee F2970.

8 Threaded Ends 2" and Smaller (CK8): Class 300, bronze body, screwed cap, Y-pattern swing, regrinding bronze disc. Stockham B-375. Nibco T-473-B. Crane 76E.

Milwaukee 517/507.

9 Flanged Ends 2½" and Larger (CK9): Class 300, cast steel body, bolted cap, horizontal swing, seal welded seat rings, chromium stainless disc. Stockham 30-SF. Crane 159.

2.5 Ball Valves:

2.5.1 General: Select with port area equal to or greater than connecting pipe area, include seat ring designed to hold sealing material.

2.5.2 Construction: Ball valves shall be rated for 150 psi saturated steam and 600 psi non-shock cold water. Pressure containing parts shall be constructed of ASTM B-584 alloy 844, or ASTM B-124 alloy 377. Valves shall be furnished with blow-out proof bottom loaded stem constructed of ASTM B-371 alloy 694 or other approved low zinc material. Provide TFE packing, TFE thrust washer, chrome-plated ball and reinforced teflon seats. Valves 1" and smaller shall be full port design. Valves 1¼" and larger shall be conventional port design. Stem extensions shall be furnished for use in insulated piping where insulation exceeds ½" thickness.

2.5.3 Comply with the following standards:

MSS SP-72. Ball Valves with Flanged or Butt Welding Ends for General Service.
MSS SP-110. Ball Valves Threaded, Socket-Welding, Solder Joint, Grooved and Flared Ends.

2.5.4 Types of ball (BA) valves:

1 Threaded Ends 2" and Smaller (BA1): Bronze two-piece full port body with adjustable stem packing. Nibco T-585-70. Stockham S216-BR-R-T. Milwaukee BA125. Apollo 77-100.

2 Soldered Ends 2" and Smaller (BA2): Bronze three-piece full port body with adjustable stem packing. Nibco S-595-Y-66. Milwaukee BA350. Apollo 82-200.

3 Threaded Ends 1" and Smaller (BA3): Bronze two-piece full port body, UL listed (UL 842) for use with flammable liquids and LP gas. Nibco T-585-70-UL.

4 Threaded Ends 2" and Smaller (BA4): 175 WWP, bronze two-piece body, UL listed for fire protection service. Nibco KT-585-70-UL and KT-580-70-UL.

5 Threaded Ends 2" and Smaller (BA5): 400 WWP, bronze two-piece body, for fire protection service. Nibco KT-580.

6 Threaded Ends 2½" and Smaller (BA6): 300 WWP, bronze three-piece body, gear operator with handwheel, indicator flag, accepts tamper switch, for fire protection, UL listed. Nibco T-505-4 and G-505-4.

7 Flanged Ends 2½" and Larger (BA7): Class 150, carbon steel full bore two-piece body with adjustable stem packing. Nibco F515-CS series. Apollo 88-240.

2.6 Butterfly Valves:

2.6.1 General: Comply with MSS SP-67, Butterfly Valves. Provide butterfly valves designed for tight shut-off. Where used for terminal or equipment removal or repair, select lug type valves. Select wafer type valves for other applications. Provide gear operators on all butterfly valves 6" and larger.

2.6.2 Types of butterfly (BF) valves:

1 Wafer Type 3" and Larger (BF1): 200 CWP, cast-iron body, lever-operated, cadmium-plated ductile iron disc, Type 410 stainless steel stem, EPT seat. Stockham LG-512. Nibco WD 2110-3. Crane 42-FXB-TL. Milwaukee MW222E-8416.

2 Lug Type 3" and Larger (BF2): 200 CWP, cast-iron body, lever-operated, cadmium-plated ductile iron disc, Type 410 stainless steel stem, EPT seat. Stockham LG-712. Nibco LD 2110-3. Crane 44-FXB-TL. Milwaukee ML132B-8416.

3 Wafer Type 3" and Larger (BF3): 150/200 CWP, cast-iron body, gear-operated, cadmium-plated ductile iron disc, Type 410 stainless steel stem, EPT seat. Stockham LG-522 and LG-521. Nibco WD 2110-5. Crane 42-FXB-G. Milwaukee MW 122B-8115.

4 Lug Type 3" and Larger (BF4): 150/200 CWP, cast-iron body, gear-operated, cadmium-plated ductile iron disc, Type 410 stainless steel stem, EPT seat. Stockham LG-722 and LG-721. Nibco LD 2110-5. Crane 44-FXB-G. Milwaukee ML 132B-8115.

5 Wafer Type 4" and Larger (BF5): 175 WWP, cast-iron body, gear-operated, nickel-plated ductile iron disc, Type 410 stainless steel stem, EPT seat, UL listed. Stockham LG-52U. Nibco WD 3510-8.

6 Lug Type 4" and Larger (BF6): 175 WWP, cast-iron body, gear-operated, nickel-plated ductile iron or aluminum bronze disc, Type 410 stainless steel stem, EPT seat, UL listed. Stockham LG-72U. Nibco LD 3510-8.

7 Grooved Type 4" and Larger (BF7): 175 WWP, cast-iron body, gear-operated, nickel-plated ductile iron or aluminum bronze disc, Type 410 stainless steel stem, EPT seat, UL listed. Stockham LG-82U. Nibco GD 1765-2.

2.7 Valve Features:

2.7.1 General: Provide valves with features indicated and, where not otherwise indicated, provide proper valve features as determined by Installer for installation requirements. Comply with ANSI B31.1

2.7.2 Valve features specified or required shall comply with the following:

1 Flanged: Provide valve flanges complying with ANSI B16.1 (cast iron), ANSI B16.5 (steel), or ANSI B16.24 (bronze).

2 Threaded: Provide valve ends complying with ANSI B2.1.

3 Solder-Joint: Provide valve ends complying with ANSI B16.18.

4 Trim: Fabricate pressure-containing components of valve, including stems (shafts) and seats from brass or bronze materials, of standard alloy recognized in valve manufacturing industry unless otherwise specified.

5 Non-Metallic Disc: Provide non-metallic material selected for service indicated in accordance with manufacturer's published literature.

6 Renewable Seat: Design seat of valve with removable disc, and assemble valve so disc can be replaced when worn.

7 Extended Stem: Increase stem length by 2" minimum, to accommodate insulation applied over valve.

3 EXECUTION

3.1 Installation:

3.1.1 General: Install valves where required for proper operation of piping and equipment, including valves in branch lines to isolate sections of piping. Locate valves so as to be accessible and so that separate support can be provided when necessary. Install valves with stems pointed up, in vertical position where possible, but in no case with stems pointed downward below horizontal plane.

3.1.2 Insulation: Where insulation is indicated, install extended-stem valves, arranged in proper manner to receive insulation.

3.1.3 Applications Subject to Corrosion: Do not install bronze valves and valve components in direct contact with steel, unless bronze and steel are separated by dielectric insulator.

3.2 Selection of Valve Ends (Pipe Connections): Except as otherwise indicated, select and install valves with the following ends or types of pipe/tube connections:

3.2.1 Tube Size 2" and Smaller: Threaded valves. Soldered-joint valves may also be used.

3.2.2 Pipe Size 2" and Smaller: Threaded valves.

3.2.3 Pipe Size 2½" and Larger: Flanged valves.

3.3 Non-Metallic Disc: Limit selection and installation of valves with non-metallic disc to locations indicated and where foreign material in piping system can be expected to prevent tight shutoff of metal seated valves.

3.4 Renewable Seats: Select and install valves with renewable seats, except where otherwise indicated.

3.5 Installation of Check Valves: Install in horizontal position with hinge pin horizontally perpendicular to center line of pipe. Install for proper direction flow.

END OF SECTION

SECTION 23 05 29 - SUPPORTS, ANCHORS, AND SEALS

1 GENERAL

1.1 Drawings and general provisions of Contract, including General Supplementary Conditions and Division-1 Specification sections, apply to work of this section.

1.2 This section is a Division-23 Basic Materials and Methods section, and is a part of each Division-23 section making reference to or requiring supports, anchors, and seals specified herein.

1.3 Extent of supports, anchors, and seals required by this section is indicated on drawings and/or specified in other Division-23 sections.

1.4 Code Compliance: Comply with applicable codes pertaining to product materials and installation of supports, anchors, and seals.

1.5 MSS Standard Compliance:

1.5.1 Provide pipe hangers and supports of which materials, design, and manufacture comply with ANSI/MSS SP-58.

1.5.2 Select and apply pipe hangers and supports, complying with MSS SP-69.

1.5.3 Fabricate and install pipe hangers and supports, complying with MSS SP-89.

1.5.4 Terminology used in this section is defined in MSS SP-90.

1.6 UL Compliance: Provide products which are Underwriters Laboratories listed .

2 PRODUCTS

2.1 Acceptable Manufacturers: Subject to compliance with requirements, provide supports and hangers by Grinnel, Michigan Hanger Company, B-Line Systems, or approved equal.

2.2 Horizontal-Piping Hangers and Supports: Except as otherwise indicated, provide factory-fabricated horizontal-piping hangers and supports complying with ANSI/MSS SP-58, of one of the following MSS types listed, selected by Installer to suit horizontal-piping systems, in accordance with MSS SP-69 and manufacturer's published product information. Use only one type by one manufacturer for each piping service. Select size of hangers and supports to exactly fit pipe size for bare piping, and to exactly fit around piping insulation with saddle or shield for insulated piping. Provide copper-plated hangers and supports for copper-piping systems.

2.2.1 Adjustable Steel Clevises: MSS Type 1.

2.2.2 Steel Double Bolt Pipe Clamps: MSS Type 3.

2.2.3 Adjustable Steel Band Hangers: MSS Type 7.

2.2.4 Steel Pipe Clamps: MSS Type 4.

2.2.5 Pipe Stanchion Saddles: MSS Type 37, including steel pipe base support and cast-iron floor flange.

2.2.6 Single Pipe Rolls: MSS Type 41.

2.2.7 Adjustable Roller Hanger: MSS Type 43.

2.2.8 Pipe Roll Stands: MSS Type 44 or Type 47.

2.3 Vertical-Piping Clamps: Except as otherwise indicated, provide factory-fabricated vertical-piping clamps complying with ANSI/MSS SP-58, of one of the following MSS types listed, selected by Installer to suit vertical piping systems, in accordance with MSS SP-69 and manufacturer's published product information. Select size of vertical piping clamps to exactly fit pipe size of bare pipe. Provide copper-plated clamps for copper-piping systems.

2.3.1 Two-Bolt Riser Clamps: MSS Type 8.

2.3.2 Four-Bolt Riser Clamps: MSS Type 42.

2.4 Hanger-Rod Attachments: Except as otherwise indicated, provide factory-fabricated hanger-rod attachments complying with ANSI/MSS SP-58, of one of the following MSS types listed, selected by Installer to suit horizontal-piping hangers and building attachments, in accordance with MSS SP-69 and manufacturer's published product information. Use only one type by one manufacturer for each piping service. Select size of hanger-rod attachments to suit hanger rods. Provide copper-plated hanger-rod attachments for copper-piping systems.

2.4.1 Steel Turnbuckles: MSS Type 13.

2.4.2 Malleable Iron Sockets: MSS Type 16.

2.5 Building Attachments: Except as otherwise indicated, provide factory-fabricated building attachments complying with ANSI/MSS SP-58, of one of the following MSS types listed, selected by Installer to suit building substrate conditions, in accordance with MSS SP-69 and manufacturer's published product information. Select size of building attachments to suit hanger rods.

2.5.1 Center Beam Clamps: MSS Type 21.

2.5.2 C-Clamps: MSS Type 23.

2.5.3 Malleable Beam Clamps: MSS Type 30.

2.5.4 Side Beam Brackets: MSS Type 34.

2.5.5 Concrete Inserts: MSS Type 18.

2.6 Saddles and Shields: Except as otherwise indicated, provide saddles or shields under piping hangers and supports, factory-fabricated, for all insulated piping. Size saddles and shields for exact fit to mate with pipe insulation.

2.6.1 Protection Shields: MSS Type 40; of length recommended by manufacturer to prevent crushing of insulation.

2.6.2 Protection Saddles: MSS Type 39; use with rollers, fill interior voids with segments of insulation matching adjoining insulation.

2.7 Miscellaneous Materials:

2.7.1 Metal Framing: Provide products complying with NEMA STD ML 1.

2.7.2 Steel Plates, Shapes and Bars: Provide products complying with ANSI/ASTM A 36.

2.7.3 Cement Grout: Portland cement (ANSI/ASTM C 150, Type I or Type III) and clean uniformly graded, natural sand (ANSI/ASTM C 404, Size No. 2). Mix at a ratio of 1.0 part cement to 3.0 parts sand, by volume, with minimum amount of water required for placement and hydration.

2.7.4 Heavy-Duty Steel Trapezes: Fabricate from steel shapes or continuous channel struts selected for loads required; weld steel in accordance with AWS standards.

3 EXECUTION

3.1 Preparation

3.1.1 Proceed with installation of hangers, supports and anchors only after required building structural work has been completed in areas where the work is to be installed. Correct inadequacies including (but not limited to) proper placement of inserts, anchors and other building structural attachments.

3.1.2 Prior to installation of hangers, supports, anchors and associated work, Installer shall meet at project site with Contractor, installer of each component of associated work, and installers of other work requiring coordination with work of this section for purpose of reviewing material selections and procedures to be followed in performing the work in compliance with requirements specified.

3.2 Installation of Building Attachments:

3.2.1 Install building attachments at required locations within concrete or on structural steel for proper piping support. Space attachments within maximum piping span length indicated in MSS SP-69. Install additional building attachments where support is required for additional concentrated loads, including valves, flanges, guides, strainers, expansion joints, and at changes in direction of piping. Install concrete inserts before concrete is placed; fasten insert securely to forms. Where concrete with compressive strength less than 2500 psi is indicated, install reinforcing bars through openings at top of inserts.

3.2.2 In areas of work requiring attachments to existing concrete, use self drilling rod inserts, Phillips Drill Co., "Red-Head" or equal.

3.3 Installation of Hangers and Supports:

3.3.1 General: Install hangers, supports, clamps and attachments to support piping properly from building structure; comply with MSS SP-69. Arrange for grouping of parallel runs of

horizontal piping to be supported together on trapeze type hangers where possible. Install supports with maximum spacings complying with MSS SP-69 or as listed herein, whichever is most limiting. Where piping of various sizes is to be supported together by trapeze hangers, space hangers for smallest pipe size or install intermediate supports for smaller diameter pipe. Do not use wire or perforated metal to support piping, and do not support piping from other piping.

3.3.1.1 Horizontal steel pipe and copper tube 1-1/4" diameter and smaller: support on 6 foot centers.

3.3.1.2 Horizontal steel pipe and copper tube 1-1/2" diameter and larger: support on 10 foot centers.

3.3.1.3 Vertical steel pipe and copper tube: support at each floor.

3.3.1.4 Plastic pipe: support in accordance with manufacturer's recommendations.

3.3.1.5 Fire protection piping: support in accordance with NFPA 13.

3.3.2 Install hangers and supports complete with necessary inserts, bolts, rods, nuts, washers and other accessories.

3.3.3 Paint all black steel hangers with black enamel. Galvanized steel and copper clad hangers do not require paint.

3.3.4 Prevent electrolysis in support of copper tubing by use of hangers and supports which are copper plated, or by other recognized industry methods.

3.3.5 Provision for Movement:

3.3.5.1 Install hangers and supports to allow controlled movement of piping systems and to permit freedom of movement between pipe anchors, and to facilitate action of expansion joints, expansion loops, expansion bends and similar units.

3.3.5.2 Load Distribution: Install hangers and supports so that piping live and dead loading and stresses from movement will not be transmitted to connected equipment.

3.3.5.3 Pipe Slopes: Install hangers and supports to provide indicated pipe slopes, and so that maximum pipe deflections allowed by ANSI B31 are not exceeded.

3.3.6 Insulated Piping: Comply with the following installation requirements.

3.3.6.1 Shields: Where low-compressive-strength insulation or vapor barriers are indicated, install coated protective shields.

3.3.6.2 Clamps: Attach clamps, including spacers (if any), to piping with clamps projecting through insulation; do not exceed pipe stresses allowed by ANSI B31.

3.3.7 Support fire protection piping independently of other piping.

3.4 Installation of Anchors:

3.4.1 Install anchors at proper locations to prevent stresses from exceeding those permitted by ANSI B31, and to prevent transfer of loading and stresses to connected equipment.

3.4.2 Fabricate and install anchors by welding steel shapes, plates and bars to piping and to structure. Comply with ANSI B31 and with AWS standards.

3.4.3 Anchor Spacings: Where not otherwise indicated, install anchors at ends of principal pipe-runs, at intermediate points in pipe-runs between expansion loops and elbows. Make provisions for preset of anchors as required to accommodate both expansion and contraction of piping.

3.4.4 Where expansion compensators are indicated, install anchors in accordance with expansion unit manufacturer's written instructions to limit movement of piping and forces to maximums recommended by manufacturer for each unit.

3.5 Equipment Bases:

3.5.1 Concrete housekeeping bases will be provided as work of Division 3. Furnish to Contractor scaled layouts of all required bases, with dimensions of base, and location to column center lines. Furnish templates, anchor bolts, and accessories necessary for base construction.

4.6.1 Provide concrete housekeeping bases for all floor mounted equipment furnished as part of the work of Division 23. Size bases to extend minimum of 4" beyond equipment base in any direction; and 4" above finished floor elevation. Construct of reinforced concrete, roughen floor slab beneath base for bond, and provide steel rod anchors between floor and base. Locate anchor bolts using equipment manufacturer's templates. Chamfer top and edge corners.

END OF SECTION 23 05 29

THIS PAGE INTENTIONALLY LEFT BALNK

SECTION 23 05 48 - VIBRATION ISOLATION

1 GENERAL

1.1 Drawings and general provisions of Contract, including General and Supplementary Conditions and Division-1 Specification sections, apply to work of this section.

1.2 This section is a Division-23 Basic Mechanical Materials and Methods section, and is part of each Division-23 section making reference to vibration isolation equipment.

1.3 Extent of vibration isolation required by this section is indicated on drawings and/or specified in other Division-23 sections.

1.4 Approval Submittals: When required by other Division-23 sections, submit product data sheets for each type of vibration isolation equipment including configuration and rating data. Submit with Division-23 section using vibration isolation, not as a separate submittal. Provide calculations showing supported weight, deflection, and isolator size and type for each item of supported equipment. Submit for:

Equipment Mountings. Type EM.
Hangers. Type HA.
Bases and Frames. Type BF.

1.5 O&M Data Submittals: Submit a copy of approval submittals for each type of vibration isolation equipment. Include this data in O&M Manual.

2 PRODUCTS

2.1 General: Provide factory-fabricated products recommended by manufacturer for use in service indicated. Provide products of types and deflections indicated; provide proper selection as determined by Installer to comply with specifications and installation requirements. Provide sizes which properly fit with equipment. All metal parts installed outside shall be hot dipped galvanized after fabrication.

2.2 Acceptable Manufacturers: Subject to compliance with requirements, provide vibration isolation equipment of: Mason Industries, Keflex, Consolidated Kinetics, Vibration Mountings & Controls, Wheatley or approved equal. All vibration isolators shall be supplied by a single approved manufacturer.

2.3 Equipment Mountings:

2.3.1 Select mountings with the required deflection and fastening means. Provide steel rails or bases as required to compensate for equipment rigidity and overhang.

2.3.2 Types of equipment mountings (EM):

1 Spring Mountings (EM1): Spring isolators shall be free-standing and laterally stable without any housing. All mounts shall have leveling bolts. Spring diameter shall be not less than 0.8 of the compressed height of the spring at rated load. Springs shall have a minimum additional travel to solid equal to 50% of the rated deflection. Springs shall be so designed that the ratio of horizontal stiffness to vertical stiffness is approximately one. Provide a nominal static deflection of at least 1.0". Basis of

Design: Mason Industries SLFH.

2 Spring Mountings with Housings (EM2): Spring isolators shall consist of open, stable steel springs and include vertical travel limit stops to control extension when weight is removed. The housing of the spring unit shall serve as blocking during erection of equipment. Provide a nominal static deflection of at least 1.0". All mountings used outside shall be hot dipped galvanized. Basis of Design: Mason Industries SLR.

3 Spring Mountings with Housings (EM3): Spring isolators shall consist of open, stable steel springs with neoprene inserts to limit movement between upper and lower housing on start and stop. Provide a nominal static deflection of at least 1.0". Mountings shall be specifically designed for critical areas on light-weight floors. Basis of Design: Mason Industries C.

4 Neoprene Mountings (EM4): Double deflection neoprene-in-shear mountings shall have a minimum static deflection of 0.35". All metal surfaces shall be neoprene covered. The top and bottom surfaces shall be neoprene ribbed and bolt holes shall be provided in the base. Basis of design: Mason Industries ND.

5 Pads (EM5): Waffle or ribbed pattern neoprene pads shall be fabricated from 40-50 durometer neoprene. Provide rigid steel plate and mounting angles as required. Basis of design: Mason Industries Super W.

2.4 Hangers:

2.4.1 Select hangers with the required deflection. Provide all required hanger rods and fasteners.

2.4.2 Types of hangers (HA):

1 Hangers (HA1): Vibration hangers shall contain a steel spring set in a neoprene cup manufactured with a grommet to prevent short-circuiting of the hanger rod. The cup shall contain a steel washer designed to properly distribute the load on the neoprene and prevent its extrusion. Spring diameters and hanger box lower-hole sizes shall be large enough to permit the hanger rod to swing through a 30-degree arc before contacting the hole and short circuiting the spring. Springs shall have a minimum additional travel to solid equal to 50% of the rated deflection. Basis of Design: Mason Industries 30.

2 Hangers (HA2): Vibration hangers shall contain a laterally stable steel spring and 0.3" deflection neoprene or fiberglass element in series. A neoprene neck shall be provided where the hanger rod passes through the steel box supporting the isolator mount to prevent metal to metal contact. Spring diameters and hanger box lower hole sizes shall be large enough to permit the hanger rod to swing through a 30 degree arc before contacting the hole and short circuiting the spring. Springs shall have a minimum additional travel to solid equal to 50% of the rated deflection. Basis of Design: Mason Industries 30N.

3 Hangers (HA3): Double deflection neoprene-in-sheer or EPDM hangers. Units shall be complete with projected neoprene bushing to prevent steel-to-steel contact between hanger box and hanger rod. Average static deflection shall be not less than 0.4 inches. Basis of Design: Mason Industries HD.

2.5 Bases and Frames (BF):

2.5.1 Select mounting bases and frames as required for equipment dimensions, service access and fastening means. Provide all fasteners. Coordinate and provide required vibration isolators to match mounting bases and frames.

2.5.2 Types of bases and frames (BF):

1 Steel Base Frame for Floor-Mounted Equipment (BF1): Provide frames consisting of structural steel sections sized, spaced and connected to form a rigid base which will not twist, rack, deform or deflect in any manner that will negatively affect the operation of the supported equipment or the performance of the vibration-isolation mounts. Frames shall be of adequate size and plan form to support basic equipment units and motors plus any associated pipe elbow or duct elbow supports and electrical control elements or other components closely related and requiring resilient support in order to prevent vibration transfer from equipment to the building structure. Frames shall include side mounting brackets for attachment to vibration isolation floor mounts. The clearance between the underside of any frame or mounted equipment unit and the top of the building structure below shall be at least 2 inches. Basis of Design: Mason Industries WFSL.

2 Concrete Inertia Block for Floor-Mounted Equipment (BF2): Provide concrete inertia blocks formed of stone-aggregate concrete (150 lbs./cu.ft.) cast between appropriate steel reinforcing perimeter structural steel channels. Inertia block thickness shall be not less than 1/12 the longest dimension of the mounted equipment or equipment assembly. Inertia blocks shall be built to form a rigid base which will not twist, rack, deform, deflect or crack in any manner that will negatively affect the operation of the supported equipment or the performance of the vibration-isolation mounts. Inertia blocks shall be of adequate size and plan form to support basic equipment units and motors plus any associated pipe or duct elbow supports, electrical control elements or other components closely related and requiring resilient support in order to prevent vibration transfer from equipment to the building structure. Inertia blocks shall include side mounting bracket pockets for spring mounting. The clearance between the underside of any inertia block and the top of the building structure below shall be at least 2 inches. The vibration isolator supplier may furnish the structural steel perimeter frame, including reinforcing and anchor bolts. Basis of Design: Mason Industries KSL/BMK.

3 Steel Rails (BF3): Provide steel rails of channels or angles with vibration isolators as required. Basis of Design: Mason Industries, RND or RC.

4 Vibration Isolation Base for Rooftop Equipment (BF4): Provide aluminum vibration isolation bases that fit over roof curb and under the equipment. Provide spring isolators having a 1" minimum static deflection, resilient snubbers for wind resistance, closed cell weather seal at top and bottom, and EDPM flexible connection around entire perimeter. The unit shall provide a water-tight system. Basis of Design: Mason Industries CMAB.

5 Vibration Isolation Curb for Rooftop Equipment (BF5): Provide steel spring isolation curb with cadmium or zinc electroplated steel springs on ¼" thick neoprene pads to support the upper frame. The upper frame must provide continuous support for the equipment and must be held captive by ¼" thick neoprene snubber bushings.

Minimum spring deflection is 1½" 2½". Provide galvanized steel counter-flashing and EPDM bellows for the corners. Provide access covers for all springs. The entire assembly shall be waterproof. Curbs shall be a minimum of 12" high and shall include 2" thick insulation. Provide curbs designed to accommodate for roof pitch so that equipment is set level.

Provide perimeter angle and cross members with two layers of e" waterproof sheetrock at the floating member of the curb. Stagger sheetrock joints. Sheetrock must completely surround all ducts and shall be caulked. Where the mechanical arrangement prevents attaching to the floating member, the barrier shall be attached as high as possible on the fixed curb with 1" thick closed cell neoprene flexible seals around the ducts. A 4" layer of 1.5 pcf fiberglass shall cover the entire solid roof surface under the unit. Basis of Design: Mason Industries RSC-dB.

3 EXECUTION

3.1 Install vibration isolation devices for the duty indicated and for ease of inspection, adjustment, and proper operation. Install in accordance with the manufacturer's written instructions and coordinate with shop drawings of supported equipment.

3.2 All connections to fixtures and equipment shown on the drawings shall be considered diagrammatic unless otherwise indicated by detail. The actual connections shall be made to fully suit the requirements of each case and adequately provide for expansion and servicing.

3.3 Piping, ductwork and conduit shall not be suspended from one another or physically contact one another. Vibrating systems shall be kept free from non-vibrating systems.

3.4 Equipment Mountings:

3.4.1 Unless otherwise shown or specified, all floor-mounted equipment shall be set on housekeeping equipment bases. Refer to Division-23 section “Supports, Anchors, and Seals”.

3.4.2 No equipment unit shall bear directly on vibration isolators unless its own frame is suitably rigid to span between isolators, and such direct support is approved by the equipment manufacturer. All support frames shall be sufficiently stiff and rigid so as to prevent distortion and misalignment of components installed thereon.

3.4.3 Align equipment mountings for a free, plumb installation. Isolators that are binding, offset or fully compressed will not be accepted.

3.5 Hangers:

3.5.1 Position vibration isolation hangers so that hanger housing may rotate a full 360 degrees without contacting any object.

3.5.2 Install steel angles, channels, rods and fasteners to level equipment, piping or ductwork and to evenly distribute the supported weight.

3.6 Bases and Frames:

3.6.1 Unless otherwise indicated, all equipment mounted on vibration-isolated bases shall have a minimum operating clearance of 2 inches between the structural steel frame and the concrete housekeeping pad or floor beneath the equipment. The clearance space shall be checked to ensure that no construction debris has been left to short-circuit or restrict the proper operation of the vibration isolation system.

3.7 Connections of Ducts: Ducts shall be connected to fan intakes and discharges by means of flexible connectors in accordance with Division-23 section "Ductwork Accessories" so that all vibrating equipment is fully isolated.

END OF SECTION 23 05 48

THIS PAGE INTENTIONALLY LEFT BLANK

SECTION 23 05 53 - MECHANICAL IDENTIFICATION

1 GENERAL

1.1 Drawings and general provisions of Contract, including General and Supplementary Conditions and Division-1 Specification sections, apply to work of this section.

1.2 This section is a Division-23 Basic Mechanical Materials and Methods section, and is part of each Division-21, 22, and 23 section making reference to or requiring identification devices specified herein.

1.3 Extent of mechanical identification work required by this section is indicated on drawings and/or specified in other Division-21, 22, and 23 sections.

1.4 Refer to Division-26 sections for identification requirements of electrical work; not work of this section. Refer to other Division-23 sections for identification requirements for controls; not work of this section.

1.5 Codes and Standards: Comply with ANSI A13.1 for lettering size, length of color field, colors, and viewing angles of identification devices.

2 PRODUCTS

2.1 General: Provide manufacturer's standard products of categories and types required for each application as referenced in other Division-21, 22, or 23 sections. Where more than single type is specified for application, selection is Installer's option, but provide single selection for each product category.

2.2 Painted Identification Materials

2.2.1 Stencils: Standard fiberboard stencils, prepared for required applications with letter sizes generally complying with recommendations of ANSI A13.1 for piping and similar applications, but not less than 1-¼" high letters for ductwork and not less than ¾" high letters for access door signs and similar operational instructions.

2.2.2 Stencil Paint: Standard exterior type stenciling enamel; black, except as otherwise indicated; either brushing grade or pressurized spray-can form and grade.

2.2.3 Identification Paint: Standard identification enamel.

2.3 Plastic Pipe Markers

2.3.1 Pressure-Sensitive Type: Provide manufacturer's standard pre-printed, permanent adhesive, color-coded, pressure-sensitive vinyl pipe markers.

2.3.1.1 Lettering: Manufacturer's standard pre-printed nomenclature which best describes piping system in each instance, as selected by Architect/Engineer in cases of variance with name as shown or specified.

2.3.1.2 Arrows: Print each pipe marker with arrows indicating direction of flow, either integrally with piping system service lettering (to accommodate both directions), or as separate unit of plastic.

2.4 Valve Tags:

2.4.1 Brass Valve Tags: Provide 19-gage polished brass valve tags with stamp-engraved piping system abbreviation in ¼" high letters and sequenced valve numbers ½" high, and with 5/32" hole for fastener. Provide 1-½" diameter tags, except as otherwise indicated.

2.4.2 Plastic Laminate Valve Tags: Provide manufacturer's standard 3/32" thick engraved plastic laminate valve tags, with piping system abbreviation in ¼" high letters and sequenced valve numbers ½" high, and with 5/32" hole for fastener. Provide 1-½" square black tags with white lettering, except as otherwise indicated.

2.5 Engraved Plastic-Laminate Signs:

2.5.1 General: Provide engraving stock melamine plastic laminate, in the sizes and thicknesses indicated, engraved with engraver's standard letter style a minimum of 3/4" tall and wording indicated, punched for mechanical fastening except where adhesive mounting is necessary because of substrate.

2.5.2 Thickness: 1/16" for units up to 20 sq. in. or 8" length; 1/8” for larger units.

2.5.3 Fasteners: Self-tapping stainless steel screws, except contact-type permanent adhesive where screws cannot or should not penetrate the substrate.

2.5.4 Ceiling Grid Mounted Tags: White, 1/2” lettering engraved in a ¾” black background, screwed parallel to the ceiling grid.

2.6 Stamped Nameplates: Provide equipment manufacturer's standard stamped nameplates for motors, AHUs, pumps, etc.

3 EXECUTION

3.1 Coordination: Where identification is to be applied to surfaces which require insulation, painting or other covering or finish, including valve tags in finished mechanical spaces, install identification after completion of covering and painting. Install identification prior to installation of acoustical ceilings and similar removable concealment.

3.2 Ductwork Identification:

3.2.1 General: Identify air supply, return, exhaust, intake and relief ductwork with stenciled signs and arrows, showing ductwork service and direction of flow, in black or white.

3.2.2 Location: In each space where ductwork is exposed, or concealed only by removable ceiling system, locate signs near points where ductwork originates or continues into concealed enclosures, and at 50' spacings along exposed runs.

3.2.3 Access Doors: Provide stenciled signs on each access door in ductwork and housings, indicating purpose of access (to what equipment) and other maintenance and operating instructions, and appropriate and procedural information.

3.3 Piping System Identification:

3.3.1 General: Install pipe markers of one of the following types on each system indicated to receive identification, and include arrows to show normal direction of flow:

3.3.1.1 Plastic pipe markers.

3.3.1.2 Stenciled markers, black or white for best contrast.

3.3.2 Locate pipe markers as follows wherever piping is exposed to view in occupied spaces, machine rooms, accessible maintenance spaces and exterior non-concealed locations.

3.3.2.1 Near each valve and control device.

3.3.2.2 Near each branch, excluding short take-offs for fixtures and terminal units; mark each pipe at branch, where there could be question of flow pattern.

3.3.2.3 Near locations where pipes pass through walls, floors, ceilings, or enter non-accessible enclosures.

3.3.2.4 At access doors, manholes and similar access points which permit view of concealed piping.

3.3.2.5 Near major equipment items and other points of origination and termination.

3.3.2.6 Spaced intermediately at maximum spacing of 50' along each piping run, except reduce spacing to 25' in congested areas of piping and equipment.

3.3.2.7 On piping above removable acoustical ceilings, except omit intermediately spaced markers.

3.3.3 The following piping shall be color-coded where exposed in mechanical and electrical rooms by completely painting the piping with the indicated color. Use standard colors where exposed in finished spaces. Use standard identification methods in concealed areas.

Fire protection piping - Red

3.4 Valve Identification: Provide a permanently affixed coded valve tag on every valve, cock and control device in each piping system; exclude check valves, valves within factory-fabricated equipment units, plumbing fixture faucets, convenience and lawn-watering hose bibs, and shut-off valves at plumbing fixtures, HVAC terminal devices and similar rough-in connections of end-use fixtures and units. Coordinate code with operating instructions.

3.5 Valve Charts: Provide framed, glass covered valve charts in each mechanical room. Identify coded valve number, valve function, and valve location for each valve.

3.6 Mechanical Equipment Identification: Install engraved plastic laminate sign on a vertical surface on or near each major item of mechanical equipment and each operational device. Label shall indicate type of system and area served. Provide signs for the following general categories of equipment and operational devices:

3.6.1 Main control and operating valves, including safety devices.

3.6.2 Meters, gauges, thermometers and similar units.

3.6.3 Pumps, compressors, chillers, condensers, and similar equipment.

3.6.4 Heat exchangers, coils, evaporators, cooling towers, heat recovery units and similar equipment.

3.6.5 Fans, blowers, primary balancing dampers and VAV boxes.

3.6.6 HVAC air handlers and fan coil units.

3.6.7 Tanks and pressure vessels.

3.6.8 Air conditioning indoor and outdoor units.

3.7 Stamped Nameplates: Equipment manufacturers to provide standard stamped nameplates on all major equipment items such as motors, pumps, AHUs, etc. Where motors are hidden from view (within equipment casing, or otherwise not easily accessible, etc.), the equipment supplier shall furnish a duplicate motor data nameplate to be affixed to the equipment casing in an easily visible location, unless data is already included on the equipment nameplate.]

3.8 Adjusting and Cleaning:

3.8.1 Adjusting: Relocate any mechanical identification device which has become visually blocked by work of this division or other divisions.

3.8.2 Cleaning: Clean face of identification devices.

END OF SECTION 23 05 53

SECTION 23 05 56 - ACCESS DOORS

1 GENERAL

1.1 Drawings and general provisions of Contract, including General and Supplementary Conditions and Division-1 Specification sections, apply to work of this section.

1.2 This section is a Division-23 Basic Mechanical Materials and Methods section, and is part of each Division-21, 22, and 23 section making reference to or requiring access panels specified herein.

1.3 Approval Submittals:

1.3.1 Product Data: When required by other Division-21, 22, or 23 sections, submit product data for access doors. Submit with Division-21, 22, or 23 section using access doors, not as a separate submittal. Include rating data.

1.4 O&M Data Submittals: Submit a copy of approval submittal. Include this data in O&M Manuals.

2 PRODUCTS

2.1 Acceptable Manufacturers: Subject to compliance with requirements, provide access doors by Acudor, Milcor, Jay R. Smith, Zurn, BOICO, Elmdor, or approved equal.

2.2 General: Where floors, walls and ceilings must be penetrated for access to mechanical work, provide types of access doors indicated. Furnish sizes indicated or, where not otherwise indicated, furnish adequate size for intended and necessary access. Furnish manufacturer's complete units, of type recommended for application in indicated substrate construction, in each case, complete with anchorages and hardware.

2.3 Access Door Construction: Except as otherwise indicated, fabricate wall/ceiling door units of welded steel construction with welds ground smooth; 16-gauge frames and 14-gauge flush panel doors; 175° swing with concealed spring hinges; flush screw-driver-operated cam locks; factory-applied rust-inhibitive prime-coat paint finish.

2.4 Locks: Where indicated, provide flat pass key type 5-pin or 5-disc type cylinder locks, individually keyed unless otherwise indicated, 2 keys.

2.5 Locks: Provide Folger Adams or approved equal Model 415-6 high security deadlock six lever Number 12. All access doors shall be keyed the same throughout. Coordinate with the General Contractor.

2.6 Fire Rated Access Doors: Where required furnish with 20-gauge insulated sandwich panel, automatic closing mechanism, cylinder type lock (self-latching with inside release mechanism), and continuous concealed steel hinge pin. Access doors shall carry the UL 1-½ hour "B" label.

2.7 Insulated Access Doors: Provide 1.0” double wall insulated, hinged access doors. Provide

20 gauge satin coat steel door panels with 0.060” extruded aluminum door panel frames and 0.080” extruded aluminum flanged frame. Provide 0.75 PCF fiberglass insulation sandwiched between inner and outer panel. Provide extruded EDPM or closed cell neoprene draft seal gasket, zinc plated steel continuous hinge. Provide dual acting compression lever type handles, operable from either side of the door. Provide 2 handles for doors 48” tall or less. Provide 3 handles for doors over 48” tall.

3 EXECUTION

3.1 Access doors shall be installed to operate and service all mechanical equipment including valves, dampers, duct access panels, and other items requiring maintenance that are concealed above or behind finished construction. Access doors shall be installed in walls, chase and floors as necessary, but are not required in accessible suspended ceiling systems. Access doors shall have factory applied protective phosphate coating and baked enamel primer suitable for field painting.

3.2 Access doors shall be installed by the Division installing the substrate construction. However, responsibility for furnishing and determining location of access doors is part of this Division's work. The style of access door shall be suitable for construction into which installed.

3.3 Access doors shall be sized and located as required to provide proper maintenance and service access in accordance with the manufacturer's recommendations and code authority requirements for all devices and equipment.

END OF SECTION

SECTION 23 05 90 - START-UP REQUIREMENTS FOR HEATING, VENTILATING, & AIR CONDITIONING (HVAC) SYSTEMS

1 GENERAL

1.1 Intent: It is the intent of this section to require that the startup requirements and report noted herein be performed prior to starting TAB work on each system. Work can be phased with permission of the Engineer.

1.2 Coordination:

1.2.1 The Contractor shall furnish to the TAB Contractor a complete set of plans, specifications, addenda, shop drawings, equipment performance data sheets, change orders, etc. as requested by the TAB Contractor.

1.2.2 The Contractor shall participate in a TAB coordination meeting to discuss interface requirements with the TAB Contractor and to establish a schedule for TAB work prior to start of TAB work.

1.3 Test Reports and Verification Submittals:

1.3.1 Submit Startup Report as described herein for each system. Attach Factory Startup Report for equipment as required by other Division-23 sections.

2 PRODUCTS: None

3 EXECUTION:

3.1 The TAB work shall not commence until the Engineer has received written notice from the Contractor that HVAC systems are 100% complete and are fully operational. Submit Startup Report as described herein.

3.2 The Contractor shall place all HVAC systems and equipment into complete operation during each working day of TAB work.

3.3 The Contractor shall provide access to HVAC systems and equipment by supplying ladders and/or scaffolding, and opening access panels and equipment room doors.

3.4 The TAB Contractor will provide to the Contractor TAB punch lists of non-complying HVAC work as they are discovered. The Contractor shall replace or repair non-complying work as soon as possible in order not to delay completion of TAB work.

3.5 Airside Systems: The Contractor shall provide the following information to the Engineer to substantiate proper start-up and preliminary adjustments of air handler units, belt driven fans, and duct systems.

3.5.1 Verify that air grilles (supply, return, exhaust, transfer, outdoor, etc.) are installed and connected to the duct system.

3.5.2 Verify that duct systems are clean of debris.

3.5.3 Verify that ducts attached with flexible connectors are aligned within ½" and have a uniform gap between ducts of 1"-1.5". Flexible connectors shall not leak and shall be insulated.

3.5.4 Verify that filters are clean and filter spacers are installed.

3.5.5 Verify that balancing dampers at grilles and branch ducts are operational and are fully opened.

3.5.6 Verify that fire and smoke dampers are correctly installed and are fully opened.

3.5.7 Verify that fan discharges are appropriate for the outlet ductwork with regards to the "system effect" per AMCA Publication 201. Inappropriate fan discharges will not be accepted.

3.5.8 Verify proper fan rotation.

3.5.9 Verify proper belt drive alignment.

3.5.10 Verify fan motor overload elements are correctly sized.

3.5.11 Adjust fan sheave until CFM is at or above design CFM. Provide additional sheaves and belts as required. Verify that motor is not overloaded.

3.5.12 Verify that HVAC control systems are fully operational.

3.6 Startup Report: The Contractor shall submit the startup information required by this section to the Engineer in a typed report organized as outlined herein. The Startup Report is required to meet the written notice described herein prior to starting TAB work. TAB work will not start until the Startup Report has been submitted and approved.

END OF SECTION

SECTION 230591 - TESTING, CLEANING, AND STERILIZATION OF PIPING SYSTEMS

1 GENERAL

1.1 Drawings and general provisions of Contract, including General and Supplementary Conditions and Division-1 Specification sections, apply to work of this section.

1.2 This section is a Division-23 Basic Mechanical Materials and Methods section, and is part of each Division-21, 22, and 23 section making reference to or requiring the testing and other procedures specified herein.

1.3 Notify the Architect/Engineer when system tests are ready to be witnessed at least 24 hours prior to the test.

1.4 All materials, test equipment, and devices required for cleaning, testing, sterilizing or purging shall be provided by the Contractor.

2 PRESSURE TESTS

2.1 General: Provide temporary equipment for testing, including pump and gauges. Test piping systems before insulation is installed wherever feasible, and remove control devices before testing. Test each natural section of each piping system independently but do not use piping system valves to isolate sections where test pressure exceeds valve pressure rating. Fill each section with indicated medium and pressurize for indicated pressure and time.

2.2 Required test period is four hours.

2.3 No piping, fixtures, or equipment shall be concealed or covered until they have been tested. The contractor shall apply each test and ensure that it is satisfactory for the period specified before calling the Architect/Engineer to observe the test. Test shall be repeated upon request to the satisfaction of those making the inspection.

2.4 Observe each test section for leakage at the end of the test period. Test fails if leakage is observed or if pressure drop exceeds 5% of the test pressure.

2.5 Check of systems during application of test pressures should include visual check for water leakage and soap bubble or similar check for air and nitrogen leakage.

2.6 During heating and cooling cycles, linear expansion shall be checked at all elbows and expansion joints for proper clearance.

2.7 Repair piping systems sections which fail required piping test. Disassemble and re-install using new materials to extent required to overcome leakage. Do not use chemicals, stop-leak compounds, mastics, or other temporary repair methods.

2.8 Pressure Test Requirements:

2.8.1 Soil, Waste, Vent Test all piping within the building with a 10 foot head of water. Test piping in sections so that all joints are tested. Provide test tees as required.

2.8.2 Domestic Water: Perform hydrostatic test on all piping within the building at twice the normal static pressure at service point, but not less than 100 psig. Once tested, flush out piping and leave under pressure of the supply main or 40 psig for the balance of the construction period.

2.8.3 Fire Sprinkler System: Perform hydrostatic test at 200 psig.

2.8.4 Medical Gases, Air, and Medical Vacuum: Test in accordance with NFPA 99 and related Division 15 sections.

3 CLEANING AND STERILIZATION

3.1 General: Clean exterior surfaces of installed piping systems of superfluous materials, and prepare for application of specified coatings (if any). Flush out piping systems with clean water or blowdown with air before proceeding with required tests. Inspect each run of each system for completion of joints, supports and accessory items.

3.2 Flush and drain all water systems at least three times. Reverse flush systems from smallest piping to largest piping. Replace startup strainers with operating strainers.

3.3 Sterilization of Domestic Water Systems:

3.3.1 Prerequisites: All hot and cold water piping installed (complete), all fixtures connected, system flushed out, and system filled with water.

3.3.2 The shut off valve at the point of connection shall be closed, all fixture outlets opened slightly, and a sterilizing solution shall be introduced at a manifold connection installed by the Contractor at the point of connection.

3.3.3 The solution shall contain 50 parts per million of available chlorine. The chlorinating material shall be either liquid chlorine or calcium hypochlorite. The solution shall be allowed to stand in the system for at least eight hours after which the entire system shall be flushed.

3.3.4 After final flushing, all aerators shall be removed, cleaned, and reinstalled. After final flush the residual chlorine shall not exceed 0.2 parts per million.

3.3.5 The Architect/Engineer shall be notified 24 hours prior to the procedure so that it can be witnessed.

3.3.6 Provide sampling and certified report by an independent testing lab. Provide written Health Department approval of disinfection samples.

3.4 Medical Gas: Purge all medical gas systems in accordance with NFPA 99.

END OF SECTION

SECTION 23 05 93 - TESTING AND BALANCING OF MECHANICAL SYSTEMS

1 GENERAL

1.1 Drawings and general provisions of Contract, including General and Supplementary Conditions and Division-1 Specification sections, apply to work of this section. Division-23 Basic Mechanical Materials Sections apply to work of this section.

1.2 Description of Work:

1.2.1 Extent of testing, adjusting, and balancing work (TAB) is indicated by requirements of this section, and also by drawings and schedules, and is defined to include, but is not necessarily limited to, air distribution systems, hydronic distribution systems and associated equipment and apparatus of mechanical work. The work consists of setting speed and volume (flow) adjusting facilities provided for systems, recording data, conducting tests, preparing and submitting reports, and recommending modifications to work as required.

1.2.2 Coordination: Coordinate with the General Contractor and Mechanical Contractor responsible for the HVAC system installation as required to complete the TAB work.

1.3 The intent of this specification is to balance HVAC systems within the tolerances listed, maintaining the pressure relationships indicated, with a minimum of noise.

1.3.1 Airflow Tolerances:

1.3.1.1 Air Handling: The supply air, return air and outdoor air quantities shall be balanced within ±5% of design values.

1.3.1.2 Exhaust Fans: The exhaust fan quantities shall be set as required to maintain the design exhaust terminal flows within ±5% of design values. If no exhaust terminals exist, exhaust fan air quantities shall be balanced within ±10% of design values.

1.3.1.3 Ceiling Diffusers, Supply Registers, Return and Exhaust Inlets: Balance to an air quantity within ±10% of the design values.

1.3.2 Temperature Tolerances:

1.3.2.1 Air Handling Temperatures: The controlled temperatures at AHUs shall be verified to be under control within ±1ºF of design values.

1.3.2.2 Room Temperatures: Balance systems and controls within ±2ºF of indicated settings.

1.3.3 Pressure Relationships: Where code or design indicates a specific pressure relationship, the pressure relationship shall take precedence over airflow tolerances. Airflow tolerances may need to be held tighter than allowed tolerances to meet pressure relationships. Demonstrate the existence of positive or negative pressure to Engineer and authority having jurisdiction by making direct measurements of room relative pressure and/or flow direction.

1.4 Quality Assurance: The TAB Contractor shall be certified as follows:

1.4.1 Tester: A firm certified by National Environmental Balancing Bureau (NEBB) in those

testing and balancing disciplines required for this project, who is not the Installer of the systems to be tested and is otherwise independent of the project. Comply with NEBB's "Procedural Standards for Testing, Adjusting and Balancing of Environmental Systems" as applicable to this work.

1.4.2 Tester: A firm certified by Associated Air Balance Council (AABC) in those testing and balancing disciplines required for this project. AABC-certified firms are independent by definition. Comply with AABC's Manual MN-1 "AABC National Standards", as applicable to this work.

1.4.3 Industry Standards: Comply with American Society of Heating, Refrigerating and Air-Conditioning Engineers, Inc. (ASHRAE) recommendations pertaining to measurements, instruments and testing, adjusting and balancing, except as otherwise indicated.

1.5 Job Conditions:

1.5.1 Do not proceed with testing, adjusting, and balancing work until HVAC work (including Controls) has been completed and is operable. Ensure that there is no residual work still to be completed.

1.5.2 Do not proceed until work scheduled for testing, adjusting, and balancing is clean and free from debris, dirt and discarded building materials.

1.5.3 Do not proceed until architectural work that would affect balancing (walls, ceiling, windows, doors) have been installed.

1.5.4 Testing may proceed system by system, but each HVAC system must be complete as describe herein.

1.5.5 The mechanical contractor shall make any changes in pulleys, belts, and dampers, and/or add dampers as required for correct balancing.

1.6 Approval Submittals

1.6.1 Submit the name of the proposed test and balance company for the Engineer's approval within thirty (30) days after awarding of contract.

1.7 Test Reports and Verification Submittals:

1.7.1 Submit four (4) copies of the dated test and balance report upon completion of TAB work. The report shall include a list of instruments used for the work. The report shall be signed by the supervisor who performed the TAB work.

2 PRODUCTS

2.1 Patching Materials: Except as otherwise indicated, use same products as used by original Installer for patching holes in insulation, ductwork and housings which have been cut or drilled for test purposes, including access for test instruments, attaching jigs, and similar purposes.

2.2 Test Instruments: Utilize test instruments and equipment of the type, precision, and capacity as recommended in the referenced standard. All instruments shall be in good condition and shall have been calibrated within the previous six (6) months (or more

recently if required by standard).

3 EXECUTION

3.1 General:

3.1.1 Examine installed work and conditions under which testing is to be done to ensure that work has been completed, cleaned and is operable. Do not proceed with TAB work until unsatisfactory conditions have been corrected in manner acceptable to Tester.

3.1.2 Test, adjust and balance environmental systems and components, as indicated, in accordance with procedures outlined in applicable standards, and as modified or detailed herein.

3.1.3 Test, adjust and balance systems during summer season for air conditioning systems and during winter season for heating systems, including at least a period of operation at outside conditions within 5ºF wet bulb temperature of maximum summer design condition, and within 10ºF dry bulb temperature of minimum winter design condition. When seasonal operation does not permit measuring final temperatures, then take final temperature readings when seasonal operation does permit. The Contractor shall return for a change of seasons test at no additional cost to the Owner and submit the revised TAB report.

3.1.4 Punch List: Prepare a deficiency (punch)list for the Contractor with a copy of the Engineer that lists all items that are incorrectly installed or are functioning improperly. Provide a retest after all items are corrected.

3.1.5 Prepare TAB report of test results, including instrumentation calibration reports, in format recommended by applicable standards, modified as required to include all data listed herein.

3.1.6 Patch holes in insulation, ductwork and housings, which have been cut or drilled for test purposes, in manner recommended by original Installer.

3.1.7 Mark equipment settings, including damper control positions, valve indicators, fan speed control levers, and similar controls and devices, to show final settings at completion of TAB work. Provide markings with paint or other suitable permanent identification materials.

3.1.8 Include in the TAB report recommendations for correcting unsatisfactory mechanical performances when system cannot be successfully balanced.

3.1.9 Include an extended warranty of ninety (90) days after completion of test and balance work, during which time the Engineer, at his discretion, may request a recheck, or resetting of any component as listed in test report. The TAB company shall provide technicians and instruments and make any tests required by the Engineer during this time period.

3.2 Controls

3.2.1 Check all HVAC controls for proper location, calibration and sequence of operation.

3.2.2 Check operation of all controllers and controlled devices to verify proper action and

direction. Check the operation of all interlocks.

3.2.3 Check all motorized damper motors for leakage when in closed position. If leakage is more that 5%, mechanical contractor shall reset damper linkages.

3.2.4 Check all control valves for complete closure and correct action under all operating conditions.

3.3 Air Balancing

3.3.1 Leakage tests on ductwork must have been completed before air balancing.

3.3.2 Set dampers, volume controls and fan speeds to obtain specified air delivery with minimum noise level. Rebalance as required to accomplish this. Simulate fully loaded filters during test.

3.3.3 Set grille deflections as noted on plans. Modify deflections if required to eliminate drafts or objectionable air movement.

3.3.4 Record air terminal velocity after completion of balance work.

3.3.5 Record final grille and register deflection settings if different from that specified on contract drawings.

3.3.6 Record all fan speeds.

3.4 Data Collection:

3.4.1 In addition to the data required for any specified performance tests, measure and record the temperatures, pressures, flow rates, and nameplate data for all components listed herein.

3.4.2 It is the intent of this section to record data on balanced systems, under normal operating or design conditions.

3.4.3 Temperatures:

1. Outside dry and wet bulb temperatures.
2. Dry bulb temperature in each room and at least one wet bulb temperature in each zone.
3. Refrigerant liquid and suction temperatures.
4. Inlet and outlet temperature of each heat exchange device - both fluids.

3.4.4 Pressures:

1. Suction and discharge static pressure of each fan.
2. Suction and discharge pressure of each pump.
3. Each refrigerant suction and discharge pressure.

3.4.5 Flow rates:

1. Flow rate through each fan.

3. Flow rate through each coil or heat exchange device.

3.4.6 Nameplate Data:

1. Complete nameplate data for all equipment.

2. Motor data to include horsepower, phase, voltage, RPM, full load nameplate current, fuse rating in disconnect switch, number or manufacturer's size designation, and ampere rating of overcurrent and low voltage protection devices in starters.

END OF SECTION 23 05 93

THIS PAGE INTENTIONALLY LEFT BLANK

SECTION 23 07 13 - EXTERIOR INSULATION FOR DUCTWORK

1 GENERAL

1.1 Drawings and general provisions of Contract, including General and Supplementary Conditions and Division-1 Specification sections, apply to work of this section.

1.2 Division-23 Basic Mechanical Materials and Methods sections apply to work of this section.

1.3 Approval Submittals:

1.3.1 Product Data: Submit producer's data sheets and installation instructions on each insulation system including insulation, coverings, adhesives, sealers, protective finishes, and other material recommended by the manufacturer for applications indicated. Submit for:

Rigid duct insulation
Flexible duct insulation

1.4 O&M Data Submittals: Submit a copy of all approval submittals. Include in O&M Manual.

2 PRODUCTS

2.1 Acceptable Manufacturers: Subject to compliance with requirements, provide insulation products by Knauf, Owens-Corning, Johns Manville, Certainteed.

2.2 Flame/Smoke Ratings: Provide composite mechanical insulation (insulation, coverings, sealers, mastic, and adhesive) with a flame spread rating of 25 or less, and a smoke-developed rating of 50 or less as tested by ANSI/ASTM 84.

2.3 Rigid Fiberglass Insulation Board: ASTM C612, Class 1 (non load bearing). Boards shall be 3 pcf density with UL rated aluminum foil vapor barrier (FSK).

2.4 Flexible Fiberglass Insulation: ASTM C553, Type I, Class B-3 (temperature less than 350ºF). Duct wrap shall be 1 pcf density with UL rated aluminum foil vapor barrier (FSK).

2.5 General Purpose Mastic: Benjamin Foster 35-00 Series, Insulcoustic VIAC Mastic, Childers CP-10, or approved equal. The final selection of this product for the specific application indicated is the responsibility of the insulation supplier. The insulation system must meet the specified application.

2.6 Vapor Barrier Sealant: Benjamin Foster 30-35, Insulcoustic IC-501, 3M EC-1378, Childers CP-30, or approved equal. Provide "Low Odor" type. The final selection of this product for the specific application indicated is the responsibility of the insulation supplier. The insulation system must meet the specified application.

2.7 Adhesive: Benjamin Foster 85-20, Insulcoustic IC-205, 3M EC-35, Childers CP-82, Childers CP-89, or approved equal. The final selection of this product for the specific application indicated is the responsibility of the insulation supplier. The insulation system must meet the specified application.

2.8 Fiber-Glas Mesh: 10x10 Mesh. Foster Mastafab or equal.

3 EXECUTION

3.1 Insulate all supply, return and outdoor air ductwork exposed in mechanical rooms, mezzanines, fan lofts or in any finished spaces with 1½" thick rigid fiberglass insulation with vapor barrier.

3.2 Installation of Rigid Insulation:

3.2.1 Clean and dry ductwork prior to insulating. Butt insulation firmly together to ensure complete and tight fit over surfaces to be covered. Install insulation materials with smooth and even surfaces. Maintain integrity of aluminum vapor barrier wherever possible. Extend insulation without interruption through walls, floors and similar ductwork penetrations except where otherwise indicated.

3.2.2 Install with facing to the outside with a maximum of 25% compression. Butt all insulation joints firmly together. Longitudinal seam of the vapor retarder must be overlapped a minimum of 2". Staples shall be outward clinch and placed approximately 6" on center. All penetrations, joints, seams, and damage to the facing shall be sealed with glass fabric and mastic prior to system startup. For rectangular ducts over 24" wide, secure the insulation to the bottom of the duct with mechanical fasteners spaced on 12" centers to reduce sag. Do not overcompress the insulation with the retainer. Larger ducts shall be secured with fastners on 12-inch centers and 3 inches from all edges.

3.2.3 Apply open mesh glass fabric embedded in vapor barrier mastic. Then apply a second coat of general purpose mastic with aluminum grey color. This finish shall be complete over all rigid insulation.

3.3 Insulate all supply, return and outdoor air ductwork concealed above ceilings, in chases, or elsewhere, and the backs of all ceiling supply outlets with 2" thick fiberglass blanket insulation with vapor barrier.

3.4 Installation of Flexible Insulation:

3.4.1 Insulate round elbows and fittings with wrap such that thickness is equal to adjoining duct covering. Clean and dry ductwork prior to insulating.

3.4.2 Adhere insulation to duct with 50 percent coverage using approved insulation adhesive applied in 6-inch wide swaths with 6-inch spaces between swaths. Additionally secure insulation with perforated pins and Tuff-Bond or by self-sticking pins with a 3/8" self-tapping screw. Space on 12-inch centers and 3 inches from all edges. Ducts up through 24" wide only require one row of pins. Ducts over 24" wide shall have pins spaced as described herein.

3.4.3 Lap all joints 2 inches and seal joints with 4-inch wide strips of open mesh glass fabric embedded in two coats of general purpose mastic.

3.4.4 Seal all punctures and breaks in aluminum vapor barrier with open mesh glass fabric and vapor barrier sealant.

END OF SECTION 23 07 13

SECTION 23 07 16 - INSULATION FOR HVAC EQUIPMENT AND PIPING

1 GENERAL

1.1 Drawings and general provisions of Contract, including General and Supplementary Conditions and Division-1 Specification sections, apply to work of this section.

1.2 Division-23 Basic Mechanical Materials and Methods Sections apply to work of this section.

1.3 Approval Submittals:

1.3.1 Product Data: Submit producer's data sheets and installation instructions on each insulation system including insulation, coverings, adhesives, sealers, protective finishes, and other material recommended by the manufacturer for applications indicated. Submit for:

Flexible unicellular piping insulation

1.4 O&M Data Submittals: Submit a copy of all approval submittals. Include in O&M Manual.

2 PRODUCTS

2.1 Acceptable Manufacturers: Subject to compliance with requirements, provide insulation products by Armstrong, Johns Manville, Knauf, Owens Corning, Pittsburgh Corning, U.S. Rubber, or approved equal. All products shall be asbestos-free.

2.2 Flame/Smoke Ratings: Provide composite mechanical insulation (insulation, jackets, coverings, sealers, mastics, and adhesive) with a flame-spread rating of 25 or less, and a smoke-developed rating of 50 or less, as tested by ANSI/ASTM E84.

2.3 Pipe Insulation Materials:

2.3.1 Flexible Unicellular Pipe Insulation: ASTM C534, Type I. (Tubular, suitable for use to 200ºF.)

2.3.2 Staples, Bands, Wires, and Cement: As recommended by the insulation manufacturer for applications indicated.

2.3.3 Adhesives, Sealers, Protective Finishes: Products recommended by the insulation manufacturer for the application indicated.

3 EXECUTION

3.1 General:

3.1.1 Install thermal insulation products in accordance with manufacturer's written instructions, and in compliance with recognized industry practices to ensure that insulation serves intended purpose.

3.1.2 Install insulation materials with smooth and even surfaces and on clean and dry surfaces. Redo poorly fitted joints. Do not use mastic or joint sealer as filler for gapping joints and excessive voids resulting from poor workmanship.

3.1.3 Maintain integrity of vapor-barrier on insulation and protect it to prevent puncture and other damage. Label all insulation "ASBESTOS FREE".

3.1.4 Do not apply insulation to surfaces while they are hot or wet.

3.1.5 Do not install insulation until systems have been checked and found free of leaks. Surfaces shall be clean and dry before attempting to apply insulation. A professional insulator with adequate experience and ability shall install insulation.

3.1.6 Do not install insulation on pipe systems until acceptance tests have been completed except for flexible unicellular insulation. Do not install insulation until the building is "dried-in".

3.2 Flexible Unicellular Pipe Insulation:

3.2.1 Insulate the following piping systems:

3.2.1.1 Condensate drains from air conditioning units - ½" thick.

3.2.1.2 Refrigerant piping - ¾" thick.

3.2.2 Apply insulation in accordance with the manufacturer's recommendations and instructions. Mitre cut insulation to fit pipe fittings. Use approved cement to seal all joints and ends in the insulation.

3.2.3 Insulation outside the building shall be protected by a smooth 0.016" thickness aluminum jacket secured with aluminum bands on 12" centers.

END OF SECTION 23 07 16

SECTION 23 08 00 - HVAC SYSTEM COMMISSIONING

1 GENERAL

1.1 Intent: This section describes the work performed by the HVAC Commissioning Authority and the supporting work required by the Contractor. The Commissioning Authority will be provided by the Owner. selected by the owner and assigned to the Contractor. Drawings and general provisions of Contract, including General and Supplementary Conditions and Division 1 Specification sections, apply to work of this section.

1.2 Intent of Commissioning Process:

1.2.1 Verify operation and functional performance of HVAC systems for compliance with "Design Intent". "Design Intent" is used to indicate the detailed requirements for the HVAC system, comprised of:

1.2.1.1 Design criteria and assumptions

1.2.1.2 HVAC system description and contract documentation

1.2.1.3 Intended methods of system operation and maintenance

1.2.2 Document HVAC tests and inspections.

1.2.3 Verify application of operation and maintenance manuals, as-built (record) documents, spare parts listing, special tools listing, and other items as may be specified herein for support of HVAC systems and equipment.

1.2.4 Coordinate and direct training to personnel for operation and maintenance of HVAC equipment and systems.

1.3 Contractor Scope of Work: Contractor shall perform all testing and demonstrate system operation to support the Commissioning Authority. Furnish labor and materials to support complete HVAC commissioning as specified herein. Support interim commissioning of HVAC systems during initial season operation and follow-up commissioning of required HVAC systems during additional season operation.

1.4 Quality Assurance:

1.4.1 Reference: ASHRAE Guideline 1-1989, *Guideline for Commissioning of HVAC Systems*.

1.5 Documentation:

1.5.1 Provide the following to the Commissioning Authority:

1.5.1.1 Project plans and specification (contract documents), authorized revisions, approved HVAC shop drawings and submittals, Startup Reports, Test and Balance Reports, factory start-up and certification reports, etc.

1.5.1.2 Records of required code authority inspections, documentation sign-offs, etc.

1.6 Submittals:

1.6.1 HVAC Commissioning Authority will provide the following to the Contractor prior to starting the commissioning process.

1.6.1.1 Commissioning Plan consisting of specific equipment and system checklists.

1.6.1.2 Training Plan outlining required training and documentation.

1.6.2 Contractor shall submit the following prior to starting the commissioning process.

1.6.2.1 O & M Manuals.

1.6.2.2 Startup Reports per Division-23 section 23 05 90.

1.6.2.3 Test and Balance Report per Division-23 section 23 05 93.

1.6.2.4 List of tools and spare parts required by other Division-23 sections.

1.7 Responsibilities:

1.7.1 Contractor:

1.7.1.1 Contractor shall verify completeness of the building envelope, perimeter and interior items which effect proper operation and control of HVAC equipment and systems.

1.7.1.2 The Contractor shall assure participation and cooperation of trade subcontractors (electrical, Test and Balance, controls/energy management, IAQ, and HVAC) under his contract as required for the commissioning process.

1.7.1.3 The Contractor shall secure the services of a professional video service to record all training sessions provided by the subcontractors. All training sessions shall be professionally videotaped and two copies provided to the Owner.

1.7.2 Subcontractors:

1.7.2.1 The subcontractors shall be responsible for providing labor, material, equipment, etc., required within the scope of their specialty to facilitate the commissioning process. The subcontractors shall perform tests and verification procedures required by the commissioning process when requested by the Commissioning Authority and directed by the Contractor.

1.7.3 Owner:

1.7.3.1 Owner will schedule their personnel to participate in the HVAC Commissioning process. This may include building security personnel, HVAC operation personnel and maintenance personnel. Personnel operating and maintaining equipment and systems will attend training sessions., factory schools, and educational institutions where indicated.

1.7.3.2 Owner shall advise HVAC Commissioning Authority regarding changes in building occupancy and/or usage.

2 PRODUCTS

2.1 Instrumentation: Instrumentation shall be provided by agency performing prior tests. Instruments shall be operated by the individual agency requested by the HVAC Commissioning Authority, as specified elsewhere herein.

3 EXECUTION

3.1 General: The HVAC Commissioning Authority will actively participate in construction phase of the project to assure compliance with HVAC Commissioning requirements.

3.2 Procedure:

3.3 The Contractor and designated subcontractors shall attend a pre-commissioning meeting and establish requirements for HVAC Commissioning. The meeting shall outline:

3.3.1 Responsibility of each trade affected by HVAC Commissioning, as required by appropriate section of the specification and indicated on equipment and system checklists provided by the Commissioning Authority.

3.3.2 Requirements for documentation as listed elsewhere herein.

3.3.3 Requirements for documentation of HVAC test and inspections required by code authorities.

3.3.4 Requirements for the HVAC Commissioning program during specified operational seasons, part and full loads and as further delineated in Paragraph 3.4.

3.3.5 Format for training program for operation and maintenance personnel.

3.4 HVAC Commissioning:

3.4.1 To assist in the commissioning process, Operation and Maintenance manuals shall be completed and turned over to the Commissioning Authority as soon as possible during the course of the project, but in no case later than one month prior to the initial date scheduled for substantial completion.

3.4.2 The Commissioning Authority will develop and submit a specific start-up, check-out and sign-off form for every piece of major equipment and system, as well as other equipment hereinafter listed. These forms and lists do not necessarily indicate all the activities, tests and procedures which will be required for the commissioning and start-up of each piece of equipment and system.

3.4.3 The Contractor shall develop a work plan to demonstrate system and equipment operation. Systems shall be operated under actual or simulated full load conditions. Identify the operating conditions in the work plan. Where appropriate, systems shall be operated, tested, and started up, to assure operation for each of their seasonal or different characteristics, (for example heating and cooling).

3.4.4 After all components and every system has been completely commissioned, provide a 2-week, 24-hour per day fully functional automatic operation period of all systems simultaneously. This shall be successfully concluded before systems are accepted by the Owner.

3.4.5 Execute the final approved start-up and commissioning plan.

3.4.6 HVAC Commissioning shall begin only after HVAC equipment and systems, along with related equipment, systems, structures and areas are complete. Systems may be commissioned individually if requested by the Contractor and approved by the Commissioning Authority.

3.4.6.1 Verify Test and Balance readings, such as:

3.4.6.1.1 Supply and return air volumes

3.4.6.1.2 Fan performance

3.4.6.1.3 Branch duct readings

3.4.6.2 Verify calibration of thermostats and related controls, such as:

3.4.6.2.1 Fan coil units

3.4.6.2.2 Damper settings

3.4.6.3 Verify readings of remote data and control systems (Energy Management Control System), such as:

3.4.6.3.1 Temperatures

3.4.6.3.2 Air Flows

3.4.6.3.3 Damper positions

3.4.6.3.4 Differential pressures

3.4.6.4 Verify that the total HVAC system is performing to provide conditions as outlined in "Design Intent", for seasonal full load and part load conditions, as follows:

3.4.6.4.1 Temperature

3.4.6.4.2 Humidity

3.4.6.4.3 Air changes

3.4.6.4.4 Air movement

3.4.6.4.5 Air quality

3.4.6.4.6 Zone control

3.4.6.4.7 Energy Management

3.4.6.4.8 Pressurization

3.4.6.4.9 Control response

3.5 HVAC Start-Up Procedures:

3.5.1 Prior to start-up of any air handling equipment, the Commissioning Authority and the Contractor shall inspect the installation and verify that:

3.5.1.1 Ductwork is complete, clean and pressure-tested per specifications.

3.5.1.2 Prefilters and final filters are installed by the Contractor per design specifications; prefilters are to be replaced by the Contractor as required during this start-up period. The final filters shall be replaced by the Contractor any time that the static pressure drop across the filter exceeds 1.0". The filters installed shall meet design specifications and shall be dated with a felt-tip marker upon installation.

3.5.1.3 All electrical work is complete.

3.5.1.4 Safety devices are in place and operational.

3.5.1.5 Energy Management controls are installed and have been verified to be operational by the controls contractor.

3.5.1.6 All piping has been installed and insulated per specifications.

3.5.2 Prior to Occupancy:

3.5.2.1 No less than two weeks prior to substantial completion, the HVAC system for the space to be occupied shall be approved by the Commissioning Authority to be operational under the start-up procedures and shall be set up by the Contractor to operate continuously on a 24-hour basis. The following requirements shall be established by the Commissioning Authority and adhered by to the contractors during this period:

3.5.2.1.1 The Energy Management Control System is completely installed, and the EMCS Contractor has submitted a statement verifying that the system is complete and operational.

3.5.2.1.2 The HVAC air side and water systems shall be balanced at design levels by the Contractor, all systems and devices shall be operating according to specifications, and the Contractor's TAB report has been submitted to an approved by the HVAC system Design Engineer.

3.5.2.1.3 Outdoor air shall be set at maximum design levels and maintained at those levels continuously during the two-week ventilation period.

3.5.2.1.4 All exhaust systems are operational and functioning according to design CFM and specifications.

3.5.2.1.5 All electric heaters and hydronic reheat systems are installed and operational.

3.5.2.1.6 Prefilters shall continue to be replaced by the Contractor as required per the start-up schedule. The final filter shall be replaced by the Contractor at any time that the static pressure drop across the filter exceeds 1.0".

3.5.2.1.7 All interior spaces are secured with doors and windows normally closed.

3.5.2.1.8 Interior air quality shall be maintained at 75ºF and relative humidity less than 60%.

3.5.3 At Occupancy: Following the date of final completion and prior to occupancy, the Commissioning Authority shall verify all prefilters and final filters have been replaced with new, approved, specified filters.

3.6 Scheduling of Commissioning Activities

3.6.1 The contractor shall develop a schedule of commissioning related activities. The activities to include in the schedule and their relationship are listed below, in this specification section and in other specification sections.

3.6.2 The Commissioning Schedule shall include milestones and activities listed below:

- Notice to Proceed
- Commissioning Kickoff Meeting
- Equipment Startup
- Start of Functional Testing
- Training Planning Workshop
- Owner Training Session
- Substantial Completion Inspection

COMMISSIONING ACTIVITIES AND SCHEDULE RELATIONSHIP

Task	Specification Paragraph	Schedule Relationship
Contractor to provide current Contract Documents and changes to CxA	1.5.1.1	Upon contractor's **Notice-To-Proceed** and throughout the project if changed.
Commissioning Schedule		Seven days prior to **Commissioning Kickoff Meeting**.
Schedule Commissioning Kickoff Meeting		Schedule **Commissioning Kickoff Meeting** within 30 days after mobilization to the site.
Contractor to provide Approved HVAC shop drawings and submittals to CxA	1.5.1.1	Within 15 days of **Engineers' Approval**.
Contractor to provide O & M Manuals	1.6.2.1 & 3.4.1	No Later than one month prior to date of scheduled **Substantial Completion Inspection**.
Contractor to provide Startup Reports to CxA	1.5.1.1 & 1.6.2.2	Within one week of **Equipment Startup**.
Contractor to provide Test and Balance Report to CxA	1.5.1.1 & 1.6.2.3	Prior to **Start of Functional Testing**
Contractor & CxA Pre-Start-Up Inspection	3.5.1	No less than three days prior to any **Equipment Startup** activity.
Contractor to provide Certification Reports to CxA. Ductwork Pressure Test DDC Statement of Completeness Engineer's approval of T&B Report Verification of completeness	1.5.1.1 3.5.1.1 3.5.2.1.1 3.5.2.1.2 1.7.1.1 &	No later than seven days prior to **Start of Functional Testing**.

	3.4.6	
Contractor shall coordinate, schedule and train Owner's personnel in accordance with Training Plan provided by CxA.	1.7.1	Attend **Training Planning Workshop** 30 days prior to Substantial Completion Inspection. Conduct Training Session 10 days prior to Substantial Completion Inspection.
Contractor to provide Training and videographer	1,6.1.2	At **Training Session**
Contractor to provide a list of manufacturers recommended tools and spare parts.	1.6.2.4	Prior to **Training Planning Workshop**
Contractor to support Initial Season Commissioning Activities	1.3	Construction Commissioning activity
Contractor to support Additional Season Commissioning Activity	1.3	Post Construction Change of Season
Contractor to provide Records of Code Authority Inspections to CxA	1.5.1.2	Within Ten-days of **Code Inspection**.
Contractor to perform Equipment Prefunctional Checklist	3.4.2	Seven Days prior to **Equipment Startup**.
MC and Cntrls Contractor Demonstration	3.4.3	Upon receipt of **DDC Statement of Completeness** (both program and graphics)
Two-week Operational Test Period	3.4.4	Start two-week period upon successful **Functional Testing Demonstration**

END OF SECTION

THIS PAGE INTENTIONALLY LEFT BLANK

SECTION 23 09 23 - DIRECT DIGITAL CONTROLS

1 GENERAL

1.1 Drawings and general provisions of Contract, including General and Supplementary Conditions and Division-1 Specification sections, apply to work of this section.

1.2 Division-23 Basic Mechanical Materials and Methods sections apply to work of this section.

1.3 Extent of Energy Management Control And DDC Systems (EMCS/DDC) work required by this section is indicated on drawings and input/output schedules , and by requirements of this section. Control sequences are specified in Division-23 section "HVAC Sequence of Operation".

1.4 Refer to other Division-23 sections for installation of instrument wells, valve bodies and dampers in mechanical systems; not work of this section.

1.5 Refer to Division-26 sections for the following work; not work of this section. Power supply wiring for power source to power connection on controls and/or EMCS panels. Include starters, disconnects, and required electrical devices, except where specified as furnished, or factory-installed, by manufacturer.

1.6 Provide the following electrical work as work of this section, complying with requirements of Division-26 sections: Control wiring between field-installed controls, equipment, indicating devices, and EMCS/DDC panels.

1.7 Codes and Standards:

1.7.1 Electrical Standards: Provide electrical products which have been tested, listed and labeled by UL and comply with NEMA standards.

1.7.2 NEMA Compliance: Comply with NEMA standards pertaining to components and devices for electric control systems.

1.7.3 NFPA Compliance: Comply with NFPA 90A "Standard for the Installation of Air Conditioning and Ventilating Systems" where applicable to controls and control sequences.

1.7.4 Federal Communication Commission (FCC) as required.

1.8 Approval Submittals:

1.8.1 Product Data: Submit manufacturer's technical product data for each EMCS/DDC panel and control device furnished, indicating dimensions, capacities, performance characteristics, electrical characteristics, finishes of materials. Include installation instructions and start-up instructions. Provide technical specification data for each component and software module.

1.8.2 Shop Drawings: Submit shop drawings for the EMCS/DDC containing the following information:

1.8.2.1 Schematic flow diagram of system showing fans, pumps, coils, dampers, valves, and control devices.

1.8.2.2 Label each control device with setting or adjustable range of control.

1.8.2.3 Indicate all required electrical wiring. Clearly differentiate between portions of wiring that are factory-installed and portions to be field-installed. The point-to-point wiring diagram shall show all interconnections.

1.8.2.4 Provide details of faces of EMCS/DDC panels, including controls instruments and labeling.

1.8.2.5 Include written description of sequence of operation.

1.9 Test Reports and Verification Submittals:

1.9.1 Submit system verification letter from manufacturers representative stating that all HVAC controls have been checked, calibrated, started up and verified for proper operation. State that the Owner training has been completed and provide a roster of attendees.

1.10 O&M Data Submittals:

1.10.1 Maintenance Data: Submit maintenance instructions and spare parts lists for each type of control device. Include that type data, and a copy of all approval submittals in O&M Manual.

1.10.2 System Manual: In addition to the maintenance data requirements, provide an EMCS/DDC Owner's Manual in a separate binder specifically for this project. This manual shall provide a description of the information flow to and from panels and devices and shall describe the overall communications network. The manual shall also include operating instructions, block diagrams, schematics, schedules, and system descriptions. Instruct Owner's personnel with this manual during the required training periods.

1.10.3 Software: Submit a copy of all software.

1.10.4 Service: Submit name, address, and telephone number of company that will provide service and training for the system.

2 PRODUCTS

2.1 Acceptable Manufacturers: Subject to compliance with requirements, provide EMCS/DDC control systems of one of the following:

Alerton
Siebe
Honeywell, Inc.
Johnson Controls, Inc.
Siemens

2.2 General: Provide EMCS/DDC control products in sizes and capacities indicated, consisting of valves, dampers, sensors, controllers and other components as required for complete installation. Except as otherwise indicated, provide manufacturer's standard control system components as indicated by published product information, designed and constructed as recommended by manufacturer. Provide an EMCS/DDC controls system with the following

functional and construction features as indicated.

2.3 Quality Assurance:

2.3.1 Provide equipment of firms regularly engaged in manufacture of EMCS/DDC equipment, of types required, whose products have been in satisfactory use in similar service for not less than three years. Provide evidence that software has been in use satisfactorily for at least one year.

2.3.2 Contractor shall have at least three years experience in the installation and servicing of EMCS/DDC equipment similar to that being installed. Contractor shall have an office within 100 miles of the project and shall maintain a remote terminal capable of communication with the EMCS/DDC during the year warranty period.

2.4 Control Valves: Provide factory-fabricated electric control valves of type, body material and pressure class indicated. Where type or body material is not indicated, provided selection as determined by manufacturer for installation requirements and pressure class, based on maximum pressure and temperature rating of piping system. Provide valve size in accordance with scheduled or specified maximum pressure drop across control valve. Except as otherwise indicated, provide valves which mate and match material of connecting piping. Equip control valves with control valve motors with proper shutoff ratings for each individual application.

2.4.1 Water Service Valves: Equal percentage characteristics with rangeability of 50 to 1, and maximum full flow pressure drop of 10 feet head unless otherwise indicated. Two-way valves shall be suitable for dead-end service.

2.4.2 Steam Service Valves: Linear characteristics with rangeability 30 to 1, and maximum full flow pressure drop of 80% of inlet pressure for low pressure systems, and 42% for high pressure systems.

2.4.3 Single-Seated Valves: Cage type trim, providing seating and guiding surfaces for plug on “top and bottom” guided plugs.

2.4.4 Double-Seated Vales: Balanced plug-type, with cage type trim providing seating and guiding surfaces for plugs on “top and bottom” guided plugs.

2.4.5 Valve Trim and Stems: Polished stainless steel.

2.4.6 Packing: Spring-loaded Teflon, self-adjusting.

2.4.7 Terminal Unit Control Devices: Provide compact electric control valves for control of terminal units including, but not necessarily limited to convectors, unit heaters, finned tube radiation, reheat coils, and fan coil units that are of integral motor type. Provide 2-position modulating type valves. Valve actuators shall be 24 volts 120 volts.

2.5 Dampers: Refer to Division-23 Section “Ductwork Accessories” for dampers. Actuators are work of this section.

2.6 Actuator Motors: Size each motor to operate dampers or valves with sufficient reserve power to provide smooth modulating action or two position action as specified.

2.6.1 Provide permanent split-capacitor or shaded pole type motors with gear trains completely oil-immersed and sealed. Equip spring-return motors, where indicated on drawings or in operational sequence, with integral spiral-spring mechanism. Furnish entire mechanism in housing designed for easy removal for service or adjustment of limit switches, auxiliary switches, or feedback potentiometer.

2.6.2 Equip motors for outdoor locations and for outside air intakes with "O-ring" gaskets designed to make motors completely weatherproof, and equip with internal heaters to permit normal operation at 10□F.

2.6.3 Furnish non-spring return motors for dampers larger than 25 sq. ft. and for valves larger than 2½". Size for running torque rating of 150 inch-pounds and breakaway torque rating of 300 inch-pounds. Size spring-return motors for running torque rating of 150 inch-pounds and breakaway torque rating of 150 inch-pounds.

2.7 EMCS/DDC Associated Components:

2.7.1 Provide field-programmable microprocessor-based, stand-alone EMCS/DDC panels as specified herein. The EMCS/DDC panel manufacturer shall be responsible for the complete engineering of the panel. The panel shall be UL listed and housed in a key locked metal cabinet . Parts shall be plug in (modular) for easy repair or expansion. Power input shall be 24V or 120 V. Relays and contacts shall be rated at 24 VA at 24 VAC or 125 VA at 120 and 230 VAC, as required.

2.7.2 The panels shall have the capability to be upgraded through modules.

2.7.3 Programming shall utilize low level English language.

2.7.4 Coordinate with the EMCS/DDC manufacturer and ensure that all wire and conduit (type and size) is suitable for the equipment being installed.

2.7.5 Each EMCS/DDC panel shall have at least the minimum number of output and input channels for controlling loads as shown on the drawings.

2.7.6 Panels shall have a keyboard with an access code to prevent unauthorized entry. The keyboard shall be used to display setpoints and valves, and for override and programming.

2.7.7 L.E.D. visual display shall provide prompted programming and shall indicate all system parameters including current time, day and month and error messages.

2.7.8 Provide for 48 hours minimum of battery backup for field programs in RAM. All logic, utility, calculations, and control functions shall be in ROM.

2.7.9 The control console shall have the capability to communicate with other system components by using a two-wire communication line.

2.7.10 The system shall be driven by a line power synchronized program clock. Clock display shall include year, month, day of month and time in hours, minutes and seconds. The clock shall also automatically update for days in month, daylight savings time, and leap year.

2.7.11 Programming shall be self-prompting such that the operator is guided to the next entry item. Field programming shall be readily accomplished by the user.

2.7.12 Diagnostics and Serviceability: Provide built-in, self-testing for lights, digital display, and memory. Provide all electronics in modular form of the plug-in type.

2.8 EMCS/DDC Functions:

2.8.1 Control Functions: Provide for closed-loop control by proportional, proportional-integral (PI), proportional-integral derivative (PID), incremental, and/or floating modes. Control accuracy: plus or minus 0.5° F of set point for all steady state load conditions. Provide specific control functions described in Division-23 section “HVAC Sequence of Operation”.

2.8.2 Management Functions: Provide capability for trending of variables, totalizing, and historical data storage. Provide for monitoring of selected parameters locally and remotely.

2.8.3 Time of Day Program: Provide the ability to turn loads on and off per the input/output schedule and have a time initiate resolution of one minute. The system shall be designed such that equipment can have a different schedule each day of the week and multiple on-off schedules per day. The system shall include a holiday feature which shall include its own time schedules and holiday duration. It shall be possible to program holidays up to one year in advance. The program shall automatically changeover from Daylight Savings to Standard Time.

2.8.4 Duty Cycle Program: Provide ability to shed and restore loads and to automatically vary the off time of cycled equipment based on outdoor temperature. Use only for electric heaters. During the heating and cooling seasons the milder the temperature, the longer the off position of the cycle interval of the equipment being controlled. It shall be possible to modify the interval for each controlled load. The system shall use solid state temperature sensors which supply data to the system in order to determine off duration and the number of loads to be shed.

2.8.5 Demand Control: Provide kW demand limiting with adjustable load shedding (setpoint and schedule).

2.8.6 Optimized Start/Stop Program: The EMCS shall have the ability to vary the start time of heating system equipment based on outdoor air temperature. It shall be possible to modify the base start time, as well as the start time as a function of outdoor air temperature. The system shall utilize a solid state temperature sensor to determine startup time.

2.8.7 Chiller Optimization Program: The EMCS shall provide for optimization of chilled water supply temperature based on outdoor air temperature or chilled water return temperature as indicated. The system shall utilize solid state temperature sensors to determine optimized chilled water supply temperature.

2.8.8 Timed Override: Remote override timers (where indicated on the drawings and input/output schedule) shall enable after hour or off-schedule use of the controlled equipment.

2.8.9 Automatic Restart Programming: Provide for sequential automatic restart of all equipment in the normal mode following a power outage.

2.8.10 Temperature Indication: The EMCS shall monitor remote temperatures where indicated on the drawings and input/output schedule.

2.8.11 Energy Consumption: The EMCS shall have the ability to record 15 minute average analog readings for the past 48 hours and to monitor and record electric consumption for the past month.

2.8.12 Alarms: Provide alarms for control points out of range (adjustable) and provide alarm summary capability.

2.9 EMCS/DDC Associated Components:

2.9.1 Communication Module: The EMCS/DDC shall be supplied with all necessary communication modules and modems as required for a remote data terminal to program and recall data. The communication modules shall utilize voice grade telephone lines for this transmission and modems as required for a remote data terminal to program and recall data. The communication modules shall be connect to the telephone lines through a data access arrangement which protects the EMCS/DDC and telephone equipment from electrical surges. Provide all necessary equipment to allow remote programming and monitoring of input channels and on/off status from an IBM PC XT .

2.9.2 Remote Data Terminal: Where indicated, provide a complete microcomputer IBM PC XT or equal with disk drive, terminal, modem, monitor and printer. Provide software to program and recall data from all emote locations. The system shall be installed such that the operator can dial each EMCS panel via voice grade telephone circuits. It shall be possible to perform the following from the remote terminals.

2.9.2.1 Program the entire EMCS/DDC system.

2.9.2.2 Read system temperatures, determine system set points, determine load on-off status, and determine program function causing load status.

2.9.2.3 Perform energy audits, data gathering, and logging.

2.9.2.4 Troubleshoot the EMCS/DDC via diagnostic programs. The diagnostic messages displayed on the EMCS/DDC readout shall also be printed at the terminal when the system si interrogated.

2.9.3 Hardware: Provide key-locked NEMA-1 metal cabinet, modular components for expandability and maintenance, keyboard entry, battery backup to prevent loss of memory for at least 48 hours, local manual override, AC line voltage surge protection.

2.9.4 Channel Bypass and Override: Provide bypass switches for each output channel such that the controlled device can operate normally as if the EMCS/DDC was not installed. Provide remote override timers where shown in the input/output schedule on the drawings.

2.9.5 Associated Hardware: Provide actuators, relays, and other interface devices as required to execute the indicated control functions. Coordinate with Division-23 section "HVAC Control Sequences" and the input/output schedule on the drawings.

2.10 EMCS/DDC Input Devices:

2.10.1 Temperature Sensors: Provide nickel resistance temperature detector (RTD) type sensors for duct, well or room mounting as required by duty indicated. Accuracy: plus or minus 0.5□F.

2.10.2 Temperature Transmitters: Provide 3 or 4 wire resistance temperature detector (RTD) type transmitters for duct, well or room mounting as required by duty indicated. Provide metal enclosure sealed against moisture. Accuracy: plus or minus 0.25□F. Install wells to accommodate sensors. Wells must be of sufficient size to allow insertion of an electronic probe with the sensor for calibration. Accutech AI-1000 or approved equal.

2.10.3 Current Transformers: Provide current transformers (and potential transformers if required) and all associated interface equipment for sensing kW demand.

2.10.4 Hydronic Differential Pressure Transmitter: Provide self-contained, variable capacitance type differential pressure transmitters with the following features. Subject to compliance with requirements, provide transmitters of one of the following: Rosemont, Foxboro, Leslie, Yokagawa.

2.10.4.1 Sealed electronics compartment, suitable for duty at 90□F, 100% RH. Provide NEMA 4 enclosure.

2.10.4.2 Output 4-20 ma DC, isolated linear signal.

2.10.4.3 Design pressure: 2000 psi, design overrange differential: 2000 psi with minimal adverse affect on output.

2.10.4.4 Accuracy: plus or minus 0.25% of span.

2.10.4.5 Stability: plus or minus 0.25% of range limit.

2.10.4.6 Provide zero and span adjustments. Set span for each transmitter based on duty, not at maximum unless required.

2.10.4.7 Provide three-valve bypass manifold.

2.10.5 Magnetic Flow Meters: Flow meters shall be insertion type and shall operate on the electromagnetic induction principle. Unit shall provide an output signal directly proportional to the liquid rate of flow. Meters shall be selected for a maximum velocity of 15 feet per second at design flow rate. The magnetic flow meter shall include a flanged-style flow head with an integral or remote mounted signal converter as required for the project conditions. Johnson - Yokogawa or approved equal.

2.10.5.1 The magnetic flow meters shall be wet calibrated at the manufacturer's facility. A calibration certificate shall be provided for each meter and be traceable to the U.S. National Bureau of Standards. The accuracy of each meter, including the flow head and converter, shall be at least + or - 0.8% of measured value for velocities above 0.8 feet/second.

2.10.5.2 The flow head shall have a 304 stainless steel metering tube and liner suitable for the service to be encountered. End connections shall be steel flanged, ANSI Class 150. The flow head shall be epoxy coated steel and welded at all joints. The meter shall be suitably crated, including end covers to protect it during shipment and storage. The flow head shall have flat, elliptically-shaped, self-cleaning electrodes of 316 stainless steel. The field coils in the flow head shall be supplied with a precisely adjusted direct current which is periodically reversed from +125 mA to -125 mA. When installed in lined or non-metallic piping, the primary flow head shall be provided with 316 stainless steel grounding rings.

2.10.5.3 The converter shall be microprocessor based and fully field configurable for the measuring range, local indication and totalizing, pulse output, analog output, bi-directional flow, and low-flow cutoff. The converter shall have a NEMA 4, die-cast aluminum polyurethane-coated housing. The converter shall be capable of providing both analog and pulse outputs at the same time. The analog output shall be galvanically isolated, 4-20 or 0-20 mA, programmable, and capable of a 700-ohm load. The pulse output shall be galvanically isolated, 24 volt, and programmable from 50 to 360,000 pulses/hour. The converter shall have adjustable damping to provide response time from 0.2 to 1,000 seconds. The converter shall have a programmable 7-digit LCD display for flow rate in US GPM and for flow totalization. The converter shall be capable of monitoring the flow in both directions, providing pulse or analog signal output for both flow directions, totalizing in both directions, and summing the difference of the bi-directional flow. The converter shall be powered by a 115 VAC, 60 Hz, 6-watt source.

The magnetic flow meter shall be capable of operating in ambient temperatures from -15□ to 140□F. The unit shall operate at 200 psig safe working pressure at, 100□F.

2.10.6 Differential and Static Pressure Sensors (Air): Provide 0-6" w.g. adjustable in 2" w.g. span pressure sensors with □0.5% full scale accuracy. Provide zero and span adjustments. Provide over-pressure protection to 10 psig positive or negative.

2.10.7 Differential Pressure Switches (Air): Provide 0.05 to 5" w.g. differential pressure switches with adjustable setpoint and SPDT contact rated for duty indicated. Provide over-pressure protection to 1 psig positive or negative.

2.10.8 Humidity Sensors:

2.11 Guarantee:

2.11.1 All components, parts, and assemblies shall be guaranteed against defects in material and workmanship for a period of one year after acceptance. Expressed warranties are conditionally based on the requirement that the items covered within the guarantee are used and maintained in accordance with the manufacturer's recommendations. Guarantee commences at time of acceptance and continues for one year. Acceptance shall not occur until the Owner's operators are able to use the EMCS/DDC and receive reliable information from inputs and outputs.

2.11.2 The first year guarantee shall, as part of the base bid for the EMCS/DDC, include full service and maintenance of the EMCS/DDC. This service and maintenance shall include all necessary repair, reprogramming, calibration, cleaning, minimum (4) quarterly inspections, call back service, etc. This first year service, maintenance and guarantee shall be included in the base bid of the EMCS/DDC.

3 EXECUTION

3.1 Examine areas and conditions under which EMCS/DDC work is to be installed. Do not proceed with work until unsatisfactory conditions have been corrected in manner acceptable to installer.

3.2 Installation of EMCS/DDC:

3.2.1 General: Install systems and materials in accordance with manufacturer's instructions, shop drawings, and details on drawings. Install electrical components and use electrical products complying with requirements of applicable Division-26 sections of these specifications. Mount panels at convenient locations and heights.

3.2.2 Control Wiring: The term "control wiring" is defined to include wire, conduit and miscellaneous materials as required for mounting and connecting electric control devices. Install all control wiring in conduit. All low voltage control wiring, except wiring located above accessible ceilings, shall be installed in conduit. Low voltage control wiring above accessible ceilings may be installed without conduit, provided it is run at right angles to the building structure and is tie-wrapped and supported per Division-26 and code requirements.

3.2.3 Wiring System: Install complete control wiring system for the EMCS/DDC. Conceal wiring, except in mechanical rooms and areas where other conduit and piping are exposed. Provide multi-conductor instrument harness (bundle) in place of single conductors where number of conductors can be run along common path. Fasten flexible conductors bridging cabinets and doors, neatly along hinge side, and protect against abrasion. Tie and support conductors neatly.

3.2.4 Install control wiring in accordance with the National Electric Code and Division 26 requirements.

3.2.5 Number-code or color-code conductors, excluding those used for local individual room controls, appropriately for future identification and servicing of control system. Tag all sensor wiring to identify zone number and room number where sensor is located.

3.2.6 Label all sensors, valves, dampers, safety devices and controllers with engraved tags matching the shop drawings.

3.3 Programming of EMCS/DDC:

3.3.1 The Contractor shall obtain operational schedules for the controlled equipment from the Engineer. Submittal data relevant to operational schedules shall be forwarded from the Contractor to the Engineer. Upon receipt of approval, the Contractor shall proceed with installation, setup, calibration and check out of the various control and monitoring systems.

Having completed component and system installation, the Contractor shall submit a written request to the Engineer to inspect and approve their satisfactory operation.

3.3.2 The EMCS/DDC shall perform all functions on the equipment as describes in Division-23 section “HVAC Sequence of Operation and as called for in the input/output schedule on the drawings. This, in conjunction with the drawings, defines the scope and extent of the project with regard to the required number of panels, control point relays, and devices. Field verify voltages at point-of-interface and provide relays as required.

3.3.3 Channel numbers may be reassigned by the Contractor during shop drawing submittal.

3.3.4 Model numbers, horsepowers, voltages, and other information equipment where listed on the drawings are for Contractor's convenience. Verify all information in the field as necessary for preparation of shop drawings.

3.4 Functional Requirements of EMCS/DDC:

3.4.1 Provide all necessary relays, sensors, wiring and contacts to achieve proper operation.

3.4.2 Connect EMCS/DDC panels to remote panels where shown.

3.4.3 Coordinate EMCS/DDC work with pneumatic control work. Provide compatible equipment.

3.5 Adjusting and Cleaning:

3.5.1 Startup: Startup, test, and adjust the EMCS/DDC in presence of manufacturer's authorized representative. Demonstrate compliance with requirements. Replace damaged or malfunctioning controls and equipment.

3.5.2 Cleaning: Clean factory-finished surfaces. Repair any marred or scratched surfaces with manufacturer's touch-up paint.

3.5.3 Final Adjustment: After completion of installation, adjust the program, relays, interface devices, and similar equipment provided as work of this section for optimum operation.

3.6 VFD System Adjustment: The drive/controller supplier shall set all adjustments and setpoints for initial operation. The hydronic system and all pumps and control valves shall be monitored for proper operation. The ductwork and all fans and terminal units shall be monitored for proper operation . It shall be recognized that final settings will be obtained by trial-and-error by necessity. Call backs to achieve proper settings shall be included in the base bid.

3.7 Owner's Instructions:

3.7.1 During system startup and at such time acceptable performance of the EMCS/DDC hardware and software has been established, the Contractor shall provide on-site operator instruction. This instruction shall be performed during normal working hours and shall be conducted by a competent representative of the Contractor familiar with the system's software, hardware and accessories. The Contractor shall maintain a roster of all attendees at all training sessions.

3.7.2 At a time mutually agreed upon during system training as stated above, the Contractor shall give up to 40 hours (as needed) of instruction to the Owner's designated personnel on the operation of all equipment within the EMCS/DDC and describe its intended use with respect to the programmed functions specified.

3.7.3 Operator orientation of the EMCS/DDC shall include, but not be limited to, the overall operational program, equipment functions both individually and as part of the total integrated system, commands, advisories, and appropriate operator intervention required in responding to the EMCS/DDC operation.

3.7.4 Provide at least 14-day notice to Owner and Engineer of training dates.

3.8 System Verification: The manufacturer's authorized representative shall state in writing to the Engineer that the EMCS/DDC system is operating properly, final adjustments and calibrations are complete, and Owner training has been accomplished.

END OF SECTION 23 09 23

SECTION 23 31 13 - HVAC METAL DUCTWORK

1 GENERAL

1.1 Drawings and general provisions of Contract, including General and Supplementary Conditions and Division-1 Specification sections, apply to work of this section.

1.2 Division-23 Basic Mechanical Materials and Methods Sections apply to work of this section.

1.3 Extent of HVAC metal ductwork is indicated on drawings and in schedules, and by requirements of this section.

1.4 Refer to other Division-23 sections for exterior insulation of metal ductwork.

1.5 Refer to other Division-23 sections for ductwork accessories.

1.6 Codes and Standards:

1.6.1 SMACNA Standards: Comply with SMACNA's "HVAC Duct Construction Standards, Metal and Flexible" 1985 Edition for fabrication and installation of metal ductwork, unless otherwise noted.

1.6.2 NFPA 90A Compliance: Comply with NFPA 90A "Standard for the Installation of Air Conditioning and Ventilating Systems".

1.7 Approval Submittals:

1.7.1 Product Data: Submit manufacturer's technical product data and installation instructions for the following.

Factory-fabricated ductwork
Sealants
Duct liner
Adhesive
Flexible duct
Spin-in fittings
Side take-off fittings

1.7.2 Shop Drawings: Submit scaled layout drawings of HVAC metal ductwork and fittings including, but not limited to, duct sizes, locations, elevations, and slopes of horizontal runs, wall and floor penetrations, and connections. Show interface and spatial relationship between ductwork and proximate equipment. Show modifications of indicated requirements, made to conform to local shop practice, and how those modifications ensure that free area, materials, and rigidity are not reduced.

2 PRODUCTS

2.1 Ductwork Materials:

2.1.1 Exposed Ductwork Materials: Where ductwork is indicated to be exposed to view in occupied spaces, provide materials which are free from visual imperfections including pitting, seam marks, roller marks, stains and discolorations, and other imperfections, including those which would impair painting.

2.1.2 Galvanized Sheet Metal: Except as otherwise indicated, fabricate ductwork from galvanized sheet steel complying with ASTM A 527, lockforming quality; with G 90 zinc coating in accordance with ASTM A 525; and mill phosphatized for exposed locations. Stamp gauge and manufacturer's identification on each sheet. Break sheets so that identification is exposed.

2.2 Miscellaneous Ductwork Materials:

2.2.1 General: Provide miscellaneous materials and products of types and sizes indicated and, where not otherwise indicated, provide type and size required to comply with ductwork system requirements including proper connection of ductwork and equipment.

2.2.2 Duct Liner: Fibrous glass, 1½ pcf minimum density, complying with Thermal Insulation Manufacturers Association (TIMA) AHC-101; of thickness indicated. Certainteed "Coated Ultralite", Owens Corning "Aeroflex", PPG "Textrafine", or Manville "Linacoustic".

2.2.3 Duct Liner Adhesive: Comply with ASTM C 916 "Specifications for Adhesives for Duct Thermal Insulation".

2.2.4 Duct Liner Fasteners: Comply with SMACNA HVAC Duct Construction Standards, Article S2.11.

2.2.5 Duct Sealant: Provide non-hardening, non-migrating mastic or liquid elastic sealant, type applicable for fabrication/installation detail, as compounded and recommended by manufacturer specifically for sealing joints and seams in ductwork.

2.2.6 Ductwork Support Materials: Except as otherwise indicated, provide hot-dipped galvanized steel fasteners, anchors, rods, straps, trim and angles for support of ductwork. For exposed stainless steel ductwork, provide matching stainless steel support materials. For aluminum ductwork, provide matching supports unless materials are electrolytically separated from ductwork.

2.2.7 Flexible Ducts: Provide flexible ductwork with an R-value of R-6unless the ductwork is in a ceiling return plenum. The use of flexible ductwork for connection of supply air return air devices is acceptable only where shown on the drawings.

2.2.7.1 Construction: Provide reinforced metalized polyester jacket that is tear and puncture resistant, air tight inner core with no fiberglass erosion in the air stream and an encapsulated wire helix. Flexible ductwork shall have a recommended operating pressure of 6" w.g. for sizes 4" through 12" diameter and 4" w.g. for sizes 14" through 20" diameter.

All diameters shall be suitable for a negative operating pressure of 0.75" w.g. Flexible ductwork shall meet the requirements of UL-181, the Florida Energy Code, SBCC, NFPA 90A and NFPA 90B.

2.2.7.2 Acceptable Manufacturers: Subject to compliance with requirements, provide R-6 flexible ductwork by: Atco 36, Flexmaster 8M-R6 or Thermaflex M-KE R6.

2.2.8 Spin-in and Side Take-off Fittings: Provide round branch run-outs as follows.

2.2.8.1 Supply air diffuser connections shall be conical with damper and one inch high insulation stand-off equal to Crown 3200 DS or Flexmaster CBDE-BO.

2.2.8.2 Where duct height does not permit the use of conical spin-in fittings, use low profile side take-off fittings equal to Crown 3300-DS or Flexmaster STOD-BO.

2.2.9 Fittings: Provide radius type fittings fabricated of multiple sections with maximum 15° change of direction per section. Unless specifically detailed otherwise, use 45° laterals and 45° elbows for branch takeoff connections. Where 90° branches are indicated, provide conical type tees.

2.3 Fabrication:

2.3.1 Shop fabricate ductwork in 4, 8, 10 or 12-ft lengths, unless otherwise indicated or required to complete runs. Preassemble work in shop to greatest extent possible, so as to minimize field assembly of systems. Disassemble systems only to extent necessary for shipping and handling. Match-mark sections for reassembly and coordinated installation.

2.3.2 Shop fabricate ductwork of gauges and reinforcement complying with SMACNA "HVAC Duct Construction Standards", except provide sealant at all joints. supply duct from air conditioning units and all return and exhaust duct shall be minimum 2" pressure class unless otherwise noted.

2.3.3 Fabricate duct fittings to match adjoining ducts, and to comply with duct requirements as applicable to fittings. Except as otherwise indicated, fabricate elbows with center-line radius equal to 1½ times associated duct width; and fabricate to include turning vanes in elbows where shorter radius is necessary. Limit angular tapers to 30° for contracting tapers and 20° for expanding tapers.

2.3.4 Fabricate ductwork with accessories installed during fabrication to the greatest extent possible. Refer to Division-23 section "Ductwork Accessories" for accessory requirements.

2.3.5 Fabricate ductwork with duct liner in each section of duct where indicated. Laminate liner to internal surfaces of duct (100% coverage) in accordance with instructions by manufacturers of lining and adhesive, and fasten with mechanical fasteners (Grip Nails or Stic Klips) on 16 centers. On horizontal runs install top and bottom first and wedge sides between top and bottom. Apply a brush coat of fire retardant over all joints, visible cut edges, and leading edges to prevent erosion.

2.4 Factory-Fabricated Low Pressure Ductwork (Maximum 2" W.G.):

2.4.1 Material: Galvanized sheet steel complying with ASTM A 527, lockforming quality, with ASTM A 525, G90 zinc coating, mill phosphatized.

2.4.2 Gauge: 28-gauge minimum for round ducts and fittings, 4" through 8" diameter. 26-gauge minimum 9" through 14", 24-gauge minimum 15" through 26".

2.4.3 Elbows: One piece construction for 90° and 45° elbows 14" and smaller. Provide multiple gore construction for larger diameters with standing seam circumferential joint.

2.4.4 Divided Flow Fittings: 90° tees, constructed with saddle tap spot welded and bonded to duct fitting body.

2.4.5 Acceptable Manufacturers: Subject to compliance with requirements, provide factory-fabricated ductwork by Semco Mfg., Inc. or United Sheet Metal Div., United McGill Corp, or approved equal.

2.5 Factory-Fabricated High Pressure Ductwork (3" W.G. and Higher):

2.5.1 Round Ductwork: Construct of galvanized sheet steel complying with ASTM A 527 by the following methods and in minimum gauges listed.

Diameter	Minimum Gauge	Method of Manufacture
3" to 14"	26	Spiral Lockseam
15" to 26"	24	Spiral Lockseam
27" to 36"	22	Spiral Lockseam
37" to 50"	20	Spiral Lockseam
51" to 60"	18	Spiral Lockseam
Over 60"	16	Longitudinal Seam

Provide locked seams for spiral duct; fusion-welded butt seam for longitudinal seam duct.

Fittings and Couplings: Construct of minimum gauges listed. Provide continuous welds along seams.

Diameter	Minimum Gauge
3" to 36"	20
38" to 50"	18
Over 50"	16

2.5.2 Flat-Oval Ductwork: Construct of galvanized sheet steel complying with ASTM A 527, of spiral lockseam construction, in minimum gauges listed.

Maximum Width	Minimum Gauge

Under 25"	24
25" to 48"	22
49" to 70"	20
Over 70"	18

Fittings and Couplings: Construct of minimum gauges listed. Provide continuous weld along seams.

Maximum Width	Minimum Gauge
Under 37"	20
37" to 50"	18
Over 50"	16

2.5.3 Internally Insulated Duct and Fittings: Construct with outer pressure shell, 1" thick insulation layer, and perforated inner liner. Construct shell and liner of galvanized sheet steel complying with ASTM A 527, of spiral lockseam construction, use longitudinal seam for over 59", in minimum gauges listed.

Nominal Duct Diameter	Outer Shell	Inner Liner
3" to 12"	26 ga.	24 ga.
13" to 24"	24 ga.	24 ga.
25" to 34"	22 ga.	24 ga.
35" to 48"	20 ga.	24 ga.
49" to 58"	18 ga.	24 ga.
Over 59"	16 ga.	20 ga.

Fittings and Couplings: Construct of minimum gauges listed. Provide continuous weld along seams of outer shell.

Nominal Duct Diameter	Outer Shell	Inner Liner
3" to 34"	20 ga.	20 ga.
36" to 48"	18 ga.	20 ga.
Over 48"	16 ga.	20 ga.

Inner Liner for Straight Duct: Perforate with 3/32" holes for 22% open area. Provide metal spacers welded in position to maintain spacing and concentricity. Provide a plastic film between the perforated liner and insulation to act as a vapor barrier.

Inner Liner for Fittings: Solid sheet metal. Provide metal spacers welded in position to maintain spacing and concentricity.

Mylar Film: Provide interior mylar film on interior liner.

2.5.4 Optional Ducts and Fittings: At Installer's option, provided that certified tests by Manufacturer show that rigidity and performance is equivalent to SMACNA standard gauge

ductwork, provide ducts and fittings as follows:

Ducts: Construct of Manufacturer's standard gauge, with spiral lock seam and intermediate standing rib.

Fittings: Construct by fabricating with spot welding and bonding with neoprene-base cement in lieu of continuous weld seams.

2.5.5 Acceptable Manufacturers: Subject to compliance with requirements, provide factory-fabricated ductwork Semco Mfg., Inc. or United Sheet Metal Div., United McGill Corp., or approved equal.

3 EXECUTION

3.1 General: Examine areas and conditions under which HVAC metal ductwork is to be installed. Do not proceed with work until unsatisfactory conditions have been corrected in manner acceptable to Installer.

3.2 Installation Of Metal Ductwork:

3.2.1 General: Assemble and install ductwork in accordance with recognized industry practices which will achieve air-tight (5% leakage for systems rated 3" and under; 1% for systems rated over 3") and noiseless (no objectionable noise) systems, capable of performing each indicated service. Install each run with minimum number of joints. Align ductwork accurately at connections, within 1/8" misalignment tolerance and with internal surfaces smooth. Support ducts rigidly with suitable ties, braces, hangers and anchors of type which will hold ducts true-to-shape and to prevent buckling. Support vertical ducts at every floor.

3.2.2 Supports: Install concrete inserts for support of ductwork in coordination with formwork, as required to avoid delays in work. Install self-drilling screw anchors in prestressed concrete or existing work.

3.2.3 Field Fabrication: Complete fabrication of work at project as necessary to match shop-fabricated work and accommodate installation requirements. Seal joints in round or oval ductwork with hard cast or shrink bands, and sheet metal screws, or by welding.

3.2.4 Routing: Locate ductwork runs, except as otherwise indicated, vertically and horizontally. Avoid diagonal runs wherever possible. Locate runs as indicated by diagrams, details and notations or, if not otherwise indicated, run ductwork in shortest route which does not obstruct useable space or block access for servicing building and its equipment. Hold ducts close to walls, overhead construction, columns, and other structural and permanent enclosure elements of building. Limit clearance to ½" where furring is shown for enclosure or concealment of ducts, but allow for insulation thickness, if any. Where possible, locate insulated ductwork for 1" clearance outside of insulation. In finished and occupied spaces, conceal ductwork from view by locating in mechanical shafts, hollow wall construction or above suspended ceilings, unless specifically noted as "Exposed". Do not encase horizontal runs in solid partitions, except as specifically shown. Coordinate layout with suspended ceiling and lighting layouts and similar finished work.

3.2.5 Internally Lined Ductwork: Cover leading and trailing edge of duct liner with sheet metal nosing zee.

3.2.6 Electrical Equipment Spaces: Do not route ductwork through transformer vaults or other electrical equipment spaces and enclosures.

3.2.7 Penetrations: Where ducts pass through interior partitions and exterior walls, and are exposed to view, conceal space between construction opening and duct or duct insulation with sheet metal flanges of same gauge as duct. Overlap opening on 4 sides by at least 1½". Fasten to duct and substrate. Where ducts pass through fire-rated floors, walls, or partitions, provide firestopping between duct and substrate.

3.2.8 Coordination: Coordinate duct installations with installation of accessories, dampers, coil frames, equipment, controls and other associated work of ductwork system.

3.2.9 Installation: Install metal ductwork in accordance with SMACNA HVAC Duct Construction Standards. Fan discharge outlet ducts shall be installed correctly with regard to "system effect" per AMCA Publication 201.

3.3 Installation of Flexible Ducts:

3.3.1 Maximum Length: For any duct run using flexible ductwork, do not exceed 5'-0" extended length. Flexible duct shall only be allowed as detailed on the drawings.

3.3.2 Installation: Install in accordance with Section III of SMACNA's "HVAC Duct Construction Standards, Metal and Flexible". Support flexible ducts to eliminate pinching and kinking which would restrict flow.

3.3.3 Peel back insulation and slide the inner core over the spin-in or diffuser neck, seal with duct sealant and install Panduit strap tightly. Slide insulation back over the inner core and install another Panduit strap over the insulation outer jacket. Tape is not acceptable.

3.3.4 Seal all exposed edges of fiberglass insulation with glassfab and mastic.

3.4 Leakage Tests: After each duct system is completed, test for duct leakage in accordance with Sections 3 and 5 of the SMACNA HVAC Air Duct Leakage Test Manual. Test pressure shall be equal to pressure class of duct, less 0.5" static pressure. Repair leaks and repeat tests until total leakage is less than 5% of system design air flow for low pressure systems and less than 1% for systems rated over 3".

3.5 Equipment Connections: Connect metal ductwork to equipment as indicated, provide flexible connection for each ductwork connection to equipment mounted on vibration isolators, and/or equipment containing rotating machinery. Provide access doors as indicated.

3.6 Clean ductwork internally free of dust and debris. Clean external surfaces of foreign

substances which might cause corrosive deterioration of metal or, where ductwork is to be painted, might interfere with painting or cause paint deterioration. Keep ducts closed with poly during construction to prevent contamination by construction dust and debris.

3.7 Balancing: Refer to Division-23 section "Testing, Adjusting, and Balancing" for air distribution balancing of metal ductwork; not work of this section. Seal any leaks in ductwork that become apparent in balancing process.

3.8 System Adjustment: Adjust the system to provide functional operation to the extent possible, and leave ready for Testing and Balancing work. It is not the intent of this section to provide final testing and balancing, but to leave the system operational with a minimum of noise.

END OF SECTION 23 31 13

SECTION 23 33 00 - DUCTWORK ACCESSORIES

1 GENERAL

1.1 Drawings and general provisions of Contract, including General and Supplementary Conditions and Division-1 Specification sections, apply to work of this section.

1.2 Division-23 Basic Mechanical Materials and Methods sections apply to work of this section.

1.3 Extent of ductwork accessories work is indicated on drawings and in schedules, and by requirements of this section.

1.4 Refer to other Division-23 sections for testing, adjusting, and balancing of ductwork accessories; not work of this section.

1.5 Codes and Standards:

1.5.1 SMACNA Compliance: Comply with applicable portions of both SMACNA "HVAC Duct Construction Standards, Metal and Flexible" and "Fire, Smoke and Radiation Damper Installation Guide for HVAC Systems".

1.5.2 UL Compliance: Construct, test, and label fire dampers in accordance with UL Standard 555 "Fire Dampers and Ceiling Dampers". Construct, test and label smoke dampers in accordance with UL Standard 555S "Leakage Rated Dampers for use in Smoke Control Systems" .

1.5.3 NFPA Compliance: Comply with applicable provisions of NFPA 90A "Air Conditioning and Ventilating Systems" pertaining to installation of ductwork accessories.

1.6 Approval Submittals:

1.6.1 Product Data: Submit manufacturer's technical product data for each type of ductwork accessory, including dimensions, capacities, and materials of construction; and installation instructions as follows:

Low pressure manual dampers
Control dampers
Fire dampers
Smoke dampers
Duct access doors
Flexible connections

1.6.2 O&M Data Submittals: Submit manufacturer's maintenance data including parts lists for fire dampers, smoke dampers. Include this data, product data, and a copy of approval submittals in O&M manual.

2 PRODUCTS

2.1 Dampers:

2.1.1 Low Pressure Manual Dampers: Provide 16 gauge dampers of single-blade type (12"

maximum blade width) or multiblade type. Damper blades to be gang-operated from a single shaft with nylon or ball bearings on each end. Provide indexed locking quadrant. Parallel or opposed blade style is acceptable. Provide 2" standoff on locking quadrant for externally insulated duct.

2.1.2 Control Dampers: Extruded aluminum (6063-T5) damper frame shall not be less than 0.080" in thickness. Damper frame shall be 4" deep x 1", with duct mounting flanges on both sides of frame. Damper frame shall have a 2" mounting flange on the rear of the damper when installed as Extended Rear Flange install type. Aluminum frame shall be clear anodized to a minimum thickness of 0.7 mil deep. Frame shall be assembled using stainless steel screws. Welded frames shall not be acceptable. Actuators (motors) are provided by mechanical contractor.

2.1.2.1 Blades shall be maximum 6.4" deep extruded aluminum (6063-T5) air-foil profiles with a minimum wall thickness of 0.06", clear anodized to a minimum thickness of 0.7 mil deep.

2.1.2.2 Blade seals shall be extruded silicone, secured in an integral slot within the aluminum blade extrusions and shall be mechanically fastened to prevent shrinkage and movement over the life of the damper. Adhesive or clip-on type blade seals will not be approved.

2.1.2.3 Hexagonal control shaft shall be $^{7}/_{16}$". It shall have an adjustable length and shall be an integral part of the blade axle. A field-applied control shaft shall not be acceptable. All parts shall be stainless steel.

2.1.2.4 Linkage hardware shall be aluminum and stainless steel, installed in the frame side, out of the airstream, and accessible after installation. Linkage hardware shall be complete with stainless steel cup-point trunnion screws to prevent linkage slippage. Linkage that consists of metal rubbing metal will not be approved.

2.1.2.5 Dampers shall be designed for operation in temperatures ranging from -40°F to 212°F.

2.1.2.6 Dampers shall be AMCA rated for Leakage Class 1A at 1 in w.g. static pressure differential. Standard air leakage data to be certified under the AMCA Certified Ratings Program.

2.1.2.7 Dampers shall be custom made to required size, with blade stops not exceeding 1¼" in height.

2.1.2.8 Dampers shall be opposed blade for modulating dampers or parallel blade action for open/shut dampers.

2.1.2.9 Dampers shall be installed in the following manner: Installed in Duct

2.1.2.10 Installation of dampers must be in accordance with manufacturer's current installation guidelines, provided with each damper shipment.

2.1.2.11 Field supplied intermediate structural support is required to resist applied pressure loads for dampers that consist of two or more sections in both height and width.

2.1.2.12 Acceptable Manufacturers: Subject to compliance with requirements, provide control dampers by TAMCO (T.A. Morrison & Co, Inc), Ruskin TED50CD, Greenheck VCD33, or approved equal.

2.1.3 Acceptable Manufacturers: Subject to compliance with requirements, provide dampers by Air Balance, American Warming & Ventilating, Arrow Louver and Damper, Penn Ventilator Co., or Ruskin Mfg. Co.

2.2 Fire and Smoke Dampers:

2.2.1 Fire Dampers: Provide curtain type fire dampers, UL classified and labeled per UL 555, of types and sizes indicated. Construct casings and blades of galvanized steel. Damper shall not restrict duct free area when open. Dampers shall be rated for dynamic closure under flow and pressure. Provide sleeves and mounting angles. Provide fusible link rated at 160 to 165° F unless otherwise indicated. Provide damper with positive lock in closed position. All dampers shall be spring activated. Basis of design:

1-1/2 HR: Ruskin IBD2 - Style B for rectangular, Style CR for round, Style CO for oval.

1-1/2 HR: Ruskin IBDT for transfer grilles in narrow partitions.

3 HR: Ruskin IBD23 - Style B for rectangular, Style CR for round, Style CO for oval.

2.2.2 Smoke Dampers: Provide motorized smoke dampers, UL classified under UL-555S, of types and sizes indicated. Construct frame and blades of galvanized steel. Provide sleeves. Provide damper assembly complete with electric operator that will fail safe if fire interrupts operational power. Provide for remote testing or resetting capability after response to smoke detector operation. Entire assembly shall be rated at least leakage class II (10 CFM/sq. ft. at 1" w.g. at 250□F). Basis of design:

Systems to 1,500 FPM duct velocity or 2.5" w.g.: Class II Ruskin SD36.

Systems over 1,500 FPM duct velocity or 2.5" w.g.: Class I, airfoil blades, Ruskin SD60.

2.2.3 Fire/Smoke Dampers: Provide motorized combination fire/smoke dampers, UL classified under UL-555 and UL-555S in types and sizes indicated, with casing constructed of galvanized steel, and galvanized steel interlocking blades. Provide factory furnished sleeves and angles. Provide damper assembly complete with electric operator that will fail safe if fire interrupts operational power. For low leakage applications, entire assembly shall be rated at least leakage class I (4 CFM / sq. ft. at 1" w.g. at 250□F. Entire assembly shall be rated at least leakage class II (10 CFM/sq. ft. at 1" w.g. at 250□F). Provide for remote testing or resetting capability after response to smoke detector operation. Provide fusible link rated at 160 - 165□F unless otherwise indicated that will close the damper under fire conditions and not permit operation by actuator until link is replaced. // Provide firestat rated at 160 - 165□F unless otherwise noted to electrically close the damper under fire conditions with remote testing or resetting capability after response to firestat operation, and with position indicator switches. Basis of design:

Systems to 1,500 FPM duct velocity or 2.5" w.g.: Class II, Ruskin FSD36.

Systems over 1,500 FPM duct velocity or 2.5" w.g.: Class I, airfoil blades, Ruskin FSD60.

2.2.4 Acceptable Manufacturers: Subject to compliance with requirements, provide fire and smoke dampers by Air Balance, Inc., American Warning & Ventilating, Arrow Louver and Damper, Penn Ventilator Co., or Ruskin Mfg. Co.

2.3 Turning Vanes: Provide manufactured or fabricated single wall turning vanes and vane runners, constructed in accordance with SMACNA "HVAC Duct Construction Standards".

2.4 Duct Access Doors:

2.4.1 General: Provide duct access doors of size indicated, or as required for duty indicated.

2.4.2 Construction: Construct of same or greater gauge as ductwork served. Provide insulated doors for insulated ductwork. Provide flush frames for uninsulated ductwork, extended frames for externally insulated duct. Provide one side hinged, other side with one handle-type latch for doors 12" high and smaller, 2 handle-type latches for larger doors.

2.4.3 Acceptable Manufacturers: Subject to compliance with requirements, provide access doors by Air Balance, Inc., Duro Dyne Corp., Ruskin Mfg. Co., or Ventfabrics, Inc.

2.5 Flexible Connections:

2.5.1 General: Provide flexible duct connections wherever ductwork connects to vibration isolated equipment. Construct flexible connections of neoprene-coated flameproof fabric crimped into duct flanges for attachment to duct and equipment. Make airtight joint. Provide adequate joint flexibility to allow for thermal, axial, transverse, and torsional movement, and also capable of absorbing vibrations of connected equipment.

2.5.2 Acceptable Manufacturers: Subject to compliance with requirments, provide products by one of the following: Duro Dyne Corp., Flexaust (The) Co., or Ventfabrics, Inc.

3 EXECUTION

3.1 Examine areas and conditions under which ductwork accessories will be installed. Do not proceed with work until unsatisfactory conditions have been corrected in manner acceptable to Installer.

3.2 Installation of Ductwork Accessories:

3.2.1 Install ductwork accessories in accordance with manufacturer's installation instructions, with applicable portions of details of construction as shown in SMACNA standards, and in accordance with recognized industry practices to ensure that products serve intended function.

3.2.2 Install balancing dampers at all main ducts adjacent to units in return air, outside air and where indicated.

3.2.3 Install control dampers in the outside air duct for each air handler. Damper operator provided by control contractor.

3.2.4 Install turning vanes in square or rectangular 90□ elbows in supply, return, and exhaust air systems, and elsewhere as indicated.

3.2.5 Install access doors to open against system air pressure, with latches operable from either side, except outside only where duct is too small for person to enter. Install on entering air side of reheat coils. Install at smoke detectors. Install at fire dampers and smoke dampers.

Opening size shall be minimum 12”x12” for servicing fire and smoke dampers. Provide label with 1-1/2" letters to indicate location of fire protection devices.

3.2.6 Install flexible connections in ductwork such that the clear length of the connector is approximately two inches. Provide thrust restraints as required. Flexible material shall not be so slack as to take a definite concave or convex shape during fan operation.

3.2.7 Coordinate with other work, including ductwork, as necessary to interface installation of ductwork accessories properly with other work.

3.2.8 Install fire dampers within fire walls and floors at locations shown on the mechanical drawings. Install in strict accordance with the manufacturer's printed instructions, NFPA 90A, and UL 555. Basis of design installation is detailed on the drawings.

3.2.9 Install smoke dampers on both sides of air handling units (to include filters) in units over 15,000 cfm. Install at smoke partitions. All locations are shown on the mechanical drawings. Install in strict accordance with the manufacturer's printed instructions, NFPA 90A, and UL 555S. Basis of design installation is detailed on the drawings.

3.3 Fire and Smoke Dampers: Notify Engineer at least 24 hours in advance of ceiling installation or chase closure so that complete fire and smoke damper installation can be observed. A copy of the manufacturer’s printed installation instructions shall be available at the site.

3.4 Operate installed ductwork accessories to demonstrate compliance with requirements. Test for air leakage while system is operating. Repair or replace faulty accessories as required to obtain proper operation and leakproof performance.

3.5 Adjusting And Cleaning:

3.5.1 Adjusting: Adjust ductwork accessories for proper settings. Install fusible links in fire dampers and adjust for proper action.

3.5.2 Final positioning of manual dampers is specified in Division-23 section "Testing, Adjusting, and Balancing". However, the system shall be left functional with all dampers open or throttled.

3.5.3 Cleaning: Clean factory-finished surfaces. Repair any marred or scratched surfaces with manufacturer's touch-up paint.

3.5.4 Furnish extra fusible links to Owner, one link for every 10 installed of each temperature range; obtain receipt.

END OF SECTION 23 33 00

THIS PAGE INTENTIONALLY LEFT BLANK

SECTION 23 34 00 - FANS

1 GENERAL

1.1 Drawings and general provisions of Contract, including General and Supplementary Conditions and Division-1 Specification sections, apply to work of this section.

1.2 Division-23 Basic Mechanical Materials and Methods sections apply to work of this section.

1.3 Extent of fan work required by this section as indicated on drawings and schedules, and by requirements of this section.

1.4 Coordination:

1.4.1 Refer to Division-7 sections for installation of prefabricated roof curbs; not work of this section. Furnishing prefabricated roof curbs is part of this section's work.

1.4.2 Refer to Division-23 section "Testing, Adjusting, and Balancing" for balancing of fans.

1.4.3 Refer to Division-23 HVAC control systems sections for control work required in conjunction with fans.

1.4.4 Refer to Division-26 sections for power supply wiring from power source to power connection on fans. Division-26 work will include starters, disconnects, and required electrical devices, except where specified as furnished, or factory-installed, by manufacturer.

1.5 Codes and Standards:

1.5.1 AMCA Compliance: Provide fans which have been tested and rated in accordance with AMCA standards, and bear AMCA Certified Ratings Seal.

1.5.2 UL Compliance: Provide fans which are listed by UL and have UL label affixed.

1.6 Approval Submittals:

1.6.1 Product Data: Submit manufacturer's technical data for fans, including specifications, capacity ratings, dimensions, weights, materials, accessories furnished, and installation instructions. Submit assembly-type drawings showing unit dimensions, construction details, methods of assembly of components, and field connection details. Include statement that resin selection is suitable for chemical resistance to the specific application at 170ºF.

1.6.1.1 Fans

1.6.1.2 Vibration Control

1.7 O&M Data Submittals: Submit maintenance data and parts list for each type of fan, accessory, and control. Include these data, a copy of approved submittals, and wiring diagrams in O&M Manual.

2 PRODUCTS

2.1 General: Except as otherwise indicated, provide standard prefabricated fans of type and size indicated, modified as necessary to comply with requirements, and as required for complete installation. Provide accessories as listed in the schedule on the drawings and as described herein. Motors shall be high efficiency per Division-23 section "Motors".

2.2 Acceptable Manufacturers: Subject to compliance with requirements provide fans manufactured by Acme, Greenheck, Loren Cook, Penn or approved equal unless otherwise noted herein.

2.3 Centrifugal Ceiling Exhausters:

2.3.1 Fan Assembly: Provide steel housing, plastic or aluminum grille, backdraft damper, statically and dynamically balanced fan wheel, permanently lubricated motor with internal thermal overloads, vibration isolation and all required mounting hardware and brackets. Provide acoustically treated housing for all fans larger than 60 cfm. Mounting type shall be as indicated on the drawings or on the schedule.

2.3.2 Connectors: Provide adaptors, connectors, and eave elbows as required to connect fan discharges to outlets.

2.3.3 Outlets: Provide where shown on the drawings (or required by the installation) wall caps, vent caps, or roof jacks, each with birdscreen, to match fans and surrounding construction.

2.4 In-Line Centrifugal Fans:

2.4.1 Housing: Provide round aluminum or square weather tight housing constructed of steel and painted inside and out with an epoxy finish. Provide venturi type inlet.

2.4.2 Fan Wheels: Provide aluminum air foil type, backward curved, statically and dynamically balanced.

2.4.3 Drive: Provide direct or belt drive as scheduled with pre-lubricated, ball bearing, continuous duty type motors. Provide vibration isolation equipment for the entire drive.

2.4.4 Isolation and Support: Provide spring type vibration isolators and fan support brackets.

2.5 Fan Accessories and Features: Where indicated on the schedule or drawings provide accessories and features listed herein.

1 Direct drive: Direct drives shall have multispeed motors or speed controllers to achieve scheduled flow.

2 Bird Screens: Provide bird screens of 1/2" mesh aluminum or galvanized steel hardware cloth.

3 Backdraft Dampers: Provide where indicated aluminum louvered dampers with felt-edged blades and nylon bearings.

4 Disconnect Switches: Provide factory installed local disconnecting means.

5 Thermal Overloads: Provide internal thermal overloads.

6 Speed Controller: Provide where indicated solid state speed controller for remote mounting.

2.6 Vibration Isolation: Mount fans on vibration isolators in accordance with the requirements of Division-23 section "Vibration Isolation" and the following list.

2.6.1 Hangers: Type HA1, HA2, HA3.

3 EXECUTION

3.1 General: Except as otherwise indicated or specified, install fans in accordance with manufacturer's installation instructions and recognized industry practices to insure that fans serve their intended function.

3.2 Coordinate fan work with work of walls and ceilings as necessary for proper interfacing. Framing of openings, caulking, and curb installation is not work of this section.

3.3 Ductwork: Refer to Division-23 section "Ductwork". Connect ducts to fans in accordance with manufacturer's installation instructions. Provide flexible connections in ductwork at fans.

3.4 Install fans on vibration isolation equipment as required. Set level and plumb.

3.5 Electrical Wiring: Install electrical devices furnished by manufacturer but not specified to be factory-mounted. Furnish copy of manufacturer's wiring diagram submittal to electrical Installer. Verify that electrical wiring installation is in accordance with manufacturer's submittal and installation requirements of Division-26 sections. Verify proper rotation direction of fan wheels. Do not proceed with equipment start-up until wiring installation is acceptable to equipment installer.

3.6 Remove shipping bolts and temporary supports within fans. Adjust dampers for free operation.

3.7 Testing: After installation of fans has been completed, test each fan to demonstrate proper operation of units at performance requirements specified. When possible, field correct malfunctioning units, then retest to demonstrate compliance. Replace units which cannot be satisfactorily corrected.

3.8 Cleaning: Clean factory-finished surfaces. Remove all tar and soil. Repair any marred or scratched surfaces with manufacturer's touch-up paint.

END OF SECTION 23 34 00

THIS PAGE INTENTIONALLY LEFT BLANK

SECTION 23 37 13 - GRILLES, REGISTERS AND CEILING DIFFUSERS

1 GENERAL

1.1 Drawings and general provisions of Contract, including General and Supplementary Conditions and Division-1 Specification sections, apply to work of this section.

1.2 Division-23 Basic Mechanical Materials and Methods sections apply to work of this section.

1.3 Extent of air outlets and inlets work is indicated by drawings and schedules, and by requirements of this section.

1.4 Refer to other Division-23 sections for ductwork and duct accessories required in conjunction with air outlets and inlets and for balancing of air outlets and inlets; not work of this section.

1.5 Codes and Standards:

1.5.1 ADC Compliance: Test and rate air outlets and inlets in certified laboratories under requirements of ADC 1062 "Certification, Rating and Test Manual". Provide air outlets and inlets bearing ADC Certified Rating Seal.

1.5.2 NFPA Compliance: Install air outlets and inlets in accordance with NFPA 90A "Standard for the Installation of Air Conditioning and Ventilating Systems".

1.6 Approval Submittals:

1.6.1 Product Data: Submit manufacturer's technical product data for air outlets and inlets indicating construction, finish, and mounting details.

1.6.2 Performance Data: For each type of air outlet and inlet furnished, provide aspiration ability, temperature and velocity traverses, throw and drop, and noise criteria ratings. Indicate selections and data as required.

1.7 O&M Data Submittals: Submit cleaning instructions for finishes and spare parts lists. Include this data and a copy of approval submittals in O&M manual.

2 PRODUCTS

2.1 General:

2.1.1 Except as otherwise indicated, provide manufacturer's standard grilles, registers, and ceiling diffusers where shown; of size, shape, capacity and type indicated; constructed of materials and components as indicated, and as required for complete installation.

2.1.2 Manufacturers not listed in the following specification will not be considered for approval unless accepted by addendum prior to bid.

2.1.3 Performance: Provide grilles, registers and ceiling diffusers that have, as minimum, temperature and velocity traverses, throw and drop, and noise criteria ratings for each size device equal to the basis of design.

2.1.4 Ceiling and Wall Compatibility: Provide grilles, registers and diffusers with border styles that are compatible with adjacent wall and ceiling systems, and that are specifically manufactured to fit into ceiling module or wall with accurate fit and adequate support. Refer to general construction drawings and specifications for types of ceiling systems and walls which will contain each type of ceiling diffuser, grille, or register.

2.1.5 Appearance: All grilles and registers shall be aluminum construction and all diffusers shall be aluminum construction, unless otherwise noted, with uniform matching appearance for each type of outlet. Ceiling mounted grilles and registers shall be set to be sight tight from the predominant exposure.

2.1.6 Finish: All ceiling mounted grilles, registers, and diffusers shall be finished with baked white enamel. Wall and door mounted grilles and registers shall be finished with clear anodized finish baked white enamel.

2.2 Acceptable Manufacturers: Subject to compliance with requirements, provide products by Titus, Price, Greenheck, or Metal Aire.

2.3 Square Ceiling Diffusers: Provide square face, adjustable, 360 degree pattern diffusers with one-piece stamped cones, no corner joints, round necks. Provide lay-in panel as required.

2.4 Round Ceiling Diffusers: Provide round face, adjustable diffusers with one-piece cones; no seams.

2.5 Ceiling Linear Diffusers: Provide linear supply and return slot diffusers with full 180 degree adjustable air pattern and complete flow control including blank off. Number and size of slots are shown on the drawings. Provide joining and alignment strips, end caps, mitred corners, and frame type suitable for ceiling installation. Provide 1 inch slot unless otherwise noted on the drawings. Provide insulated plenums for supply diffusers.

2.6 Return and ExhaustGrilles: Provide return grilles with one set of 45 degree fixed louvers, parallel to the long dimension. Provide mounting frame for all wall and plaster ceiling installations.

3 EXECUTION

3.1 Coordinate installation with ceiling and light fixture installation. Locate ceiling outlets as indicated on architectural Reflected Ceiling Plans. Unless otherwise indicated, locate ceiling outlets in the center of acoustical ceiling modules with sides parallel to the grid.

3.2 Install air outlets and inlets in accordance with manufacturer's written instructions and in accordance with recognized industry practices to insure that products serve intended functions.

3.3 Coordinate with other work, including ductwork and duct accessories, as necessary to interface installation of air outlets and inlets with other work.

3.4 Set air volumes to values shown on the drawings so that the system is functional. Leave ready for test and balance contractor.

3.5 Furnish to Owner three operating keys for each type of outlet and inlet that require them; obtain receipt.

END OF SECTION 23 37 13

THIS PAGE INTENTIONALLY LEFT BLANK

SECTION 23 37 26 - WALL LOUVERS

1 GENERAL

1.1 Drawings and general provisions of Contract, including General and Supplementary Conditions and Division-1 Specification sections, apply to work of this section.

1.2 Division-23 Basic Mechanical Materials and Methods sections apply to work of this section.

1.3 Extent of wall louver work is indicated by drawings and schedules, and by the requirements of this section.

1.4 Refer to other Division-23 sections for ductwork, duct accessories and controls work.

1.5 AMCA Compliance: Test and rate louvers in accordance with AMCA Standard 500. Provide AMCA certified rating seal. Ratings based on tests and procedures performed in accordance with AMCA 500-L and complying with the AMCA 511 Certified Ratings Program. AMCA Certified Ratings Seal applies to air performance, water penetration and wind driven rain ratings.

1.6 Product Qualifications:

1.6.1 Florida Product Approved Louvers:

1. Miami-Dade County, Florida Notice of Acceptance (NOA).
2. Florida Building Code Approval.
3. Louver shall be certified to Florida Building Code Testing Application Standards TAS 100(A) (Wind Driven Rain Resistance), TAS 201 (Large Missile Impact), TAS 202 (Uniform Static Air Pressure) and TAS 203 (Cyclic Wind Loading).
4. AMCA Listed for compliance to AMCA 540 Level E and AMCA 550 standards.

1.7 Approval Submittals:

1.7.1 Product data: Submit manufacturer's technical product data for louvers including: model number, accessories furnished, construction, finish, mounting details, performance data.

1.8 O&M Data Submittals: Submit maintenance data, including cleaning of finishes and a copy of approval submittals. Include in O&M manual.

2 PRODUCTS

2.1 Acceptable Manufacturers: Subject to compliance with requirements, submit products by Ruskin, Greenheck, Arrow, American Warming and Ventilating, or AMCA labeled approved equal.

2.2 General: Except as otherwise indicated, provide manufacturer's standard louvers where shown; of size, shape, capacity and type indicated; constructed of materials and components as indicated, and as required for complete installation. Provide Kynar 500 coated, corrosion resistant finish and 5 year warranty; color to be selected by the Owner.

2.3 Substrate Compatibility: Provide Florida Product approved louvers with 9 inch frame with flange and sill extension piece that are compatible with adjacent substrate, and that are

specifically manufactured to fit into construction openings with accurate fit and adequate support, for weatherproof installation. Refer to general construction drawings and specifications for types of substrate which will contain each type of louver.

2.4 Materials:

2.4.1 Florida Product Approved Louvers: Construct of aluminum extrusions, Alloy 6063-T6 0.081" thick for frame and 0.081" thick for front blades and 0.060" thick for back blades. Weld units or use stainless steel fasteners.

2.5 Sill Flashing: Formed aluminum, 0.080" thick, upturned sides to prevent water leakage.

2.6 Installation Angles: Material: 1.375 x 2.25 inch x 0.125 inch thick continuous aluminum angles around louver perimeter for installation in concrete, deep CMU, steel and wood substrate wall systems.

2.7 Installation Plates: Material: 0.250 inch (6.4 mm) thick continuous aluminum flat or zee plates for installation in thin CMU substrate wall systems.

2.8 Louver Screens: On inside face of exterior louvers, provide 1/2" square mesh anodized aluminum wire bird screens mounted in removable extruded aluminum frames.

2.9 Stationary Florida Product Approved Louvers: Hurricane and impact rated louvers, basis of design is Greenheck EHV-901D.

2.10 Performance Data

2.10.1 EHV-901D:

1. Performance Ratings: AMCA licensed.
   a. Based on testing 48 inches x 48 inches size unit in accordance with AMCA 500-L.
2. Free Area: 42 percent, nominal.
3. Free Area Size: 6.66 square feet.
4. Maximum Recommended Air Flow through Free Area: 2,155 feet per minute.
5. Air Flow: 10,431 cubic feet per minute.
6. Maximum Pressure Drop (Intake): 0.60 inches w.g..
7. Water Penetration: Beginning point of water penetration of 0.01 ounce per ft² of free area shall be above 1,250 feet per minute free area velocity.
8. Wind Load Rating: Maximum wind load of ±150 PSF.
9. AMCA 500-L Wind Driven Rain Performance: 99.9 percent effective at preventing water penetration through louver when tested at 50 miles per hour wind with 8 inches per hour rainfall and 2,155 feet per minute airflow through the free area. Penetration Class 'A' with Discharge Class (Intake) '3' in accordance with AMCA 500-L Wind Driven Rain Test.

3 EXECUTION

3.1 Install where shown on the drawings in accordance with the manufacturer's printed instruction and Florida Product Approval. Exercise care to prevent scratches.

3.2 Isolate dissimilar metals per the manufacturer's recommendations.

3.3 Verify size of louvers shown on drawings prior to fabrication. Coordinate with wall openings. Sizes may be altered subject to approval by Engineer provided free area remains approximately the same as indicated.

END OF SECTION 233726

THIS PAGE INTENTIONALLY LEFT BLANK

SECTION 23 81 03 - OUTSIDE AIR PRECONDITIONING UNITS

1 GENERAL

1.1 Drawings and general provisions of Contract, including General and Supplementary Conditions and Division-1 Specification sections, apply to work of this section.

1.2 Division-23 Basic Mechanical Materials and Methods sections apply to work of this section.

1.3 Refer to other Division-23 sections for testing, adjusting, and balancing of air conditioning units (OAUs).

1.4 Approval Submittals:

1.4.1 Product Data: Submit manufacturer's technical product data, including dimensions, ratings, electrical characteristics, weight, capacities, materials of construction, and installation instructions.

Preconditioning units
Vibration isolation
Refrigerant Line Shop Drawings

1.5 Test Reports and Verification Submittals:

1.5.1 Submit Startup Report by factory-trained representative.

1.6 O&M Data Submittals: Submit manufacturer's maintenance data including parts lists. Include these data, a copy of approval submittals, product data, and wiring diagrams in O&M manual.

2 PRODUCTS

2.1 Quality Assurance:

2.1.1 Construct refrigeration system in accordance with ASHRAE 15 (ANSI B 9.1) "Safety Code for Mechanical Refrigeration".

2.1.2 Provide units with an EER that meets the Florida Energy Efficiency Code and the schedules on the drawings.

2.1.3 Electrical installation will comply with the requirements of Division 26, National Electrical Code.

2.1.4 Provide the units produced by a recognized manufacturer who maintains a local service agency and parts stock.

2.1.5 Equivalent selections must have airflow rates, external static pressures, coil face velocities, filter face velocities and air side pressure drop that equal or exceed specified performance.

2.1.6 Startup supervision will be provided by the Manufacturer.

2.1.7 Equipment within the units will be ETL/UL listed where applicable.

2.1.8 Acceptable Manufacturers: Subject to compliance with requirements provide units by Dectron, Multistack, or approved equal.

2.2 General:

2.2.1 Units shall be factory-assembled, wired and tested. All controls shall be factory-adjusted and preset to the design conditions.

2.2.2 Provide factory fabricated modular DOAS units and remote condenser units having overall dimensions as shown on the construction plans. Physical dimensions and unit arrangement are designed and manufactured specifically to meet the requirements shown on the equipment plans and specifications.

2.2.3 The units will be designed to maintain optimum comfort levels.

2.2.4 Refer to the unit schedule to determine the performance of internal components.

2.2.5 The indicated total static pressure for each air stream must be equal to the sum of external static pressures and internal static including system effects and safety.

2.2.6 All deviations from the specified must be clearly indicated on the submittal drawings.

2.2.7 The contractor is responsible for all additional expenses associated with the substitution of the specified product.

2.2.8 Units will be fully inspected by the engineer and if required, owner or representative.

2.3 Casings:

2.3.1 All panels will be 1” thick composite panels, constructed of cast and extruded aluminum faming components.

2.3.2 Structural-strength acrylic adhesive and silicone caulk beads create a dual sealing mechanism.

2.3.3 Non-Thermal Break. Panels consist of a closed cell insulating foam sandwiched between corrugated plastic stabilizers and pre-finished aluminum sheets.

2.3.4 Inner panels will be 1” 28GA aluminum.

2.3.5 Outer panels will be 1” 28 GA Aluminum.

2.3.6 R-value for 1” panel: 5

2.4 Access doors:

2.4.1 Access doors will be the same construction as the panels.

2.4.2 The removable door panels will be aluminum.

2.4.3 Each access door will have panel blocks.

2.5 Drain Connection: The drain pan will be 304 Stainless Steel, 1-1/2" OD PVC Drain connection with internal P-Trap.

2.6 Piping connections: All piping connections that extend to the exterior of the casing will do so through neoprene rubber seals. Cooling Coils will be sealed from the interior and exterior of the unit.

2.7 Fan section Fan will be directly mounted on the panel. Electric heaters will be shipped loose and mounted on the supply air opening.

2.8 Fans:

2.8.1 Single-sided intake, rear-curved motor impeller, energy-optimized for operation without spiral housing through special blade design with rotating, vaneless diffuser for high efficiency and with favorable acoustic behavior.

2.8.2 Impeller: ø 350 mm.

2.8.3 Centrifugal impeller is made of aluminum (AlMg3) or steel metal coated with quartz grey (RAL7039). External rotor motor statically and dynamically balanced according to DIN ISO 21940-11.

2.8.4 Impeller with rotating diffuser.

2.8.5 7 rear-curved, curved blades and galvanized inlet nozzle.

2.8.6 Design with integrated electronics Over-temperature protection of the device electronics through active temperature management.

2.8.7 Motor is made of die casted aluminum.

2.8.8 Insulation class F and Protection Class IP54, the permissible ambient temperature is -4°F (-20°C) to +140°F (60°C).

2.8.9 Low noise commutation, integrated motor protection, 100% speed controllable.

2.8.10 IP54 Rating for Fan Protection.

2.9 Refrigeration System:

2.9.1 Direct expansion evaporative coil

1. The coils will be designed for use with R-454B refrigerant and constructed of copper tubes with aluminum fins mechanically bonded to the tubes with 16GA Stainless Steel end casings. Fin design will be sine wave rippled.

2. The coils will be helium leak tested and be furnished with factory-installed thermostatic expansion valves. The tubes will have a nominal diameter of ⅜" and 0.012" thick rifled wall. Heat transfer fins will have a nominal thickness of 0.010''.

3. Each coil will have air pressure tested up to 900 psig under water, completely dehydrated and pressure tested with refrigerant.

4. The coils will be coated with 16,000 hours (Salt Spray Corrosion ASTM B117) AA corrosion protection coating.

2.9.2 Electronic expansion valve

1. Electronic Expansion Valve (EEV) will be designed for installation in refrigerant circuits as the refrigerant expansion device. The superheat will be used as the trigger for the control signal. The EEV will be double-acting. The EEV will be joined to the circuit by braze welding the copper fittings to the condenser outlet (IN) and the evaporator inlet (OUT) pipes. The EEV will be able to operate up to 653 psi (45 bars). The EEV will have 750 control steps. The step speed will be 50ms (150 steps/second).

2. Electronic Expansion Valve (EEV) will be always in compartment out of air stream accessible.

2.9.3 Hot gas reheat coil

1. Coils will be designed for use with R-454B refrigerant and constructed of copper tubes with aluminum fins mechanically bonded to the tubes with 16GA Stainless Steel end casings. Fin design will be sine wave rippled.

2. Coils will be helium leak tested and furnished with factory. The tubes will have a nominal diameter of ⅜” and 0.012” thick rifled wall. Heat transfer fins will have a nominal thickness of 0.010’’.

3. Each coil will have air pressure tested up to **900** psig under water, completely dehydrated.

4. Coils will be coated with 16,000 hours (Salt Spray Corrosion ASTM B117) AA corrosion protection coating.

2.9.4 Compressors

1. Digital compressors will be hermetic scroll type with thermal overload protection.

2. The compressor will be capable of modulation from 25–100% of its capacity and will provide continuous and precise modulation.

3. Compressors will be individually circuited and mounted in an isolated vestibule, out of the air stream, with service access.

4. All refrigeration circuits will be equipped with low pressure and high-pressure safety controls, service type fittings on high and low-pressure sides and factory installed liquid line filter driers.

5. The scroll compressor will be equipped with an external solenoid valve specified by compressor manufacturer, suction and discharge piping will be sized for 100% refrigerant mass flow.

6. The scroll compressor will have a minimum 20-minute cycle on time and a minimum 20-minute cycle off time to prolong scroll compressor life.

7. A crankcase heater will be installed for each digital compressor. Polyol ester oil (POE OIL) will be used as the oil type of choice.

2.9.5 REMOTE AIR-COOLED CONDENSER

1. Each DOAS Unit will be equipped with air conditioning feature to reject all compressor heat to an outdoor air-cooled condenser.

2. The outdoor condenser will be equipped with a transformer and 24VAC control including contactor for fan motor.

3. The unit will be provided with a dry contact rated for 24VAC/5A to operate the remote outdoor condenser control.

4. Refrigeration circuit will include three-way refrigerant valve, receiver with pressure relief valve set at 650 psig sized to hold the outdoor condenser charge, pressure control valve and pressure differential valve, and two shutoff valves to isolate the outdoor condenser.

2.9.6 R454B Refrigerant: Refrigerant R454B is fully field supplied & charged by others.

2.10 Air Filters

2.10.1 Provide all filters of number, size and capacity as required for air handling system indicated on drawings. Filters are to be selected for a maximum face velocity of 500 fpm.

2.10.2 Filters: 2" thick MERV 13 efficiency (per ASHRAE Test Standard 52.2-2007) pleated filters.

2.10.3 Filters will have a nominal rating of 500 fpm. Each cell will be 16" x 20”.

2.10.4 The initial pressure drop will not exceed that indicated. Media will be approved and listed as Underwriters Laboratories Class 2 when tested according to UL Standard.

2.10.5 Filters will be side loading.

2.11 Outdoor Air Damper (Insulated)

2.11.1 OA Damper frame will have prefabricated aluminum extrusions. Damper blades shall be airfoil type, double wall, opposed and be made of aluminum extrusions. Air seal gaskets shall be made of synthetic rubber type TPE and EPDM. Dampers shall be thermally insulated. Complete blades shall have an insulation factor of R-2.29 and a temperature index of 55.

2.11.2 All drive shafts shall be located out of the air stream, and it shall be possible to install the actuators inside the cabinet without interference to the airflow.

2.11.3 The damper is AMCA rated for Leakage Class 1A at 1 in w.g. (0.25 kPa) differential static pressure.

2.11.4 The actuator for the damper is sized and installed by the factory. It has a feedback terminal so that the damper can regulate the airflow.

2.12 Electronics:

2.12.1 Control panels

1. The unit will be complete with an ETL listed and NEMA rated electrical control panel, which Include contactors, motor protectors, relays, and transformers.

2. All branch circuits will be individually protected and will include a low-voltage control circuit transformer.

3. Motors and compressors will be protected at all phases.

4. Units will be provided with phase and brown out protection that shuts down all motors in the unit if the electrical phases are more than 10% out of balance on voltage, 10% under design voltage or on phase reversal.

5. The control panel will be used to house, but not limited to:

   Microprocessor controller
   Valve and Temperature Control Boards
   Blower Contactors
   Fuses
   Fuse Holders
   Terminal Strips
   Phase monitors
   Universal Power Supply
   Transformers
   Super Heat Controllers

6. The control panel will be unit mounted, recessed to the unit and accessible from the exterior of the unit.

7. The control panel will be enclosed in an isolated compartment outside of the air stream.

2.13 Microprocessor: Microprocessor will feature a multitasking operating system compatible with the pCO5 Sistema family of devices, which includes programmable controllers, user terminals, gateways, communication devices and remote management devices. These devices will be interface-friendly with most Building Management Systems (BMS) available on the market. The controller will have been developed by CAREL. Microprocessors will be able to connect via Ethernet LAN to other pCO5 family controllers. Each device in the LAN will be able to exchange digital or analog variables with all the others, based on the application program used. Microprocessors will be able to connect via a pLAN (pCO Local Area Network) to the pGD range of terminals. Each Fieldbus serial port, whether built into the controller or installed via an optional card, will be able to connect to controlled field devices such as valve and damper actuators and external drivers (e.g. drivers for electronic

expansion valves, EVD Evolution). Each BMS serial port, whether built into the controller or installed via an optional card, will be able to connect to field-level, automation-level or management-level standard bus system BACnet. The real-time operating system (OS) will manage priorities to ensure the application program cycle time, 32bit data and floating-point numbers, and the Ethernet multimaster and multi-protocol connection. If equipped with a front panel, it will include a 6-backlit-button keypad which when pressed individually or in a combination will allow the operations of uploading an application program or commissioning. During regular operation and depending on the application program installed, the terminal will be able to edit the main operating parameters and to display the quantities measured, the active functions and any detected alarm.

The microprocessor will be equipped with the following features:

- Optimization of the memory occupied by the Operating System and the application program, of the boot time, of the time for loading the application program and of the cycle time.
- System response time optimization: the controller executes several processes in parallel, each managed with a different priority.
- Independent processes: each process, whether a protocol, USB port management, data and alarm log (data logger), works independently of the others.
- Runtime debug (on target).
- Native management of MS/TP multitasking protocol.
- Built-in web server, completely customizable, supports HTML standard and JavaScript. The 90 Mbyte memory can be used to store pages created using the most common website development tools. Dynamic methods (CGI, Common Gateway Interface) are available to read and write the application program variables. Other innovative functions include: the possibility to display the contents of the pGD1 terminal in the browser, display graphs of data recorded by the data logger and plot data from probes and energy meters in real time (variable trends).
- File server (FTP): the pCO5 public file system can be accessed in the local network via FTP. Consequently, an FTP client can be used to connect to the controller so as to upload updates, web pages and documents. The ".csv" (comma separated value) fi les exported by the data logger can be downloaded.
- Creation of accounts with different access privileges, associated to both a webserver and an FTP server.
- Connection of BACnet MSTP protocol with B-BC profile. Integrated USB peripheral which will be able to be used to update the controller and save web pages, documents and applications in flash memory, and to download the logs from the controller.
- Will be able to connect to up to 3 pGD1\pGDE terminals
- Will have universal inputs/outputs configurable via an application program for connecting active and passive probes, digital inputs, analog and PWM outputs.
- Will have label with QR code containing the MAC address that uniquely identifies the controller on the Ethernet network.

2.14 INPUTS AND OUTPUTS

The Microprocessor will be compatible for with the following:

- Analog inputs of type: NTC PTC, PT500, PT1000, 0-1VDC, 0-10VDC, 0-20mA, 4-20mA and 0-5V. Digital inputs of type: voltage-free contact and fast digital input.
- Analog outputs of type: 0-10VDC and PWM.

The control program will be factory developed to user specification, factory tested and loaded into the controller. Through the operator panel, the user will be able to set/perform the following functions:

1. Compressor auto/off mode
2. Blower auto/off mode
3. Manual reset
4. Service mode for demand forcing (password protected)

Change humidity and temperature setpoints, deadbands and differentials (password protected)

5.Sensor calibration (password protected)

Unit Mounted Sensors:

1. Air Proving Switch
2. Supply Fan Outlet High Static Limit Switch
3. Air Filter Dirty Switch
4. Entering Air temperature/RH sensor
5. DX Leaving Air Temperature Sensor
6. Shipped loose Supply Air Temperature Sensor

2.15 REMOTE OUTDOOR AIR-COOLED CONDENSER

2.15.1 UNIT CASING: Direct Coil Air cooled condensers are fabricated with 16-gauge Galvanized Steel with structural members made of 14 or 12 gauges as required for maximum support. The mounting design is easy to ship, fast for rigging and installation.

2.15.2 FAN MOTOR ASSEMBLY: All fans operate in fully baffled sections to provide efficient heat transfer and prevent wind milling. The condenser unit is provided with 2 fans, each consisting of an 800 mm diameter 3.1KW ZIEHL-ABEGG High Efficiency EC Fan motor or equal. Fans are provided with sickle blades for quiet operation and the normal speed motor enables the fan to produce sound pressure levels of 61 dBA at 10m. Fans are speed controlled in response to load demands by a pressure sensing transducer. Motors have Thermal Overload Protector, moisture, and hot climate protection. Motors are rated for 208/3/60 Main Power.

2.15.3 CONDENSER COIL: High heat transfer Copper - 0.014 Plain Tube & Aluminum 0.010 Corrugated Fin coils of generous face area with tubes mechanically expanded into self-spacing fin collars for maximum heat transfer. All coils have a maximum operating pressure of 600 psig. Coils are factory leak tested at 600 psig with dry air and sealed prior to shipment. Copper headers are used for inlet and outlet with Sweat – Copper connections for field connections.

2.16 Paint and Finish: Prior to painting, all metal part shall be pretreated to remove oils and dirt and rinsed with an ionized solution. Painting shall be by a powder coat technique to assure positive adherence with a high-impact finish. All sides of panels shall be painted after manufacturing. The paint shall be high yield polyester. The paint shall be rated to a minimum of 1000 hour salt spray test (ASTM B117), have a minimum Direct Impact Resistance of 160 in-lbs (ASTM D2794), have a minimum flexibility of ¼" Mandrel (ASTM D522, Method B) and a minimum 1000 hour Humidity Resistance (ASTM D2247).

2.17 Basic Vibration Isolation: Provide vibration isolation products complying with Division-23 section "Vibration Isolation" and the following list:

2.17.1 Equipment Mounting: Type EM1

2.18 Warranty: Manufacturer shall provide one year parts and labor warranty.

2.19 Shop Drawings: Provide scaled factory approved refrigerant line layout showing the actual routing on site, including all elevation changes and elbows. Drawings should indicate total length and size of refrigerant piping between indoor and outdoor units and elevations for indoor and outdoor equipment.

3 EXECUTION

3.1 Installation: Install in accordance with producer's printed instructions. Brush out fins on all coils.

3.2 Mount units on vibration isolation and concrete housekeeping pads.

3.3 Refrigerant Piping: Comply with ANSI B31.5, “Refrigerant Piping,” (except lower pressure limits below 15 psig), and ASHRAE 15 (ANSI B9.1). Make all joints carefully and neatly. Clean pipe and fittings before fluxing. Remove burrs. Braze by the sweat method using Sil Fos. Install field installed refrigerant devices and valves as required.

3.3.1 Refrigerant Piping Layout: Any deviations from the factory approved shop drawings shall be approved by the factory prior to system startup.

3.4 Testing: After job erection, or modification of factory installed piping, pressure test for leaks at 150 psig using a nominal amount of a suitable tracer refrigerant and dry nitrogen or a suitable refrigerant. Perform leak tests with an electronic halide leak detector having a sensitivity of at least ½ ounce R-12 per year. Refrigeration piping will not be accepted unless it is gas tight.

3.5 Evacuation: After completing the successful pressure test, multiple-evacuate the system. Leave the compressor isolation valves shut and connect the vacuum pump to both the high and low sides. Evacuate the system to an absolute pressure of 1,500 microns. Then break vacuum to 2 psig with dry nitrogen. Repeat this process. Install the proper biflow drier in the liquid line and evacuate the system to 500 microns. Leave vacuum pump running for at least two hours without interruption. Break vacuum with the refrigerant to be used and raise pressure to 2 psig. Do not operate compressors during the evacuation procedure.

3.6 Charging: After completing the successful evacuation procedure, charge refrigerant directly to the system from the original containers through a filter drier. Charge to the manufacturer’s stated conditions of pressure for required temperature. Weigh the refrigerant added and record on the startup report.

3.7 Controls: Set up controls for units as described in Sequence of Operations.

3.8 Cleaning: Clean tar and all other soil from housing exterior. Leave ready for Division 7, Caulking Work. Caulk around pipe sleeves.

3.9 Construction Filters: Provide 4" thick filters in all units during construction. After

construction (but prior to the test and balance being performed) install clean final filters.

3.10 Condensate Drain: Pipe trapped copper condensate drain (full size of unit outlet) to nearest floor drain or as shown on the drawings. Refer to Division-23 section "Insulation" for pipe insulation.

3.11 Startup: Startup by a factory-trained representative. Check entire assembly for correctness of installation, alignment, and control sequencing. Start all component parts in proper sequence. Make all adjustments required to insure proper control and smooth quiet operation. Submit Startup Report.

END OF SECTION 23 81 03

SECTION 23 81 28 - DUCTLESS SPLIT SYSTEM AIR CONDITIONING UNITS

1 GENERAL

1.1 Drawings and general provisions of Contract, including General and Supplementary Conditions and Division-1 Specification sections, apply to work of this section.

1.2 Division-23 Basic Mechanical Materials and Methods sections apply to work of this section.

1.3 Refer to other Division-23 sections for testing, adjusting, and balancing of units; not work of this section.

1.4 Approval Submittals:

1.4.1 Product Data: Submit manufacturer's technical product data, including dimensions, ratings, electrical characteristics, weight, capacities, materials of construction, and installation instructions. Submit assembly-type drawings showing all piping and electrical connections and all mounting requirements. Show methods of fastening and assembly of components. Provide wiring diagrams.

1.5 O&M Data Submittals: Submit manufacturer's maintenance data including parts lists. Include these data, product data, and a copy of approval submittals in O&M manual.

2 PRODUCTS

2.1 Quality Assurance:

2.1.1 Test and rate split system air conditioning units in accordance with ARI Standard 210, 240 or 360 as applicable, and provide certified rating seal.

2.1.2 Construct refrigeration system of split system air conditioning units in accordance with ASHRAE 15 (ANSI B 9.1) "Safety Code for Mechanical Refrigeration".

2.1.3 Provide split system air conditioning units with an SEER that meets the Florida Energy Efficiency Code and the schedule on the drawings.

2.1.4 Provide split system air conditioning units that are designed, manufactured, and tested in accordance with UL or ETL requirements.

2.1.5 Acceptable Manufacturers: Submit to compliance with requirements, provide units by Sanyo, Toshiba, Mitsubishi, or approved equal.

2.2 General:

2.2.1 Casings: Construct of painted mill galvanized steel (or aluminum) formed panels rigidly reinforced and braced. Each unit shall be provided with removable panels to permit the unit (including fans and compressors) to be properly maintained and serviced.

2.3 Condensing Unit:

2.3.1 Condenser Fans and Drives: Fan shall be of rustproof construction, hot dipped galvanized steel, stainless steel or aluminum. Unit shall have weather protected totally enclosed motor. Provide a close fretwork galvanized steel or non-ferrous fan guard. Motors shall be

the permanently lubricated type, resiliently mounted.

2.3.2 Condenser Coil: Construct of non-ferrous tubes and aluminum fins. Provide inlet guard to protect condenser fins.

2.3.3 Compressor: Shall be scroll or hermetic design with vibration isolation. Compressor shall not produce objectionable noise or vibration inside the building. Compressors shall have five (5) year warranty.

2.3.4 Service Valves: Provide for high and low pressure readings.

2.4 Evaporator Unit:

2.4.1 Interior of unit shall be thermally and acoustically insulated with 1 inch fiberglass duct liner insulation. Provide removable panels to permit the unit to be properly serviced and maintained.

2.4.2 The evaporator section shall include centrifugal fan, two-speed fan motor, and direct drive. Provide cooling coil, snap out washable filters, refrigerant drier, controls and other necessary devices for a completely automatic unit. Coils shall have copper tubes and aluminum fins. Provide automatic oscillating louver action to facilitate air distribution.

2.5 Controls:

2.5.1 All safety and operational controls shall be factory wired.

2.5.2 Provide remote microprocessor-based controls with room thermostat, timer and fan speed switch.

2.6 Refrigerant Piping:

2.6.1 Copper tubing 3/4" and smaller: Type ACR, soft annealed temper; cast copper-alloy fittings for flared copper tubes; flared joints.

2.6.2 Brazing material: Silver solder bearing at least 15% silver; Sil Fos.

3 EXECUTION

3.1 Installation: Install in accordance with producer's printed instructions.

3.2 Refrigerant Piping: Comply with ANSI B31.5, "Refrigerant Piping," (extend lower pressure limits below 15 psig), and ASHRAE 15 (ANSI B9.1). Make all joints carefully and neatly. Clean pipe and fittings before fluxing. Remove burrs. Braze by the sweat method using Sil Fos.

3.3 Testing: After job erection, pressure test for leaks at 150 psig using a nominal amount of a suitable tracer refrigerant and dry nitrogen or a suitable refrigerant. Perform leak tests with an electronic halide leak detector having a sensitivity of at least 1/2 ounce R-12 per year. Refrigeration piping will not be accepted unless it is gas tight.

3.4 Evacuation: After completing the successful pressure test, multiple-evacuate the system. Leave the compressor isolation valves shut and connect the vacuum pump to both the high

and low sides. Evacuate the system to an absolute pressure of 1,500 microns. Then break vacuum to 2 psig with dry nitrogen. Repeat this process. Install the proper biflow drier in the liquid line and evacuate the system to 500 microns. Leave vacuum pump running for at least two hours without interruption. Break vacuum with the refrigerant to be used and raise pressure to 2 psig. Do not operate compressors during the evacuation procedure.

3.5 Charging: After completing the successful evacuation procedure, charge refrigerant directly to the system from the original containers through a filter drier. Charge to the manufacturer's stated conditions of pressure for required temperature. Weigh the refrigerant added and record on the startup report.

3.6 Cleaning: Clean tar and all other soil from housing exterior. Leave ready for Division 7, Caulking Work. Caulk around pipe sleeves.

3.7 Condensate Drain: Pipe trapped copper condensate drain to outside the building or to a point of disposal as shown on the drawings. Pipe shall be full size of unit outlet. Refer to Division-23 section "Insulation" for pipe insulation.

3.8 Startup: Check entire assembly for correctness of installation, alignment, and control sequencing. Start all component parts in proper sequence. Make all adjustments required to insure proper smooth quiet operation.

END OF SECTION

THIS PAGE INTENTIONALLY LEFT BLANK

SECTION 23 81 30 VARIABLE REFRIGERANT VOLUME HEAT PUMP SYSTEMS

PART 1 - GENERAL

1.1 SUMMARY

A. Section includes complete VRF HVAC system(s) which may include, but not limited to, the following components:

1. Indoor, multi position air handling units
2. Outdoor, air-source heat recovery units.
3. VRF system controls.
4. VRF system refrigerant and oil.
5. VRF system condensate drain piping.
6. VRF system refrigerant piping.
7. VRF system control cable.

1.2 QUALITY ASSURANCE

A. Manufacturer Qualifications:

1. Nationally recognized manufacturer of VRF HVAC systems and products.
2. Shipped VRF HVAC systems with similar requirements to local market for a continuous period of 10 years within time of bid.
3. VRF HVAC systems and products that have been successfully tested and in use on at least five completed projects.
4. Having complete published online catalog literature, installation, and operation and maintenance manuals for all products intended for use. Resources must be publicly available without login or sign-in as registered account.
5. Having full-time in-house employees for the following:
   a. Product research and development.
   b. Product and application engineering.
   c. Product manufacturing, testing, and quality control.
   d. Technical support for system installation training, startup, commissioning, and troubleshooting of installations.
   e. Owner training.

B. Installer Qualifications: An entity that employs installers and supervisors who are trained and approved by VRF HVAC system manufacturer.

1. Each employee shall be certified to have successfully completed manufacturer training for proper installation of systems, including, but not limited to, equipment, piping, controls, and accessories indicated and furnished for installation.
2. Installer certificate shall be valid and current for duration of Project.
3. Retain copies of Installer certificates on-site and make available on request.
4. Each person assigned to Project shall have demonstrated past experience.
   a. Demonstrated past experience with VRF products being installed for period within five consecutive years before time of bid.
   b. Demonstrated past experience on five projects of similar VRF system complexity, scope, and value.

C. ISO Compliance: System equipment and components furnished by VRF HVAC system

manufacturer shall be manufactured in an ISO 9001 and ISO 14001 facility.

1.3 DELIVERY, STORAGE, AND HANDLING

A. Deliver and store products in a clean and dry place. Protect products from weather, dirt, dust, water, construction debris, and physical damage.

1. Retain factory-applied coverings on equipment to protect finishes during construction and remove just prior to operating unit.

B. Cover unit openings before installation to prevent dirt and dust from entering inside of units. If required to remover coverings during unit installation, reapply coverings over openings after unit installation and remove just prior to operating unit.

C. Comply with manufacturer's written rigging and installation instructions for unloading and moving to final installed location.

1.4 WARRANTY

A. Manufacturer's Warranty: Manufacturer agrees to repair or replace equipment and components that fail(s) in materials or workmanship within specified warranty period.

1. Failures include, but are not limited to, the following:
   a. Structural failures.
   b. Faulty operation.
   c. Deterioration of metals, metal finishes, and other materials beyond normal weathering and use.
2. Warranty Period:
   a. For Compressor,10 year(s) from date of Substantial Completion.
   b. For Parts,10 year(s) from date of Substantial Completion.

B. Installer’s Labor Warranty: Installer agrees to repair or replace equipment and components that fail(s) in materials or workmanship within specified warranty period.

1. Warranty Period 2year(s) from date of substantial completion.

PART 2 - PRODUCTS

2.1 VRF HVAC SYSTEMS

A. Manufacturers: Basis of design is CITY MULTI. Subject to compliance with requirements, provide products by one of the following brands only:

1. Mitsubishi Electric & Electronics USA, Inc.
2. Trane, Inc.
3. Toshiba Carrier Co., Ltd.
4. Daikin Applied
5. Johnson Controls, Inc.

2.2 SYSTEM DESCRIPTION

A. VRF HVAC system(s) with variable capacity in response to varying cooling and heating loads. System shall consist of multiple indoor units, outdoor units with heat recovery, piping, controls, and electrical power to make complete operating system(s) complying with requirements indicated.

1. System(s) operation being heat pump or heat recovery as indicated on Drawings.
2. Each system with one refrigerant circuit serving all indoor units connected to system.

B. Electrical Components, Devices, and Accessories: Listed and labeled as defined in NFPA

70, by a qualified testing agency, and marked for intended location and application.

C. AHRI Compliance: System and equipment performance certified according to AHRI 1230-2023.

D. UL Compliance: Comply with UL 60335-2-40.

2.3 VERTICAL/HORIZONTAL DUCTED (MULTI-POSITION AIR HANDLER)

A. Description: The multi-position indoor unit shall be factory assembled, wired and run tested. Contained within the unit shall be all factory wiring, piping, electronic modulating linear expansion device, control circuit board and fan motor. The unit shall have a self-diagnostic function, 3-minute time delay mechanism, and an auto restart function. Indoor unit and refrigerant pipes shall be charged with dehydrated air before shipment from the factory. The unit shall be suitable for use in air handling spaces in accordance with Section 18.2 of UL 1995 4th Edition, be tested in accordance with ANSI/ASHRAE 193 and have less than 2% air leakage at maximum airflow setting.

B. Cabinet:

1. Material: Painted steel.
2. Insulation: Manufacturer's standard internal insulation to provide thermal resistance and prevent condensation.
3. Duct Connections: Extended collar or flange, or designated exterior cabinet surface, designed for attaching field-installed ductwork.
4. Internal Access: Removable panels or hinged doors of adequate size for field access to internal components for inspection, cleaning, service, and replacement.
5. The cabinet shall include a fixed bottom return, a fixed vertical discharge supply, and be prepainted, preinsulated 22 gauge galvanized steel.
6. Unit shall have R-4.2 insulation.

C. Coil Assembly:

1. The indoor coil shall be of nonferrous construction with smooth plate fins on copper tubing. The tubing shall have inner grooves for high efficiency heat exchange. All tube joints shall be brazed with phos-copper or silver alloy.
2. Testing: Factory pressure tested and verified to be without leaks.

D. Fan and Motor Assembly:

1. The indoor unit fan shall be an assembly with a single, statically and dynamically balanced direct drive fan with a high efficiency DC motor with permanently lubricated bearings.
2. The fan shall have 3-speeds with the capability to operate between 0.3-0.8 In.WG selectable.

E. Filter Assembly:

1. The unit shall have a 1” filter rack with a reusable filter.

F. Unit Controls:

1. Control board shall include contacts for control of no less than two stages of external heat. The first stage of external heat may be energized when the space temperature is 2.7°F from set point for between 10-25 minutes (user adjustable). The second stage of external heat may be energized when the first stage has been active for no less than 5 minutes and the space temperature has not risen by more than 0.9°F.

2. Indoor unit shall include no less than four (4) digital inputs capable of being used for customizable control strategies.
3. Indoor unit shall include no less than three (3) digital outputs capable of being used for customizable control strategies.

G. Unit Electrical:

1. Field Connection: Single point connection to power unit and integral controls.
2. Disconnecting Means: Field-installed circuit breaker or switch.

2.4 OUTDOOR, AIR-SOURCE HEAT RECOVERY UNITS

A. Description: Factory-assembled and tested complete unit designed for use in systems with simultaneous heating and cooling.

1. Systems shall consist of one unit, or multiple unit modules that are designed by variable refrigerant system manufacturer for field interconnection to make a single refrigeration circuit, heat recovery control unit(s), and multiple indoor units.

B. Cabinet:

1. Galvanized steel and coated with a corrosion-resistant finish.
   a. Coating with documented salt spray test performance of 1000 hours according to ASTM B117 surface scratch test (SST) procedure.
2. Internal Access: Removable panels or hinged doors of adequate size for field access to internal components for inspection, cleaning, service, and replacement.

C. Compressor and Motor Assembly:

1. One or more positive-displacement, direct-drive and hermetically sealed scroll compressor(s) with inverter drive. Non-inverter compressors—where LRA applies—are not allowed.
2. Protection: Integral protection against the following-
   a. Refrigerant overcharge and undercharge
   b. High and low refrigerant pressure.
   c. High refrigerant and oil temperature.
   d. Liquid flood back.
   e. Thermal and overload.
   f. Voltage fluctuations.
   g. Phase failure and phase reversal.
   h. Short cycling.
3. Speed Control: Configurable to maintain refrigerant evaporating and condensing temperatures while varying refrigerant flow to satisfy cooling and heating loads.
   a. Cooling mode fixed 32°F evaporator temperature.
   b. Cooling mode fixed 43°F evaporator temperature.
   c. Cooling mode variable 32-48°F evaporator temperature.
   d. Heating mode high COP operation.
   e. Heating mode high heating output operation.
4. Vibration Control: Integral isolation to dampen vibration transmission.
5. Oil Management: Timed sequence enabled during extended periods of reduced refrigerant flow to ensure proper lubrication over entire operating range. Sequences which rely on sensing oil level risk sensor failure or sensor placement not accounting for line length and are not allowed.
6. Crankcase heaters with integral control to maintain safe operating temperature.
7. Fusible plug.

D. Heat-Exchanger Assembly: Documented salt spray test performance of 1000 hours according to ASTM B117 surface test (SST) procedure.

1. Plate Fin Coils:
   a. Casing: Aluminum, galvanized, or stainless steel.
   b. Fins: Aluminum or copper, mechanically bonded to tubes, with arrangement required by performance.
   c. Tubes: Copper, of diameter and thickness required by performance.
2. Zinc-Coated Aluminum Microchannel Coils:
   a. Series of flat tubes containing a series of multiple, parallel flow microchannels layered between refrigerant header manifolds.
   b. Construct fins, tubes, and header manifolds of aluminum alloy.
   c. Provide coil panel heaters for heating operation below 0°F per Drawings.

E. Heat-Exchanger Defrost Strategy:

1. Alternate methods based on ambient temperatures.
   a. Hot-gas method to maximize efficiency during mild ambient temperatures. Method prolongs defrost sequence.
      1) Segmented coil (single-module systems) or alternating modules (twinned systems) to deliver simultaneous defrost and HEAT delivery indoors.
   b. Reverse-cycle method to maximize comfort during extreme ambient temperatures. Method shortens defrost sequence.
      1) Leverage below 33.8°F for single-module systems and below 23°F for twinned systems to deliver shorter defrost cycles.
2. Preheat Defrost Operation: Signal to indoor units operating in HEAT to increase space temperature before the start of defrost sequence.

F. Heat-Exchanger Fan and Motor Assembly:

1. Fan(s): Propeller type.
   a. Direct-drive arrangement.
   b. Fabricated from non-ferrous components.
   c. Statically and dynamically balanced.
2. Fan Guards: Removable safety guards complying with OSHA regulations. If using metal materials, coat with corrosion-resistant coating to match performance indicated for heat exchanger coil.
3. Motor(s): Brushless DC or electronically commutated with permanently lubricated bearings and rated for outdoor duty.
4. Motor Protection: Integral protection against thermal, overload, and voltage fluctuations.

G. Field-Installed Unit Accessories:

1. Low Ambient Cooling Kit: Provide heat-exchanger coil wind deflectors and fan hood assembly for low ambient cooling operation to -10°F.

2. Refrigerant Filter/Cleaning System: Replaceable filter core in bypass arrangement from main suction flow to enhance installation quality assurance.

H. Unit Controls:

1. Enclosure: Manufacturer's standard, and suitable for unprotected outdoor locations.
2. Factory-Installed Controller: Configurable digital control.
3. Factory-Installed Sensors:
   a. Refrigerant suction temperature.
   b. Refrigerant discharge temperature.

c. Outdoor air temperature.
d. Refrigerant high pressure.
e. Refrigerant low pressure.

4. Features and Functions: Self-diagnostics, time delay, auto-restart.
5. Interlock control sequence: Customizable operation based on external input or contact closure. Required interlock sequence(s) include-
   a. Compressor on/off and fault status.

I. Unit Electrical:

1. Field Connection: Single point connection to power each unit module and integral controls.
2. Disconnecting Means: Field-installed circuit breaker or switch, complying with NFPA 70.

2.5 VRF SYSTEM CONTROLS

A. General Requirements:

1. Network: Indoor units and outdoor units shall include integral controls and connect through a manufacturer-selected control network.
2. Network Communication Protocol: Manufacturer proprietary control communication between interconnected units.
3. Integration with Building Automation System: ASHRAE 135, BACnet IP and certified by BACnet Testing Lab (BTL), including the following-
   a. Ethernet connection via RJ-45 connectors and port with transmission at [**100**]<**Insert value**> Mbps or higher.
   b. Integration shall include [**control**][**monitoring**][**scheduling**][**change of value notifications**]<**Insert requirements**>.
   c. <**Insert requirements**>.
4. Operator Interface:
   a. Operators shall interface with system and unit controls through the following:
      1) Operator interfaces integral to controllers
      2) Integration with Building Automation System.
   b. Users shall be capable of interface with controllers for indoor units' control to extent privileges are enabled. Control features available to users shall include the following:
      1) On/off control.
      2) Temperature set-point adjustment.
      3) Fan speed control.
   c. Interface via secure-cloud access shall allow downloading of system diagnostic information, viewable system diagnostic charts, and email notification of error codes.

B. VRF HVAC System Operator Interface via PC:

1. Central controller(s) connected local-area-network shall be accessible through standard web browser software requiring no manufacturer-specific software be installed on owner-furnished PC.
2. Browser interface shall provide operator with a graphic user interface to allow monitoring and control of multiple central controllers from a single device location through point-and-click mouse exchange.
3. Plan views shall show building plans with location of indoor units and identification superimposed on plans.
4. Controls operation mode of indoor units as individual units, by selected groups of indoor units, or as collection of all indoor units. Operation modes available through

central controller shall match those operation modes of controllers for indoor units.

5. Schedules operation of indoor units as individual units, by selected groups of indoor units, or as collection of all indoor units. Schedules daily, weekly, and annual events.
6. Changes operating set points of indoor units as individual units, by selected groups of indoor units, or as collection of all indoor units.
7. Night setback feature to operate indoor units at energy-conserving heating and cooling temperature set-points during unoccupied periods.
8. Supports Multiple Languages: English, French, or Spanish.
9. Supports Imperial and Metric Temperature Units
10. Displays service notifications and error codes.
11. Monitors and displays cumulative operating time of indoor units.
12. Able to disable and enable operation of individual controllers for indoor units.
13. Information displayed on individual controllers shall also be available for display.

C. Central Controllers:

1. Centralized control for all indoor and outdoor units from a single central controller location.
   a. Include multiple interconnected controllers as required.
   b. Include backlit, high-resolution color display touch panel.
2. Controls operation mode of indoor units as individual units, by selected groups of indoor units, or as collection of all indoor units. Operation modes available through central controller shall match those operation modes of controllers for indoor units.
3. Schedule operation of indoor units as individual units, by selected groups of indoor units, or as collection of all indoor units.
   a. Sets schedule for daily, weekly, and annual events.
   b. Schedule options available through central controller shall at least include the schedule options of controllers for indoor units.
4. Changes operating set points of indoor units as individual units, by selected groups of indoor units, or as collection of all indoor units.
5. Optimized start feature to start indoor units before scheduled time to reach temperature set-point at scheduled time based on operating history.
6. Night setback feature to operate indoor units at energy-conserving heating and cooling temperature set-points during unoccupied periods.
7. Able to disable and enable operation of individual controllers for indoor units.
8. Information displayed on individual controllers shall also be available for display through central controller.
9. Multiple RJ-45 ports for direct connection to a local PC and an Ethernet network switch.
10. Start/stop control capability for third-party equipment as required.
11. Niagara Driver for direct BMS connection to central controller(s) for enhanced data set including indoor unit and control points plus outdoor unit monitor points in lieu of BACnet license.

D. Wired Controllers and Sensors for Indoor Units

1. Deluxe Controllers for Indoor Units:
   a. Single controller capable of controlling multiple indoor units as group.
   b. Integral room temperature sensor
   c. Configurable LCD Touch Screen with Auto Timeout: Timeout duration shall be adjustable.
   d. Temperature Units: Fahrenheit and Celsius.
   e. On/Off: Turns indoor unit on or off.

f. Hold: Hold operation settings until hold is released.
g. Operation Mode: Cool, Heat, Auto, Dehumidification, Fan Only, and Setback.
h. Temperature Display and Set-Point: Separate set points for Cooling, Heating. Adjustable in 1-degree Fahrenheit increments between.
i. Fan Speed Setting: Select between available options furnished with unit.
j. Airflow Direction Setting: If applicable to indoor unit style, select between available options furnished with the unit.
k. Seven-day programmable operating schedule with up to five events per day. Operations shall include On/Off, Operation Mode, and Temperature Set-Point.
l. Auto Off Timer: Operates unit for an adjustable time duration and then turns unit off.
m. Service Notification Display: "Filter".
n. Service Run Tests: Limit use by service personnel to troubleshoot operation.
o. Error Code Notification Display: Used by service personnel to troubleshoot abnormal operation and equipment failure.
p. User and Service Passwords: Capable of preventing adjustments by unauthorized users.
q. Setting stored in nonvolatile memory to ensure that settings are not lost if power is lost.
r. Low-voltage power required for controller shall be powered through non-polar connections to indoor unit.

2.6 VRF SYSTEM REFRIGERANT AND OIL

A. Refrigerant:

1. As required by VRF HVAC system manufacturer for system to comply with performance requirements indicated.
2. ASHRAE 34, Class A1 refrigerant classification.
3. R-410a.

B. Oil:

1. As required by VRF HVAC system manufacturer and to comply with performance requirements indicated.

2.7 VRF SYSTEM CONDENSATE DRAIN PIPING

A. If more than one material is listed, material selection is Contractor's option.

B. Copper Tubing:

1. Drawn-Temper Tubing: According to **ASTM B88, Type L**.
2. Wrought-Copper Fittings: ASME B16.22.
3. Wrought-Copper Unions: ASME B16.22.
4. Solder Filler Metals: ASTM B32, lead-free alloys, and water-flushable flux according to ASTM B813.

C. Reducers: Where applied to piping connected to unit-mounted integral lifting mechanism, only eccentric reducers oriented horizontally are allowed.

2.8 VRF SYSTEM REFRIGERANT PIPING

A. Refrigerant Piping:

1. Copper Tube: ASTM B280, Type ACR.
2. Wrought-Copper Fittings: ASME B16.22.
3. Brazing Filler Metals: AWS A5.8/A5.8M.

B. Refrigerant Tubing Kits:

1. Factory-rolled and -bundled, soft-copper tubing with tubing termination fittings at each end.
2. Standard one-piece length for connecting to indoor units.
3. Pre-insulated with flexible elastomeric insulation of thickness to comply with governing energy code and sufficient to eliminate condensation.
4. Factory Charge: dehydrated air or nitrogen.

C. Assemblies and Specialties:

1. Divided-Flow Specialty Fittings: Where required by VRF HVAC system manufacturer for proper system operation, VRF HVAC system manufacturer shall furnish specialty fittings with identification and instructions for proper installation by Installer.
2. Refrigerant Isolation Ball Valves: Uni-body full port design with Schrader valve for refrigerant service, rated for maximum system temperature and not less than 800 psig pressure, and factory tested under pressure to ensure tight shutoff.

2.9 VRF SYSTEM CONTROL CABLE

A. General Requirements: Refer to and verify all wire and cabling requirements with the manufacturer's current installation and operation manuals to ensure compliance with the latest standards and specifications. Cables may not be spliced and shall be continuous from terminal to terminal. Do not splice cable.

B. Low-Voltage Control Network Cabling:

1. Plenum-Rated, Paired Cable: NFPA 70, Type CMP.
   a. Shielded wire (2-core) 16 AWG—CVVS, CPEVS or MVVS.
   b. PVC insulation and jacket.
   c. Foil shielded.
   d. Flame Resistance: Comply with NFPA 262.
   e. Maximum cable distance (distance to farthest components) is **1,640 feet**.
   f. Maximum cable distance from OU to connected IU is **656 feet**.
   g. Maximum total cable length (sum of all network cabling) is **6,560 feet**.

C. Low-Voltage Wall-Mounted Controller Cabling to Indoor Units:

1. Plenum-Rated, Paired Cable: NFPA 70, Type CMP.
   a. 22 AWG, 2-conductor unshielded 7-stranded bare copper wire.
      1) Residential / multi-family style controllers require 4-conductor.
      2) Touch controllers with integral occupancy and light sensing controllers require low-voltage control network cabling to the network.
   b. PVC insulation and jacket.
   c. Flame Resistance: Comply with NFPA 262.
   d. Maximum cable distance (distance from controller to indoor unit) varies by controller style. Refer to manufacturer Submittal or Installation Guides.

D. Transmission power booster provided if additional signal power is required based on connected devices. Coordinate with VRF manufacturer and install near middle of communication bus when required.

PART 3 - EXECUTION

3.1 EXAMINATION

A. Examine substrates, areas, and conditions, with Installer present, for compliance with requirements for installation tolerances and other conditions affecting performance of the

Work.

B. Examine products before installation. Reject products that are wet, moisture damaged, or mold damaged.

C. Examine roughing-in for piping and tubing to verify actual locations of connections before equipment installation.

D. Examine roughing-in for ductwork to verify actual locations of connections before equipment installation.

E. Examine roughing-in for wiring and conduit to verify actual locations of connections before equipment installation.

F. Examine walls, floors, roofs, and outdoor pads for suitable conditions where equipment will be installed.

G. Prepare written report, endorsed by Installer, listing conditions detrimental to performance of the Work.

H. Proceed with installation only after unsatisfactory conditions have been corrected.

3.2 EQUIPMENT INSTALLATION, GENERAL

A. Clearance:

1. Maintain manufacturer's recommended clearances for service and maintenance.
2. Maintain clearances required by governing code.

B. Equipment Restraint Installation: Install equipment with seismic-restraint device. Comply with requirements for seismic-restraint devices specified in Section 230548 "Vibration and Seismic Controls for HVAC."

3.3 INSTALLATION OF INDOOR UNITS

A. Install units to be level and plumb while providing a neat and finished appearance.

B. Unless otherwise required by VRF HVAC system manufacturer, support ceiling-mounted units from structure above using threaded rods; minimum rod size of **3/8 inch**

C. Adjust supports of exposed and recessed units to draw units tight to adjoining surfaces.

D. Protect finished surfaces of ceilings, floors, and walls that come in direct contact with units. Refinish or replaced damaged areas after units are installed.

E. In rooms with ceilings, conceal piping and tubing, controls, and electrical power serving units above ceilings.

F. In rooms without ceiling, arrange piping and tubing, controls, and electrical power serving units to provide a neat and finished appearance.

G. Provide lateral bracing if needed to limit movement of suspended units to not more than [**0.25 inch**

3.4 INSTALLATION OF OUTDOOR UNITS

A. Install units to be level and plumb while providing a neat and finished appearance.

B. Install outdoor units on support structures indicated on Drawings.

C. Pad-Mounted Installations: Install outdoor units on cast-in-place concrete equipment bases. Comply with requirements for equipment bases and foundations specified in Section 033000 "Cast-in-Place Concrete."

1. Attachment: Install anchor bolts to elevations required for proper attachment to supported equipment.
2. Grouting: Place grout under equipment supports and make bearing surface smooth.

3.5 GENERAL REQUIREMENTS FOR PIPING INSTALLATION

A. Drawing plans, schematics, and diagrams indicate general location and arrangement of piping and tubing systems. Install piping and tubing as indicated unless deviations to layout are approved on coordination drawings.

B. Install piping and tubing in concealed locations unless otherwise indicated and except in equipment rooms and service areas.

C. Install piping and tubing at right angles or parallel to building walls. Diagonal runs are prohibited unless specifically indicated otherwise.

D. Install piping and tubing above accessible ceilings to allow sufficient space for ceiling panel removal.

E. Install piping and tubing to permit valve servicing.

F. Install piping and tubing at indicated slopes.

G. Install piping and tubing free of sags.

H. Install fittings for changes in direction and branch connections.

I. Install piping and tubing to allow application of insulation.

J. Install groups of pipes and tubing parallel to each other, spaced to permit applying insulation with service access between insulated piping and tubing.

K. Install sleeves for piping and tubing penetrations of walls, ceilings, and floors. Comply with requirements for sleeves specified in Section 230500 "Common Work Results for HVAC."

L. Install escutcheons for piping and tubing penetrations of walls, ceilings, and floors. Comply with requirements for escutcheons specified in Section 230500 "Common Work Results for HVAC."

3.6 INSTALLATION OF SYSTEM CONDENSATE DRAIN PIPING

A. General Requirements for Drain Piping and Tubing:

1. Install a union in piping at each threaded unit connection.

B. Gravity Drains:

1. Slope piping from unit connection toward drain termination at a constant slope of not less than one percent.

3.7 INSTALLATION OF REFRIGERANT PIPING

A. Refrigerant Tubing Kits:

1. Unroll and straighten tubing to suit installation. Deviations in straightness of exposed tubing shall be unnoticeable to observer.
2. Support tubing as specified in Section 230516 “Hangers and Supports for HVAC Piping and Equipment.”
3. Prepare tubing ends and make mating connections to provide a pressure tight and leak-free installation.

B. Select system components with minimum **650 psig** pressure rating.

C. Install piping as short and direct as possible, with a minimum number of joints and fittings.

D. Arrange piping to allow inspection and service of equipment. Install valves and specialties in accessible locations to allow for service and inspection. Install access doors or panels as specified in Section 083113 "Access Doors and Frames" if valves or equipment requiring maintenance is concealed behind finished surfaces.

E. Install refrigerant piping and tubing in protective conduit where installed below ground.

F. Install refrigerant piping and tubing in rigid or flexible conduit in locations where exposed to mechanical damage.

G. Unless otherwise required by VRF HVAC system manufacturer, slope refrigerant piping and tubing as follows:

1. Install horizontal hot-gas discharge piping and tubing with a uniform slope downward away from compressor.
2. Install horizontal suction lines with a uniform slope downward to compressor.
3. Traps to entrain oil in vertical runs are not allowed.
4. Inverted traps for twinned systems may be required by manufacturer.
5. Liquid lines may be installed level.

H. When brazing, remove or protect components that could be damaged by heat. Braze pipes with a dry nitrogen purge to avoid oxidation.

I. Before installation, clean piping, tubing, and fittings to cleanliness level required by VRF HVAC system manufacturer.

J. Joint Construction:

1. Brazed Joints
   a. Ream ends of tubes and remove burrs.
   b. Remove scale, slag, dirt, and debris from inside and outside of tube and fittings before assembly.
   c. Construct joints in accordance with AWS's "Brazing Handbook," "Pipe and Tube" Chapter.
   d. Use Type BAg (cadmium-free silver) alloy for joining copper with bronze.
   e. The piping being brazed shall be purged of air to remove the oxygen and filled with one of the following inert gases: oxygen-free nitrogen, helium or argon.

The piping system shall be purged with an inert gas for a minimum time corresponding to five volume changes through the piping system prior to brazing. The pre-purge rate shall be at a minimum velocity of 100 feet per minute (0.508 m/s). The inert gas shall be directly connected to the tube system being brazed to prevent the entrainment of ambient air. After the pre-purge, the inert gas supply shall be maintained through the piping during the brazing operation at a minimum pressure of **1.0 psi** (**6.89 kPa**) and a maximum pressure of **3.0 psi** (**20.67 kPa**). The joint shall be brazed with a filler metal conforming to AWS A5.8

2. Flared Joints
   a. Flared fittings shall be installed in accordance with the manufacturer's instructions. The flared fitting shall be used with the tube material specified by the fitting manufacturer. The flared tube end shall be made by a tool designed for that operation.
3. Soldered Joints
   a. Use of soldered joints is prohibited within VRF systems.

3.8 INSTALLATION OF PIPING AND TUBING INSULATION

A. Seal longitudinal seams and end joints with manufacturer's recommended adhesive to eliminate openings in insulation that allow passage of air to surface being insulated. Installation to maintain a continuous vapor barrier.

B. Insulation Installation on Pipe Fittings and Elbows:

1. Install mitered sections of pipe insulation.
2. Secure insulation materials and seal seams with manufacturer's recommended adhesive to eliminate openings in insulation that allow passage of air to surface being insulated.

C. Insulation Installation on Valves and Pipe Specialties:

1. Install preformed valve covers manufactured of same material as pipe insulation when available.
2. When preformed valve covers are unavailable, install cut sections of pipe and sheet insulation to valve body. Arrange insulation to permit access to packing and to allow valve operation without disturbing insulation.
3. Secure insulation to valves and specialties and seal seams with manufacturer's recommended adhesive to eliminate openings in insulation that allow passage of air to surface being insulated.

D. Where PVC jackets are indicated, install with **1-inch (25-mm)** overlap at longitudinal seams and end joints, for horizontal applications. Seal with manufacturer's recommended adhesive.

1. Apply two continuous beads of adhesive to seams and joints, one bead under lap and the finish bead along seam and joint edge.

E. Where metal jackets are indicated, install with **2-inch (50-mm)** overlap at longitudinal seams and end joints. Overlap longitudinal seams arranged to shed water. Seal end joints with weatherproof sealant recommended by insulation manufacturer. Secure jacket with stainless steel bands **12 inches (300 mm)** o.c. and at end joints.

3.9 INSTALLATION OF DUCT AND ACCESSORIES

A. Where installing ductwork adjacent to equipment, allow space for service and maintenance.

B. Comply with requirements for metal ducts specified in other Division 23 sections.

C. Comply with requirements for air duct accessories specified in other Division 23 sections.

3.10 IDENTIFICATION

A. Identify system equipment, piping, tubing, and valves. Comply with requirements for identification specified in other Division 23 sections.

3.11 FIELD QUALITY CONTROL

A. Manufacturer's Field Service: Engage VRF HVAC system manufacturer's service representative to advise and assist installers; witness testing; and observe and inspect components, assemblies, and equipment installations, including controls and connections.

1. Field service shall be performed by a manufacturer-trained and authorized service representative of VRF HVAC system manufacturer whose primary job responsibilities are to provide direct technical support of its products.
2. Manufacturer-trained and authorized service representative shall provide on-site visits during construction at installation milestones indicated. System Installer shall coordinate each visit in advance to give manufacturer sufficient notice to plan the visit.
   a. First Visit: Kick-off meeting.
   b. Second Visit: At approximately [**25**] percent completion of system(s).
   c. Third Visit: At approximately [**50**] percent completion of system(s).
   d. Fourth Visit: At approximately [**75**] percent completion of system(s).
   e. Fifth Visit: Final inspection before system startup.
3. Kick-off Meeting:
   a. Meeting shall include system Installer and other related trades with sole purpose of reviewing VRF HVAC system installation requirements and close coordination required to make a successful installation.
   b. Meeting shall be held at Project site and scheduled at a mutually agreed to time that occurs before the start of any part of system installation.
   c. Meeting shall cover the following as a minimum requirement:
      1) Review of latest issue of Contract Documents, Drawings, and Specifications, relevant to VRF HVAC systems.
      2) Manufacturer's installation requirements specific to systems being installed.
      3) Review of all relevant VRF HVAC system submittals, including delegated-design submittals.
      4) Required field activities related installation of VRF HVAC system.
      5) Project team communication protocol, contact information, and exchange of responsibilities for each party involved, including manufacturer, supplier, system Installer, and other related trades.
4. Site Visits: Activities for each site visit shall include the following:
   a. Meet with VRF HVAC system Installer to discuss field activities, issues, and suggested methods to result in a successful installation.
   b. Offer technical support to Installer and related trades as related to VRF system(s) being installed.
   c. Review progress of VRF HVAC system(s) installation for strict compliance with manufacturer's requirements.
   d. Advise and if necessary, assist Installer with updating related refrigerant calculations and system documentation.
5. Final Inspection before Startup:
   a. Before inspection, Installer to provide written request to manufacturer stating the system is fully installed according to manufacturer's requirements and ready for final inspection.
   b. All system equipment and operating components shall be inspected. If

components are inaccessible for inspection, they shall be made accessible before the final inspection can be completed.

c. A factory-trained and authorized service representative shall provide a comprehensive inspection of all equipment and each operating component that comprise the complete system(s). Inspection shall follow a detailed checklist specific to each equipment and operating component.

d. Inspection reports for indoor units shall include, but not be limited to, the following:
   1) Unit designation on Drawings.
   2) Manufacturer model number.
   3) Serial number.
   4) Network address, if applicable.
   5) Each equipment setting.
   6) Mounting, supports, and restraints properly installed.
   7) Proper service clearance provided.
   8) Wiring and power connections correct.
   9) Line-voltage reading(s) within acceptable range.
   10) Wiring and controls connections correct.
   11) Low voltage reading(s) within an acceptable range.
   12) Controller type and model controlling unit.
   13) Controller location.
   14) Temperature settings and readings within an acceptable range.
   15) Condensate removal acceptable.
   16) Fan settings and readings within an acceptable range.
   17) Unit airflow direction within an acceptable range.
   18) If applicable, fan external static pressure setting.
   19) Filter type and condition acceptable.
   20) Noise level within an acceptable range.
   21) Refrigerant or hydronic piping properly connected and insulated.
   22) Condensate drain piping properly connected and insulated.
   23) If applicable, ductwork properly connected.
   24) If applicable, external interlocks properly connected.
   25) Remarks.

e. Inspection reports for outdoor units shall include, but not be limited to, the following:
   1) Unit designation on Drawings.
   2) Manufacturer model number.
   3) Serial number.
   4) Network address, if applicable.
   5) Each equipment setting, including compressor speed control.
   6) Mounting, supports, and restraints properly installed.
   7) Proper service clearance provided.
   8) Wiring and power connections correct.
   9) Line-voltage reading(s) within acceptable range.
   10) Wiring and controls connections correct.
   11) Low voltage reading(s) within an acceptable range.
   12) Condensate removal acceptable.
   13) Noise level within an acceptable range.
   14) Refrigerant piping properly connected and insulated.
   15) Condensate drain piping properly connected and insulated.
   16) For water-source outdoor units, water piping properly connected and insulated.
   17) For water-source outdoor units, proof of water flow checked for proper

operation.
18) Remarks.

f. Installer shall provide manufacturer with the requested documentation including as-built piping lengths and technical support during inspection.
g. Installer shall correct observed deficiencies found by the inspection.
h. Upon completing the on-site inspection, manufacturer shall provide a written report with complete documentation describing each inspection step, the result, and any corrective action required.
i. If corrective action is required by Installer that cannot be completed during the same visit, provide additional visits, as required, until deficiencies are resolved, and systems are deemed ready for startup.
j. Final report shall indicate the system(s) inspected are installed according to manufacturer's requirements and are ready for startup.

B. Perform the following tests and inspections with the assistance of manufacturer's service representative:

1. Perform each visual and mechanical inspection and electrical test stated in NETA Acceptance Testing Specification. Certify compliance with test parameters.
2. Leak Test: After installation, charge system and test for leaks. Repair leaks and retest until no leaks exist.
3. Operational Test: Not less than 24 hours after electrical circuitry has been energized, start units to confirm proper motor rotation and unit operation.
4. Test and adjust controls and safeties. Replace damaged and malfunctioning controls and equipment.

C. Refrigerant Tubing Positive Pressure Testing:

1. Comply with more stringent of VRF HVAC system manufacturer's requirements and requirements indicated.
2. After completion of tubing installation, pressurize tubing systems to a test pressure:
   a. Refrigerant piping to a test pressure of not less than **600 psig** using dry nitrogen.
   b. Hydronic piping to a test pressure of not less than **43 psig**.
3. Successful testing shall maintain a test pressure for a continuous and uninterrupted period of 24 hours. Allowance for pressure changes attributed to changes in ambient temperature are acceptable.
4. Prepare test report to record the following information for each test:
   a. Name of person starting test, company name, phone number, and e-mail address.
   b. Name of manufacturer's service representative witnessing test, company name, phone number, and e-mail address.
   c. Detailed description of extent of tubing tested.
   d. Date and time at start of test.
   e. Test pressure at start of test.
   f. Outdoor temperature at start of test.
   g. Name of person ending test, company name, phone number, and e-mail address.
   h. Date and time at end of test.
   i. Test pressure at end of test.
   j. Outdoor temperature at end of test.
   k. Remarks:
5. Submit test reports for Project record and to system manufacturer.

D. Refrigerant Tubing Evacuation Testing:

1. Comply with more stringent of VRF HVAC system manufacturer's requirements and requirements indicated.
2. After completion of tubing positive-pressure testing, evacuate tubing systems to a pressure of 500 microns.
3. Successful testing shall maintain a test pressure for a continuous and uninterrupted period of one hour with no change.
4. Prepare test report to record the following information for each test:
   a. Name of person starting test, company name, phone number, and e-mail address.
   b. Name of manufacturer's service representative witnessing test, company name, phone number, and e-mail address.
   c. Detailed description of extent of tubing tested.
   d. Date and time at start of test.
   e. Test pressure at start of test.
   f. Outdoor temperature at start of test.
   g. Name of person ending test, company name, phone number, and e-mail address.
   h. Date and time at end of test.
   i. Test pressure at end of test.
   j. Outdoor temperature at end of test.
   k. Remarks:
5. Submit test reports for Project record and to system manufacturer.
6. Upon successful completion of evacuation testing, system shall be charged with refrigerant.

E. System Refrigerant Charge:

1. System Installer shall consult system manufacturer to determine the correct system refrigerant charge based on as-built piping lengths.
2. Installer shall charge system following VRF HVAC system manufacturer's written instructions.
3. Total refrigerant charge shall be recorded and permanently displayed at the system's outdoor unit.

3.12 STARTUP SERVICE

A. Installer shall engage a factory-trained and authorized service representative of VRF HVAC system manufacturer to perform system(s) startup supervision.

1. Complete startup service of each separate system.
2. Complete system startup service according to manufacturer's written instructions.

B. Startup checks shall include, but not be limited to, the following:

1. Check control communications of equipment and each operating component in system(s).
2. Check each outdoor unit’s power supply is connected 12 to 24 hours before startup of system.
3. Check each indoor unit's response to demand for cooling and heating.
4. Check each indoor unit's response to changes in airflow settings.
5. Check each indoor unit and outdoor unit for proper condensate removal.

C. Installer shall accompany factory-trained and authorized service representative during startup service and provide manufacturer's service representative with requested documentation and technical support during startup service.

1. Installer shall correct deficiencies found during startup service for reverification.

D. System Operation Report:

1. After completion of startup service, manufacturer shall issue a report for each separate system.
2. Report shall include complete documentation describing each startup check, the result, and any corrective action required.
3. Manufacturer shall electronically record not less than one hour of continuous operation of each system and submit with report for historical reference.
   a. All available system operating parameters shall be included in the information submitted.

E. Witness:

1. Invite Architect, Owner, and, Commissioning Agent to witness startup service procedures.
2. Provide written notice not less than 20 business days before start of startup service.

3.13 ADJUSTING

A. Adjust equipment and components to function smoothly and lubricate as recommended by manufacturer.

B. Adjust initial temperature set points. Adjust initial airflow settings and discharge airflow patterns.

C. Set field-adjustable switches according to VRF HVAC system manufacturer's written instructions, and as indicated.

3.14 MAINTENANCE SERVICE

A. Initial Maintenance Service: Beginning at Substantial Completion, maintenance service shall include [12] months' full maintenance by skilled employees of system Installer who are manufacturer's authorized service representative]. Include four service visits for preventive maintenance, repair or replacement of worn or defective components, lubrication, cleaning, and adjusting as required for proper equipment and system operation. Parts and supplies shall be manufacturer's authorized replacement parts and supplies.

3.15 DEMONSTRATION

A. Engage a VRF HVAC system manufacturer's factory-authorized service representative to train Owner's maintenance personnel to adjust, operate, and maintain entire system.

B. Instructor:

1. Instructor shall be factory trained and certified by VRF HVAC system manufacturer with current training on the system(s), equipment, and controls that are installed.

C. Schedule:

1. Schedule training with Owner at least 10 business days before first training session.
2. Training shall occur before Owner occupancy.
3. Training shall be held at mutually agreed date and time during normal business hours.

D. Location: Owner shall provide a suitable on-site location to host classroom training.

E. Training Attendance: For record purposes, document training attendees at the start of each new training session. Record attendee's name, signature, phone number, and e-mail address.

F. Training Format: Individual training modules shall include classroom training followed by hands-on field demonstration and training.

G. Training Materials: Provide training materials in electronic format to each attendee.

1. Offer online instructional videos showing general operation and maintenance that are coordinated with operation and maintenance manuals.

H. Acceptance: Obtain Commissioning Agent, and Owner written acceptance that training is complete, and requirements indicated have been satisfied.

END OF SECTION 238130

THIS PAGE INTENTIONALLY LEFT BLANK

SECTION 260500 - ELECTRICAL GENERAL REQUIREMENTS

PART 1 - GENERAL

1.1 SUMMARY

The Electrical General Requirements are supplementing and applicable to Division 26 Sections and shall apply to all phases of work specified herein, shown on the Drawings, or required to provide a complete installation of electrical systems. Section 26 is sub-divided for convenience only.

A. This Section includes the following:

1. Job Conditions
2. Regulatory Requirements
3. Electrical equipment coordination and installation.
4. Submittals, Operating and Maintenance instructions and As-built drawings.
5. Common electrical installation requirements.
6. Warranty of work.

1.2 JOB CONDITIONS:

A. Site Inspections: Before submitting proposals, each bidder should visit the site and fully familiarize himself with all job conditions and shall be fully informed as to the extent of his work. No consideration will be given after bid opening date for alleged misunderstanding as to the requirements of work involved in connecting to the utilities or as to requirements of materials to be furnished. The contractor shall contact the utility prior to bid and make appropriate provisions in such bid as required by the utility for the utility's routing and connection.

B. Scheduled Interruptions: Planned interruptions of utilities service, to any facility affected by this contract, shall be carefully planned and approved by Architect at least ten (10) days in advance of the requested interruption. The Contractor shall not interrupt services until the Architect has granted specific approval. The request shall indicate services to be affected, date and time of interruption and duration of outage. Request for interruption of service will not be approved until all equipment and materials required for the completion of that particular phase of work are on the job site. The work may have to be scheduled after normal working hours.

C. Accidental Interruptions: All excavation and/or remodeling work required shall be performed with care so as not to interrupt other existing services (water, gas, electrical, sewer, sprinklers, etc.). If accidental utility interruption resulting from work performed by the Contractor occurs, service shall be immediately restored to its original condition without delay, by and at the expense of the Contractor, using skilled workmen of the trade required.

1.3 REGULATORY REQUIREMENTS:

A. Permits, Fees, and Inspections: This Contractor shall secure and pay for all permits, and inspections required on work performed under this section of the Specifications. He shall assume full responsibility for all assessments and taxes necessary for the completion and acceptance of the work.

B. Applicable Standards and Codes: The electrical installation shall comply with all applicable building codes; local, state, and federal ordinances. In case of a discrepancy among these applicable regulatory codes and ordinances, the most stringent requirement shall govern. The Contractor shall notify the Architect in writing of any such discrepancy. Should the Contractor perform any work that does not comply with the applicable regulatory codes and ordinances he shall bear all cost arising in

correcting the deficiencies. Application standards and codes shall include all local ordinances, all state laws, and the applicable requirements of the following:

1. American National Standards Institute - ANSI
2. National Electrical Manufacturer's Association - NEMA
3. National Fire Protection Association – NFPA (latest editions)
4. The National Electric Code – NEC – NFPA 70, 2020
5. The Life Safety Code – NFPA 101, 2021
6. The National Fire Alarm Code – NFPA 72, 2019
7. Florida Building Code, 2023 Edition
8. Underwriters' Laboratories, Inc. – UL

C. Drawings and Specifications: The drawings and these specifications are complementary each to the other. What is called for by one shall be as binding as if called for by both. Omissions from the drawings and specifications of details of work which are evidently necessary to carry out the intent of the drawings and specifications, or which are customarily performed, shall not relieve the Contractor from performing such work. In any case of discrepancy in the figures or catalog numbers, the matter shall be submitted to the Architect, who shall promptly make a determination in writing. Any adjustment by the Contractor shall be at the Contractor's own risk and expense. Electrical drawings are diagrammatic only. Do not scale these drawings. All equipment shall be installed in accordance with manufacturer's recommendations and any conflicting data shall be verified before bidding.

D. The Contractor shall after completion of the work, furnish the Architect a certificate of final inspection and approval from the applicable local inspection department. The Contractor shall also make necessary changes to plans and specifications to meet code standards at no additional cost to the Owner.

1.4 CONNECTION TO EXISTING UTILITIES:

A. All utility work shall be coordinated with and approved by the local providing utility. Permission for all utility outages shall be requested a minimum of (10) days in advance unless an emergency arises. Explicit detail shall be shown for all connections to existing utilities. The applicable utility company must approve both the location and the method of the proposed connection.

B. The contractor shall coordinate procedure to, and shall pay for, all electric energy consumption during construction as part of the project.

C. The contractor shall include the electric utility connection fee in the bid unless specifically directed by Owner not to do so. If, prior to bid, the electric utility connection fee is unknown, the Contractor shall include $25,000 as a line item in the bid for each service. Once the utility connection fee is known, if the utility connection fee is less than $25,000, the balance shall be removed from the Contractor's total contract price.

1.5 COOPERATION:

A. Interfacing with Other Crafts: It shall be the responsibility of the Contractor to cooperate and coordinate with all other crafts working on this project. This Contractor shall do all cutting, trenching, backfill and structural removals to permit entry of the electrical system components. The General Contractor shall do all patching and finishing.

B. Equipment Furnished Under Other Sections: This Contractor shall furnish and install, complete electrical roughing-in and connections to all equipment furnished under other sections and indicate on

drawings. This includes all outlets as shown on mechanical and electrical drawings. All such equipment shall be set in place as work of other sections.

C. Heating and Air Conditioning:

1. The Contractor shall furnish all branch circuit wiring to motors and control panels or centers including disconnects, receptacles, switches, and appurtenances to which the system at the units may be connected, to provide a complete system of wiring for power. Control equipment and control circuit wiring is specified in the Mechanical Section.

2. Control devices to be included in the branch circuit, except those furnished integrals with the equipment, will be delivered by the Heating and Air Conditioning Contractor and installed by the Electrical Contractor.

1.6 WORKMANSHIP:

All work shall be executed in a neat and substantial manner by skilled workman, well qualified, and regularly engaged in the type of work required. Substandard work shall be removed and replaced by the Contractor at no cost to the Owner.

1.7 APPROVAL OF MATERIALS AND EQUIPMENT:

Prior-Submittals: The Contractor shall base his proposal on the materials specified herein and on the drawings. Reference to a particular product by manufacturer, trade name, or catalog number establishes the quality standards of material and equipment required for this installation and is not intended to exclude products equal in quality and similar design. The Specifying Engineer reserves the sole right to decide the equality of materials proposed for use in lieu of these specified. It shall be the Contractor's responsibility to furnish the information and data sufficient to establish the quality and utility of the items in question, including furnishing of samples if required. If other equipment manufacturers determine that their equipment will fit in the space and meet the recommended clearances, suit all job conditions, equal or exceed the quality of the specified items, then a request may be made in writing to the Specifying Engineer at least ten (10) business days prior to bid date for permission to be included in the approved equipment list. All data required for evaluation shall accompany the above letter. The Specifying Engineer offers two submittal reviews, if these are unacceptable, only an “as-specified” submittal will be accepted. In addition, all value engineering alternates should only be submitted when directly requested by the owner and must be noted specifically as “VE” alternates to the items specified in the construction documents. A letter from the owner directing the VE effort is strongly encouraged as an accompaniment to any VE submittal.

A. Submittals:

1. Submittals: The Contractor shall submit a list of equipment proposed for installation. Catalog data and shop drawings on all proposed systems and their components shall be submitted. Where substitutions alter the design or space requirements, the Contractor shall defray all items of cost for the revised design and construction including costs to all allied trades involved. Provide six (6) copies of submittals and shop drawings as a minimum unless the General Conditions requires a greater number of copies. In lieu of paper copies, the Contractor may submit the submittals in PDF format.
   a. Submittals Schedule: Submittals shall be submitted within thirty (30) days after the contract is awarded. It is not the responsibility of the Engineer to expedite the review of submittals if the contractor has not adequately prepared the submittals in a time efficient manner. The contractor bears all the responsibility for the added time requirements of resubmittals.

b. Identification: Place a permanent label or title block on each submittal for identification. Each major section of submittals such as power equipment, lighting equipment, fire alarm, etc., shall be secured together in a booklet or stapled with a covering index. The different parts of the submittal shall describe which Specification Section it is referenced. The covering index shall list the following information:
   1) Project name and date
   2) Name, address, and phone number of General contractor and project manager.
   3) Name, address, and phone number of Sub-contractor and project manager.
   4) Supplier of equipment with phone number and person responsible for this project.
   5) Index of each item covered in submittal and model number.
   6) Any deviation from contract documents shall be specifically noted on submittal cover index and specifically identified with highlighting, encircling, or boldly on specific submittal sheet.

c. The submittal shall not be in individual parts per each Specification Section but be combined as a part of a major section such as power equipment, lighting equipment, fire alarm, methods, etc.

d. Resubmittals: The Specifying Engineer will participate in two resubmittal reviews. After the second resubmittal review, the Engineer shall not review the submittal until the Contractor provides $1,000 to the Engineer to perform each additional required resubmittal review. Make resubmittals in same form and number of copies as initial submittal.
   1) Include previous submittal review comments.
   2) For each item being resubmitted, include previous review comment and explain how resubmitted item meets the criteria of the previous review comment.

2. Electrical and Mechanical/Plumbing/Fire Protection Equipment Coordination:

   The electrical power equipment submittals shall be accompanied by a letter verifying coordination of electrical services for all mechanical, plumbing, and fire protection equipment requiring power. The letter shall follow the format listed below.

   To: _____
   (General Contractor)

   Re: _____
   (Project name and location)

   We the undersigned subcontractors certify that we have coordinated the electrical requirements for mechanical, plumbing, and fire protection sprinkler equipment as evidenced by the coordination chart listed herein.

Item	Load Full Load Amps	1 Phase or 3 Phase	Number of Electrical Connections	Maximum Overcurrent Protection	Minimum Overcurrent Protection	Breaker Proposed	Circuit Proposed

The above list details all required electrical connections for mechanical equipment.

Signed: _____

For: _____
Mechanical Subcontractor

The above list details all required electrical connections for plumbing equipment.

Signed: _____

For: _____
Plumbing Subcontractor

The above list details all required electrical and fire alarm connections for fire protection equipment.

Signed: _____

For: _____
Fire Protection Sprinkler Subcontractor

The above list of equipment has been reviewed and the required connections are being provided. (Any exceptions or request for direction shall be listed here)

Signed: _____

For: _____
Electrical Subcontractor

1.8 PRODUCT DELIVERY, STORAGE AND HANDLING

A. Protection: Take necessary precautions to protect all material, equipment, apparatus, and work from damage. Failure to do so to the satisfaction of the Architect will be sufficient cause for the rejection of the material, equipment, or work in question. Contractor is responsible for the safety and good condition of the materials installed until final acceptance by the owner.

B. Cleaning: Conduit openings shall be capped or plugged during installation. Fixtures and equipment shall be tightly covered and protected against dirt, moisture, chemical and mechanical injury. At the completion of the work the fixtures, material and equipment shall be thoroughly cleaned and delivered in condition satisfactory to the Architect.

1.9 TESTING AND BALANCING:

Make tests that may be required by the Owner or the Architect in connection with the operation of the electrical system in the buildings. Verify phase rotation of electrical system and that voltages are within acceptable limits. Balance all single-phase loads connected to all panelboards in the buildings to insure approximate equal divisions of these loads on the main secondary power supply serving the buildings. All tests shall be made in accordance with the latest standards of the IEEE and the NEC. The installation shall be tested as defined in the 26 specifications. Contractor shall perform circuit continuity and operational tests on all equipment furnished or connected by Contractor. The tests shall be made in the presence of the Architect or his representative. The Contractor shall notify the Architect at least twenty-four (24) hours in advance of tests. The Contractor shall provide all testing equipment and all costs shall be borne by him. Written reports shall be made of all tests and shall be made available at the Pre-Final Inspection. All faults shall be corrected immediately.

A. A letter shall be written giving the following:

1. Measured amps on each phase of each panel.
2. Resistance to ground of each new grounding electrode.
3. Measured voltage phase to phase and phase to neutral at each panel.
4. Ground continuity and polarity instrument used.

1.10 OPERATING AND MAINTENANCE INSTRUCTIONS/AS BUILT DRAWINGS:

A. Four (4) complete sets of instructions containing the manufacturer's Operating and Maintenance (O&M) instructions for each piece of equipment shall be furnished to the Owner. Each set shall be permanently bound and shall have a hard cover. One complete set shall be furnished at the time that the test procedure is submitted, and remaining sets shall be furnished before the Contract is completed. Flysheets shall be placed before instructions covering each subject. The instruction sheets shall be approximately 8-1/2" by 11" with large sheets of Drawings folded in. The instructions shall include information for major pieces of equipment and systems. In addition, a CD shall be provided to the Owner with the O&M Manuals and Drawings contained therein.

B. This Contractor shall provide as-built Drawings at the completion of the job. Drawings shall show all significant changes in equipment, wiring, routing, location, etc. All underground conduit routing shall be accurately indicated with locations dimensioned. As-built drawings shall be submitted for review as red-lined on a field hard copy (digitally edited PDF documents are also acceptable).

C. All signals, communications, data, control, dimming systems, etc. shall be included in the As-Built drawings. Where electrical drawings contain a large number of items that prevent easy discernment of the As-Built system, enlarged details or other graphic methods shall be used to clarify the identification required for As-Builts usage.

D. As-Built drawings shall include the following information:

1. Stub-out locations dimensioned from permanent building lines.
2. Routing of all main feeders and identified as under slab, in slab, above ceiling, etc. also for lighting and power branch circuits the number of conductors shall be included, and for feeders and motor branch circuits the number, size, and insulation of conductors shall be included.
3. Corrected panel board and equipment schedules.
4. Corrected circuit numbers as they appear on the panel board directories.
5. Corrected motor horsepower and full load amperes.
6. Location of major distribution open junction boxes with 2" conduit and over.
7. Location of all underground raceways or duct banks dimensioned from easily identified points with depth indicated from BFG (below finished grade) and by elevation in feet.

1.11 GUARANTEE AND SERVICE:

A. Upon completion of all tests and acceptance, the Contractor shall furnish the Owner a written guarantee covering the electrical work done for a period of one (1) year from date of acceptance. Guarantee includes equipment capacity and performance ratings specified without excessive noise levels. Upon notice from the Architect or the Owner, the Contractor shall, during the guarantee period, rectify and replace any defective material or workmanship and repair any damage caused thereby without additional cost.

PART 2 - EXECUTION

2.1 COMMON REQUIREMENTS FOR ELECTRICAL INSTALLATION

A. Comply with NECA 1-2015.

B. Measure indicated mounting heights to bottom of unit for suspended items and to center of unit for wall-mounting items.

C. Headroom Maintenance: If mounting heights or other location criteria are not indicated, arrange and install components and equipment to provide maximum possible headroom consistent with these requirements.

D. Equipment: Install to facilitate service, maintenance, and repair or replacement of components of both electrical equipment and other nearby installations. Connect in such a way as to facilitate future disconnecting with minimum interference with other items in the vicinity.

E. Right of Way: Give to raceways and piping systems installed at a required slope.

END OF SECTION 260500

THIS PAGE LEFT INTENTIONALLY BLANK

SECTION 260519 - LOW-VOLTAGE ELECTRICAL POWER CONDUCTORS AND CABLES

PART 1 - GENERAL

1.1 SUMMARY

A. Section Includes:

1. Copper building wire rated 600 V or less.
2. Aluminum building wire rated 600 V or less.
3. Metal-clad cable, Type MC, rated 600 V or less.
4. Fire-alarm wire and cable.
5. Connectors, splices, and terminations rated 600 V and less.

1.2 ACTION SUBMITTALS

A. Product Data: For each type of product.

B. Product Schedule: Indicate type, use, location, and termination locations.

1.3 INFORMATIONAL SUBMITTALS

A. Field quality-control reports.

PART 2 - PRODUCTS

2.1 COPPER BUILDING WIRE

A. Description: Flexible, insulated, and uninsulated, drawn copper current-carrying conductor with an overall insulation layer or jacket, or both, rated 600 V or less.

B. Manufacturers: Subject to compliance with requirements, provide products by one of the following:

1. Alpha Wire Company.
2. General Cable Technologies Corporation.
3. Okonite Company (The).
4. Southwire Company.

C. Standards:

1. Listed and labeled as defined in NFPA 70, by a qualified testing agency, and marked for intended location and use.
2. RoHS compliant.
3. Conductor and Cable Marking: Comply with wire and cable marking according to UL's "Wire and Cable Marking and Application Guide."

D. Conductors: Copper, complying with ASTM B3 for bare annealed copper and with ASTM B8 for stranded conductors.

1. Type NM: Comply with UL 83 and UL 719. (Romex – inside Dwelling Units Only)
2. Type RHH and Type RHW-2: Comply with UL 44.
3. Type USE-2 and Type SE: Comply with UL 854.
4. Type THHN and Type THWN-2: Comply with UL 83.
5. Type THW and Type THW-2: Comply with NEMA WC-70/ICEA S-95-658 and UL 83.
6. Type XHHW-2: Comply with UL 44.

2.2 ALUMINUM BUILDING WIRE

A. Description: Flexible, insulated and uninsulated, drawn aluminum current-carrying conductor with an overall insulation layer or jacket, or both, rated 600 V or less.

B. Allowed Use Locations: Aluminum conductors may only be used on feeder or distribution circuits larger than 100A. The Drawings typically indicate all conductor sizes in copper. The contractor shall provide a cross reference table for engineer approval prior to any conductor to be substituted with an aluminum conductor.

C. Manufacturers: Subject to compliance with requirements, provide products by one of the following:

1. Alpha Wire Company.
2. General Cable Technologies Corporation.
3. Okonite Company (The).
4. Southwire Company.

D. Standards:

1. Listed and labeled as defined in NFPA 70, by a qualified testing agency, and marked for intended location and use.
2. RoHS compliant.
3. Conductor and Cable Marking: Comply with wire and cable marking according to UL's "Wire and Cable Marking and Application Guide."

E. Conductors: Aluminum, complying with ASTM B800 and ASTM B801.

1. Type NM: Comply with UL 83 and UL 719. (Romex – inside Dwelling Units Only)
2. Type RHH and Type RHW-2: Comply with UL 44.
3. Type USE-2 and Type SE: Comply with UL 854.
4. Type THHN and Type THWN-2: Comply with UL 83.
5. Type THW and Type THW-2: Comply with NEMA WC-70/ICEA S-95-658 and UL 83.
6. Type XHHW-2: Comply with UL 44.

2.3 METAL-CLAD CABLE, TYPE MC

A. Description: A factory assembly of one or more current-carrying insulated conductors in an overall metallic sheath.

B. Allowed Use Locations: Metal-clad cable, Type MC shall only be used in walls from end of circuit devices (receptacles or switches) up to junction box above ceiling for homerun circuit or

light fixture. Homerun circuit shall not be in Type MC cable. Wiring between devices within walls are allowed to be in Type MC cable.

C. Manufacturers: Subject to compliance with requirements, provide products by one of the following:

1. General Cable Technologies Corporation.
2. Okonite Company (The).
3. Southwire Company.

D. Standards:

1. Listed and labeled as defined in NFPA 70, by a qualified testing agency, and marked for intended location and use.
2. Comply with UL 1569.
3. RoHS compliant.
4. Conductor and Cable Marking: Comply with wire and cable marking according to UL's "Wire and Cable Marking and Application Guide."

E. Circuits:

1. Single circuit.

F. Conductors: Copper, complying with ASTM B3 for bare annealed copper and with ASTM B8 for stranded conductors.

G. Ground Conductor: Insulated.

H. Conductor Insulation:

1. Type TFN/THHN/THWN-2: Comply with UL 83.
2. Type XHHW-2: Comply with UL 44.

I. Armor: Steel, interlocked.

J. Jacket: PVC applied over armor.

2.4 FIRE-ALARM WIRE AND CABLE

A. Manufacturers: Subject to compliance with requirements, provide products by one of the following:

1. General Cable Technologies Corporation.
2. Okonite Company (The).
3. Southwire Company.

B. General Wire and Cable Requirements: NRTL listed and labeled as complying with NFPA 70, Article 760.

C. Signaling Line Circuits: Twisted, shielded pair, not less than No. 16 AWG.

D. Non-Power-Limited Circuits: Solid-copper conductors with 600-V rated, 75 deg C, color-coded insulation, and complying with requirements in UL 2196 for a two-hour rating.

1. Low-Voltage Circuits: No. 16 AWG, minimum, in pathway.
2. Line-Voltage Circuits: No. 12 AWG, minimum, in pathway.

2.5 CONNECTORS AND SPLICES

A. Description: Factory-fabricated connectors, splices, and lugs of size, ampacity rating, material, type, and class for application and service indicated; listed and labeled as defined in NFPA 70, by a qualified testing agency, and marked for intended location and use.

B. Jacketed Cable Connectors: For steel and aluminum jacketed cables, zinc diecast with set screws, designed to connect conductors specified in this Section.

PART 3 - EXECUTION

3.1 CONDUCTOR MATERIAL APPLICATIONS

A. Feeders: Copper for feeders smaller than No. 3 AWG; copper or aluminum for feeders No. 3 AWG and larger. Conductors shall be solid for No. 10 AWG and smaller; stranded for No. 8 AWG and larger.

B. Branch Circuits: Copper. Solid for No. 10 AWG and smaller; stranded for No. 8 AWG and larger.

C. Power-Limited Fire Alarm and Control: Solid for No. 12 AWG and smaller.

3.2 CONDUCTOR INSULATION AND MULTICONDUCTOR CABLE APPLICATIONS AND WIRING METHODS

A. Service Entrance: Type THHN/THWN-2, single conductors in raceway.

B. Exposed Feeders: Type THHN/THWN-2, single conductors in raceway.

C. Feeders Concealed in Ceilings and Crawlspaces: Type THHN/THWN-2, single conductors in raceway.

D. Feeders Concealed in Walls and Partitions: Type THHN/THWN-2, single conductors in raceway.

E. Feeders Concealed in Concrete, below Slabs-on-Grade, and Underground: Type XHHW-2, single conductors in raceway.

F. Feeders in Cable Tray: Type THHN/THWN-2, single conductors in raceway or Type RHW-2/USE-2 if exterior located.

G. Exposed Branch Circuits, Including in Crawlspaces: Type XHHW-2, single conductors in raceway.

H. Dwelling Unit only - Branch Circuits Concealed in Ceilings, Walls, and Partitions: Nonmetallic-sheathed cable, Type NM

I. Branch Circuits Concealed in Ceilings, Walls, and Partitions: Type THHN/THWN-2, single conductors in raceway.

J. Branch Circuits Concealed in Concrete, below Slabs-on-Grade, and Underground: Type XHHW-2, single conductors in raceway.

3.3 INSTALLATION OF CONDUCTORS AND CABLES

A. Conceal cables in finished walls, ceilings, and floors unless otherwise indicated.

B. Complete raceway installation between conductor and cable termination points prior to pulling conductors and cables.

C. Use manufacturer-approved pulling compound or lubricant where necessary; compound used must not deteriorate conductor or insulation. Do not exceed manufacturer's recommended maximum pulling tensions and sidewall pressure values.

D. Use pulling means, including fish tape, cable, rope, and basket-weave wire/cable grips, that will not damage cables or raceway.

E. Install exposed cables parallel and perpendicular to surfaces of exposed structural members and follow surface contours where possible.

F. Support cables according as required by other Specification sections."

3.4 INSTALLATION OF FIRE-ALARM WIRING

A. Comply with NECA 1 and NFPA 72.

B. Wiring within Enclosures: Separate power-limited and non-power-limited conductors as recommended by manufacturer. Install conductors parallel with or at right angles to sides and back of the enclosure. Bundle, lace, and train conductors to terminal points with no excess. Connect conductors that are terminated, spliced, or interrupted in any enclosure associated with fire-alarm system to terminal blocks. Mark each terminal according to system's wiring diagrams. Make all connections with approved crimp-on terminal spade lugs, pressure-type terminal blocks, or plug connectors.

C. Cable Taps: Use numbered terminal strips in junction, pull, and outlet boxes, cabinets, or equipment enclosures where circuit connections are made.

D. Color-Coding: Color-code fire-alarm conductors differently from the normal building power wiring. Use one color-code for alarm circuit wiring and another for supervisory circuits. Color-code audible alarm-indicating circuits differently from alarm-initiating circuits. Use different colors for visible alarm-indicating devices. Paint fire-alarm system junction boxes and covers red.

E. Wiring to Remote Alarm Transmitting Device: 1-inch conduit between the fire-alarm control panel and the transmitter. Install number of conductors and electrical supervision for connecting wiring as needed to suit monitoring function.

3.5 CONNECTIONS

A. Tighten electrical connectors and terminals according to manufacturer's published torque-tightening values. If manufacturer's torque values are not indicated, use those specified in UL 486A-486B.

B. Make splices, terminations, and taps that are compatible with conductor material and that possess equivalent or better mechanical strength and insulation ratings than unspliced conductors.

1. Use oxide inhibitor in each splice, termination, and tap for aluminum conductors.

C. Wiring at Outlets: Install conductor at each outlet, with at least 12 inches of slack.

D. Prior to conduit/conductor routing to outlets, contractor shall request final verification of locations. Outlets shall be allowed to be moved 10 feet prior to installation with no cost change.

E. Comply with requirements in accompanying Section on Fire Alarm Systems for connecting, terminating, and identifying wires and cables.

3.6 IDENTIFICATION

A. Identify and color-code conductors and cables according to requirements in accompanying Sections in this book of Specifications.

B. Identify each spare conductor at each end with identity number and location of other end of conductor and identify as spare conductor.

3.7 SLEEVE AND SLEEVE-SEAL INSTALLATION FOR ELECTRICAL PENETRATIONS

A. Install sleeves and sleeve seals at penetrations of exterior floor and wall assemblies. Comply with requirements in accompanying Sections in this book of Specifications.

3.8 FIRESTOPPING

A. Apply firestopping to electrical penetrations of fire-rated floor and wall assemblies to restore original fire-resistance rating of assembly according to requirements in accompanying Sections in this book of Specifications.

END OF SECTION 260519

SECTION 260523 - CONTROL-VOLTAGE ELECTRICAL POWER CABLES

PART 1 - GENERAL

1.1 SUMMARY

A. Section Includes:

1. Balanced twisted pair cabling hardware.
2. RS-485 cabling.
3. Low-voltage control cabling.
4. Control-circuit conductors.

1.2 DEFINITIONS

A. Low Voltage: As defined in NFPA 70 for circuits and equipment operating at less than 50 V or for remote-control and signaling power-limited circuits.

1.3 ACTION SUBMITTALS

A. Product Data: For each type of product.

1.4 QUALITY ASSURANCE

PART 2 - PRODUCTS

2.1 PERFORMANCE REQUIREMENTS

A. Electrical Components, Devices, and Accessories: Listed and labeled as defined in NFPA 70, by a qualified testing agency, and marked for intended location and application.

B. Flame Travel and Smoke Density in Plenums: As determined by testing identical products according to NFPA 262, by a qualified testing agency. Identify products for installation in plenums with appropriate markings of applicable testing agency.

1. Flame Travel Distance: 60 inches or less.
2. Peak Optical Smoke Density: 0.5 or less.
3. Average Optical Smoke Density: 0.15 or less.

C. Flame Travel and Smoke Density for Riser Cables in Non-Plenum Building Spaces: As determined by testing identical products according to UL 1666.

D. Flame Travel and Smoke Density for Cables in Non-Riser Applications and Non-Plenum Building Spaces: As determined by testing identical products according to UL 1685.

E. RoHS compliant.

2.2 BALANCED TWISTED PAIR CABLE HARDWARE

A. Description: Hardware designed to connect, splice, and terminate balanced twisted pair copper communications cable.

B. Manufacturers: Subject to compliance with requirements, provide products by one of the following:

1. AMP NETCONNECT; a TE Connectivity Ltd. company.
2. Belden CDT Networking Division/NORDX.
3. General Cable; General Cable Corporation.
4. Hubbell Premise Wiring.
5. Siemon Co. (The).
6. Superior Essex Inc.

C. General Requirements for Balanced Twisted Pair Cable Hardware:

1. Comply with the performance requirements of Category 5e and/or Category 6 as applicable to product used.
2. Comply with TIA-568-C.2, IDC type, with modules designed for punch-down caps or tools.
3. Cables shall be terminated with connecting hardware of same category or higher.

D. Connecting Blocks: 110-style IDC for Category 5e or Category 6 as applicable Provide blocks for the number of cables terminated on the block, plus 20 percent spare, integral with connector bodies, including plugs and jacks where indicated.

E. Patch Panel: Modular panels housing numbered jack units with IDC-type connectors at each jack location for permanent termination of pair groups of installed cables.

1. Features:

a. Universal T568A and T568B wiring labels.
b. Labeling areas adjacent to conductors.
c. Replaceable connectors.
d. 12, 24 or 48 ports.

2. Construction: 16-gauge steel and mountable on 19-inch equipment racks or on wall-mountable independent of an equipment rack.

F. Patch Cords: Factory-made, four-pair cables in lengths necessary to connect equipment or as indicated on the Drawings; terminated with an eight-position modular plug at each end.

1. Patch cords shall have bend-relief-compliant and color-coded boots to ensure performance. Patch cords shall have latch guards to protect against snagging.

G. Plugs and Plug Assemblies:

1. Male; eight position; color-coded modular telecommunications connector designed for termination of a single four-pair 100-ohm unshielded or shielded balanced twisted pair cable.
2. Comply with IEC 60603-7-1, IEC 60603-7-2, IEC 60603-7-3, IEC 60603-7-4, and IEC 60603-7.5.
3. Marked to indicate transmission performance.

H. Jacks and Jack Assemblies:

1. Female; eight position; modular; fixed telecommunications connector designed for termination of a single four-pair 100-ohm unshielded or shielded balanced twisted pair cable.
2. Designed to snap-in to a patch panel or faceplate.
3. Standards.

    a. Category 5e, unshielded balanced twisted pair cable shall comply with IEC 60603-7-2.
    b. Category 5e, shielded balanced twisted pair cable shall comply with IEC 60603-7-3.
    c. Category 6, unshielded balanced twisted pair cable shall comply with IEC 60603-7-4.
    d. Category 6, shielded balanced twisted pair cable shall comply with IEC 60603-7.5.

4. Marked to indicate transmission performance.

I. Faceplate:

1. Port quantity as indicated on the Drawings; vertical single gang faceplates designed to mount to single gang wall boxes.
2. Plastic Faceplate: High-impact plastic. Coordinate color with Drawings and Architect
3. Metal Faceplate: Stainless steel, complying with requirements in "Wiring Devices."
4. For use with snap-in jacks accommodating any combination of balanced twisted pair, optical fiber, and coaxial work area cords.

    a. Flush mounting jacks, positioning the cord at a 45-degree angle.

J. Legend:

1. Machine printed, in the field, using adhesive-tape label.
2. Snap-in, clear-label covers and machine-printed paper inserts.

2.3 TWIN-AXIAL DATA HIGHWAY CABLE

A. Plenum-Rated Cable: NFPA 70, Type CMP.

1. Paired, One pair or as noted on Drawings, No. 18 AWG, stranded (7x32) tinned-copper conductors.
2. Plastic insulation.
3. Individual aluminum foil-polyester tape shielded pairs with 100 percent shield coverage.
4. Plastic jacket.
5. Pairs are cabled on common axis with No. 24 AWG, stranded (7x32) tinned-copper drain wire.
6. Flame Resistance: Comply with NFPA 262.

2.4 RS-232 CABLE

A. PVC-Jacketed, TIA 232-F:

1. Nine, No. 22 AWG, stranded (7x30) tinned copper conductors.
2. Polypropylene insulation.
3. Aluminum foil-polyester tape shield with 100 percent shield coverage.
4. PVC jacket.

5. Conductors are cabled on common axis with No. 24 AWG, stranded (7x32) tinned copper drain wire.
6. NFPA 70 Type: Type CM.
7. Flame Resistance: Comply with UL 1581.

B. Plenum-Type, TIA 232-F:

1. Nine, No. 22 AWG, stranded (7x30) tinned copper conductors.
2. PE insulation.
3. Aluminum foil-polyester tape shield with 100 percent shield coverage.
4. Fluorinated ethylene propylene jacket.
5. Conductors are cabled on common axis with No. 24 AWG, stranded (7x32) tinned copper drain wire.
6. Flame Resistance: Comply with NFPA 262.

2.5 RS-485 CABLE

A. Plenum-Rated Cable: NFPA 70, Type CMP.

1. Paired, two pairs, No. 22 AWG, stranded (7x30) tinned-copper conductors.
2. Fluorinated ethylene propylene insulation.
3. Unshielded.
4. Fluorinated ethylene propylene jacket.
5. Flame Resistance: NFPA 262.

2.6 LOW-VOLTAGE CONTROL CABLE

A. Plenum-Rated, Paired Cable: NFPA 70, Type CMP.

1. Multi-pair, twisted, No. 18 AWG, stranded (19x30) tinned-copper conductors.
2. PVC insulation.
3. Unshielded.
4. PVC jacket.
5. Flame Resistance: Comply with NFPA 262.

2.7 CONTROL-CIRCUIT CONDUCTORS

A. Class 1 Control Circuits: Stranded copper, Type THHN/THWN-2, complying with UL 83 in raceway.

B. Class 2 Control Circuits: Stranded copper, Type THHN/THWN-2, complying with UL 83 in raceway.

C. Class 3 Remote-Control and Signal Circuits: Stranded copper, Type THHN/THWN-2, complying with UL 83 in raceway.

D. Class 2 Control Circuits and Class 3 Remote-Control and Signal Circuits That Supply Critical Circuits: Circuit Integrity (CI) cable.

1. Smoke control signaling and control circuits.

2.8 FIRE-ALARM WIRE AND CABLE

A. General Wire and Cable Requirements: NRTL listed and labeled as complying with NFPA 70, Article 760.

B. Signaling Line Circuits: Twisted, shielded pair, size as recommended by system manufacturer.

1. Circuit Integrity Cable: Twisted shielded pair, NFPA 70, Article 760, Classification CI, for power-limited fire-alarm signal service Type FPL. NRTL listed and labeled as complying with UL 1424 and UL 2196 for a two-hour rating.

C. Non-Power-Limited Circuits: Solid-copper conductors with 600-V rated, 75 deg C, color-coded insulation, and complying with requirements in UL 2196 for a two-hour rating.

1. Low-Voltage Circuits: No. 16 AWG, minimum, in pathway.
2. Line-Voltage Circuits: No. 12 AWG, minimum, in pathway.
3. Multiconductor Armored Cable: NFPA 70, Type MC, copper conductors, Type TFN/THHN conductor insulation, copper drain wire, copper armor with outer jacket with red identifier stripe, NTRL listed for fire-alarm and cable tray installation, plenum rated.

2.9 SOURCE QUALITY CONTROL

A. Factory test balanced twisted pair cables according to TIA-568-C.2.

B. Cable will be considered defective if it does not pass tests and inspections.

C. Prepare test and inspection reports.

PART 3 - EXECUTION

3.1 EXAMINATION

A. Test balanced twisted pair cables on receipt at Project site.

1. Test each pair of twisted pair cable for open and short circuits.

3.2 INSTALLATION OF RACEWAYS AND BOXES

A. Comply with requirements in "Raceways and Boxes for Electrical Systems" for raceway selection and installation requirements for boxes, conduits, and wireways as supplemented or modified in this Section.

1. Outlet boxes shall be no smaller than 2 inches (50 mm) wide, 3 inches (75 mm) high, and 2-1/2 inches (64 mm) deep.
2. Flexible metal conduit shall not be used.

B. Comply with TIA-569-D for pull-box sizing and length of conduit and number of bends between pull points.

C. Install manufactured conduit sweeps and long-radius elbows if possible.

D. Raceway Installation in Equipment Rooms:

1. Position conduit ends adjacent to a corner on backboard if a single piece of plywood is installed, or in the corner of the room if multiple sheets of plywood are installed around perimeter walls of the room.
2. Install cable trays to route cables if conduits cannot be located in these positions.
3. Secure conduits to backboard if entering the room from overhead.
4. Extend conduits 4 inches above finished floor.
5. Install metal conduits with grounding bushings and connect with grounding conductor to grounding system.

3.3 INSTALLATION OF CONDUCTORS AND CABLES

A. Comply with NECA 1.

B. General Requirements for Cabling:

1. Comply with TIA-568-C Series of standards.
2. Comply with BICSI ITSIMM, Ch. 5, "Copper Structured Cabling Systems."
3. Terminate all conductors; no cable shall contain unterminated elements. Make terminations only at indicated outlets, terminals, and cross-connect and patch panels.
4. Cables may not be spliced and shall be continuous from terminal to terminal. Do not splice cable between termination, tap, or junction points.
5. Cables serving a common system may be grouped in a common raceway. Install network cabling and control wiring and cable in separate raceway from power wiring. Do not group conductors from different systems or different voltages.
6. Secure and support cables at intervals not exceeding 30 inches and not more than 6 inches from cabinets, boxes, fittings, outlets, racks, frames, and terminals.
7. Bundle, lace, and train conductors to terminal points without exceeding manufacturer's limitations on bending radii, but not less than radii specified in BICSI ITSIMM, Ch. 5, "Copper Structured Cabling Systems." Install lacing bars and distribution spools.
8. Do not install bruised, kinked, scored, deformed, or abraded cable. Remove and discard cable if damaged during installation and replace it with new cable.
9. Cold-Weather Installation: Bring cable to room temperature before de-reeling. Do not use heat lamps for heating.
10. Pulling Cable: Comply with BICSI ITSIMM, Ch. 5, "Copper Structured Cabling Systems." Monitor cable pull tensions.
11. Support: Do not allow cables to lay on removable ceiling tiles.
12. Secure: Fasten securely in place with hardware specifically designed and installed so as to not damage cables.
13. Provide strain relief.
14. Keep runs short. Allow extra length for connecting to terminals. Do not bend cables in a radius less than 10 times the cable OD. Use sleeves or grommets to protect cables from vibration at points where they pass around sharp corners and through penetrations.
15. Ground wire shall be copper, and grounding methods shall comply with IEEE C2. Demonstrate ground resistance.

C. Balanced Twisted Pair Cable Installation:

1. Comply with TIA-568-C.2.
2. Install termination hardware as specified in "Communications Copper Horizontal Cabling" unless otherwise indicated.
3. Do not untwist UTP cables more than 1/2 inch at the point of termination to maintain cable geometry.

D. Installation of Control-Circuit Conductors:

1. Install wiring in raceways or j-hooks with plenum rated cabling. Comply with requirements specified in "Raceways and Boxes for Electrical Systems."

E. Open-Cable Installation:

1. Install cabling with horizontal and vertical cable guides in telecommunications spaces with terminating hardware and interconnection equipment.
2. Suspend copper cable not in a wireway or pathway a minimum of 8 inches above ceilings by cable supports not more than 30 inches apart.
3. Cable shall not be run through or on structural members or in contact with pipes, ducts, or other potentially damaging items. Do not run cables between structural members and corrugated panels.

F. Installation of Cable Routed Exposed under Raised Floors:

1. Install plenum-rated cable only.
2. Install cabling after the flooring system has been installed in raised floor areas.
3. Below each feed point, neatly coil a minimum of 72 inches of cable in a coil not less than 18 inches in diameter.

3.4 REMOVAL OF CONDUCTORS AND CABLES

A. Remove abandoned conductors and cables. Abandoned conductors and cables are those installed that are not terminated at equipment and are not identified with a tag for future use.

3.5 CONTROL-CIRCUIT CONDUCTORS

A. Minimum Conductor Sizes:

1. Class 1 remote-control and signal circuits; No 14 AWG.
2. Class 2 low-energy, remote-control, and signal circuits; No. 16 AWG.
3. Class 3 low-energy, remote-control, alarm, and signal circuits; No 12 AWG.

3.6 FIRESTOPPING

A. Comply with TIA-569-D, Annex A, "Firestopping."

B. Comply with BICSI TDMM, "Firestopping" Chapter.

3.7 GROUNDING

A. For data communication wiring, comply with TIA-607-B and with BICSI TDMM, "Bonding and Grounding (Earthing)" Chapter.

B. For low-voltage control wiring and cabling, comply with requirements "Grounding and Bonding for Electrical Systems."

3.8 IDENTIFICATION

A. Comply with requirements for identification specified in "Identification for Electrical Systems."

B. Identify data and communications system components, wiring, and cabling according to TIA-606-B; label printers shall use label stocks, laminating adhesives, and inks complying with UL 969.

C. Identify each wire on each end and at each terminal with a number-coded identification tag. Each wire shall have a unique tag.

3.9 FIELD QUALITY CONTROL

A. Tests and Inspections:

1. Visually inspect cable jacket materials for UL or third-party certification markings. Inspect cabling terminations to confirm color-coding for pin assignments and inspect cabling connections to confirm compliance with TIA-568-C.1.
2. Visually inspect cable placement, cable termination, grounding and bonding, equipment, and patch cords, and labeling of all components.

B. End-to-end cabling will be considered defective if it does not pass tests and inspections.

C. Prepare test and inspection reports.

END OF SECTION 260523

SECTION 260526 - GROUNDING AND BONDING FOR ELECTRICAL SYSTEMS

PART 1 - GENERAL

1.1 SUMMARY

A. Section includes grounding and bonding systems and equipment.

B. Section includes grounding and bonding systems and equipment, plus the following special applications:

1. Underground distribution grounding.
2. Ground bonding common with lightning protection system.
3. Foundation steel electrodes.

1.2 ACTION SUBMITTALS

A. Product Data: For each type of product.

1.3 INFORMATIONAL SUBMITTALS

A. Coordination Drawings: Plans showing dimensioned as-built locations of grounding features specified in "Field Quality Control" Article.

B. Field quality-control reports.

1.4 CLOSEOUT SUBMITTALS

A. Operation and maintenance data.

1. Plans showing as-built, dimensioned locations of system described in "Field Quality Control" Article, including the following:

a. Test wells.
b. Ground rods.
c. Ground rings.
d. Grounding arrangements and connections for separately derived systems.

2. Instructions for periodic testing and inspection of grounding features at grounding connections for separately derived systems.

a. Tests shall determine if ground-resistance or impedance values remain within specified maximums, and instructions shall recommend corrective action if values do not.
b. Include recommended testing intervals.

1.5 QUALITY ASSURANCE

A. Testing Agency Qualifications: Certified by NETA.

PART 2 - PRODUCTS

2.1 SYSTEM DESCRIPTION

A. Electrical Components, Devices, and Accessories: Listed and labeled as defined in NFPA 70, by a qualified testing agency, and marked for intended location and application.

B. Comply with UL 467 for grounding and bonding materials and equipment.

2.2 MANUFACTURERS

A. Manufacturers: Subject to compliance with requirements, provide products by one of the following:

1. Burndy; Part of Hubbell Electrical Systems.
2. ERICO; a brand of nVent.
3. Galvan Industries, Inc.; Electrical Products Division, LLC.
4. O-Z/Gedney; a brand of Emerson Industrial Automation.
5. Thomas & Betts Corporation; A Member of the ABB Group.

2.3 CONDUCTORS

A. Insulated Conductors: Copper or tinned-copper wire or cable insulated for 600 V unless otherwise required by applicable Code or authorities having jurisdiction.

B. Bare Copper Conductors:

1. Solid Conductors: ASTM B 3.
2. Stranded Conductors: ASTM B 8.
3. Tinned Conductors: ASTM B 33.
4. Bonding Cable: 28 kcmil, 14 strands of No. 17 AWG conductor, 1/4 inch in diameter.
5. Bonding Conductor: No. 4 or No. 6 AWG, stranded conductor.
6. Bonding Jumper: Copper tape, braided conductors terminated with copper ferrules; 1-5/8 inches wide and 1/16 inch thick.
7. Tinned Bonding Jumper: Tinned-copper tape, braided conductors terminated with copper ferrules; 1-5/8 inches wide and 1/16 inch thick.

C. Grounding Bus: Predrilled rectangular bars of annealed copper, 1/4 by 4 inches in cross section, with 9/32-inch holes spaced 1-1/8 inches apart. Stand-off insulators for mounting shall comply with UL 891 for use in switchboards, 600 V and shall be Lexan or PVC, impulse tested at 5000 V.

2.4 CONNECTORS

A. Listed and labeled by an NRTL acceptable to authorities having jurisdiction for applications in which used and for specific types, sizes, and combinations of conductors and other items connected.

B. Welded Connectors: Exothermic-welding kits of types recommended by kit manufacturer for materials being joined and installation conditions.

C. Bus-Bar Connectors: Compression type, copper or copper alloy, with two wire terminals.

D. Beam Clamps: Mechanical type, terminal, ground wire access from four directions, with dual, tin-plated or silicon bronze bolts.

E. Cable-to-Cable Connectors: Compression type, copper or copper alloy.

F. Cable Tray Ground Clamp: Mechanical type, zinc-plated malleable iron.

G. Conduit Hubs: Mechanical type, terminal with threaded hub.

D. Ground Rod Clamps: Mechanical type, copper or copper alloy, terminal with hex head bolt.

E. Lay-in Lug Connector: Mechanical type, copper rated for direct burial terminal with set screw.

F. Signal Reference Grid Clamp: Mechanical type, stamped-steel terminal with hex head screw.

G. Straps: Solid copper, copper lugs. Rated for 600 A.

H. U-Bolt Clamps: Mechanical type, copper or copper alloy, terminal listed for direct burial.

I. Water Pipe Clamps:

1. Mechanical type, two pieces with stainless-steel bolts.

    a. Material: Die-cast zinc alloy.
    b. Listed for direct burial.

2. U-bolt type with malleable-iron clamp and copper ground connector rated for direct burial.

2.5 GROUNDING ELECTRODES

A. Ground Rods: Copper-clad steel, sectional type; 3/4 inch by 10 feet.

B. Ground Plates: 1/4 inch thick, hot dip galvanized.

PART 3 - EXECUTION

3.1 APPLICATIONS

A. Conductors: Install solid conductor for No. 10 AWG and smaller, and stranded conductors for No. 8 AWG and larger unless otherwise indicated.

B. Grounding Bus: Install in electrical equipment rooms, in rooms housing service equipment, and elsewhere as indicated.

1. Install bus horizontally, on insulated spacers 2 inches minimum from wall, 6 inches above finished floor unless otherwise indicated.
2. Where indicated on both sides of doorways, route bus up to top of door frame, across top of doorway, and down; connect to horizontal bus.

C. Conductor Terminations and Connections:

1. Pipe and Equipment Grounding Conductor Terminations: Bolted connectors.
2. Underground Connections: Welded connectors except at test wells and as otherwise indicated.
3. Connections to Ground Rods at Test Wells: Bolted connectors.
4. Connections to Structural Steel: Welded connectors.

3.2 GROUNDING AT THE SERVICE

A. Equipment grounding conductors and grounding electrode conductors shall be connected to the ground bus. Install a main bonding jumper between the neutral and ground buses.

3.3 GROUNDING SEPARATELY DERIVED SYSTEMS

A. Generator: Install grounding electrode(s) at the generator location. The electrode shall be connected to the equipment grounding conductor and to the frame of the generator.

B. Dry-type Transformer: Install a main bonding jumper between the neutral and ground buses inside of the transformer enclosure. Connect transformer ground to building grounding electrode system. Provide supply side bonding jumper from the transformer ground to the first panel supplied from the transformer secondary terminals.

3.4 GROUNDING UNDERGROUND DISTRIBUTION SYSTEM COMPONENTS

A. Comply with IEEE C2 grounding requirements.

B. Grounding Manholes and Handholes: Install a driven ground rod through manhole or handhole floor, close to wall, and set rod depth so 4 inches will extend above finished floor. If necessary, install ground rod before manhole is placed and provide No. 1/0 AWG bare, tinned-copper conductor from ground rod into manhole through a waterproof sleeve in manhole wall. Protect ground rods passing through concrete floor with a double wrapping of pressure-sensitive insulating tape or heat-shrunk insulating sleeve from 2 inches above to 6 inches below concrete. Seal floor opening with waterproof, nonshrink grout.

C. Grounding Connections to Manhole Components: Bond exposed-metal parts such as inserts, cable racks, pulling irons, ladders, and cable shields within each manhole or handhole, to ground rod or grounding conductor. Make connections with No. 4 AWG minimum, stranded, hard-drawn copper bonding conductor. Train conductors level or plumb around corners and fasten to manhole walls. Connect to cable armor and cable shields according to written instructions by manufacturer of splicing and termination kits.

D. Pad-Mounted Transformers and Switches: Install two ground rods and ground ring around the pad. Ground pad-mounted equipment and noncurrent-carrying metal items associated with

substations by connecting them to underground cable and grounding electrodes. Install tinned-copper conductor not less than No. 2 AWG for ground ring and for taps to equipment grounding terminals. Bury ground ring not less than 6 inches from the foundation.

3.5 EQUIPMENT GROUNDING

A. Install insulated equipment grounding conductors with all feeders and branch circuits.

B. Air-Duct Equipment Circuits: Install insulated equipment grounding conductor to duct-mounted electrical devices operating at 120 V and more, including air cleaners, heaters, dampers, humidifiers, and other duct electrical equipment. Bond conductor to each unit and to air duct and connected metallic piping.

C. Water Heater, Heat-Tracing, and Anti-frost Heating Cables: Install a separate insulated equipment grounding conductor to each electric water heater and heat-tracing cable. Bond conductor to heater units, piping, connected equipment, and components.

D. Isolated Grounding Receptacle Circuits: Install an insulated equipment grounding conductor connected to the receptacle grounding terminal. Isolate conductor from raceway and from panelboard grounding terminals. Terminate at equipment grounding conductor terminal of the applicable derived system or service unless otherwise indicated.

E. Isolated Equipment Enclosure Circuits: For designated equipment supplied by a branch circuit or feeder, isolate equipment enclosure from supply circuit raceway with a nonmetallic raceway fitting listed for the purpose. Install fitting where raceway enters enclosure and install a separate insulated equipment grounding conductor. Isolate conductor from raceway and from panelboard grounding terminals. Terminate at equipment grounding conductor terminal of the applicable derived system or service unless otherwise indicated.

F. Poles Supporting Outdoor Lighting Fixtures: Install grounding electrode and a separate insulated equipment grounding conductor in addition to grounding conductor installed with branch-circuit conductors.

3.6 INSTALLATION

A. Grounding Conductors: Route along shortest and straightest paths possible unless otherwise indicated or required by Code. Avoid obstructing access or placing conductors where they may be subjected to strain, impact, or damage.

B. Ground Bonding Common with Lightning Protection System: Comply with NFPA 780 and UL 96 when interconnecting with lightning protection system. Bond electrical power system ground directly to lightning protection system grounding conductor at closest point to electrical service grounding electrode. Use bonding conductor sized same as system grounding electrode conductor and install in conduit.

C. Ground Rods: Drive rods until tops are 2 inches below finished floor or final grade unless otherwise indicated.

1. Interconnect ground rods with grounding electrode conductor below grade and as otherwise indicated. Make connections without exposing steel or damaging coating if any.
2. Use exothermic welds for all below-grade connections.

3. For grounding electrode system, install at least three rods spaced at least one-rod length from each other and located at least the same distance from other grounding electrodes, and connect to the service grounding electrode conductor.

D. Test Wells: Ground rod driven through drilled hole in bottom of handhole. Handholes are specified in Section 260543 "Underground Ducts and Raceways for Electrical Systems," and shall be at least 12 inches deep, with cover.

1. Install at least one test well for each service unless otherwise indicated. Install at the ground rod electrically closest to service entrance. Set top of test well flush with finished grade or floor.

E. Bonding Straps and Jumpers: Install in locations accessible for inspection and maintenance except where routed through short lengths of conduit.

1. Bonding to Structure: Bond straps directly to basic structure, taking care not to penetrate any adjacent parts.
2. Bonding to Equipment Mounted on Vibration Isolation Hangers and Supports: Install bonding so vibration is not transmitted to rigidly mounted equipment.
3. Use exothermic-welded connectors for outdoor locations; if a disconnect-type connection is required, use a bolted clamp.

F. Grounding and Bonding for Piping:

1. Metal Water Service Pipe: Install insulated copper grounding conductors, in conduit, from building's main service equipment, or grounding bus, to main metal water service entrances to building. Connect grounding conductors to main metal water service pipes; use a bolted clamp connector or bolt a lug-type connector to a pipe flange by using one of the lug bolts of the flange. Where a dielectric main water fitting is installed, connect grounding conductor on street side of fitting. Bond metal grounding conductor conduit or sleeve to conductor at each end.
2. Water Meter Piping: Use braided-type bonding jumpers to electrically bypass water meters. Connect to pipe with a bolted connector.
3. Bond each aboveground portion of gas piping system downstream from equipment shutoff valve.

G. Bonding Interior Metal Ducts: Bond metal air ducts to equipment grounding conductors of associated fans, blowers, electric heaters, and air cleaners. Install bonding jumper to bond across flexible duct connections to achieve continuity.

H. Grounding for Steel Building Structure: Install a driven ground rod at base of each corner column and at intermediate exterior columns at distances not more than 60 feet apart.

I. Concrete-Encased Grounding Electrode (Ufer Ground): Fabricate according to NFPA 70; use a minimum of 20 feet of bare copper conductor not smaller than No. 4 AWG.

1. If concrete foundation is less than 20 feet long, coil excess conductor within base of foundation.
2. Bond grounding conductor to reinforcing steel in at least four locations and to anchor bolts. Extend grounding conductor below grade and connect to building's grounding grid or to grounding electrode external to concrete.

J. Connections: Make connections so possibility of galvanic action or electrolysis is minimized. Select connectors, connection hardware, conductors, and connection methods so metals in direct contact are galvanically compatible.

1. Use electroplated or hot-tin-coated materials to ensure high conductivity and to make contact points closer in order of galvanic series.
2. Make connections with clean, bare metal at points of contact.
3. Make aluminum-to-steel connections with stainless-steel separators and mechanical clamps.
4. Make aluminum-to-galvanized-steel connections with tin-plated copper jumpers and mechanical clamps.
5. Coat and seal connections having dissimilar metals with inert material to prevent future penetration of moisture to contact surfaces.

3.7 FIELD QUALITY CONTROL

A. Perform tests and inspections.

B. Tests and Inspections:

1. After installing grounding system but before permanent electrical circuits have been energized, test for compliance with requirements.
2. Inspect physical and mechanical condition. Verify tightness of accessible, bolted, electrical connections with a calibrated torque wrench according to manufacturer's written instructions.
3. Test completed grounding system at each location where a maximum ground-resistance level is specified, at service disconnect enclosure grounding terminal, at ground test wells, and at individual ground rods. Make tests at ground rods before any conductors are connected.

    a. Measure ground resistance no fewer than two full days after last trace of precipitation and without soil being moistened by any means other than natural drainage or seepage and without chemical treatment or other artificial means of reducing natural ground resistance.
    b. Perform tests by fall-of-potential method according to IEEE 81.

4. Prepare dimensioned Drawings locating each test well, ground rod and ground-rod assembly, and other grounding electrodes. Identify each by letter in alphabetical order, and key to the record of tests and observations. Include the number of rods driven and their depth at each location, and include observations of weather and other phenomena that may affect test results. Describe measures taken to improve test results.

C. Grounding system will be considered defective if it does not pass tests and inspections.

D. Prepare test and inspection reports.

E. Report measured ground resistances that exceed the following values:

1. Power and Lighting Equipment or System with Capacity of 500 kVA and Less: 10 ohms.
2. Power and Lighting Equipment or System with Capacity of 500 to 1000 kVA: 5 ohms.
3. Power and Lighting Equipment or System with Capacity More Than 1000 kVA: 3 ohms.
4. Power Distribution Units or Panelboards Serving Electronic Equipment: 3 ohms.
5. Substations and Pad-Mounted Equipment: 5 ohms.
6. Manhole Grounds: 10 ohms.

F. Excessive Ground Resistance: If resistance to ground exceeds specified values, notify Architect promptly and include recommendations to reduce ground resistance.

END OF SECTI

THIS PAGE LEFT INTENTIONALLY BLANK

SECTION 260529 - HANGERS AND SUPPORTS FOR ELECTRICAL SYSTEMS

PART 1 - GENERAL

1.1 RELATED DOCUMENTS

A. Drawings and general provisions of the Contract, including General and Supplementary Conditions and Division 01 Specification Sections, apply to this Section.

1.2 SUMMARY

A. Section Includes:

1. Steel slotted support systems.
2. Aluminum slotted support systems.
3. Conduit and cable support devices.
4. Support for conductors in vertical conduit.
5. Structural steel for fabricated supports and restraints.
6. Mounting, anchoring, and attachment components, including powder-actuated fasteners, mechanical expansion anchors, concrete inserts, clamps, through bolts, toggle bolts, and hanger rods.
7. Fabricated metal equipment support assemblies.

1.3 ACTION SUBMITTALS

A. Product Data: For each type of product.

1. Include construction details, material descriptions, dimensions of individual components and profiles, and finishes for the following:

a. Slotted support systems, hardware, and accessories.
b. Clamps.
c. Hangers.
d. Sockets.
e. Eye nuts.
f. Fasteners.
g. Anchors.
h. Saddles.
i. Brackets.

2. Include rated capacities and furnished specialties and accessories.

PART 2 - PRODUCTS

2.1 SUPPORT, ANCHORAGE, AND ATTACHMENT COMPONENTS

A. Steel Slotted Support Systems: Preformed steel channels and angles with minimum 13/32-inch-diameter holes at a maximum of 8 inches o.c. in at least one surface.

1. Manufacturers: Subject to compliance with requirements, undefined:

    a. Allied Tube & Conduit; a part of Atkore International.
    b. B-line, an Eaton business.
    c. Thomas & Betts Corporation; A Member of the ABB Group.
    d. Unistrut; Part of Atkore International.

2. Standard: Comply with MFMA-4 factory-fabricated components for field assembly.
3. Material for Channel, Fittings, and Accessories: Galvanized steel.
4. Channel Width: Selected for applicable load criteria.
5. Metallic Coatings: Hot-dip galvanized after fabrication and applied according to MFMA-4.
6. Protect finishes on exposed surfaces from damage by applying a strippable, temporary protective covering before shipping.

B. Aluminum Slotted Support Systems: Extruded-aluminum channels and angles with minimum 13/32-inch- diameter holes at a maximum of 8 inches o.c. in at least one surface.

1. Manufacturers: Subject to compliance with requirements, undefined:

    a. Cooper Industries, Inc.
    b. Thomas & Betts Corporation; A Member of the ABB Group.
    c. Unistrut; Part of Atkore International.

2. Standard: Comply with MFMA-4 factory-fabricated components for field assembly.
3. Channel Material: 6063-T5 aluminum alloy.
4. Fittings and Accessories Material: 5052-H32 aluminum alloy.
5. Channel Width: Selected for applicable load criteria.
6. Painted Coatings: Manufacturer's standard painted coating applied according to MFMA-4.
7. Protect finishes on exposed surfaces from damage by applying a strippable, temporary protective covering before shipping.

C. Conduit and Cable Support Devices: Steel hangers, clamps, and associated fittings, designed for types and sizes of raceway or cable to be supported. Cable-ties shall be of the Type 2S or Type 21S per NEC 330.30(A).

D. Support for Conductors in Vertical Conduit: Factory-fabricated assembly consisting of threaded body and insulating wedging plug or plugs for nonarmored electrical conductors or cables in riser conduits. Plugs shall have number, size, and shape of conductor gripping pieces as required to suit individual conductors or cables supported. Body shall be made of malleable iron.

E. Structural Steel for Fabricated Supports and Restraints: ASTM A 36/A 36M steel plates, shapes, and bars; black and galvanized.

F. Mounting, Anchoring, and Attachment Components: Items for fastening electrical items or their supports to building surfaces include the following:

1. Powder-Actuated Fasteners: Threaded-steel stud, for use in hardened portland cement concrete, steel, or wood, with tension, shear, and pullout capacities appropriate for supported loads and building materials where used.

    a. Manufacturers: Subject to compliance with requirements, undefined:
        1) Hilti, Inc.
        2) ITW Ramset/Red Head; Illinois Tool Works, Inc.
        3) MKT Fastening, LLC.

2. Mechanical-Expansion Anchors: Insert-wedge-type, stainless steel, for use in hardened portland cement concrete, with tension, shear, and pullout capacities appropriate for supported loads and building materials where used.

    a. Manufacturers: Subject to compliance with requirements, undefined:
        1) B-line, an Eaton business.
        2) Hilti, Inc.
        3) ITW Ramset/Red Head; Illinois Tool Works, Inc.
        4) MKT Fastening, LLC.

3. Concrete Inserts: Steel or malleable-iron, slotted support system units are similar to MSS Type 18 units and comply with MFMA-4 or MSS SP-58.
4. Clamps for Attachment to Steel Structural Elements: MSS SP-58 units are suitable for attached structural element.
5. Through Bolts: Structural type, hex head, and high strength. Comply with ASTM F 3125/F 3125M, Grade A325.
6. Hanger Rods: Threaded steel.

2.2 FABRICATED METAL EQUIPMENT SUPPORT ASSEMBLIES

A. Description: Welded or bolted structural-steel shapes, shop or field fabricated to fit dimensions of supported equipment.

B. Materials: Comply with requirements in Section 055000 "Metal Fabrications" for steel shapes and plates.

PART 3 - EXECUTION

3.1 APPLICATION

A. Comply with the following standards for application and installation requirements of hangers and supports, except where requirements on Drawings or in this Section are stricter:

    1) NECA 1.
    2) NECA 101
    3) NECA 102.
    4) NECA 105.
    5) NECA 111.

B. Comply with requirements in Section 078413 "Penetration Firestopping" for firestopping materials and installation for penetrations through fire-rated walls, ceilings, and assemblies.

C. Comply with requirements for raceways and boxes specified in Section 260533 "Raceways and Boxes for Electrical Systems."

D. Maximum Support Spacing and Minimum Hanger Rod Size for Raceways: Space supports for EMT, IMC, and RMC as required by NFPA 70. Minimum rod size shall be 1/4 inch in diameter.

E. Multiple Raceways or Cables: Install trapeze-type supports fabricated with steel slottedsupport system, sized so capacity can be increased by at least 25 percent in future without exceeding specified design load limits.

1. Secure raceways and cables to these supports with two-bolt conduit clamps.

F. Spring-steel clamps designed for supporting single conduits without bolts may be used for 1-1/2-inch and smaller raceways serving branch circuits and communication systems above suspended ceilings, and for fastening raceways to trapeze supports.

3.2 SUPPORT INSTALLATION

A. Comply with NECA 1 and NECA 101 for installation requirements except as specified in this article.

B. Raceway Support Methods: In addition to methods described in NECA 1, EMT IMC and RMC may be supported by openings through structure members, according to NFPA 70.

C. Strength of Support Assemblies: Where not indicated, select sizes of components so strength will be adequate to carry present and future static loads within specified loading limits. Minimum static design load used for strength determination shall be weight of supported components plus 200 lb .

D. Mounting and Anchorage of Surface-Mounted Equipment and Components: Anchor and fasten electrical items and their supports to building structural elements by the following methods unless otherwise indicated by code:

1. To Wood: Fasten with lag screws or through bolts.
2. To New Concrete: Bolt to concrete inserts.
3. To Masonry: Approved toggle-type bolts on hollow masonry units and expansion anchor fasteners on solid masonry units.
4. To Existing Concrete: Expansion anchor fasteners.
5. Instead of expansion anchors, powder-actuated driven threaded studs provided with lock washers and nuts may be used in existing standard-weight concrete 4 inches thick or greater. Do not use for anchorage to lightweight-aggregate concrete or for slabs less than 4 inches thick.
6. To Steel: Beam clamps (MSS SP-58, Type 19, 21, 23, 25, or 27), complying with MSS SP-69.

E. Drill holes for expansion anchors in concrete at locations and to depths that avoid the need for reinforcing bars.

3.3 INSTALLATION OF FABRICATED METAL SUPPORTS

A. Comply with installation requirements in Section 055000 "Metal Fabrications" for site-fabricated metal supports.

B. Cut, fit, and place miscellaneous metal supports accurately in location, alignment, and elevation to support and anchor electrical materials and equipment.

C. Field Welding: Comply with AWS D1.1/D1.1M.

3.4 CONCRETE BASES

A. Construct concrete bases of dimensions indicated, but not less than 4 inches larger in both directions than supported unit, and so anchors will be a minimum of 10 bolt diameters from edge of the base.

B. Use 3000 psi, 28-day compressive-strength concrete. Concrete materials, reinforcement, and placement requirements are specified in Section 033000 "Cast-in-Place Concrete."

C. Anchor equipment to concrete base as follows:

1. Place and secure anchorage devices. Use supported equipment manufacturer's setting drawings, templates, diagrams, instructions, and directions furnished with items to be embedded.
2. Install anchor bolts to elevations required for proper attachment to supported equipment.
3. Install anchor bolts according to anchor-bolt manufacturer's written instructions.

END OF SECTION 260529

THIS PAGE LEFT INTENTIONALLY BLANK

SECTION 260533 - RACEWAYS AND BOXES FOR ELECTRICAL SYSTEMS

PART 1 - GENERAL

1.1 RELATED DOCUMENTS

A. Drawings and general provisions of the Contract, including General and Supplementary Conditions Specification Sections, apply to this Section.

1.2 SUMMARY

A. Section Includes:

1. Metal conduits and fittings.
2. Nonmetallic conduits and fittings.
3. Metal wireways and auxiliary gutters.
4. Boxes, enclosures, and cabinets.
5. Handholes and boxes for exterior underground cabling.

B. Related Requirements:

1. "Penetration Firestopping" for firestopping at conduit and box entrances.
2. "Underground Ducts and Raceways for Electrical Systems" for exterior ductbanks, manholes, and underground utility construction.
3. "Pathways for Communications Systems" for conduits, wireways, surface pathways, innerduct, boxes, faceplate adapters, enclosures, cabinets, and handholes serving communications systems.

1.3 DEFINITIONS

A. ARC: Aluminum rigid conduit.

B. GRC: Galvanized rigid steel conduit.

C. IMC: Intermediate metal conduit.

1.4 ACTION SUBMITTALS

A. Product Data: For surface raceways, wireways and fittings, floor boxes, hinged-cover enclosures, and cabinets.

B. Shop Drawings: For custom enclosures and cabinets. Include plans, elevations, sections, and attachment details.

1.5 INFORMATIONAL SUBMITTALS

PART 2 - PRODUCTS

2.1 METAL CONDUITS AND FITTINGS

A. Metal Conduit:

1. Manufacturers: Subject to compliance with requirements, provide products by one of the following:

    a. Allied Tube & Conduit; a part of Atkore International.
    b. O-Z/Gedney; a brand of Emerson Industrial Automation.
    c. Southwire Company.
    d. Thomas & Betts Corporation; A Member of the ABB Group.
    e. Wheatland Tube Company.

2. Listing and Labeling: Listed and labeled as defined in NFPA 70, by a qualified testing agency, and marked for intended location and application.
3. GRC: Comply with ANSI C80.1 and UL 6.
4. IMC: Comply with ANSI C80.6 and UL 1242.
5. PVC-Coated Steel Conduit: PVC-coated rigid steel conduit.

    a. Comply with NEMA RN 1.
    b. Coating Thickness: 0.040 inch, minimum.
6. EMT: Comply with ANSI C80.3 and UL 797.
7. FMC: Comply with UL 1; zinc-coated steel.
8. LFMC: Flexible steel conduit with PVC jacket and complying with UL 360.

B. Metal Fittings:

1. Manufacturers: Subject to compliance with requirements, provide products by one of the following:

    a. Allied Tube & Conduit; a part of Atkore International.
    b. O-Z/Gedney; a brand of Emerson Industrial Automation.
    c. Southwire Company.
    d. Thomas & Betts Corporation; A Member of the ABB Group.
    e. Wheatland Tube Company.

2. Comply with NEMA FB 1 and UL 514B.
3. Listing and Labeling: Listed and labeled as defined in NFPA 70, by a qualified testing agency, and marked for intended location and application.
4. Fittings, General: Listed and labeled for type of conduit, location, and use.
5. Conduit Fittings for Hazardous (Classified) Locations: Comply with UL 1203 and NFPA 70.
6. Fittings for EMT:

    a. Material: Steel.
    b. Type: Setscrew or compression.

7. Expansion Fittings: PVC or steel to match conduit type, complying with UL 651, rated for environmental conditions where installed, and including flexible external bonding jumper.

8. Coating for Fittings for PVC-Coated Conduit: Minimum thickness of 0.040 inch, with overlapping sleeves protecting threaded joints.

C. Joint Compound for IMC, GRC, or ARC: Approved, as defined in NFPA 70, by authorities having jurisdiction for use in conduit assemblies, and compounded for use to lubricate and protect threaded conduit joints from corrosion and to enhance their conductivity.

2.2 NONMETALLIC CONDUITS AND FITTINGS

A. Nonmetallic Conduit:

1. Manufacturers: Subject to compliance with requirements, provide products by one of the following:

    a. RACO; Hubbell.
    b. Thomas & Betts Corporation; A Member of the ABB Group.
    c. United Fiberglass.

2. Listing and Labeling: Nonmetallic conduit shall be listed and labeled as defined in NFPA 70, by a qualified testing agency, and marked for intended location and application.
3. Fiberglass:

    a. Comply with NEMA TC 14.
    b. Comply with UL 2515 for aboveground raceways.
    c. Comply with UL 2420 for belowground raceways.

4. ENT: Comply with NEMA TC 13 and UL 1653.
5. RNC: Type EPC-40-PVC, complying with NEMA TC 2 and UL 651 unless otherwise indicated.
6. LFNC: Comply with UL 1660.

B. Nonmetallic Fittings:

1. Manufacturers: Subject to compliance with requirements, provide products by one of the following:

    a. RACO; Hubbell.
    b. Thomas & Betts Corporation; A Member of the ABB Group.
    c. United Fiberglass.

2. Fittings, General: Listed and labeled for type of conduit, location, and use.
3. Fittings for ENT and RNC: Comply with NEMA TC 3; match to conduit or tubing type and material.

    a. Fittings for LFNC: Comply with UL 514B.

4. Solvents and Adhesives: As recommended by conduit manufacturer.

2.3 METAL WIREWAYS AND AUXILIARY GUTTERS

A. Manufacturers: Subject to compliance with requirements, provide products by one of the following:

1. B-line, an Eaton business.
2. Hoffman; a brand of nVent.
3. MonoSystems, Inc.

B. Description: Sheet metal, complying with UL 870 and NEMA 250, Type 1 Type 3R unless otherwise indicated, and sized according to NFPA 70.

1. Metal wireways installed outdoors shall be listed and labeled as defined in NFPA 70, by a qualified testing agency, and marked for intended location and application.

C. Fittings and Accessories: Include covers, couplings, offsets, elbows, expansion joints, adapters, hold-down straps, end caps, and other fittings to match and mate with wireways as required for complete system.

D. Wireway Covers: Hinged type Screw-cover type unless otherwise indicated.

E. Finish: Manufacturer's standard enamel finish.

2.4 BOXES, ENCLOSURES, AND CABINETS

A. Manufacturers: Subject to compliance with requirements, provide products by one of the following:

1. Crouse-Hinds, an Eaton business.
2. EGS/Appleton Electric.
3. Hoffman; a brand of nVent.
4. Hubbell Incorporated.
5. O-Z/Gedney; a brand of Emerson Industrial Automation.
6. RACO; Hubbell.
7. Thomas & Betts Corporation; A Member of the ABB Group.
8. Wiremold / Legrand.

B. General Requirements for Boxes, Enclosures, and Cabinets: Boxes, enclosures, and cabinets installed in wet locations shall be listed for use in wet locations.

C. Sheet Metal Outlet and Device Boxes: Comply with NEMA OS 1 and UL 514A.

D. Cast-Metal Outlet and Device Boxes: Comply with NEMA FB 1, aluminum, Type FD, with gasketed cover.

E. Nonmetallic Floor Boxes: Nonadjustable, rectangular or round, as indicated on Drawings.

1. Listing and Labeling: Nonmetallic floor boxes shall be listed and labeled as defined in NFPA 70, by a qualified testing agency, and marked for intended location and application.

F. Luminaire Outlet Boxes: Nonadjustable, designed for attachment of luminaire weighing 50 lb. Outlet boxes designed for attachment of luminaires weighing more than 50 lb shall be listed and marked for the maximum allowable weight.

G. Small Sheet Metal Pull and Junction Boxes: NEMA OS 1.

H. Cast-Metal Access, Pull, and Junction Boxes: Comply with NEMA FB 1 and UL 1773, cast aluminum with gasketed cover.

I. Device Box Dimensions: 4 inches square by 2-1/8 inches deep.

J. Gangable boxes are allowed.

K. Hinged-Cover Enclosures: Comply with UL 50 and NEMA 250, Type 1 Type 3R with continuous-hinge cover with flush latch unless otherwise indicated.

1. Metal Enclosures: Steel, finished inside and out with manufacturer's standard enamel.
2. Interior Panels: Steel; all sides finished with manufacturer's standard enamel.

L. Cabinets:

1. NEMA 250, Type 1 Type 3R galvanized-steel box with removable interior panel and removable front, finished inside and out with manufacturer's standard enamel.
2. Hinged door in front cover with flush latch and concealed hinge.
3. Key latch to match panelboards.
4. Metal barriers to separate wiring of different systems and voltage.
5. Accessory feet where required for freestanding equipment.
6. Nonmetallic cabinets shall be listed and labeled as defined in NFPA 70, by a qualified testing agency, and marked for intended location and application.

2.5 HANDHOLES AND BOXES FOR EXTERIOR UNDERGROUND WIRING

A. General Requirements for Handholes and Boxes:

1. Boxes and handholes for use in underground systems shall be designed and identified as defined in NFPA 70, for intended location and application.
2. Boxes installed in wet areas shall be listed and labeled as defined in NFPA 70, by a qualified testing agency, and marked for intended location and application.

B. Polymer-Concrete Handholes and Boxes with Polymer-Concrete Cover: Molded of sand and aggregate, bound together with polymer resin, and reinforced with steel, fiberglass, or a combination of the two.

1. Manufacturers: Subject to compliance with requirements, provide products by one of the following:

a. Armorcast Products Company.
b. Oldcastle Enclosure Solutions.
c. Quazite: Hubbell Power Systems, Inc.

2. Standard: Comply with SCTE 77.
3. Configuration: Designed for flush burial with closed bottom unless otherwise indicated.
4. Cover: Weatherproof, secured by tamper-resistant locking devices and having structural load rating consistent with enclosure and handhole location.
5. Cover Finish: Nonskid finish shall have a minimum coefficient of friction of 0.50.
6. Cover Legend: Molded lettering, "ELECTRIC.".
7. Conduit Entrance Provisions: Conduit-terminating fittings shall mate with entering ducts for secure, fixed installation in enclosure wall.
8. Handholes 12 Inches Wide by 24 Inches Long and Larger: Have inserts for cable racks and pulling-in irons installed before concrete is poured.

PART 3 - EXECUTION

3.1 RACEWAY APPLICATION

A. Outdoors: Apply raceway products as specified below unless otherwise indicated:

1. Exposed Conduit: GRC IMC.
2. Concealed Conduit, Aboveground: GRC IMC EMT RNC, Type EPC-40-PVC.
3. Underground Conduit: RNC, Type EPC-40-PVC, direct buried concrete encased.
4. Connection to Vibrating Equipment (Including Transformers and Hydraulic, Pneumatic, Electric Solenoid, or Motor-Driven Equipment): LFNC.
5. Boxes and Enclosures, Aboveground: NEMA 250, Type 3R.

B. Indoors: Apply raceway products as specified below unless otherwise indicated:

1. Exposed, Not Subject to Physical Damage: EMT.
2. Exposed, Not Subject to Severe Physical Damage: EMT.
3. Exposed and Subject to Severe Physical Damage: IMC. Raceway locations include the following:

    a. Loading dock.
    b. Corridors used for traffic of mechanized carts, forklifts, and pallet-handling units.
    c. Mechanical rooms.
    d. Gymnasiums.

4. Concealed in Ceilings and Interior Walls and Partitions: EMT.
5. Connection to Vibrating Equipment (Including Transformers and Hydraulic, Pneumatic, Electric Solenoid, or Motor-Driven Equipment): FMC, except use LFMC in damp or wet locations.
6. Damp or Wet Locations: IMC.
7. Boxes and Enclosures: NEMA 250, Type 1, except use NEMA 250, Type 4 stainless steel in institutional and commercial kitchens and damp or wet locations.

C. Minimum Raceway Size: 1/2-inch trade size.

D. Raceway Fittings: Compatible with raceways and suitable for use and location.

1. Rigid and Intermediate Steel Conduit: Use threaded rigid steel conduit fittings unless otherwise indicated. Comply with NEMA FB 2.10.
2. PVC Externally Coated, Rigid Steel Conduits: Use only fittings listed for use with this type of conduit. Patch and seal all joints, nicks, and scrapes in PVC coating after installing conduits and fittings. Use sealant recommended by fitting manufacturer and apply in thickness and number of coats recommended by manufacturer.
3. EMT: Use setscrew or compression, steel fittings. Comply with NEMA FB 2.10.
4. Flexible Conduit: Use only fittings listed for use with flexible conduit. Comply with NEMA FB 2.20.

E. Install nonferrous conduit or tubing for circuits operating above 60 Hz. Where aluminum raceways are installed for such circuits and pass through concrete, install in nonmetallic sleeve.

F. Do not install aluminum conduits, boxes, or fittings in contact with concrete or earth.

G. Install surface raceways only where indicated on Drawings.

H. Do not install nonmetallic conduit where ambient temperature exceeds 120 deg F.

3.2 INSTALLATION

A. Comply with requirements in Section 260529 "Hangers and Supports for Electrical Systems" for hangers and supports.

B. Comply with NECA 1 and NECA 101 for installation requirements except where requirements on Drawings or in this article are stricter. Comply with NECA 102 for aluminum conduits. Comply with NFPA 70 limitations for types of raceways allowed in specific occupancies and number of floors.

C. Do not install raceways or electrical items on any "explosion-relief" walls or rotating equipment.

D. Do not fasten conduits onto the bottom side of a metal deck roof.

E. Keep raceways at least 6 inches away from parallel runs of flues and steam or hot-water pipes. Install horizontal raceway runs above water and steam piping.

F. Complete raceway installation before starting conductor installation.

G. Arrange stub-ups so curved portions of bends are not visible above finished slab.

H. Install no more than the equivalent of three 90-degree bends in any conduit run except for control wiring conduits, for which fewer bends are allowed. Support within 12 inches of changes in direction.

I. Make bends in raceway using large-radius preformed ells. Field bending shall be according to NFPA 70 minimum radii requirements. Use only equipment specifically designed for material and size involved.

J. Conceal conduit within finished walls, ceilings, and floors unless otherwise indicated. Install conduits parallel or perpendicular to building lines.

K. Support conduit within 12 inches of enclosures to which attached.

L. Raceways Embedded in Slabs:

1. Run conduit larger than 1-inch trade size, parallel or at right angles to main reinforcement. Where at right angles to reinforcement, place conduit close to slab support. Secure raceways to reinforcement at maximum 10-foot intervals.
2. Arrange raceways to cross building expansion joints at right angles with expansion fittings.
3. Arrange raceways to keep a minimum of 2 inches of concrete cover in all directions.
4. Do not embed threadless fittings in concrete unless specifically approved by Architect for each specific location.
5. Change from ENT to IMC before rising above floor.

M. Stub-Ups to Above Recessed Ceilings:

1. Use EMT, IMC, or RMC for raceways.
2. Use a conduit bushing or insulated fitting to terminate stub-ups not terminated in hubs or in an enclosure.

N. Threaded Conduit Joints, Exposed to Wet, Damp, Corrosive, or Outdoor Conditions: Apply listed compound to threads of raceway and fittings before making up joints. Follow compound manufacturer's written instructions.

O. Coat field-cut threads on PVC-coated raceway with a corrosion-preventing conductive compound prior to assembly.

P. Raceway Terminations at Locations Subject to Moisture or Vibration: Use insulating bushings to protect conductors including conductors smaller than No. 4 AWG.

Q. Terminate threaded conduits into threaded hubs or with locknuts on inside and outside of boxes or cabinets. Install bushings on conduits up to 1-1/4-inch trade size and insulated throat metal bushings on 1-1/2-inch trade size and larger conduits terminated with locknuts. Install insulated throat metal grounding bushings on service conduits.

R. Install raceways square to the enclosure and terminate at enclosures with locknuts. Install locknuts hand tight plus 1/4 turn more.

S. Do not rely on locknuts to penetrate nonconductive coatings on enclosures. Remove coatings in the locknut area prior to assembling conduit to enclosure to assure a continuous ground path.

T. Cut conduit perpendicular to the length. For conduits 2-inch trade size and larger, use roll cutter or a guide to make cut straight and perpendicular to the length.

U. Install pull wires in empty raceways. Use polypropylene or monofilament plastic line with not less than 200-lb tensile strength. Leave at least 12 inches of slack at each end of pull wire. Cap underground raceways designated as spare above grade alongside raceways in use.

V. Surface Raceways:

1. Install surface raceway with a minimum 2-inch radius control at bend points.
2. Secure surface raceway with screws or other anchor-type devices at intervals not exceeding 48 inches and with no less than two supports per straight raceway section. Support surface raceway according to manufacturer's written instructions. Tape and glue are not acceptable support methods.

W. Install raceway sealing fittings at accessible locations according to NFPA 70 and fill them with listed sealing compound. For concealed raceways, install each fitting in a flush steel box with a blank cover plate having a finish similar to that of adjacent plates or surfaces. Install raceway sealing fittings according to NFPA 70.

X. Install devices to seal raceway interiors at accessible locations. Locate seals so no fittings or boxes are between the seal and the following changes of environments. Seal the interior of all raceways at the following points:

1. Where conduits pass from warm to cold locations, such as boundaries of refrigerated spaces.
2. Where an underground service raceway enters a building or structure.
3. Conduit extending from interior to exterior of building.
4. Conduit extending into pressurized duct and equipment.
5. Conduit extending into pressurized zones that are automatically controlled to maintain different pressure set points.
6. Where otherwise required by NFPA 70.

Y. Comply with manufacturer's written instructions for solvent welding RNC and fittings.

Z. Expansion-Joint Fittings:

1. Install in each run of aboveground RNC that is located where environmental temperature change may exceed 30 deg F and that has straight-run length that exceeds 25 feet. Install in each run of aboveground RMC and EMT conduit that is located where environmental temperature change may exceed 100 deg F and that has straight-run length that exceeds 100 feet.
2. Install type and quantity of fittings that accommodate temperature change listed for each of the following locations:

    a. Outdoor Locations Not Exposed to Direct Sunlight: 125 deg F temperature change.
    b. Outdoor Locations Exposed to Direct Sunlight: 155 deg F temperature change.
    c. Indoor Spaces Connected with Outdoors without Physical Separation: 125 deg F temperature change.
    d. Attics: 135 deg F temperature change.

3. Install fitting(s) that provide expansion and contraction for at least 0.00041 inch per foot of length of straight run per deg F of temperature change for PVC conduits. Install fitting(s) that provide expansion and contraction for at least 0.000078 inch per foot of length of straight run per deg F of temperature change for metal conduits.
4. Install expansion fittings at all locations where conduits cross building or structure expansion joints.
5. Install each expansion-joint fitting with position, mounting, and piston setting selected according to manufacturer's written instructions for conditions at specific location at time of installation. Install conduit supports to allow for expansion movement.

AA. Flexible Conduit Connections: Comply with NEMA RV 3. Use a maximum of 72 inches of flexible conduit for recessed and semirecessed luminaires, equipment subject to vibration, noise transmission, or movement; and for transformers and motors.

1. Use LFMC in damp or wet locations subject to severe physical damage.
2. Use LFMC or LFNC in damp or wet locations not subject to severe physical damage.

BB. Mount boxes at heights indicated on Drawings. If mounting heights of boxes are not individually indicated, give priority to ADA requirements. Install boxes with height measured to center of box unless otherwise indicated.

CC. Recessed Boxes in Masonry Walls: Saw-cut opening for box in center of cell of masonry block and install box flush with surface of wall. Prepare block surfaces to provide a flat surface for a raintight connection between box and cover plate or supported equipment and box.

DD. Horizontally separate boxes mounted on opposite sides of walls so they are not in the same vertical channel.

EE. Locate boxes so that cover or plate will not span different building finishes.

FF. Support boxes of three gangs or more from more than one side by spanning two framing members or mounting on brackets specifically designed for the purpose.

GG. Fasten junction and pull boxes to or support from building structure. Do not support boxes by conduits.

HH. Set metal floor boxes level and flush with finished floor surface.

II. Set nonmetallic floor boxes level. Trim after installation to fit flush with finished floor surface.

3.3 INSTALLATION OF UNDERGROUND CONDUIT

A. Direct-Buried Conduit:

1. Excavate trench bottom to provide firm and uniform support for conduit. Prepare trench bottom as specified in Section 312000 "Earth Moving" for pipe less than 6 inches in nominal diameter.
2. Install backfill as specified in Section 312000 "Earth Moving."
3. After installing conduit, backfill and compact. Start at tie-in point, and work toward end of conduit run, leaving conduit at end of run free to move with expansion and contraction as temperature changes during this process. Firmly hand tamp backfill around conduit to provide maximum supporting strength. After placing controlled backfill to within 12 inches of finished grade, make final conduit connection at end of run and complete backfilling with normal compaction as specified in Section 312000 "Earth Moving."
4. Install manufactured duct elbows for stub-ups at poles and equipment and at building entrances through floor unless otherwise indicated. Encase elbows for stub-up ducts throughout length of elbow.
5. Install manufactured rigid steel conduit elbows for stub-ups at poles and equipment and at building entrances through floor.
   a. Couple steel conduits to ducts with adapters designed for this purpose and encase coupling with 3 inches of concrete for a minimum of 12 inches on each side of the coupling.
   b. For stub-ups at equipment mounted on outdoor concrete bases and where conduits penetrate building foundations, extend steel conduit horizontally a minimum of 60 inches from edge of foundation or equipment base. Install insulated grounding bushings on terminations at equipment.
6. Warning Planks: Bury warning planks approximately 12 inches above direct-buried conduits but a minimum of 6 inches below grade. Align planks along centerline of conduit.
7. Underground Warning Tape: Comply with requirements in Section 260553 "Identification for Electrical Systems."

3.4 INSTALLATION OF UNDERGROUND HANDHOLES AND BOXES

A. Install handholes and boxes level and plumb and with orientation and depth coordinated with connecting conduits to minimize bends and deflections required for proper entrances.

B. Unless otherwise indicated, support units on a level bed of crushed stone or gravel, graded from 1/2-inch sieve to No. 4 sieve and compacted to same density as adjacent undisturbed earth.

C. Elevation: In paved areas, set so cover surface will be flush with finished grade. Set covers of other enclosures 1 inch above finished grade.

D. Install handholes with bottom below frost line

E. Install removable hardware, including pulling eyes, cable stanchions, cable arms, and insulators, as required for installation and support of cables and conductors and as indicated. Select arm lengths to be long enough to provide spare space for future cables but short enough to preserve adequate working clearances in enclosure.

F. Field-cut openings for conduits according to enclosure manufacturer's written instructions. Cut wall of enclosure with a tool designed for material to be cut. Size holes for terminating fittings to be used, and seal around penetrations after fittings are installed.

3.5 SLEEVE AND SLEEVE-SEAL INSTALLATION FOR ELECTRICAL PENETRATIONS

A. Install sleeves and sleeve seals at penetrations of exterior floor and wall assemblies. Comply with requirements in Section 260544 "Sleeves and Sleeve Seals for Electrical Raceways and Cabling."

3.6 FIRESTOPPING

A. Install firestopping at penetrations of fire-rated floor and wall assemblies. Comply with requirements in Section 078413 "Penetration Firestopping."

3.7 PROTECTION

A. Protect coatings, finishes, and cabinets from damage and deterioration.

1. Repair damage to galvanized finishes with zinc-rich paint recommended by manufacturer.
2. Repair damage to PVC coatings or paint finishes with matching touchup coating recommended by manufacturer.

END OF SECTION 260533

THIS PAGE LEFT INTENTIONALLY BLANK

SECTION 260543 - UNDERGROUND DUCTS AND RACEWAYS FOR ELECTRICAL SYSTEMS

PART 1 - GENERAL

1.1 RELATED DOCUMENTS

A. Drawings and general provisions of the Contract, including General and Supplementary Conditions and Division 01 Specification Sections, apply to this Section.

1.2 SUMMARY

A. Section Includes:

1. Metal conduits and fittings, including GRC and PVC-coated steel conduit.
2. Rigid nonmetallic duct.
3. Flexible nonmetallic duct.
4. Duct accessories.
5. Precast concrete handholes.
6. Polymer concrete handholes and boxes with polymer concrete cover.
7. Fiberglass handholes and boxes with polymer concrete cover.
8. Fiberglass handholes and boxes.
9. High-density plastic boxes.
10. Precast manholes.
11. Cast-in-place manholes.
12. Utility structure accessories.

1.3 DEFINITIONS

A. Direct Buried: Duct or a duct bank that is buried in the ground, without any additional casing materials such as concrete.

B. Duct: A single duct or multiple ducts. Duct may be either installed singly or as component of a duct bank.

C. Duct Bank:

1. Two or more ducts installed in parallel, with or without additional casing materials.
2. Multiple duct banks.

D. GRC: Galvanized rigid (steel) conduit.

E. Trafficways: Locations where vehicular or pedestrian traffic is a normal course of events.

1.4 ACTION SUBMITTALS

A. Product Data: For each type of product.

1. Include duct-bank materials, including spacers and miscellaneous components.

2. Include duct, conduits, and their accessories, including elbows, end bells, bends, fittings, and solvent cement.
3. Include accessories for manholes, handholes, and boxes.
4. Include underground-line warning tape.
5. Include warning planks.

B. Shop Drawings:

1. Precast or Factory-Fabricated Underground Utility Structures:

a. Include plans, elevations, sections, details, attachments to other work, and accessories.
b. Include duct entry provisions, including locations and duct sizes.
c. Include reinforcement details.
d. Include frame and cover design and manhole chimneys.
e. Include step details.
f. Include grounding details.
g. Include dimensioned locations of cable rack inserts, pulling-in and lifting irons, and sumps.
h. Include joint details.

2. Factory-Fabricated Handholes and Boxes Other Than Precast Concrete:

a. Include dimensioned plans, sections, and elevations, and fabrication and installation details.
b. Include duct entry provisions, including locations and duct sizes.
c. Include cover design.
d. Include grounding details.
e. Include dimensioned locations of cable rack inserts, and pulling-in and lifting irons.

1.5 INFORMATIONAL SUBMITTALS

A. Coordination Drawings: For duct and duct bank. Show duct profiles and coordination with other utilities and underground structures.

1. Include plans and sections, drawn to scale, and show bends and locations of expansion fittings.
2. Drawings shall be signed and sealed by a qualified professional engineer.

B. Qualification Data: For professional engineer and testing agency responsible for testing nonconcrete handholes and boxes.

C. Product Certificates: For concrete and steel used in precast concrete manholes and handholes, as required by ASTM C858.

D. Source quality-control reports.

E. Field quality-control reports.

1.6 MAINTENANCE MATERIALS SUBMITTALS

A. Furnish extra materials that match products installed and that are packaged with protective covering for storage and identified with labels describing contents.

B. Furnish cable-support stanchions, arms, insulators, and associated fasteners in quantities equal to 5 percent of quantity of each item installed.

1.7 QUALITY ASSURANCE

A. Testing Agency Qualifications: Qualified according to ASTM E329 for testing indicated.

1.8 FIELD CONDITIONS

A. Interruption of Existing Electrical Service: Do not interrupt electrical service to facilities occupied by Owner or others unless permitted under the following conditions, and then only after arranging to provide temporary electrical service according to requirements indicated:

1. Notify Architect, Construction Manager, and Owner no fewer than ten days in advance of proposed interruption of electrical service.
2. Do not proceed with interruption of electrical service without Architect, Construction Manager, and Owner's written permission.

B. Ground Water: Assume ground-water level is at grade level unless a lower water table is noted on Drawings.

C. Ground Water: Assume ground-water level is 36 inches (900 mm) below ground surface unless a higher water table is noted on Drawings.

PART 2 - PRODUCTS

2.1 METAL CONDUIT AND FITTINGS

A. GRC: Comply with ANSI C80.1 and UL 6.

B. Coated Steel Conduit: PVC-coated GRC.

1. Comply with NEMA RN 1.
2. Coating Thickness: 0.040 inch (1 mm), minimum.

C. Listed and labeled as defined in NFPA 70, by a nationally recognized testing laboratory, and marked for intended location and application.

2.2 RIGID NONMETALLIC DUCT

A. Underground Plastic Utilities Duct: Type EPC-80-PVC RNC, complying with NEMA TC 2 and UL 651, with matching fittings complying with NEMA TC 3 by same manufacturer as duct.

B. Listed and labeled as defined in NFPA 70, by a nationally recognized testing laboratory, and marked for intended location and application.

C. Solvents and Adhesives: As recommended by conduit manufacturer.

2.3 FLEXIBLE NONMETALLIC DUCTS

A. HDPE Duct: Type EPEC-40 HDPE, complying with NEMA TC 7 and UL 651A.

1. Listed and labeled as defined in NFPA 70, by a nationally recognized testing laboratory, and marked for intended location and application.

2.4 DUCT ACCESSORIES

A. Duct Spacers: Factory-fabricated, rigid, PVC interlocking spacers; sized for type and size of duct with which used and selected to provide minimum duct spacing indicated while supporting duct during concreting or backfilling.

B. Underground-Line Warning Tape: Comply with requirements for underground-line warning tape specified in Section 260553 "Identification for Electrical Systems."

C. Concrete Warning Planks: Nominal 12 by 24 by 3 inches (300 by 600 by 75 mm) in size, manufactured from 6000-psi (41-MPa) concrete.

1. Color: Red dye added to concrete during batching.
2. Mark each plank with "ELECTRIC" in 2-inch- (50-mm-) high, 3/8-inch- (10-mm-) deep letters.

2.5 PRECAST CONCRETE HANDHOLES AND BOXES

A. Description: Factory-fabricated, reinforced-concrete, monolithically poured walls and bottom unless open-bottom enclosures are indicated. Frame and cover shall form top of enclosure and shall have load rating consistent with that of handhole or box.

B. Comply with ASTM C858 for design and manufacturing processes.

C. Frame and Cover: Weatherproof cast-iron frame, with cast-iron cover with recessed cover hook eyes and tamper-resistant, captive, cover-securing bolts.

D. Frame and Cover: Weatherproof steel frame, with steel cover with recessed cover hook eyes and tamper-resistant, captive, cover-securing bolts.

E. Frame and Cover: Weatherproof steel frame, with hinged steel access door assembly with tamper-resistant, captive, cover-securing bolts.

1. Cover Hinges: Concealed, with hold-open ratchet assembly.
2. Cover Handle: Recessed.

F. Frame and Cover: Weatherproof aluminum frame with hinged aluminum access door assembly with tamper-resistant, captive, cover-securing bolts.

1. Cover Hinges: Concealed, with hold-open ratchet assembly.
2. Cover Handle: Recessed.

G. Cover Finish: Nonskid finish shall have a minimum coefficient of friction of 0.50.

H. Cover Legend: Molded lettering, "ELECTRIC." Or as indicated for each service.

I. Configuration: Units shall be designed for flush burial and have open bottom unless otherwise indicated.

J. Extensions and Slabs: Designed to mate with bottom of enclosure. Same material as enclosure.

1. Extension shall provide increased depth of 12 inches (300 mm).
2. Slab: Same dimensions as bottom of enclosure and arranged to provide closure.

K. Joint Sealant: Asphaltic-butyl material with adhesion, cohesion, flexibility, and durability properties necessary to withstand maximum hydrostatic pressures at the installation location with the ground-water level at grade.

L. Knockout Panels: Precast openings in walls, arranged to match dimensions and elevations of approaching duct, plus an additional 12 inches (300 mm) vertically and horizontally to accommodate alignment variations.

1. Splayed location.
2. Knockout panels shall be located no less than 6 inches (150 mm) from interior surfaces of walls, floors, or frames and covers of handholes, but close enough to corners to facilitate racking of cables on walls.
3. Knockout panel opening shall have cast-in-place, welded-wire fabric reinforcement for field cutting and bending to tie in to concrete envelopes of duct.
4. Knockout panels shall be framed with at least two additional No. 3 steel reinforcing bars in concrete around each opening.
5. Knockout panels shall be 1-1/2 to 2 inches (38 to 50 mm) thick.

M. Duct Entrances in Handhole Walls: Cast end-bell or duct-terminating fitting in wall for each entering duct.

1. Type and size shall match fittings to duct to be terminated.
2. Fittings shall align with elevations of approaching duct and be located near interior corners of handholes to facilitate racking of cable.

N. Handholes 12 inches wide by 24 inches long (300 mm wide by 600 mm long) and larger shall have inserts for cable racks and pulling-in irons installed before concrete is poured.

2.6 POLYMER CONCRETE HANDHOLES AND BOXES WITH POLYMER CONCRETE COVER

A. Description: Molded of sand and aggregate, bound together with a polymer resin, and reinforced with steel or fiberglass or a combination of the two.

B. Standard: Comply with SCTE 77. Comply with tier requirements in "Underground Enclosure Application" Article.

C. Color: Gray.

D. Configuration: Units shall be designed for flush burial and have open bottom unless otherwise indicated.

E. Cover: Weatherproof, secured by tamper-resistant locking devices and having structural load rating consistent with enclosure.

F. Cover Finish: Nonskid finish shall have a minimum coefficient of friction of 0.50.

G. Cover Legend: Molded lettering, "ELECTRIC." Or as indicated for each service.

H. Direct-Buried Wiring Entrance Provisions: Knockouts equipped with insulated bushings or end-bell fittings, selected to suit box material, sized for wiring indicated, and arranged for secure, fixed installation in enclosure wall.

I. Duct Entrance Provisions: Duct-terminating fittings shall mate with entering duct for secure, fixed installation in enclosure wall.

J. Handholes 12 inches wide by 24 inches long (300 mm wide by 600 mm long) and larger shall have factory-installed inserts for cable racks and pulling-in irons.

2.7 FIBERGLASS HANDHOLES AND BOXES WITH POLYMER CONCRETE FRAME AND COVER

A. Description: Sheet-molded, fiberglass-reinforced, polyester resin enclosure joined to polymer concrete top ring or frame.

B. Standard: Comply with SCTE 77. Comply with tier requirements in "Underground Enclosure Application" Article.

C. Color: **[Gray] [Green].**

D. Configuration: Units shall be designed for flush burial and have open bottom unless otherwise indicated.

E. Cover: Weatherproof, secured by tamper-resistant locking devices and having structural load rating consistent with enclosure.

F. Cover Finish: Nonskid finish shall have a minimum coefficient of friction of 0.50.

G. Cover Legend: Molded lettering, “ELECTRIC.” or as indicated for each service.

H. Direct-Buried Wiring Entrance Provisions: Knockouts equipped with insulated bushings or end-bell fittings, selected to suit box material, sized for wiring indicated, and arranged for secure, fixed installation in enclosure wall.

I. Duct Entrance Provisions: Duct-terminating fittings shall mate with entering duct for secure, fixed installation in enclosure wall.

J. Handholes 12 inches wide by 24 inches long (300 mm wide by 600 mm long) and larger shall have factory-installed inserts for cable racks and pulling-in irons.

2.8 FIBERGLASS HANDHOLES AND BOXES

A. Description: Molded of fiberglass-reinforced polyester resin, with covers made of **[polymer concrete] [reinforced concrete] [cast iron] [hot-dip galvanized-steel diamond plate] [fiberglass].**

B. Standard: Comply with SCTE 77. Comply with tier requirements in "Underground Enclosure Application" Article.

C. Color: **[Gray] [Green].**

D. Configuration: Units shall be designed for flush burial and have open bottom unless otherwise indicated.

E. Cover: Weatherproof, secured by tamper-resistant locking devices and having structural load rating consistent with enclosure.

F. Cover Finish: Nonskid finish shall have a minimum coefficient of friction of 0.50.

G. Cover Legend: Molded lettering, "ELECTRIC." Or as indicated for each service.

H. Direct-Buried Wiring Entrance Provisions: Knockouts equipped with insulated bushings or end-bell fittings, selected to suit box material, sized for wiring indicated, and arranged for secure, fixed installation in enclosure wall.

I. Duct Entrance Provisions: Duct-terminating fittings shall mate with entering duct for secure, fixed installation in enclosure wall.

J. Handholes 12 inches wide by 24 inches long (300 mm wide by 600 mm long) and larger shall have factory-installed inserts for cable racks and pulling-in irons.

2.9 HIGH-DENSITY PLASTIC BOXES

A. Description: Injection molded of HDPE or copolymer-polypropylene. Cover shall be made of polymer concrete.

B. Standard: Comply with SCTE 77. Comply with tier requirements in "Underground Enclosure Application" Article.

C. Color: Gray.

D. Configuration: Units shall be designed for flush burial and have open bottom unless otherwise indicated.

E. Cover: Weatherproof, secured by tamper-resistant locking devices and having structural load rating consistent with enclosure.

F. Cover Finish: Nonskid finish shall have a minimum coefficient of friction of 0.50.

G. Cover Legend: Molded lettering, “ELECTRIC.” or as indicated for each service.

H. Direct-Buried Wiring Entrance Provisions: Knockouts equipped with insulated bushings or end-bell fittings, selected to suit box material, sized for wiring indicated, and arranged for secure, fixed installation in enclosure wall.

I. Duct Entrance Provisions: Duct-terminating fittings shall mate with entering duct for secure, fixed installation in enclosure wall.

J. Handholes 12 inches wide by 24 inches long (300 mm wide by 600 mm long) and larger shall have factory-installed inserts for cable racks and pulling-in irons.

2.10 PRECAST MANHOLES

A. Description: One-piece units and units with interlocking mating sections, complete with accessories, hardware, and features.

B. Comply with ASTM C858.

C. Structural Design Loading: Comply with requirements in "Underground Enclosure Application" Article.

D. Knockout Panels: Precast openings in walls, arranged to match dimensions and elevations of approaching duct, plus an additional 12 inches (300 mm) vertically and horizontally to accommodate alignment variations.

1. Splayed location.
2. Knockout panels shall be located no less than 6 inches (150 mm) from interior surfaces of walls, floors, or roofs of manholes, but close enough to corners to facilitate racking of cables on walls.
3. Knockout panel opening shall have cast-in-place, welded-wire fabric reinforcement for field cutting and bending to tie in to concrete envelopes of duct.
4. Knockout panel shall be framed with at least two additional No. 3 steel reinforcing bars in concrete around each opening.
5. Knockout panels shall be 1-1/2 to 2 inches (38 to 50 mm) thick.

E. Duct Entrances in Manhole Walls: Cast end-bell or duct-terminating fitting in wall for each entering duct.

1. Type and size shall match fittings to duct to be terminated.
2. Fittings shall align with elevations of approaching duct and be located near interior corners of manholes to facilitate racking of cable.

F. Ground Rod Sleeve: Provide a 3-inch (75-mm) PVC sleeve in manhole floors 2 inches (50 mm) from the wall adjacent to, but not underneath, the duct entering the structure.

G. Joint Sealant: Asphaltic-butyl material with adhesion, cohesion, flexibility, and durability properties necessary to withstand maximum hydrostatic pressures at the installation location with the ground-water level at grade.

2.11 CAST-IN-PLACE MANHOLES

A. Description: Underground utility structures, constructed in place, complete with accessories, hardware, and features. Include concrete knockout panels for duct entrance and sleeve for ground rod.

B. Materials: Comply with ASTM C858 and with Section 033000 "Cast-in-Place Concrete."

C. Structural Design Loading: As specified in "Underground Enclosure Application" Article.

2.12 UTILITY STRUCTURE ACCESSORIES

A. Accessories for Utility Structures: Utility equipment and accessory items used for utility structure access and utility support, listed and labeled for intended use and application.

B. Manhole Frames, Covers, and Chimney Components: Comply with structural design loading specified for manhole.

1. Frame and Cover: Weatherproof, gray cast iron complying with ASTM A48/A48M, Class 30B with milled cover-to-frame bearing surfaces; diameter, 26 inches (660 mm).

a. Cover Finish: Nonskid finish shall have a minimum coefficient of friction of 0.50.
b. Special Covers: Recess in face of cover designed to accept finish material in paved areas.

2. Cover Legend: Cast in. Selected to suit system.

a. Legend: "ELECTRIC-LV" for duct systems with power wires and cables for systems operating at 600 V and less.
b. Legend: "ELECTRIC-HV" for duct systems with medium-voltage cables.

3. Manhole Chimney Components: Precast concrete rings with dimensions matched to those of roof opening.

a. Mortar for Chimney Ring and Frame and Cover Joints: Comply with ASTM C270, Type M, except for quantities less than 2.0 cu. ft. (60 L) where packaged mix complying with ASTM C387, Type M, may be used.
b. Seal joints watertight using preformed plastic or rubber complying with ASTM C990. Install sealing material according to sealant manufacturers' written instructions.

C. Manhole Sump Frame and Grate: ASTM A48/A48M, Class 30B, gray cast iron.

D. Pulling Eyes in Concrete Walls: Eyebolt with reinforcing-bar fastening insert, 2-inch- (50-mm-) diameter eye, and 1-by-4-inch (25-by-100-mm) bolt.

1. Working Load Embedded in 6-Inch (150-mm), 4000-psi (27.6-MPa) Concrete: 13,000-lbf (58-kN) minimum tension.

E. Pulling Eyes in Nonconcrete Walls: Eyebolt with reinforced fastening, 1-1/4-inch- (31-mm-) diameter eye, rated 2500-lbf (11-kN) minimum tension.

F. Pulling-in and Lifting Irons in Concrete Floors: 7/8-inch- (22-mm-) diameter, hot-dip galvanized, bent steel rod; stress relieved after forming; and fastened to reinforcing rod. Exposed triangular opening.

1. Ultimate Yield Strength: 40,000-lbf (180-kN) shear and 60,000-lbf (270-kN) tension.

G. Bolting Inserts for Concrete Utility Structure Cable Racks and Other Attachments: Flared, threaded inserts of noncorrosive, chemical-resistant, nonconductive thermoplastic material; 1/2-inch (13-mm) ID by 2-3/4 inches (69 mm) deep, flared to 1-1/4 inches (31 mm) minimum at base.

1. Tested Ultimate Pullout Strength: 12,000 lbf (53 kN) minimum.

H. Ground Rod Sleeve: 3-inch (75-mm) PVC sleeve in manhole floors 2 inches (50 mm) from the wall adjacent to, but not underneath, the ducts routed from the facility.

I. Expansion Anchors for Installation after Concrete Is Cast: Zinc-plated, carbon-steel-wedge type with stainless-steel expander clip with 1/2-inch (13-mm) bolt, 5300-lbf (24-kN) rated pullout strength, and minimum 6800-lbf (30-kN) rated shear strength.

J. Cable Rack Assembly: Steel, galvanized, except insulators.

1. Stanchions: T-section or channel with provisions to connect to other sections or channels to form a continuous unit; 1-1/2 inches (38 mm) in width by nominal 24 inches (600 mm) long; punched with 14 hook holes on 1-1/2-inch (38-mm) centers for cable-arm attachment.
2. Arms: 1-1/2 inches (38 mm) wide, lengths ranging from 3 inches (75 mm) with 450-lb (204-kg) minimum capacity to 18 inches (450 mm) with 250-lb (114-kg) minimum capacity. Arms shall have slots along full length for cable ties and be arranged for secure mounting in horizontal position at any vertical location on stanchions.
3. Insulators: High-glaze, wet-process porcelain arranged for mounting on cable arms.

K. Cable Rack Assembly: Nonmetallic. Components fabricated from nonconductive, fiberglass-reinforced polymer.

1. Stanchions: Nominal 36 inches (900 mm) high by 4 inches (100 mm) wide, with provisions to connect to other sections to form a continuous unit, with minimum of nine holes for arm attachment.
2. Arms: Arranged for secure, drop-in attachment in horizontal position at any location on cable stanchions, and capable of being locked in position. Arms shall be available in lengths ranging from 3 inches (75 mm) with 450-lb (204-kg) minimum capacity to 20 inches (500 mm) with 250-lb (114-kg) minimum capacity. Top of arm shall be nominally 4 inches (100 mm) wide, and arm shall have slots along full length for cable ties.

L. Duct-Sealing Compound: Nonhardening, safe for contact with human skin, not deleterious to cable insulation, and workable at temperatures as low as 35 deg F (2 deg C). Capable of withstanding temperature of 300 deg F (150 deg C) without slump and adhering to clean surfaces of plastic ducts, metallic conduit, conduit and duct coatings, concrete, masonry, lead, cable sheaths, cable jackets, insulation materials, and common metals.

M. Fixed Manhole Ladders: Arranged for attachment to roof or wall of manhole. Ladder and mounting brackets and braces shall be fabricated from nonconductive, structural-grade, fiberglass-reinforced resin.

N. Portable Manhole Ladders: UL-listed, heavy-duty fiberglass specifically designed for portable use for access to electrical manholes. Minimum length equal to distance from deepest manhole floor to grade plus 36 inches (900 mm). One required.

O. Cover Hooks: Heavy duty, designed for lifts 60 lbf (270 N) and greater. Two required.

2.13 SOURCE QUALITY CONTROL

A. Test and inspect precast concrete utility structures according to ASTM C1037.

B. Nonconcrete Handhole and Pull-Box Prototype Test: Test prototypes of manholes and boxes for compliance with SCTE 77. Strength tests shall be for specified tier ratings of products supplied.

1. Tests of materials shall be performed by an independent testing agency.

2. Strength tests of complete boxes and covers shall be by an independent testing agency or manufacturer. A qualified registered professional engineer shall certify tests by manufacturer.
3. Testing machine pressure gages shall have current calibration certification, complying with ISO 9000 and ISO 10012, and traceable to NIST standards.

PART 3 - EXECUTION

3.1 PREPARATION

A. Coordinate layout and installation of duct, duct bank, manholes, handholes, and boxes with final arrangement of other utilities, site grading, and surface features as determined in the field. Notify Architect if there is a conflict between areas of excavation and existing structures or archaeological sites to remain.

B. Coordinate elevations of duct and duct-bank entrances into manholes, handholes, and boxes with final locations and profiles of duct and duct banks, as determined by coordination with other utilities, underground obstructions, and surface features. Revise locations and elevations as required to suit field conditions and to ensure that duct and duct bank will drain to manholes and handholes, and as approved by Architect.

C. Clear and grub vegetation to be removed and protect vegetation to remain according to Section 311000 "Site Clearing." Remove and stockpile topsoil for reapplication according to Section 311000 "Site Clearing."

3.2 UNDERGROUND DUCT APPLICATION

A. Duct for Electrical Cables More Than 600 V: Type EPC-80-PVC RNC, concrete-encased unless otherwise indicated.

B. Duct for Electrical Feeders 600 V and Less: Type EPC-40-PVC RNC, direct-buried unless otherwise indicated.

C. Duct for Electrical Branch Circuits: Type EPC-40-PVC RNC, direct-buried unless otherwise indicated.

D. Bored Underground Duct: Type EPEC-40-HDPE unless otherwise indicated.

E. Underground Ducts Crossing Driveways or Roadways: Type EPC-40 PVC RNC, encased in reinforced concrete.

F. Stub-ups: Concrete-encased RNC.

3.3 UNDERGROUND ENCLOSURE APPLICATION

A. Handholes and Boxes for 600 V and Less:

1. Units in Roadways and Other Deliberate Traffic Paths: Precast concrete. AASHTO HB 17, H-10 structural load rating.

2. Units in Driveway, Parking Lot, and Off-Roadway Locations, Subject to Occasional, Nondeliberate Loading by Heavy Vehicles: Polymer concrete, SCTE 77, Tier 15 structural load rating.
3. Units in Sidewalk and Similar Applications with a Safety Factor for Nondeliberate Loading by Vehicles: Polymer concrete units, SCTE 77, Tier 8 structural load rating.
4. Units Subject to Light-Duty Pedestrian Traffic Only: Fiberglass-reinforced polyester resin, structurally tested according to SCTE 77 with 3000-lbf (13 345-N) vertical loading.
5. Cover design load shall not exceed the design load of the handhole or box.

B. Manholes: Precast or cast-in-place concrete.

1. Units Located in Roadways and Other Deliberate Traffic Paths by Heavy or Medium Vehicles: H-20 structural load rating according to AASHTO HB 17.
2. Units Not Located in Deliberate Traffic Paths by Heavy or Medium Vehicles: H-10 load rating according to AASHTO HB 17.

3.4 EARTHWORK

A. Excavation and Backfill: Comply with Section 312000 "Earth Moving," but do not use heavy-duty, hydraulic-operated, compaction equipment.

B. Restoration: Replace area immediately after backfilling is completed.

C. Restore surface features at areas disturbed by excavation, and re-establish original grades unless otherwise indicated. Replace removed sod immediately after backfilling is completed.

D. Restore areas disturbed by trenching, storing of dirt, cable laying, and other work. Restore vegetation and include necessary topsoiling, fertilizing, liming, seeding, sodding, sprigging, and mulching. Comply with Section 329200 "Turf and Grasses" and Section 329300 "Plants."

E. Cut and patch existing pavement in the path of underground duct, duct bank, and underground structures according to "Cutting and Patching" Article in Section 017300 "Execution."

3.5 DUCT AND DUCT-BANK INSTALLATION

A. Where indicated on Drawings, install duct, spacers, and accessories into the duct-bank configuration shown. Duct installation requirements in this Section also apply to duct bank.

B. Install duct according to NEMA TCB 2.

C. Slope: Pitch duct a minimum slope of 1:300 down toward manholes and handholes and away from buildings and equipment. Slope duct from a high point between two manholes, to drain in both directions.

D. Curves and Bends: Use 5-degree angle couplings for small changes in direction. Use manufactured long sweep bends with a minimum radius of 48 inches (1200 mm), both horizontally and vertically, at other locations unless otherwise indicated.

1. Duct shall have maximum of two 90 degree bends or the total of all bends shall be no more 180 degrees between pull points.

E. Joints: Use solvent-cemented joints in duct and fittings and make watertight according to manufacturer's written instructions. Stagger couplings so those of adjacent duct do not lie in same plane.

F. Installation Adjacent to High-Temperature Steam Lines: Where duct is installed parallel to underground steam lines, perform calculations showing the duct will not be subject to environmental temperatures above 40 deg C. Where environmental temperatures are calculated to rise above 40 deg C, and anywhere the duct crosses above an underground steam line, install insulation blankets listed for direct burial to isolate the duct bank from the steam line.

G. End Bell Entrances to Manholes and Concrete and Polymer Concrete Handholes: Use end bells, spaced approximately 10 inches (250 mm) o.c. for 5-inch (125-mm) duct, and vary proportionately for other duct sizes.

1. Begin change from regular spacing to end-bell spacing 10 feet (3 m) from the end bell, without reducing duct slope and without forming a trap in the line.
2. Expansion and Deflection Fittings: Install an expansion and deflection fitting in each duct in the area of disturbed earth adjacent to manhole or handhole. Install an expansion fitting near the center of all straight line direct-buried duct with calculated expansion of more than 3/4 inch (19 mm).
3. Grout end bells into structure walls from both sides to provide watertight entrances.

H. Terminator Entrances to Manholes and Concrete and Polymer Concrete Handholes: Use manufactured, cast-in-place duct terminators, with entrances into structure spaced approximately 6 inches (150 mm) o.c. for 4-inch (100-mm) duct, and vary proportionately for other duct sizes.

1. Begin change from regular spacing to terminator spacing 10 feet (3 m) from the terminator, without reducing duct line slope and without forming a trap in the line.
2. Expansion and Deflection Fittings: Install an expansion and deflection fitting in each duct in the area of disturbed earth adjacent to manhole or handhole. Install an expansion fitting near the center of all straight line duct with calculated expansion of more than 3/4 inch (19 mm).

I. Building Wall Penetrations: Make a transition from underground duct to GRC at least 10 feet (3 m) outside the building wall, without reducing duct line slope away from the building and without forming a trap in the line. Use fittings manufactured for RNC-to-GRC transition. Install GRC penetrations of building walls as specified in Section 260544 "Sleeves and Sleeve Seals for Electrical Raceways and Cabling."

J. Sealing: Provide temporary closure at terminations of duct with pulled cables. Seal spare duct at terminations. Use sealing compound and plugs to withstand at least 15-psig (1.03-MPa) hydrostatic pressure.

K. Pulling Cord: Install 200-lbf- (1000-N-) test nylon cord in empty ducts.

L. Concrete-Encased Ducts and Duct Bank:

1. Excavate trench bottom to provide firm and uniform support for duct. Prepare trench bottoms as specified in Section 312000 "Earth Moving" for pipes less than 6 inches (150 mm) in nominal diameter.
2. Width: Excavate trench 12 inches (300 mm) wider than duct on each side.
3. Width: Excavate trench 3 inches (75 mm) wider than duct on each side.

4. Depth: Install so top of duct envelope is at least 24 inches (600 mm) below finished grade in areas not subject to deliberate traffic, and at least 30 inches (750 mm) below finished grade in deliberate traffic paths for vehicles unless otherwise indicated.
5. Support duct on duct spacers coordinated with duct size, duct spacing, and outdoor temperature.
6. Spacer Installation: Place spacers close enough to prevent sagging and deforming of duct, with not less than four spacers per 20 feet (6 m) of duct. Place spacers within 24 inches (600 mm) of duct ends. Stagger spacers approximately 6 inches (150 mm) between tiers. Secure spacers to earth and to duct to prevent floating during concreting. Tie entire assembly together using fabric straps; do not use tie wires or reinforcing steel that may form conductive or magnetic loops around ducts or duct groups.
7. Minimum Space between Duct: 3 inches (75 mm) between edge of duct and exterior envelope wall, 2 inches (50 mm) between ducts for like services, and 4 inches (100 mm) between power and communications ducts.
8. Elbows: Use manufactured duct elbows for stub-ups, at building entrances, and at changes of direction in duct unless otherwise indicated. Extend encasement throughout length of elbow.
9. Elbows: Use manufactured GRC elbows for stub-ups, at building entrances, and at changes of direction in duct run.

    a. Couple RNC duct to GRC with adapters designed for this purpose, and encase coupling with 3 inches (75 mm) of concrete.
    b. Stub-ups to Outdoor Equipment: Extend concrete-encased GRC horizontally a minimum of 60 inches (1500 mm) from edge of base. Install insulated grounding bushings on terminations at equipment.

        1) Stub-ups shall be minimum 4 inches (100 mm)above finished floor and minimum 3 inches (75 mm)from conduit side to edge of slab.

    c. Stub-ups to Indoor Equipment: Extend concrete-encased GRC horizontally a minimum of 60 inches (1500 mm) from edge of wall. Install insulated grounding bushings on terminations at equipment.

        1) Stub-ups shall be minimum 4 inches (100 mm)above finished floor and no less than 3 inches (75 mm)from conduit side to edge of slab.

10. Reinforcement: Reinforce concrete-encased duct where crossing disturbed earth and where indicated. Arrange reinforcing rods and ties without forming conductive or magnetic loops around ducts or duct groups.
11. Forms: Use walls of trench to form side walls of duct bank where soil is self-supporting and concrete envelope can be poured without soil inclusions; otherwise, use forms.
12. Concrete Cover: Install a minimum of 3 inches (75 mm) of concrete cover between edge of duct to exterior envelope wall, 2 inches (50 mm) between duct of like services, and 4 inches (100 mm) between power and communications ducts.
13. Concreting Sequence: Pour each run of envelope between manholes or other terminations in one continuous operation.

    a. Start at one end and finish at the other, allowing for expansion and contraction of duct as its temperature changes during and after the pour. Use expansion fittings installed according to manufacturer's written instructions, or use other specific measures to prevent expansion-contraction damage.
    b. If more than one pour is necessary, terminate each pour in a vertical plane and install 3/4-inch (15-mm) reinforcing-rod dowels extending a minimum of 18 inches (450 mm) into concrete on both sides of joint near corners of envelope.

14. Pouring Concrete: Comply with requirements in "Concrete Placement" Article in Section 033000 "Cast-in-Place Concrete." Place concrete carefully during pours to prevent voids under and between duct and at exterior surface of envelope. Do not allow a heavy mass of concrete to fall directly onto ducts. Allow concrete to flow around duct and rise up in middle, uniformly filling all open spaces. Do not use power-driven agitating equipment unless specifically designed for duct-installation application.

M. Direct-Buried Duct and Duct Bank:

1. Excavate trench bottom to provide firm and uniform support for duct. Comply with requirements in Section 312000 "Earth Moving" for preparation of trench bottoms for pipes less than 6 inches (150 mm) in nominal diameter.
2. Width: Excavate trench 12 inches (300 mm) wider than duct on each side.
3. Width: Excavate trench 3 inches (75 mm) wider than duct on each side.
4. Depth: Install top of duct at least 36 inches (900 mm) below finished grade unless otherwise indicated.
5. Set elevation of bottom of duct bank below frost line.
6. Support ducts on duct spacers coordinated with duct size, duct spacing, and outdoor temperature.
7. Spacer Installation: Place spacers close enough to prevent sagging and deforming of duct, with not less than four spacers per 20 feet (6 m) of duct. Place spacers within 24 inches (600 mm) of duct ends. Stagger spacers approximately 6 inches (150 mm) between tiers. Secure spacers to earth and to ducts to prevent floating during concreting. Tie entire assembly together using fabric straps; do not use tie wires or reinforcing steel that may form conductive or magnetic loops around ducts or duct groups.
8. Install duct with a minimum of 3 inches (75 mm) between ducts for like services and 6 inches (150 mm) between power and communications duct.
9. Elbows: Install manufactured duct elbows for stub-ups, at building entrances, and at changes of direction in duct direction unless otherwise indicated. Encase elbows for stub-up ducts throughout length of elbow.
10. Install manufactured GRC elbows for stub-ups, at building entrances, and at changes of direction in duct.

    a. Couple RNC duct to GRC with adapters designed for this purpose, and encase coupling with 3 inches (75 mm) of concrete.
    b. Stub-ups to Outdoor Equipment: Extend concrete-encased GRC horizontally a minimum of 60 inches (1500 mm) from edge of base. Install insulated grounding bushings on terminations at equipment.

        1) Stub-ups shall be minimum 4 inches (100 mm)above finished floor and minimum 3 inches (75 mm)from conduit side to edge of slab.

    c. Stub-ups to Indoor Equipment: Extend concrete-encased GRC horizontally a minimum of 60 inches (1500 mm) from edge of wall. Install insulated grounding bushings on terminations at equipment.

        1) Stub-ups shall be minimum 4 inches (100 mm)above finished floor and no less than 3 inches (75 mm)from conduit side to edge of slab.

11. After installing first tier of duct, backfill and compact. Start at tie-in point and work toward end of duct run, leaving ducts at end of run free to move with expansion and contraction as temperature changes during this process. Repeat procedure after placing each tier. After placing last tier, hand place backfill to 4 inches (100 mm) over duct and hand tamp. Firmly tamp backfill around ducts to provide maximum supporting strength. Use hand tamper only. After placing controlled backfill over final tier, make final duct connections at

end of run and complete backfilling with normal compaction. Comply with requirements in Section 312000 "Earth Moving" for installation of backfill materials.

a. Place minimum 3 inches (75 mm) of sand as a bed for duct. Place sand to a minimum of 6 inches (150 mm) above top level of duct.
b. Place minimum 6 inches (150 mm) of engineered fill above concrete encasement of duct.

N. Warning Planks: Bury warning planks approximately 12 inches (300 mm) above direct-buried duct, placing them 24 inches (600 mm) o.c. Align planks along the width and along the centerline of duct or duct bank. Provide an additional plank for each 12-inch (300-mm) increment of duct-bank width over a nominal 18 inches (450 mm). Space additional planks 12 inches (300 mm) apart, horizontally.

O. Underground-Line Warning Tape: Bury conducting underground line specified in Section 260553 "Identification for Electrical Systems" no less than 12 inches (300 mm) above all concrete-encased duct and duct banks and approximately 12 inches (300 mm) below grade. Align tape parallel to and within 3 inches (75 mm) of centerline of duct bank. Provide an additional warning tape for each 12-inch (300-mm) increment of duct-bank width over a nominal 18 inches (450 mm). Space additional tapes 12 inches (300 mm) apart, horizontally.

3.6 INSTALLATION OF CONCRETE MANHOLES, HANDHOLES, AND BOXES

A. Cast-in-Place Manhole Installation:

1. Finish interior surfaces with a smooth-troweled finish.
2. Knockouts for Future Duct Connections: Form and pour concrete knockout panels 1-1/2 to 2 inches (38 to 50 mm) thick, arranged as indicated.
3. Comply with requirements in Section 033000 "Cast-in-Place Concrete" for cast-in-place concrete, formwork, and reinforcement.

B. Precast Concrete Handhole and Manhole Installation:

1. Comply with ASTM C891 unless otherwise indicated.
2. Install units level and plumb and with orientation and depth coordinated with connecting duct, to minimize bends and deflections required for proper entrances.
3. Unless otherwise indicated, support units on a level bed of crushed stone or gravel, graded from 1-inch (25-mm) sieve to No. 4 (4.75-mm) sieve and compacted to same density as adjacent undisturbed earth.

C. Elevations:

1. Manhole Roof: Install with rooftop at least 15 inches (375 mm) below finished grade.
2. Manhole Frame: In paved areas and trafficways, set frames flush with finished grade. Set other manhole frames 1 inch (25 mm) above finished grade.
3. Install handholes with bottom below frost line.
4. Handhole Covers: In paved areas and trafficways, set surface flush with finished grade. Set covers of other handholes 1 inch (25 mm) above finished grade.
5. Where indicated, cast handhole cover frame integrally with handhole structure.

D. Drainage: Install drains in bottom of manholes where indicated. Coordinate with drainage provisions indicated.

E. Manhole Access: Circular opening in manhole roof; sized to match cover size.

1. Manholes with Fixed Ladders: Offset access opening from manhole centerlines to align with ladder.
2. Install chimney, constructed of precast concrete collars and rings, to support cast-iron frame to connect cover with manhole roof opening. Provide moisture-tight masonry joints and waterproof grouting for frame to chimney.

F. Waterproofing: Apply waterproofing to exterior surfaces of manholes after concrete has cured at least three days. After duct has been connected and grouted, and before backfilling, waterproof joints and connections, and touch up abrasions and scars. Waterproof exterior of manhole chimneys after mortar has cured at least three days.

G. Dampproofing: Apply dampproofing to exterior surfaces of manholes after concrete has cured at least three days. Dampproofing materials and installation are specified in Section 071113 "Bituminous Dampproofing." After ducts are connected and grouted, and before backfilling, dampproof joints and connections, and touch up abrasions and scars. Dampproof exterior of manhole chimneys after mortar has cured at least three days.

H. Hardware: Install removable hardware, including pulling eyes, cable stanchions, and cable arms, and insulators, as required for installation and support of cables and conductors and as indicated.

I. Fixed Manhole Ladders: Arrange to provide for safe entry with maximum clearance from cables and other items in manholes.

J. Field-Installed Bolting Anchors in Manholes and Concrete Handholes: Do not drill deeper than 3-7/8 inches (97 mm) for manholes and 2 inches (50 mm) for handholes, for anchor bolts installed in the field. Use a minimum of two anchors for each cable stanchion.

3.7 INSTALLATION OF HANDHOLES AND BOXES OTHER THAN PRECAST CONCRETE

A. Install handholes and boxes level and plumb and with orientation and depth coordinated with connecting duct, to minimize bends and deflections required for proper entrances. Use box extension if required to match depths of duct, and seal joint between box and extension as recommended by manufacturer.

B. Unless otherwise indicated, support units on a level bed of crushed stone or gravel, graded from 1/2-inch (12.5-mm) sieve to No. 4 (4.75-mm) sieve and compacted to same density as adjacent undisturbed earth.

C. Elevation: In paved areas and trafficways, set cover flush with finished grade. Set covers of other handholes 1 inch (25 mm) above finished grade.

D. Install handholes and boxes with bottom below frost line.

E. Install removable hardware, including pulling eyes, cable stanchions, cable arms, and insulators, as required for installation and support of cables and conductors and as indicated. Select arm lengths to be long enough to provide spare space for future cables, but short enough to preserve adequate working clearances in enclosure.

F. Field cut openings for duct according to enclosure manufacturer's written instructions. Cut wall of enclosure with a tool designed for material to be cut. Size holes for terminating fittings to be used, and seal around penetrations after fittings are installed.

G. For enclosures installed in asphalt paving and subject to occasional, nondeliberate, heavy-vehicle loading, form and pour a concrete ring encircling, and in contact with, enclosure and with top surface screeded to top of box cover frame. Bottom of ring shall rest on compacted earth.

1. Concrete: 3000 psi (20 kPa), 28-day strength, complying with Section 033000 "Cast-in-Place Concrete," with a troweled finish.
2. Dimensions: 10 inches wide by 12 inches deep (250 mm wide by 300 mm deep).

3.8 GROUNDING

A. Ground underground ducts and utility structures according to Section 260526 "Grounding and Bonding for Electrical Systems."

3.9 FIELD QUALITY CONTROL

A. Perform the following tests and inspections:

1. Demonstrate capability and compliance with requirements on completion of installation of underground duct, duct bank, and utility structures.
2. Pull solid aluminum or wood test mandrel through duct to prove joint integrity and adequate bend radii, and test for out-of-round duct. Provide a minimum 12-inch- (300-mm-) long mandrel equal to duct size minus 1/4 inch (6 mm). If obstructions are indicated, remove obstructions and retest.
3. Test manhole grounding to ensure electrical continuity of grounding and bonding connections. Measure and report ground resistance as specified in Section 260526 "Grounding and Bonding for Electrical Systems."

B. Correct deficiencies and retest as specified above to demonstrate compliance.

C. Prepare test and inspection reports.

3.10 CLEANING

A. Pull leather-washer-type duct cleaner, with graduated washer sizes, through full length of duct until duct cleaner indicates that duct is clear of dirt and debris. Follow with rubber duct swab for final cleaning and to assist in spreading lubricant throughout ducts.

B. Clean internal surfaces of manholes, including sump.

1. Sweep floor, removing dirt and debris.
2. Remove foreign material.

END OF SECTION 260543

SECTION 260544 - SLEEVES AND SLEEVE SEALS FOR ELECTRICAL RACEWAYS AND CABLING

PART 1 - GENERAL

1.1 RELATED DOCUMENTS

A. Drawings and general provisions of the Contract, including General and Supplementary Conditions Specification Sections, apply to this Section.

1.2 SUMMARY

A. Section Includes:

1. Sleeves for raceway and cable penetration of non-fire-rated construction walls and floors.
2. Sleeve-seal systems.
3. Sleeve-seal fittings.
4. Grout.
5. Silicone sealants.

B. Related Requirements:

1. "Penetration Firestopping" for penetration firestopping installed in fire-resistance-rated walls, horizontal assemblies, and smoke barriers, with and without penetrating items.

1.3 ACTION SUBMITTALS

A. Product Data: For each type of product.

PART 2 - PRODUCTS

2.1 SLEEVES

A. Wall Sleeves:

1. Steel Pipe Sleeves: ASTM A 53/A 53M, Type E, Grade B, Schedule 40, zinc coated, plain ends.

B. Sleeves for Conduits Penetrating Non-Fire-Rated Gypsum Board Assemblies: Galvanized-steel sheet; 0.0239-inch minimum thickness; round tube closed with welded longitudinal joint, with tabs for screw-fastening the sleeve to the board.

C. PVC-Pipe Sleeves: ASTM D 1785, Schedule 40.

2.2 SLEEVE-SEAL SYSTEMS

A. Description: Modular sealing device, designed for field assembly, to fill annular space between sleeve and raceway or cable.

1. Manufacturers: Subject to compliance with requirements, provide products by one of the following:

    a. Advance Products & Systems, Inc.
    b. Metraflex Company (The).
    c. Pipeline Seal and Insulator, Inc.

2. Sealing Elements: EPDM rubber interlocking links shaped to fit surface of pipe. Include type and number required for pipe material and size of pipe.
3. Pressure Plates: Carbon steel.
4. Connecting Bolts and Nuts: Carbon steel, with corrosion-resistant coating, of length required to secure pressure plates to sealing elements.

2.3 SLEEVE-SEAL FITTINGS

A. Description: Manufactured plastic, sleeve-type, waterstop assembly made for embedding in concrete slab or wall. Unit shall have plastic or rubber waterstop collar with center opening to match piping OD.

1. Manufacturers: Subject to compliance with requirements, provide products by the following:

    a. Emerson
    b. Innerlynx, Eaton Crouse-Hinds, a Cooper Industries Company
    c. Link-Seal, GPT an EnPro Industries Company
    d. Metraflex

2.4 GROUT

A. Description: Nonshrink; recommended for interior and exterior sealing openings in non-fire-rated walls or floors.

B. Standard: ASTM C 1107/C 1107M, Grade B, post-hardening and volume-adjusting, dry, hydraulic-cement grout.

C. Design Mix: 5000-psi, 28-day compressive strength.

D. Packaging: Premixed and factory packaged.

2.5 SILICONE SEALANTS

A. Silicone Sealants: Single-component, silicone-based, neutral-curing elastomeric sealants of grade indicated below.

1. Grade: Pourable (self-leveling) formulation for openings in floors and other horizontal surfaces that are not fire rated.
2. Sealant shall have a VOC content of 50 g/L or less.

B. Silicone Foams: Multicomponent, silicone-based liquid elastomers that, when mixed, expand and cure in place to produce a flexible, nonshrinking foam.

PART 3 - EXECUTION

3.1 SLEEVE INSTALLATION FOR NON-FIRE-RATED ELECTRICAL PENETRATIONS

A. Comply with NECA 1.

B. Comply with NEMA VE 2 for cable tray and cable penetrations.

C. Sleeves for Conduits Penetrating Above-Grade Non-Fire-Rated Concrete and Masonry-Unit Floors and Walls:

1. Interior Penetrations of Non-Fire-Rated Walls and Floors:

   a. Seal annular space between sleeve and raceway or cable, using joint sealant appropriate for size, depth, and location of joint. Comply with requirements in Section 079200 "Joint Sealants."
   b. Seal space outside of sleeves with mortar or grout. Pack sealing material solidly between sleeve and wall so no voids remain. Tool exposed surfaces smooth; protect material while curing.

2. Use pipe sleeves unless penetration arrangement requires rectangular sleeved opening.
3. Size pipe sleeves to provide 1/4-inch annular clear space between sleeve and raceway or cable unless sleeve seal is to be installed.
4. Install sleeves for wall penetrations unless core-drilled holes or formed openings are used. Install sleeves during erection of walls. Cut sleeves to length for mounting flush with both surfaces of walls. Deburr after cutting.

D. Sleeves for Conduits Penetrating Non-Fire-Rated Gypsum Board Assemblies:

1. Use circular metal sleeves unless penetration arrangement requires rectangular sleeved opening.
2. Seal space outside of sleeves with approved joint compound for gypsum board assemblies.

E. Roof-Penetration Sleeves: Seal penetration of individual raceways and cables with flexible boot-type flashing units applied in coordination with roofing work.

F. Aboveground, Exterior-Wall Penetrations: Seal penetrations using steel pipe sleeves and mechanical sleeve seals. Select sleeve size to allow for 1-inch annular clear space between pipe and sleeve for installing mechanical sleeve seals.

G. Underground, Exterior-Wall and Floor Penetrations: Install cast-iron pipe sleeves. Size sleeves to allow for 1-inch annular clear space between raceway or cable and sleeve for installing sleeve-seal system.

3.2 SLEEVE-SEAL-SYSTEM INSTALLATION

A. Install sleeve-seal systems in sleeves in exterior concrete walls and slabs-on-grade at raceway entries into building.

B. Install type and number of sealing elements recommended by manufacturer for raceway or cable material and size. Position raceway or cable in center of sleeve. Assemble mechanical sleeve seals and install in annular space between raceway or cable and sleeve. Tighten bolts against pressure plates that cause sealing elements to expand and make watertight seal.

3.3 SLEEVE-SEAL-FITTING INSTALLATION

A. Install sleeve-seal fittings in new walls and slabs as they are constructed.

B. Assemble fitting components of length to be flush with both surfaces of concrete slabs and walls. Position waterstop flange to be centered in concrete slab or wall.

C. Secure nailing flanges to concrete forms.

D. Using grout, seal the space around outside of sleeve-seal fittings.

END OF SECTION 260544

SECTION 260553 - IDENTIFICATION FOR ELECTRICAL SYSTEMS

PART 1 - GENERAL

1.1 RELATED DOCUMENTS

A. Drawings and general provisions of the Contract, including General and Supplementary Conditions Specification Sections, apply to this Section.

1.2 SUMMARY

A. Section Includes:

1. Color and legend requirements for raceways, conductors, and warning labels and signs.
2. Labels.
3. Bands and tubes.
4. Tapes and stencils.
5. Tags.
6. Signs.
7. Cable ties.
8. Paint for identification.
9. Fasteners for labels and signs.

1.3 ACTION SUBMITTALS

A. Product Data: For each type of product.

B. Samples: For each type of label and sign to illustrate composition, size, colors, lettering style, mounting provisions, and graphic features of identification products.

C. Delegated-Design Submittal: For arc-flash hazard study.

PART 2 - PRODUCTS

2.1 PERFORMANCE REQUIREMENTS

A. Comply with ASME A13.1 and IEEE C2.

B. Comply with NFPA 70.

C. Comply with 29 CFR 1910.144 and 29 CFR 1910.145.

D. Comply with ANSI Z535.4 for safety signs and labels.

E. Comply with NFPA 70E and "Arc-Flash Hazard Analysis" requirements for arc-flash warning labels.

F. Adhesive-attached labeling materials, including label stocks, laminating adhesives, and inks used by label printers, shall comply with UL 969.

G. Thermal Movements: Allow for thermal movements from ambient and surface temperature changes.

1. Temperature Change: 120 deg F (67 deg C), ambient; 180 deg F (100 deg C), material surfaces.

2.2 COLOR AND LEGEND REQUIREMENTS

A. Raceways and Cables Carrying Circuits at 600 V or Less:

1. Black letters on a white field.
2. Legend: Indicate voltage and system or service type.

B. Color-Coding for Phase- Identification, 600 V or Less: Use colors listed below for ungrounded service, feeder and branch-circuit conductors.

1. Color shall be factory applied or field applied for sizes larger than No. 8 AWG if authorities having jurisdiction permit.
2. Colors for 208/120-V Circuits:

a. Phase A: Black.
b. Phase B: Red.
c. Phase C: Blue.

3. Color for Neutral: White.
4. Color for Equipment Grounds: Bare copper, Green, or Green with a yellow stripe.

C. Warning Label Colors:

1. Identify system voltage with black letters on an orange background.

D. Warning labels and signs shall include, but are not limited to, the following legends:

1. Multiple Power Source Warning: "DANGER - ELECTRICAL SHOCK HAZARD - EQUIPMENT HAS MULTIPLE POWER SOURCES."
2. Workspace Clearance Warning: "WARNING - OSHA REGULATION - AREA IN FRONT OF ELECTRICAL EQUIPMENT MUST BE KEPT CLEAR FOR 36 INCHES."

E. Equipment Identification Labels:

1. Normal Power: Black letters on a White field.

2. Emergency Power: White Letters on a Red field.

2.3 LABELS

A. Vinyl Wraparound Labels: Preprinted, flexible labels laminated with a clear, weather- and chemical-resistant coating and matching wraparound clear adhesive tape for securing label ends.

B. Snap-around Labels: Slit, pretensioned, flexible, preprinted, color-coded acrylic sleeves, with diameters sized to suit diameter and that stay in place by gripping action.

C. Self-Adhesive Wraparound Labels: Preprinted, 3-mil thick, vinyl flexible label with acrylic pressure-sensitive adhesive.

1. Self-Lamination: Clear; UV-, weather- and chemical-resistant; self-laminating, protective shield over the legend. Labels sized such that the clear shield overlaps the entire printed legend.
2. Marker for Labels: Machine-printed, permanent, waterproof, black ink recommended by printer manufacturer.

D. Self-Adhesive Labels: Vinyl, thermal, transfer-printed, 3.5-mil thick, multicolor, weather- and UV-resistant, pressure-sensitive adhesive labels, configured for intended use and location.
1. Minimum Nominal Size:

a. 1-1/2 by 6 inches for raceway and conductors.
b. 3-1/2 by 5 inches for equipment.
c. As required by authorities having jurisdiction.

2.4 BANDS AND TUBES

A. Snap-around, Color-Coding Bands: Slit, pretensioned, flexible, solid-colored acrylic sleeves, 2 inches long, with diameters sized to suit diameter and that stay in place by gripping action.

B. Heat-Shrink Preprinted Tubes: Flame-retardant polyolefin tubes with machine-printed identification labels, sized to suit diameters of and shrunk to fit firmly around item being identified. Full shrink recovery occurs at a maximum of 200 deg F. Comply with UL 224.

2.5 TAPES AND STENCILS

A. Marker Tapes: Vinyl or vinyl-cloth, self-adhesive wraparound type, with circuit identification legend machine printed by thermal transfer or equivalent process.

B. Self-Adhesive Vinyl Tape: Colored, heavy duty, waterproof, fade resistant; not less than 3 mils thick by 1 to 2 inches wide; compounded for outdoor use.

C. Tape and Stencil: 4-inch- wide black stripes on 10-inch centers placed diagonally over orange background and is 12 inches wide. Stop stripes at legends.

D. Floor Marking Tape: 2-inch- wide, 5-mil pressure-sensitive vinyl tape, with yellow and black stripes and clear vinyl overlay.

E. Underground-Line Warning Tape:

1. Tape:

a. Recommended by manufacturer for the method of installation and suitable to identify and locate underground electrical and communications lines.
b. Printing on tape shall be permanent and shall not be damaged by burial operations.
c. Tape material and ink shall be chemically inert and not subject to degradation when exposed to acids, alkalis, and other destructive substances commonly found in soils.

2. Color and Printing:

   a. Comply with ANSI Z535.1, ANSI Z535.2, ANSI Z535.3, ANSI Z535.4, and ANSI Z535.5.
   b. Inscriptions for Red-Colored Tapes: "ELECTRIC LINE, HIGH VOLTAGE"
   c. Inscriptions for Orange-Colored Tapes: "TELEPHONE CABLE, CATV CABLE, COMMUNICATIONS CABLE, OPTICAL FIBER CABLE".

3. Description:

   a. Detectable three-layer laminate, consisting of a printed pigmented polyolefin film, a solid aluminum-foil core, and a clear protective film that allows inspection of the continuity of the conductive core; bright colored, compounded for direct-burial service.
   b. Width: 3 inches.
   c. Overall Thickness: 5 mils.
   d. Foil Core Thickness: 0.35 mil.
   e. Weight: 28 lb/1000 sq. ft.
   f. Tensile according to ASTM D882: 70 lbf and 4600 psi.

F. Stenciled Legend: In nonfading, waterproof, black ink, or paint. Minimum letter height shall be 1 inch.

2.6 SIGNS

A. Baked-Enamel Signs:
   1. Preprinted aluminum signs, high-intensity reflective, punched or drilled for fasteners, with colors, legend, and size required for application.
   2. 1/4-inch grommets in corners for mounting.
   3. Nominal Size: 7 by 10 inches.

B. Metal-Backed Butyrate Signs:
   1. Weather-resistant, nonfading, preprinted, cellulose-acetate butyrate signs, with 0.0396-inch galvanized-steel backing, punched and drilled for fasteners, and with colors, legend, and size required for application.
   2. 1/4-inch grommets in corners for mounting.
   3. Nominal Size: 10 by 14 inches.

C. Laminated Acrylic or Melamine Plastic Signs:
   1. Engraved legend.
   2. Thickness:

      a. For signs up to 20 sq. in., minimum 1/16 inch thick.
      b. For signs larger than 20 sq. in., 1/8 inch thick.
      c. Engraved legend with black letters on white face
      d. Punched or drilled for mechanical fasteners with 1/4-inch grommets in corners for mounting.
      e. Framed with mitered acrylic molding and arranged for attachment at applicable equipment.

2.7 CABLE TIES

A. General-Purpose Cable Ties: Fungus inert, self-extinguishing, one piece, self-locking, and Type 6/6 nylon.

1. Minimum Width: 3/16 inch (5 mm).
2. Tensile Strength at 73 Deg F (23 Deg C) according to ASTM D638: 12,000 psi (82.7 MPa).
3. Temperature Range: Minus 40 to plus 185 deg F (Minus 40 to plus 85 deg C).
4. Color: Black, except where used for color-coding.

B. UV-Stabilized Cable Ties: Fungus inert, designed for continuous exposure to exterior sunlight, self-extinguishing, one piece, self-locking, and Type 6/6 nylon.

1. Minimum Width: 3/16 inch (5 mm).
2. Tensile Strength at 73 Deg F (23 Deg C) according to ASTM D638: 12,000 psi (82.7 MPa).
3. Temperature Range: Minus 40 to plus 185 deg F (Minus 40 to plus 85 deg C).
4. Color: Black.

C. Plenum-Rated Cable Ties: Self-extinguishing, UV stabilized, one piece, and self-locking.

1. Minimum Width: 3/16 inch (5 mm).
2. Tensile Strength at 73 Deg F (23 Deg C) according to ASTM D638: 7000 psi (48.2 MPa).
3. UL 94 Flame Rating: 94V-0.
4. Temperature Range: Minus 50 to plus 284 deg F (Minus 46 to plus 140 deg C).
5. Color: Black.

2.8 MISCELLANEOUS IDENTIFICATION PRODUCTS

A. Paint: Comply with requirements in painting Sections for paint materials and application requirements. Retain paint system applicable for surface material and location (exterior or interior).

B. Fasteners for Labels and Signs: Self-tapping, stainless-steel screws or stainless-steel machine screws with nuts and flat and lock washers.

PART 3 - EXECUTION

3.1 INSTALLATION

A. Equipment to Be Labeled:

a. Panelboards, electrical cabinets, and enclosures.
b. Electrical switchgear and switchboards.
c. Disconnect switches.
d. Enclosed circuit breakers.
e. Motor starters.
f. Push-button stations.
g. Power transfer equipment.
h. Contactors.
i. Receptacles: Provide panel and circuit designation.

B. Verify and coordinate identification names, abbreviations, colors, and other features with requirements in other Sections requiring identification applications, Drawings, Shop Drawings, manufacturer's wiring diagrams, and operation and maintenance manual. Use consistent designations throughout Project.

C. Install identifying devices before installing acoustical ceilings and similar concealment.

D. Verify identity of each item before installing identification products.

E. Coordinate identification with Project Drawings, manufacturer's wiring diagrams, and operation and maintenance manual.

F. Apply identification devices to surfaces that require finish after completing finish work.

G. Install signs with approved legend to facilitate proper identification, operation, and maintenance of electrical systems and connected items.

H. Self-Adhesive Identification Products: Before applying electrical identification products, clean substrates of substances that could impair bond, using materials and methods recommended by manufacturer of identification product.

I. System Identification for Raceways and Cables under 600 V: Identification shall completely encircle cable or conduit. Place identification of two-color markings in contact, side by side.

1. Secure tight to surface of conductor, cable, or raceway.

J. System Identification for Raceways and Cables over 600 V: Identification shall completely encircle cable or conduit. Place adjacent identification of two-color markings in contact, side by side.

1. Secure tight to surface of conductor, cable, or raceway.

K. Auxiliary Electrical Systems Conductor Identification: Identify field-installed alarm, control, and signal connections.

L. Emergency Operating Instruction Signs: Install instruction signs with white legend on a red background with minimum 3/8-inch- (10-mm-) high letters for emergency instructions at equipment used for power transfer and/or any emergency operations.

M. Elevated Components: Increase sizes of labels, signs, and letters to those appropriate for viewing from the floor.

N. Accessible Fittings for Raceways: Identify the covers of each junction and pull box of the following systems with the wiring system legend and system voltage. System legends shall be as follows:

1. "EMERGENCY POWER"
2. "POWER"
3. "UPS"
4. “LIFE SAFETY”

O. Vinyl Wraparound Labels:

1. Secure tight to surface at a location with high visibility and accessibility.
2. Attach labels that are not self-adhesive type with clear vinyl tape, with adhesive appropriate to the location and substrate.

P. Snap-around Labels: Secure tight to surface at a location with high visibility and accessibility.

Q. Self-Adhesive Wraparound Labels: Secure tight to surface of raceway or cable at a location with high visibility and accessibility.

R. Self-Adhesive Labels:

1. On each unit of equipment, install unique designation label that is consistent with wiring diagrams, schedules, and operation and maintenance manual.
2. Unless otherwise indicated, provide a single line of text with 1/2-inch- (13-mm-) high letters on 1-1/2-inch- (38-mm-) high label; where two lines of text are required, use labels 2 inches (50 mm) high.

S. Snap-around Color-Coding Bands: Secure tight to surface at a location with high visibility and accessibility.

T. Heat-Shrink, Preprinted Tubes: Secure tight to surface at a location with high visibility and accessibility.

U. Marker Tapes: Secure tight to surface at a location with high visibility and accessibility.

V. Self-Adhesive Vinyl Tape: Secure tight to surface at a location with high visibility and accessibility.

1. Field-Applied, Color-Coding Conductor Tape: Apply in half-lapped turns for a minimum distance of 6 inches (150 mm) where splices or taps are made. Apply last two turns of tape with no tension to prevent possible unwinding.

W. Tape and Stencil: Comply with requirements in painting Sections for surface preparation and paint application.

X. Floor Marking Tape: Apply stripes to finished surfaces following manufacturer's written instructions.

Y. Underground Line Warning Tape:

1. During backfilling of trenches, install continuous underground-line warning tape directly above cable or raceway at 6 to 8 inches (150 to 200 mm) below finished grade. Use multiple tapes where width of multiple lines installed in a common trench or concrete envelope exceeds 16 inches (400 mm) overall.
2. Install underground-line warning tape for direct-buried cables and cables in raceways.

Z. Write-on Tags:

1. Place in a location with high visibility and accessibility.

AA. Baked-Enamel Signs:

1. Attach signs that are not self-adhesive type with mechanical fasteners appropriate to the location and substrate.
2. Unless otherwise indicated, provide a single line of text with 1/2-inch- (13-mm-) high letters on minimum 1-1/2-inch- (38-mm-) high sign; where two lines of text are required, use signs minimum 2 inches (50 mm) high.

BB. Metal-Backed Butyrate Signs:

1. Attach signs that are not self-adhesive type with mechanical fasteners appropriate to the location and substrate.
2. Unless otherwise indicated, provide a single line of text with 1/2-inch- (13-mm-) high letters on minimum 1-1/2-inch- (38-mm-) high sign; where two lines of text are required, use signs minimum 2 inches (50 mm) high.

CC. Laminated Acrylic or Melamine Plastic Signs:

1. Attach signs and plastic labels that are not self-adhesive type with mechanical fasteners appropriate to the location and substrate.
2. Unless otherwise indicated, provide a single line of text with 1/2-inch- (13-mm-) high letters on minimum 1-1/2-inch- (38-mm-) high sign; where two lines of text are required, use signs minimum 2 inches (50 mm) high.

DD. Cable Ties: General purpose, for attaching tags, except as listed below:

1. Outdoors: UV-stabilized nylon.
2. In Spaces Handling Environmental Air: Plenum rated.

3.2 IDENTIFICATION SCHEDULE

A. Install identification materials and devices at locations for most convenient viewing without interference with operation and maintenance of equipment. Install access doors or panels to provide view of identifying devices.

B. Identify conductors, cables, and terminals in enclosures and at junctions, terminals, pull points, and locations of high visibility. Identify by system and circuit designation.

C. Accessible Raceways and Metal-Clad Cables, 600 V or Less, for Service, Feeder, and Branch Circuits, More Than 30 A and 120 V to Ground: Identify with self-adhesive raceway labels.

1. Locate identification at changes in direction, at penetrations of walls and floors, at 50-foot (15-m) maximum intervals in straight runs, and at 25-foot (7.6-m) maximum intervals in congested areas.

D. Accessible Fittings for Raceways and Cables within Buildings: Identify the covers of each junction and pull box of the following systems with self-adhesive labels containing the wiring system legend and system voltage. System legends shall be as follows:

1. "EMERGENCY POWER"
2. "POWER"
3. "UPS"
4. “LIFE SAFETY”

E. Power-Circuit Conductor Identification, 600 V or Less: For conductors in vaults, pull and junction boxes, manholes, and handholes, use self-adhesive wraparound labels to identify the phase.

1. Locate identification at changes in direction, at penetrations of walls and floors, at 50-foot (15-m) maximum intervals in straight runs, and at 25-foot (7.6-m) maximum intervals in congested areas.

F. Control-Circuit Conductor Identification: For conductors and cables in pull and junction boxes, manholes, and handholes, use write-on tags self-adhesive wraparound labels with the conductor or cable designation, origin, and destination.

G. Control-Circuit Conductor Termination Identification: For identification at terminations, provide heat-shrink preprinted tubes with the conductor designation.

H. Auxiliary Electrical Systems Conductor Identification: Self-adhesive vinyl tape that is uniform and consistent with system used by manufacturer for factory-installed connections.

1. Identify conductors, cables, and terminals in enclosures and at junctions, terminals, and pull points. Identify by system and circuit designation.

I. Locations of Underground Lines: Underground-line warning tape for power, lighting, communication, and control wiring and optical-fiber cable.

J. Workspace Indication: Apply floor marking tape and stencil] to finished surfaces. Show working clearances in the direction of access to live parts. Workspace shall comply with NFPA 70 and 29 CFR 1926.403 unless otherwise indicated. Do not install at flush-mounted panelboards and similar equipment in finished spaces.

K. Instructional Signs: Self-adhesive labels, including the color code for grounded and ungrounded conductors.

L. Warning Labels for Indoor Cabinets, Boxes, and Enclosures for Power and Lighting: Baked-enamel warning signs.

1. Apply to exterior of door, cover, or other access.
2. For equipment with multiple power or control sources, apply to door or cover of equipment, including, but not limited to, the following:

a. Power-transfer switches.
b. Controls with external control power connections.

M. Arc Flash Warning Labeling: Self-adhesive labels.

N. Operating Instruction Signs: Laminated acrylic or melamine plastic signs.

O. Emergency Operating Instruction Signs: Laminated acrylic or melamine plastic signs with white legend on a red background with minimum 3/8-inch- (10-mm-) high letters for emergency instructions at equipment used for power transfer and other emergency operations.

P. Equipment Identification Labels:

1. Indoor Equipment: Laminated acrylic or melamine plastic sign.
2. Outdoor Equipment: Laminated acrylic or melamine sign.

END OF SECTION 260553

THIS PAGE LEFT INTENTIONALLY BLANK

SECTION 260573.13 - SHORT-CIRCUIT STUDIES

PART 1 - GENERAL

1.1 RELATED DOCUMENTS

A. Drawings and general provisions of the Contract, including General and Supplementary Conditions Specification Sections, apply to this Section.

1.2 SUMMARY

A. Section includes a computer-based, fault-current study to determine the minimum interrupting capacity of circuit protective devices.

1.3 ACTION SUBMITTALS

A. Product Data:

1. For computer software program to be used for studies.
2. Submit the following after the approval of system protective devices submittals. Submittals may be in digital form.

    a. Short-circuit study input data, including completed computer program input data sheets.
    b. Short-circuit study and equipment evaluation report; signed, dated, and sealed by a qualified professional engineer.

        1) Submit study report for action prior to receiving final approval of distribution equipment submittals. If formal completion of studies will cause delay in equipment manufacturing, obtain approval from Architect for preliminary submittal of sufficient study data to ensure that selection of devices and associated characteristics is satisfactory.
        2) Revised one-line diagram, reflecting field investigation results and results of short-circuit study.

1.4 DEFINITIONS

A. Existing to Remain: Existing items of construction that are not to be removed and that are not otherwise indicated to be removed and salvaged, or removed and reinstalled. Existing to remain items shall remain functional throughout the construction period.

B. Field Adjusting Agency: An independent electrical testing agency with full-time employees and the capability to adjust devices and conduct testing indicated and that is a member company of NETA.

C. One-Line Diagram: A diagram that shows, by means of single lines and graphic symbols, the course of an electric circuit or system of circuits and the component devices or parts used therein.

D. Power System Analysis Software Developer: An entity that commercially develops, maintains, and distributes computer software used for power system studies.

E. Power Systems Analysis Specialist: Professional engineer in charge of performing the study and documenting recommendations, licensed in the state where Project is located.

F. Protective Device: A device that senses when an abnormal current flow exists and then removes the affected portion of the circuit from the system.

G. SCCR: Short-circuit current rating.

H. Service: The conductors and equipment for delivering electric energy from the serving utility to the wiring system of the premises served.

I. Single-Line Diagram: See "One-Line Diagram."

1.5 QUALITY ASSURANCE

A. Study shall be performed using commercially developed and distributed software designed specifically for power system analysis.

B. Software algorithms shall comply with requirements of standards and guides specified in this Section.

C. Manual calculations are unacceptable.

1. Power System Analysis Software Qualifications: Computer program shall be designed to perform short-circuit studies or have a function, component, or add-on module designed to perform short-circuit studies.
2. Computer program shall be developed under the charge of a licensed professional engineer who holds IEEE Computer Society's Certified Software Development Professional certification.

PART 2 - PRODUCTS

2.1 POWER SYSTEM ANALYSIS SOFTWARE DEVELOPERS

A. Manufacturers: Subject to compliance with requirements, provide products by one of the following:

1. EasyPower.
2. SKM Systems Analysis, Inc.

B. Comply with IEEE 399 and IEEE 551.

1. Analytical features of power systems analysis software program shall have capability to calculate "mandatory," "very desirable," and "desirable" features as listed in IEEE 399.

C. Computer software program shall be capable of plotting and diagramming time-current-characteristic curves as part of its output.

2.2 SHORT-CIRCUIT STUDY REPORT CONTENTS

A. Executive summary of study findings.

B. Study descriptions, purpose, basis, and scope. Include case descriptions, definition of terms, and guide for interpretation of results.

C. One-line diagram of modeled power system, showing the following:

1. Protective device designations and ampere ratings.
2. Conductor types, sizes, and lengths.
3. Transformer kilovolt ampere (kVA) and voltage ratings.
4. Motor and generator designations and kVA ratings.
5. Switchgear, switchboard, motor-control center, and panelboard designations and ratings.
6. Derating factors and environmental conditions.
7. Any revisions to electrical equipment required by the study.

D. Comments and recommendations for system improvements or revisions in a written document, separate from one-line diagram.

E. Protective Device Evaluation:

1. Evaluate equipment and protective devices and compare to available short-circuit currents. Verify that equipment withstand ratings exceed available short-circuit current at equipment installation locations.
2. Tabulations of circuit breaker, fuse, and other protective device ratings versus calculated short-circuit duties.
3. For 600-V overcurrent protective devices, ensure that interrupting ratings are equal to or higher than calculated 1/2-cycle symmetrical fault current.
4. For devices and equipment rated for asymmetrical fault current, apply multiplication factors listed in standards to 1/2-cycle symmetrical fault current.
5. Verify adequacy of phase conductors at maximum three-phase bolted fault currents; verify adequacy of equipment grounding conductors and grounding electrode conductors at maximum ground-fault currents. Ensure that short-circuit withstand ratings are equal to or higher than calculated 1/2-cycle symmetrical fault current.

F. Short-Circuit Study Input Data:

1. One-line diagram of system being studied.
2. Power sources available.
3. Manufacturer, model, and interrupting rating of protective devices.
4. Conductors.
5. Transformer data.

G. Short-Circuit Study Output Reports:

1. Interrupting Duty Report: Three-phase and unbalanced fault calculations, showing the following for each overcurrent device location:

a. Voltage.
b. Calculated symmetrical fault-current magnitude and angle.
c. Fault-point X/R ratio.
d. No AC Decrement (NACD) ratio.
e. Equivalent impedance.

f. Multiplying factors for 2-, 3-, 5-, and 8-cycle circuit breakers rated on a symmetrical basis.
g. Multiplying factors for 2-, 3-, 5-, and 8-cycle circuit breakers rated on a total basis.

PART 3 - EXECUTION

3.1 POWER SYSTEM DATA

A. Obtain all data necessary for conduct of the study.

1. Verify completeness of data supplied on one-line diagram. Call any discrepancies to Architect's attention.
2. For equipment included as Work of this Project, use characteristics submitted under provisions of action submittals and information submittals for this Project.
3. For relocated equipment and that which is existing to remain, obtain required electrical distribution system data by field investigation and surveys, conducted by qualified technicians and engineers. Qualifications of technicians and engineers shall be as defined by NFPA 70E.

B. Gather and tabulate the required input data to support the short-circuit study. Comply with requirements in Section 017839 "Project Record Documents" for recording circuit protective device characteristics. Record data on a Record Document copy of one-line diagram. Comply with recommendations in IEEE 551 as to the amount of detail that is required to be acquired in the field. Field data gathering shall be under direct supervision and control of the engineer in charge of performing the study, and shall be by the engineer or its representative who holds NETA ETT-Certified Technician Level III or NICET Electrical Power Testing Level III certification. Data include, but are not limited to, the following:

1. Product Data for Project's overcurrent protective devices involved in overcurrent protective device coordination studies. Use equipment designation tags that are consistent with electrical distribution system diagrams, overcurrent protective device submittals, input and output data, and recommended device settings.
2. Obtain electrical power utility impedance at the service.
3. Power sources and ties.
4. For transformers, include kVA, primary and secondary voltages, connection type, impedance, X/R ratio, taps measured in percent, and phase shift.
5. For reactors, provide manufacturer and model designation, voltage rating, and impedance.
6. For circuit breakers and fuses, provide manufacturer and model designation. List type of breaker, type of trip, SCCR, current rating, and breaker settings.
7. Generator short-circuit current contribution data, including short-circuit reactance, rated kVA, rated voltage, and X/R ratio.
8. Busway manufacturer and model designation, current rating, impedance, lengths, and conductor material.
9. Motor horsepower and NEMA MG 1 code letter designation.
10. Conductor sizes, lengths, number, conductor material and conduit material (magnetic or nonmagnetic).
11. Derating factors.

3.2 SHORT-CIRCUIT STUDY

A. Perform study following the general study procedures contained in IEEE 399.

B. Calculate short-circuit currents according to IEEE 551.

C. Base study on device characteristics supplied by device manufacturer.

D. Extent of electrical power system to be studied is indicated on Drawings.

E. Begin short-circuit current analysis at the service, extending down to system overcurrent protective devices as follows:

1. To normal system low-voltage load buses where fault current is 10 kA or less.
2. Exclude equipment rated 240 V ac or less when supplied by a single transformer rated less than 125 kVA.

F. Study electrical distribution system from normal and alternate power sources throughout electrical distribution system for Project. Study all cases of system-switching configurations and alternate operations that could result in maximum fault conditions.

G. Include the ac fault-current decay from induction motors, synchronous motors, and asynchronous generators and apply to low- and medium-voltage, three-phase ac systems. Also account for the fault-current dc decrement to address asymmetrical requirements of interrupting equipment.

H. Calculate short-circuit momentary and interrupting duties for a three-phase bolted fault and a single line-to-ground fault at each equipment indicated on one-line diagram.

1. For grounded systems, provide a bolted line-to-ground fault-current study for areas as defined for the three-phase bolted fault short-circuit study.

I. Include in the report identification of any protective device applied outside its capacity.

END OF SECTION 260573.13

THIS PAGE LEFT INTENTIONALLY BLANK

SECTION 260573.16 - COORDINATION STUDIES

PART 1 - GENERAL

1.1 RELATED DOCUMENTS

A. Drawings and general provisions of the Contract, including General and Supplementary Conditions and Division 01 Specification Sections, apply to this Section.

1.2 SUMMARY

A. Section includes computer-based, overcurrent protective device coordination studies to determine overcurrent protective devices and to determine overcurrent protective device settings for selective tripping.

1. Study results shall be used to determine coordination of series-rated devices.

1.3 DEFINITIONS

A. Existing to Remain: Existing items of construction that are not to be removed and that are not otherwise indicated to be removed, removed and salvaged, or removed and reinstalled. Existing to remain items shall remain functional throughout the construction period.

B. Field Adjusting Agency: An independent electrical testing agency with full-time employees and the capability to adjust devices and conduct testing indicated and that is a member company of NETA.

C. One-Line Diagram: A diagram that shows, by means of single lines and graphic symbols, the course of an electric circuit or system of circuits and the component devices or parts used therein.

D. Power System Analysis Software Developer: An entity that commercially develops, maintains, and distributes computer software used for power system studies.

E. Power System Analysis Specialist: Professional engineer in charge of performing the study and documenting recommendations, licensed in the state where Project is located.

F. Protective Device: A device that senses when an abnormal current flow exists and then removes the affected portion of the circuit from the system.

G. SCCR: Short-circuit current rating.

H. Service: The conductors and equipment for delivering electric energy from the serving utility to the wiring system of the premises served.

I. Single-Line Diagram: See "One-Line Diagram."

1.4 ACTION SUBMITTALS

A. Product Data:

1. For computer software program to be used for studies.
2. Submit the following after the approval of system protective devices submittals. Submittals shall be in digital form.

    a. Coordination-study input data, including completed computer program input data sheets.
    b. Study and equipment evaluation reports.

3. Overcurrent protective device coordination study report; signed, dated, and sealed by a qualified professional engineer.

    a. Submit study report for action prior to receiving final approval of distribution equipment submittals. If formal completion of studies will cause delay in equipment manufacturing, obtain approval from Architect for preliminary submittal of sufficient study data to ensure that selection of devices and associated characteristics is satisfactory.

1.5 QUALITY ASSURANCE

A. Studies shall be performed using commercially developed and distributed software designed specifically for power system analysis.

B. Software algorithms shall comply with requirements of standards and guides specified in this Section.

C. Manual calculations are unacceptable.

D. Power System Analysis Software Qualifications:

1. Computer program shall be designed to perform coordination studies or have a function, component, or add-on module designed to perform coordination studies.
2. Computer program shall be developed under the charge of a licensed professional engineer who holds IEEE Computer Society's Certified Software Development Professional certification.

E. Power Systems Analysis Specialist Qualifications: Professional engineer licensed in the state where Project is located. All elements of the study shall be performed under the direct supervision and control of this professional engineer.

F. Field Adjusting Agency Qualifications:

1. Employer of a NETA ETT-Certified Technician Level III responsible for all field adjusting of the Work.
2. A member company of NETA.
3. Acceptable to authorities having jurisdiction.

PART 2 - PRODUCTS

2.1 POWER SYSTEM ANALYSIS SOFTWARE DEVELOPERS

A. Manufacturers: Subject to compliance with requirements, provide products by one of the following:

1. EasyPower.
2. SKM Systems Analysis, Inc.

B. Comply with IEEE 242 and IEEE 399.

C. Computer software program shall be capable of plotting and diagramming time-current-characteristic curves as part of its output. Computer software program shall report device settings and ratings of all overcurrent protective devices and shall demonstrate selective coordination by computer-generated, time-current coordination plots.

1. Optional Features:

a. Arcing faults.

2.2 COORDINATION STUDY REPORT CONTENTS

A. Executive summary of study findings.

B. Study descriptions, purpose, basis, and scope. Include case descriptions, definition of terms, and guide for interpretation of results.

C. One-line diagram of modeled power system, showing the following:

1. Protective device designations and ampere ratings.
2. Conductor types, sizes, and lengths.
3. Transformer kilovolt ampere (kVA) and voltage ratings.
4. Motor and generator designations and kVA ratings.
5. Switchgear, switchboard, motor-control center, and panelboard designations.
6. Any revisions to electrical equipment required by the study.
7. Study Input Data: As described in "Power System Data" Article.

a. Short-Circuit Study Output: As specified in "Short-Circuit Study Output Reports" Paragraph in "Short-Circuit Study Report Contents" Article in Section 260573.13 "Short-Circuit Studies."

D. Protective Device Coordination Study:

1. Report recommended settings of protective devices, ready to be applied in the field. Use manufacturer's data sheets for recording the recommended setting of overcurrent protective devices when available.

a. Phase and Ground Relays:
1) Device tag.
2) Relay current transformer ratio and tap, time dial, and instantaneous pickup value.
3) Recommendations on improved relaying systems, if applicable.

b. Circuit Breakers:
   1) Adjustable pickups and time delays (long time, short time, and ground).
   2) Adjustable time-current characteristic.
   3) Adjustable instantaneous pickup.
   4) Recommendations on improved trip systems, if applicable.
c. Fuses: Show current rating, voltage, and class.

E. Time-Current Coordination Curves: Determine settings of overcurrent protective devices to achieve selective coordination. Graphically illustrate that adequate time separation exists between devices installed in series, including power utility company's upstream devices. Prepare separate sets of curves for the switching schemes and for emergency periods where the power source is local generation. Show the following information:

1. Device tag and title, one-line diagram with legend identifying the portion of the system covered.
2. Terminate device characteristic curves at a point reflecting maximum symmetrical or asymmetrical fault current to which the device is exposed.
3. Identify the device associated with each curve by manufacturer type, function, and, if applicable, tap, time delay, and instantaneous settings recommended.
4. Plot the following listed characteristic curves, as applicable:

   a. Power utility's overcurrent protective device.
   b. Medium-voltage equipment overcurrent relays.
   c. Medium- and low-voltage fuses including manufacturer's minimum melt, total clearing, tolerance, and damage bands.
   d. Low-voltage equipment circuit-breaker trip devices, including manufacturer's tolerance bands.
   e. Transformer full-load current, magnetizing inrush current, and ANSI through-fault protection curves.
   f. Cables and conductors damage curves.
   g. Ground-fault protective devices.
   h. Motor-starting characteristics and motor damage points.
   i. Generator short-circuit decrement curve and generator damage point.
   j. The largest feeder circuit breaker in each motor-control center and panelboard.

5. Maintain selectivity for tripping currents caused by overloads.
6. Maintain maximum achievable selectivity for tripping currents caused by overloads on series-rated devices.
7. Provide adequate time margins between device characteristics such that selective operation is achieved.
8. Comments and recommendations for system improvements.

PART 3 - EXECUTION

3.1 EXAMINATION

A. Examine Project overcurrent protective device submittals for compliance with electrical distribution system coordination requirements and other conditions affecting performance of the Work. Devices to be coordinated are indicated on Drawings.

1. Proceed with coordination study only after relevant equipment submittals have been assembled. Overcurrent protective devices that have not been submitted and approved prior to coordination study may not be used in study.

3.2 POWER SYSTEM DATA

A. Obtain all data necessary for conduct of the overcurrent protective device study.

1. Verify completeness of data supplied in one-line diagram on Drawings. Call any discrepancies to Architect's attention.
2. For equipment included as Work of this Project, use characteristics submitted under provisions of action submittals and information submittals for this Project.
3. For relocated equipment and that which is existing to remain, obtain required electrical distribution system data by field investigation and surveys, conducted by qualified technicians and engineers. Qualifications of technicians and engineers shall be as defined by NFPA 70E.

B. Gather and tabulate all required input data to support the coordination study. List below is a guide. Comply with recommendations in IEEE 551 for the amount of detail required to be acquired in the field. Field data gathering shall be under direct supervision and control of the engineer in charge of performing the study, and shall be by the engineer or its representative who holds NETA ETT-Certified Technician Level III or NICET Electrical Power Testing Level III certification. Data include, but are not limited to, the following:

1. Product Data for overcurrent protective devices specified in other Sections and involved in overcurrent protective device coordination studies. Use equipment designation tags that are consistent with electrical distribution system diagrams, overcurrent protective device submittals, input and output data, and recommended device settings.
2. Electrical power utility impedance at the service.
3. Power sources and ties.
4. Short-circuit current at each system bus (three phase and line to ground).
5. Voltage level at each bus.
6. For transformers, include kVA, primary and secondary voltages, connection type, impedance, X/R ratio, taps measured in percent, and phase shift.
7. For circuit breakers and fuses, provide manufacturer and model designation. List type of breaker, type of trip and available range of settings, SCCR, current rating, and breaker settings.
8. Generator short-circuit current contribution data, including short-circuit reactance, rated kVA, rated voltage, and X/R ratio.
9. For relays, provide manufacturer and model designation, current transformer ratios, potential transformer ratios, and relay settings.
10. Busway manufacturer and model designation, current rating, impedance, lengths, size, and conductor material.
11. Motor horsepower and NEMA MG 1 code letter designation.
12. Low-voltage cable sizes, lengths, number, conductor material, and conduit material (magnetic or nonmagnetic).
13. Medium-voltage cable sizes, lengths, conductor material, cable construction, metallic shield performance parameters, and conduit material (magnetic or nonmagnetic).

3.3 COORDINATION STUDY

A. Comply with IEEE 242 for calculating short-circuit currents and determining coordination time intervals.

B. Comply with IEEE 399 for general study procedures.

C. Base study on device characteristics supplied by device manufacturer.

D. Extent of electrical power system to be studied is indicated on Drawings.

E. Begin analysis at the service, extending down to system overcurrent protective devices as follows:

1. To normal system low-voltage load buses where fault current is 10 kA or less.
2. Exclude equipment rated 240 V ac or less when supplied by a single transformer rated less than 125 kVA.

F. Study electrical distribution system from normal and alternate power sources throughout electrical distribution system for Project. Study all cases of system-switching configurations and alternate operations that could result in maximum fault conditions.

G. Transformer Primary Overcurrent Protective Devices:

1. Device shall not operate in response to the following:

a. Inrush current when first energized.
b. Self-cooled, full-load current or forced-air-cooled, full-load current, whichever is specified for that transformer.
c. Permissible transformer overloads according to IEEE C57.96 if required by unusual loading or emergency conditions.

2. Device settings shall protect transformers according to IEEE C57.12.00, for fault currents.

H. Motor Protection:

1. Select protection for low-voltage motors according to IEEE 242 and NFPA 70.
2. Select protection for motors served at voltages more than 600 V according to IEEE 620.

I. Conductor Protection: Protect cables against damage from fault currents according to ICEA P-32-382, ICEA P-45-482, and protection recommendations in IEEE 242. Demonstrate that equipment withstands the maximum short-circuit current for a time equivalent to the tripping time of the primary relay protection or total clearing time of the fuse. To determine temperatures that damage insulation, use curves from cable manufacturers or from listed standards indicating conductor size and short-circuit current.

J. Generator Protection: Select protection according to manufacturer's written instructions and to IEEE 242.

K. Calculate short-circuit momentary and interrupting duties for a three-phase bolted fault and a single line-to-ground fault at each equipment indicated on one-line diagram.

1. For grounded systems, provide a bolted line-to-ground fault-current study for areas as defined for the three-phase bolted fault short-circuit study.

L. Protective Device Evaluation:

1. Evaluate equipment and protective devices and compare to short-circuit ratings.
2. Adequacy of switchgear, motor-control centers, and panelboard bus bars to withstand short-circuit stresses.
3. Any application of series-rated devices shall be recertified, complying with requirements in NFPA 70.
4. Include in the report identification of any protective device applied outside its capacity.

3.4 LOAD-FLOW AND VOLTAGE-DROP STUDY

A. Perform a load-flow and voltage-drop study to determine the steady-state loading profile of the system. Analyze power system performance two times as follows:

1. Determine load flow and voltage drop based on full-load currents obtained in "Power System Data" Article.
2. Determine load flow and voltage drop based on 80 percent of the design capacity of load buses.
3. Prepare load-flow and voltage-drop analysis and report to show power system components that are overloaded, or might become overloaded; show bus voltages that are less than as prescribed by NFPA 70.

3.5 FIELD ADJUSTING

A. Adjust relay and protective device settings according to recommended settings provided by the coordination study. Field adjustments shall be completed by the engineering service division of equipment manufacturer under the "Startup and Acceptance Testing" contract portion.

B. Make minor modifications to equipment as required to accomplish compliance with short-circuit and protective device coordination studies.

C. Testing and adjusting shall be by a full-time employee of the Field Adjusting Agency, who holds NETA ETT-Certified Technician Level III or NICET Electrical Power Testing Level III certification.

1. Perform each visual and mechanical inspection and electrical test stated in NETA ATS. Certify compliance with test parameters. Perform NETA tests and inspections for all adjustable overcurrent protective devices.

END OF SECTION 260573.16

THIS PAGE LEFT INTENTIONALLY BLANK

SECTION 260573.19 - ARC-FLASH HAZARD ANALYSIS

PART 1 - GENERAL

1.1 RELATED DOCUMENTS

A. Drawings and general provisions of the Contract, including General and Supplementary Conditions Specification Sections, apply to this Section.

1.2 SUMMARY

A. Section includes a computer-based, arc-flash study to determine the arc-flash hazard distance and the incident energy to which personnel could be exposed during work on or near electrical equipment.

1.3 DEFINITIONS

A. Existing to Remain: Existing items of construction that are not to be removed and that are not otherwise indicated to be removed, removed and salvaged, or removed and reinstalled.

B. Field Adjusting Agency: An independent electrical testing agency with full-time employees and the capability to adjust devices and conduct testing indicated and that is a member company of NETA.

C. One-Line Diagram: A diagram that shows, by means of single lines and graphic symbols, the course of an electric circuit or system of circuits and the component devices or parts used therein.

D. Power System Analysis Software Developer: An entity that commercially develops, maintains, and distributes computer software used for power system studies.

E. Power Systems Analysis Specialist: Professional engineer in charge of performing the study and documenting recommendations, licensed in the state where Project is located.

F. Protective Device: A device that senses when an abnormal current flow exists and then removes the affected portion from the system.

G. SCCR: Short-circuit current rating.

H. Service: The conductors and equipment for delivering electric energy from the serving utility to the wiring system of the premises served.

I. Single-Line Diagram: See "One-Line Diagram."

1.4 ACTION SUBMITTALS

A. Product Data: For computer software program to be used for studies.

B. Study Submittals: Submit the following submittals after the approval of system protective devices submittals. Submittals shall be in digital form:

1. Arc-flash study input data, including completed computer program input data sheets.
2. Arc-flash study report; signed, dated, and sealed by Power Systems Analysis Specialist.
3. Submit study report for action prior to receiving final approval of distribution equipment submittals. If formal completion of studies will cause delay in equipment manufacturing, obtain approval from Architect for preliminary submittal of sufficient study data to ensure that selection of devices and associated characteristics is satisfactory.

1.5 QUALITY ASSURANCE

A. Study shall be performed using commercially developed and distributed software designed specifically for power system analysis.

B. Software algorithms shall comply with requirements of standards and guides specified in this Section.

C. Manual calculations are unacceptable.

PART 2 - PRODUCTS

2.1 COMPUTER SOFTWARE DEVELOPERS

A. Manufacturers: Subject to compliance with requirements, provide products by one of the following:

1. EasyPower.
2. SKM Systems Analysis, Inc.

B. Comply with IEEE 1584 and NFPA 70E.

C. Analytical features of device coordination study computer software program shall have the capability to calculate "mandatory," "very desirable," and "desirable" features as listed in IEEE 399.

2.2 ARC-FLASH STUDY REPORT CONTENT

A. Executive summary of study findings.

B. Study descriptions, purpose, basis, and scope. Include case descriptions, definition of terms, and guide for interpretation of results.

C. One-line diagram, showing the following:

1. Protective device designations and ampere ratings.
2. Conductor types, sizes, and lengths.
3. Transformer kilovolt ampere (kVA) and voltage ratings, including derating factors and environmental conditions.
4. Motor and generator designations and kVA ratings.
5. Switchgear, switchboard, motor-control center, panelboard designations, and ratings.

D. Study Input Data: As described in "Power System Data" Article.

E. Short-Circuit Study Output Data: As specified in "Short-Circuit Study Output Reports" Paragraph in "Short-Circuit Study Report Contents" Article in "Short-Circuit Studies."

F. Protective Device Coordination Study Report Contents: As specified in "Coordination Study Report Contents" Article in "Coordination Studies."

G. Arc-Flash Study Output Reports:

1. Interrupting Duty Report: Three-phase and unbalanced fault calculations, showing the following for each equipment location included in the report:

    a. Voltage.
    b. Calculated symmetrical fault-current magnitude and angle.
    c. Fault-point X/R ratio.
    d. No AC Decrement (NACD) ratio.
    e. Equivalent impedance.
    f. Multiplying factors for 2-, 3-, 5-, and 8-cycle circuit breakers rated on a symmetrical basis.
    g. Multiplying factors for 2-, 3-, 5-, and 8-cycle circuit breakers rated on a total basis.

H. Incident Energy and Flash Protection Boundary Calculations:

1. Arcing fault magnitude.
2. Protective device clearing time.
3. Duration of arc.
4. Arc-flash boundary.
5. Restricted approach boundary.
6. Limited approach boundary.
7. Working distance.
8. Incident energy.
9. Hazard risk category.
10. Recommendations for arc-flash energy reduction.

I. Fault study input data, case descriptions, and fault-current calculations including a definition of terms and guide for interpretation of computer printout.

2.3 ARC-FLASH WARNING LABELS

A. Comply with requirements in "Identification for Electrical Systems" for self-adhesive equipment labels. Produce a 3.5-by-5-inch self-adhesive equipment label for each work location included in the analysis.

B. Label shall have an orange header with the wording, "WARNING, ARC-FLASH HAZARD," and shall include the following information taken directly from the arc-flash hazard analysis:

1. Location designation.
2. Nominal voltage.
3. Protection boundaries.

    a. Arc-flash boundary.
    b. Restricted approach boundary.
    c. Limited approach boundary.

4. Arc flash PPE category.
5. Required minimum arc rating of PPE in Cal/cm squared.
6. Available incident energy.
7. Working distance.
8. Engineering report number, revision number, and issue date.

C. Labels shall be machine printed, with no field-applied markings.

PART 3 - EXECUTION

3.1 EXAMINATION

A. Examine Project overcurrent protective device submittals. Proceed with arc-flash study only after relevant equipment submittals have been assembled. Overcurrent protective devices that have not been submitted and approved prior to arc-flash study may not be used in study.

3.2 ARC-FLASH HAZARD ANALYSIS

A. Comply with NFPA 70E and its Annex D for hazard analysis study.

B. Calculate maximum and minimum contributions of fault-current size.

1. Maximum calculation shall assume a maximum contribution from the utility and shall assume motors to be operating under full-load conditions.
2. Calculate arc-flash energy at 85 percent of maximum short-circuit current according to IEEE 1584 recommendations.
3. Calculate arc-flash energy at 38 percent of maximum short-circuit current according to NFPA 70E recommendations.
4. Calculate arc-flash energy with the utility contribution at a minimum and assume no motor contribution.

C. Calculate the arc-flash protection boundary and incident energy at locations in electrical distribution system where personnel could perform work on energized parts.

D. Include medium- and low-voltage equipment locations, except equipment rated 240 V ac or less fed from transformers less than 125 kVA.

E. Calculate the limited, restricted, and prohibited approach boundaries for each location.

F. Incident energy calculations shall consider the accumulation of energy over time when performing arc-flash calculations on buses with multiple sources. Iterative calculations shall take into account the changing current contributions, as the sources are interrupted or decremented with time. Fault contribution from motors and generators shall be decremented as follows:

1. Fault contribution from induction motors shall not be considered beyond three to five cycles.
2. Fault contribution from synchronous motors and generators shall be decayed to match the actual decrement of each as closely as possible (for example, contributions from permanent magnet generators will typically decay from 10 per unit to three per unit after 10 cycles).

G. Arc-flash energy shall generally be reported for the maximum of line or load side of a circuit breaker. However, arc-flash computation shall be performed and reported for both line and load side of a circuit breaker as follows:

1. When the circuit breaker is in a separate enclosure.
2. When the line terminals of the circuit breaker are separate from the work location.

H. Base arc-flash calculations on actual overcurrent protective device clearing time. Cap maximum clearing time at two seconds based on IEEE 1584, Section B.1.2.

3.3 POWER SYSTEM DATA

A. Obtain all data necessary for conduct of the arc-flash hazard analysis.

1. Verify completeness of data supplied on one-line diagram on Drawings. Call discrepancies to Architect's attention.
2. For new equipment, use characteristics from approved submittals under provisions of action submittals and information submittals for this Project.
3. For existing equipment, whether or not relocated, obtain required electrical distribution system data by field investigation and surveys conducted by qualified technicians and engineers.

B. Electrical Survey Data: Gather and tabulate the following input data to support study. Comply with recommendations in IEEE 1584 and NFPA 70E as to the amount of detail that is required to be acquired in the field. Field data gathering shall be under the direct supervision and control of the engineer in charge of performing the study, and shall be by the engineer or its representative who holds NETA ETT-Certified Technician Level III or NICET Electrical Power Testing Level III certification. Data include, but are not limited to, the following:

1. Product Data for overcurrent protective devices specified in other Sections and involved in overcurrent protective device coordination studies. Use equipment designation tags that are consistent with electrical distribution system diagrams, overcurrent protective device submittals, input and output data, and recommended device settings.
2. Obtain electrical power utility impedance or available short circuit current at the service.
3. Power sources and ties.
4. Short-circuit current at each system bus (three phase and line to ground).
5. Voltage level at each bus.
6. For transformers, include kVA, primary and secondary voltages, connection type, impedance, X/R ratio, taps measured in percent, and phase shift.
7. For circuit breakers and fuses, provide manufacturer and model designation. List type of breaker, type of trip and available range of settings, SCCR, current rating, and breaker settings.
8. Generator short-circuit current contribution data, including short-circuit reactance, rated kVA, rated voltage, and X/R ratio.
9. For relays, provide manufacturer and model designation, current transformer ratios, potential transformer ratios, and relay settings.
10. Busway manufacturer and model designation, current rating, impedance, lengths, size, and conductor material.
11. Motor horsepower and NEMA MG 1 code letter designation.
12. Low-voltage conductor sizes, lengths, number, conductor material and conduit material (magnetic or nonmagnetic).
13. Medium-voltage conductor sizes, lengths, conductor material, conductor construction and metallic shield performance parameters, and conduit material (magnetic or nonmagnetic).

3.4 LABELING

A. Apply one arc-flash label on the front cover of each section of the equipment for each equipment included in the study. Base arc-flash label data on highest values calculated at each location.

B. Each piece of equipment listed below shall have an arc-flash label applied to it:

1. Motor-control center.
2. Low-voltage switchboard.
3. Switchgear.
4. Medium-voltage switch.
5. Medium voltage transformers
6. Low voltage transformers. Exclude transformers with high voltage side 240 V or less and less than 125 kVA.
7. Panelboard and safety switch over 250 V.
8. Applicable panelboard and safety switch under 250 V.

C. Note on record Drawings the location of equipment where the personnel could be exposed to arc-flash hazard during their work.

1. Indicate arc-flash energy.
2. Indicate protection level required.

3.5 APPLICATION OF WARNING LABELS

A. Install arc-flash warning labels under the direct supervision and control of Power System Analysis Specialist.

END OF SECTION 260573.19

SECTION 26 08 00 – COMMISSIONING OF ELECTRICAL SYSTEMS

PART 1 - GENERAL

1.1 SUMMARY

A. Related Documents:

1. Drawings and general provisions of the Subcontract apply to this Section.

2. Review these documents for coordination with additional requirements and information that apply to work under this Section.

B. Section Includes:

1. This section specifies the unique responsibilities that are a part of, or are related to the commissioning process for the electrical systems. Electrical systems include those listed in Division 01 Section "General Commissioning Requirements" as being commissioned. All statements are the responsibility of the Subcontractor, unless specifically stated otherwise.

2. Electrical testing specified for systems not listed as formally commissioned are not under the commissioning umbrella and are not governed by this section.

3. Electrical Systems Commissioning consists of static checks of component and system installations and actual testing of equipment conditions and functions.

4. The Commissioning Authority will review and approve, prior to use, all test procedures and forms used and will witness a varying fraction of the initial checks and testing performed by the Subcontractor. The Commissioning Authority will review the completed check and test documentation of the Subcontractor of all checks and tests.

5. Electrical testing requirements are found in various sections in Division 01 and in Division 26 (Division 01 Section "General Commissioning Requirements" and this section). It is not the intent of the commissioning process or these specifications to duplicate efforts or to require the Subcontractor to perform any check or test twice. Checks and testing by the Subcontractor are expected to occur once in the normal sequence of installation and checkout if appropriate coordination has occurred allowing the Commissioning Authority to witness installations and initial testing. Identical electrical checks and testing requirements in both Division 01 and Division 26 are referring to the same event.

6. The test requirements listed in this section do not release the Subcontractor from the obligation to perform all other appropriate, industry standard, manufacturer-recommended or code-required checks and tests.

7. Testing Participants. The work of this section shall be performed by parties identified in the Check and Testing Responsibility Table--a supplement to Division 01 Section "General Commissioning Requirements". Static checks and testing shall be fully documented according to provisions in Division 01 Section "General Commissioning Requirements".

C. Related Sections:

1. Division 01 Section "General Requirements."

2. Division 01 Section "Special Procedures."

3. Division 01 Section "General Commissioning Requirements".

1.2 SUBMITTALS

A. Submit under provisions of Divisions 01 Section "General Requirements" and "Special Procedures."

1.3 QUALITY ASSURANCE

A. Qualifications:

1. The CTC (Certified Testing Company) performing the work of this section shall be qualified to test electrical equipment and is a NETA (National Electrical Testing Association)-certified testing agency. The CTC shall not be associated with the manufacturer of equipment or systems under test.

B. Test Equipment:

1. The Subcontractor shall provide all test equipment necessary to fulfill the checks and testing requirements. Test equipment shall have been calibrated within one (1) year of its use on the project.

2. Refer to Division 01 Section "General Commissioning Requirements" for additional requirements.

PART 2 - EXECUTION

2.1 SUBMITTALS

A. Sixty (60) days before any testing is conducted, submit an overall testing plan and schedule for electrical systems that lists the equipment, modes to be tested, dates of testing and parties conducting the tests. Put these tests into the master construction schedule. Keep this plan and schedule updated.

B. Additional submittal requirements relative to commissioning are found in this Section and in Division 01 Section "General Commissioning Requirements" and Division 01 Section "General Requirements."

2.2 COMMON RESPONSIBILITIES

A. The following are responsibilities applicable to all electrical systems being commissioned.

B. The general commissioning requirements and coordination are detailed in Division 01 Section "General Commissioning Requirements" and apply to electrical systems. The Subcontractor shall be familiar with all parts of Division 01 Section "General Commissioning Requirements" and the commissioning plan issued by the Commissioning Authority and shall execute all commissioning responsibilities assigned to them in the Contract Documents.

C. The work of this Section shall be performed by a CTC (Certified Testing Company, Electrical), by the EC (Electrical Subcontractor), or the MSR (Manufacturer's Service Representative). The Commissioning Authority has some testing responsibilities for some equipment. The specified

checks and static tests are conducted by any of the above listed parties, but the tests requiring measurements or special tools, or skills are generally conducted only by the CTC. The Check and Testing Responsibility Table, included as a supplement to Division 01 Section "General Commissioning Requirements" provides specific allocation of checklist oversight and testing responsibilities. The CTC, EC, and MSR shall document all checks and testing on check and test procedure forms submitted to and approved by the Commissioning Authority prior to testing.

D. The Subcontractor shall notify the CA ahead of time when commissioning activities not yet performed or not yet scheduled will delay construction. The Subcontractor shall be proactive in seeing that commissioning processes are executed, and that the CA has the scheduling information needed to efficiently execute the commissioning process.

E. The Subcontractor shall respond to notices of issues identified during the commissioning process, making required corrections or clarifications, and returning prompt notification to the Commissioning Authority according to the process given in Division 01 Section "General Commissioning Requirements".

F. When completion of a task or other issue has been identified as holding up any commissioning process, particularly functional testing, the Subcontractor shall, within two (2) days of notification of the issue, notify the Commissioning Authority in writing providing an expected date of completion. The Subcontractor shall notify the Commissioning Authority in writing within one day of completion. It is not the responsibility of the Commissioning Authority to obtain this status information through meeting attendance, asking questions or field observation

G. Construction Checklists. The Commissioning Authority or Subcontractor shall develop checklists as noted in the list of commissioned systems in Division 01 Section "General Commissioning Requirements", following the process described in Division 01 Section "General Commissioning Requirements" and in this Section. At a minimum, for a given piece of equipment, checks from the inspection checklists in NETA Acceptance Testing Specifications for Electric Power Distribution Equipment and Systems shall be included in the electrical checklists. The Subcontractor shall execute and document all checks.

H. Check and testing procedure and startup plan development and execution responsibilities are described in the Check and Testing Responsibility Table in the supplements to Division 01 Section "General Commissioning Requirements".

I. The Subcontractor shall review design documents, shop drawings and O&M manuals and manufacturer recommended installation and testing procedures of each system installation.

J. The Subcontractor shall monitor installation to ensure the equipment, configuration and quality of construction meets the design requirements, approved submittals, and shop drawings.

K. The Subcontractor shall develop test procedures and forms and execute and document testing according to the requirements of this Section, Division 01 Section "General Commissioning Requirements" and other specification sections containing testing requirements.

L. Tests of energized equipment shall be conducted when the equipment is operating at its normal capacity. This may require some tests to be conducted after occupancy.

M. Training and Orientation. The Subcontractor shall follow the facility staff orientation and training requirements as described in Division 01 Section "Demonstration and Training" and other applicable technical sections.

N. Operation And Maintenance (O&M) Manuals. Refer to Division 01 Section "General Commissioning Requirements" and Division 01 Section "General Requirements" for requirements for O&M manuals.

PART 3 - EQUIPMENT-SPECIFIC VERIFICATION AND TESTING REQUIREMENTS

3.1 SUMMARY

A. This Part specifies the check and testing requirements for electrical components and systems. From these requirements, the Commissioning Authority or Subcontractor will develop detailed procedures and forms. The general testing process, requirements and test method definitions are described in Division 01 Section "General Commissioning Requirements".

3.2 CHECKS AND TESTS

A. Checks are intended to begin upon completion of a component or equipment installation. Testing generally occurs later when systems are energized or nearing that point. Beginning system testing before full completion, does not relieve the Subcontractor from fully completing the system as soon as possible, including all construction checklists and may require retesting portions of the system once all components are fully functioning.

B. Refer to Division 01 Section "General Commissioning Requirements" for specific details on non-conformance issues relating to construction checklists and tests. Refer to Division 01 Section "General Commissioning Requirements", for common requirements of deferred testing and to articles in this Section.

C. The check and test procedures and record forms shall contain the following:

1. The Subcontractors executing the checks or tests.

2. A list of the integral components being inspected and tested, equipment tag numbers, manufacturer, model number, pertinent performance information / rating data.

3. Test equipment used.

4. Construction checklists associated with the components, if any.

5. Any special required conditions of the check or test for each procedure.

6. Items, conditions or functions to be inspected, verified or tested, the checks and testing method given, and a place provided with results recorded.

7. Acceptance criteria (or reference by specific table where the acceptance criteria is found).

8. For each procedure, list the technician performing check or test and company, witnesses of the tests and dates of tests.

9. Sampling strategies used.

D. The test procedures for dynamic equipment like lighting controls, emergency generator or fire alarm shall contain more step-by-step procedures with expected responses similar to the sample test provided as a supplement to Division 01 Section "General Commissioning Requirements". The test procedures and forms for more static components like panel boards, switch gear, circuit breakers, transformers, etc., can be more checklist-like in format. For each piece of equipment, checks and test procedures and their documentation record forms may be different documents or combined in the same document, but checks and tests should be grouped.

E. At the Commissioning Authority's discretion, if large numbers or repeated deficiencies are encountered, the Subcontractor shall test and troubleshoot all remaining systems at issue on their own before commissioning with the Commissioning Authority will resume.

F. Sampling for Identical Units. When there are a number of identical units, at the Commissioning Authority's discretion, some, or all procedures of a test for a piece of equipment or assembly may be omitted when these same tests on other pieces of identical equipment or assemblies were conducted without deficiency.

3.3 EQUIPMENT-SPECIFIC TESTING REQUIREMENTS

A. The following paragraphs define the testing requirements for each type of system or feature that is a part of the project. The Commissioning Authority shall use this information to develop specific testing procedures for each of the systems to be commissioned. The Subcontractor shall be responsible for support, execution and coordination of these tests as described in the project specifications including intersystem tests and interlocks with systems in Divisions other than Division 26.

B. Common Testing Requirements

1. The following requirements apply to all electrical systems and features that are to be commissioned when referenced below. Tests shall:

a. Verify functionality and compliance with the design intent for each individual sequence module in the sequences of operation. Verify proper operation of all control strategies, energy efficiency and self-diagnostics features by stepping through each sequence and documenting equipment and system performance. Test every step in every written sequence and other significant modes, sequences and operational features not mentioned in written sequences; including startup, normal operation, shutdown, scheduled on and off, unoccupied, and manual modes, safeties, alarms, over-rides, lockouts and power failure.

b. Verify all alarm and high and low limit functions and messages generated on all points with alarm settings.

c. Verify integrated performance of all components and control system components, including all interlocks and interactions with other equipment and systems.

d. Verify shut down and restart capabilities both for scheduled and unscheduled events (e.g., power failure recovery and normal scheduled start/stop).

e. When applicable, demonstrate a full cycle from off to on and no load to full load and then to no load and off.

f. Verify time of day schedules and setpoints.

g. Verify all energy saving control strategies.

h. Verify that monitoring system graphics are representative of the systems and that all points and control elements are in the same location on the graphic as they are in the field.

i. Verify operator control of all command able control system points including proper security level access.

j. When testing procedures for commissioned equipment are listed in NETA Acceptance Testing Specifications for Electric Power Distribution Equipment and Systems the NETA test procedures shall be part of the testing requirements of this specification. Additional testing procedures may be listed in this specification.

k. Common Acceptance Criteria

2. The following common acceptance criteria apply to all mechanical equipment, assemblies, and features:

a. For the conditions, sequences and modes tested, the equipment, integral components and related equipment shall respond to varying loads and changing conditions and parameters appropriately as expected, according to the sequences of operation, as specified, according to acceptable operating practice and the manufacturer's performance specifications. Verify that equipment operates within tolerances specified in governing codes, acceptance criteria contained in the construction documents, manufacturer's literature and according to good operating practice.

b. Systems shall accomplish their intended function and performance.

c. All safety trips shall require a manual reset to allow a system restart.

d. Resetting a manual safety shall result in a stable, safe, and predictable return to normal operation by the system.

e. Safety circuits and permissive control circuits shall function in all possible combinations of selector switch positions (hand, auto, inverter, bypass, etc.).

f. Other acceptance criteria is given in the equipment testing requirements articles or referenced standards.

g. Additional acceptance criteria will be developed by the Commissioning Authority when detailed test procedures are developed.

h. When testing procedures for commissioned equipment are listed in NETA Acceptance Testing Specifications for Electric Power Distribution Equipment and Systems the NETA performance criteria shall apply.

C. Equipment-Specific Testing Requirements:

1. Scheduled Lighting Controls.

a. Apply the applicable common testing requirements and acceptance criteria.

b. Test Methods. Utilize active testing, and trending when available. If able to trend, trend all zones over a week period and follow the trending guidelines in Division 23 Section "Commissioning of HVAC".

c. Sampling Strategy. Manually test 20 percent of the zones or at least four. If more than 10 percent or two zones fail, test another 10 percent sample. If the second sample fails the Subcontractor shall document retesting on all zones on their own using a Commissioning Authority approved form.

2. Occupancy/Vacancy Sensor Lighting Controls.

a. Apply applicable common testing requirements and acceptance criteria. Test all units' functions, including sensor sensitivity and time-to-OFF functions and ensure that sensor location is proper and won't be tripped inadvertently by other occupants and movements outdoors, etc.

D. Test Methods. Utilize active test methods.

1. Sampling Strategy. Test 10 percent of the sensors or six, whichever is greater. If more than 10 percent or two sensors fail, test another 10 percent sample. If the second sample fails, the Subcontractor shall document retesting on all units on their own using a Commissioning Authority approved form.

2. Additional Acceptance Criteria. Reasonable sensitivity, no inadvertent trips, lights go off within 15 seconds of design.

3. Emergency Generator System

a. Apply applicable common testing requirements and acceptance criteria.

b. Test according to NETA 7.22.1 and NFPA 110 5.13 and per Division 01 Section "Special Procedures."

c. Record all data and results.

d. Include the following tests:

1) When in enclosed spaces, verify combustion and ventilation air damper functions and pressure drop of exhaust.

2) Verify fuel oil system, diesel fuel storage tank, and level and low fuel indication alarms.

3) Verify all alarms, meters, and auxiliaries and interlocks to the BAS.

e. Building Test. Under a cold generator condition, provide full utility power interruption under load and cause emergency power service operation. If applicable, include all UPS in this test. Load bank the UPS if necessary, during test.

f. Verify all generator functions

g. Test auto-transfer switch operation under actual voltage drop, per specification Division 26 Section "Transfer Switches".

h. Using a power line disturbance monitor, measure the following times: power failure to engine start command, engine start command to engine start (cranking time), engine start to point where generator is at proper volts and frequency and total time from power failure until ATS switches.

i. Verify system reporting & control monitoring point-to-point

j. Verify that each circuit and equipment served by emergency power, does power up. Verify all functions of the Emergency Power Response Matrix.

k. Verify appropriate mechanical system and control system restart functions of all equipment served by the generator.

4. Step Load Tests.

   a. Test at 0 percent, 25 percent, 50 percent, and 100 percent of full load. Measure voltage and frequency and record all gaged engine conditions. The test shall consist of running the engine-generator while connected to the resistive load bank for one hour, and then shutting down for 30 minutes.

   b. Test for multiple generator starts.

   c. Verify all operational data and start-up minimum time interval.

   d. Verify 2-hour full load run full load bank (building load can serve as part of the load).

   e. Verify all generator-running characteristics.

   f. Verify battery-charging system.

5. Fire Alarm.

   a. Apply applicable common testing requirements and acceptance criteria.

   b. Test the fire alarm system according to NFPA 110-1999 7-1 through 7-2, and specification Division 28 Section "Multiplex Addressable Fire Alarm System – Voice Evacuation".

   c. Document all test procedures and results. A fire alarms system printout of the test annunciation record is not sufficient documentation.

   d. Verify all fire alarm panel functions, alarms, and troubles.

   e. Verify all functions in the Fire Alarm Response Matrix, including remote communications.

   f. Verify resetting of all equipment affected by an alarm.

   g. Sampling Strategy. Verify device functions and annunciations per using the approved sampling rate of the authority having jurisdiction and per LBNL.

END OF SECTION 26 08 00

SECTION 260923 - LIGHTING CONTROL DEVICES

PART 1 - GENERAL

1.1 RELATED DOCUMENTS

A. Drawings and general provisions of the Contract, including General and Supplementary Conditions and Division 01 Specification Sections, apply to this Section.

1.2 SUMMARY

A. Section Includes:

1. Indoor occupancy and vacancy sensors.
2. Switchbox-mounted occupancy sensors.
3. High-bay occupancy sensors.
4. Emergency shunt relays.
5. Conductors and Cables

B. Related Requirements:

1. Section 262726 "Wiring Devices" for wall-box dimmers, and manual light switches.

1.3 ACTION SUBMITTALS

A. Product Data: For each type of product.

B. Shop Drawings:

1. Show installation details for the following:

a. Occupancy sensors.
b. Vacancy sensors.

2. Interconnection diagrams showing field-installed wiring.
3. Include diagrams for power, signal, and control wiring.

1.4 INFORMATIONAL SUBMITTALS

A. Sample Warranty: For manufacturer's warranties.

1.5 CLOSEOUT SUBMITTALS

A. Operation and Maintenance Data: For each type of lighting control device to include in operation and maintenance manuals.

B. Hardware and Firmware Operational Documentation:

1. Hardware operating and upgrade manuals.

1.6 WARRANTY

A. Manufacturer's Warranty: Manufacturer and Installer agree to replace lighting control devices that fail(s) in materials or workmanship within specified warranty period.

1. Failures include, but are not limited to, the following:

a. Faulty operation of lighting control software.
b. Faulty operation of lighting control devices.

2. Warranty Period: Two year(s) from date of Substantial Completion and consisting of a one for one device replacement.

PART 2 - PRODUCTS

2.1 INDOOR OCCUPANCY AND VACANCY SENSORS

A. General Requirements for Sensors:

1. Wall or Ceiling-mounted, solid-state indoor occupancy and vacancy sensors.
2. Passive infrared or Dual technology (as indicated on drawings).
3. Hardwired connection to switch.
4. Listed and labeled as defined in NFPA 70, by a qualified testing agency, and marked for intended location and application.
5. Operation:

a. Occupancy Sensor: Unless otherwise indicated, turn lights on when coverage area is occupied, and turn them off when unoccupied; with a time delay for turning lights off, adjustable over a minimum range of 1 to 20 minutes.
b. Vacancy Sensor: Unless otherwise indicated, lights are manually turned on and sensor turns lights off when the room is unoccupied; with a time delay for turning lights off, adjustable over a minimum range of 1 to 20 minutes.

6. Sensor Output: Contacts rated to operate the connected relay, complying with UL 773A.
7. Power: Integral photovoltaic collector.
8. Mounting:

a. Sensor: Suitable for mounting in any position on a standard outlet box.
b. Time-Delay and Sensitivity Adjustments: Recessed and concealed behind hinged door.

9. Indicator: Digital display, to show when motion is detected during testing and normal operation of sensor.
10. Bypass Switch: Override the "on" function in case of sensor failure.

B. Dual-Technology Type: Ceiling mounted; detect occupants in coverage area using PIR and ultrasonic detection methods. The particular technology or combination of technologies that control on-off functions is selectable in the field by operating controls on unit.

1. Sensitivity Adjustment: Separate for each sensing technology.

2. Detector Sensitivity: Detect occurrences of 6-inch- (150-mm-) minimum movement of any portion of a human body that presents a target of not less than 36 sq. in. (232 sq. cm), and detect a person of average size and weight moving not less than 12 inches (305 mm) in either a horizontal or a vertical manner at an approximate speed of 12 inches/s (305 mm/s).
3. Detection Coverage (Standard Room): Detect occupancy anywhere within a circular area of 2000 sq. ft. (186 sq. m) when mounted on a 96-inch- (2440-mm-) high ceiling.

2.2 SWITCHBOX-MOUNTED OCCUPANCY SENSORS

A. General Requirements for Sensors: Automatic-wall-switch occupancy sensor with manual on-off switch, suitable for mounting in a single gang switchbox using hardwired connection.

1. Listed and labeled as defined in NFPA 70, by a qualified testing agency, and marked for intended location and application.
2. Occupancy Sensor Operation: Unless otherwise indicated, turn lights on when coverage area is occupied, and turn lights off when unoccupied; with a time delay for turning lights off, adjustable over a minimum range of 1 to 20 minutes.
3. Operating Ambient Conditions: Dry interior conditions, 32 to 120 deg F (0 to 49 deg C).
4. Switch Rating: Not less than 1000-VA LED load at 120 V, 1200-VA LED load at 277 V.

B. Wall-Switch Sensor:

1. Standard Range: 180-degree field of view, field adjustable from 180 to 40 degrees; with a minimum coverage area of 2100 sq. ft (196 sq. m).
2. Sensing Technology: Dual technology.
3. Switch Type: SP, manual "on," automatic "off."
4. Capable of controlling load in three-way application.
5. Voltage: Dual voltage - 120 and 277 V.
6. Concealed, field-adjustable, "off" time-delay selector at up to 20 minutes.
7. Color: Coordinate color of switch and faceplate requirements with Section 262726 “Wiring Devices”.

2.3 HIGH-BAY OCCUPANCY SENSORS

A. Description: Solid-state unit. The unit is designed to operate with the fixtures and driver indicated.

1. Listed and labeled as defined in NFPA 70, by a qualified testing agency, and marked for intended location and application.
2. Operation: Turn lights on when coverage area is occupied, and to half-power when unoccupied; with a time delay for turning lights to half-power that is adjustable over a minimum range of 1 to 16 minutes.
3. Operating Ambient Conditions: 32 to 149 deg F (0 to 65 deg C).
4. Mounting: Suitable for mounting in any position on a standard outlet box.
5. Time-Delay and Sensitivity Adjustments: Recessed and concealed behind cover.
6. Detector Technology: PIR.

B. Detector Coverage: PIR lenses, suitable for mounting heights from 12 to 50 feet (3.7 to 15.2 m).

2.4 EMERGENCY SHUNT RELAY

A. Description: NC, electrically held relay, arranged for wiring in parallel with automatic switching contacts; complying with UL 924.

1. Coil Rating: 120 or 277 V.

2.5 CONDUCTORS AND CABLES

A. Power Wiring to Supply Side of Remote-Control Power Sources: Not smaller than No. 12 AWG. Comply with requirements in Section 260519 "Low-Voltage Electrical Power Conductors and Cables."

B. Classes 2 and 3 Control Cable: Multiconductor cable with stranded-copper conductors not smaller than No. 18 AWG. Comply with requirements in Section 260519 "Low-Voltage Electrical Power Conductors and Cables."

C. Class 1 Control Cable: Multiconductor cable with stranded-copper conductors not smaller than No. 14 AWG. Comply with requirements in Section 260519 "Low-Voltage Electrical Power Conductors and Cables."

PART 3 - EXECUTION

3.1 EXAMINATION

A. Examine lighting control devices before installation. Reject lighting control devices that are wet, moisture damaged, or mold damaged.

B. Examine walls and ceilings for suitable conditions where lighting control devices will be installed.

C. Proceed with installation only after unsatisfactory conditions have been corrected.

3.2 SENSOR INSTALLATION

A. Comply with NECA 1.

B. Coordinate layout and installation of ceiling-mounted devices with other construction that penetrates ceilings or is supported by them, including light fixtures, HVAC equipment, smoke detectors, fire-suppression systems, and partition assemblies.

C. Install and aim sensors in locations to achieve not less than 90 percent coverage of areas indicated. Do not exceed coverage limits specified in manufacturer's written instructions.

3.3 WIRING INSTALLATION

A. Comply with NECA 1.

B. Wiring Method: Comply with Section 260519 "Low-Voltage Electrical Power Conductors and Cables." Minimum conduit size is 1/2 inch (13 mm) when installed in inaccessible spaces. Utilizing adjacent line voltage power conduit is acceptable providing that insulation requirements are maintained (600V). Exposed conductors in accessible spaces is acceptable when proper cabling installation techniques are utilized.

C. Wiring within Enclosures: Comply with NECA 1. Separate power-limited and nonpower-limited conductors according to conductor manufacturer's written instructions.

D. Size conductors according to lighting control device manufacturer's written instructions unless otherwise indicated.

E. Splices, Taps, and Terminations: Make connections only on numbered terminal strips in junction, pull, and outlet boxes; terminal cabinets; and equipment enclosures.

F. Provide written or computer-generated documentation on the configuration of the system including room by room description including:
1. Sensor parameters, time delays, sensitivities, and daylighting setpoints.
2. Sequence of operation, (e.g. manual ON, Auto OFF. etc.)
3. Load Parameters (e.g. blink warning, etc.)

3.4 IDENTIFICATION

A. Identify components and power and control wiring according to Section 260553 "Identification for Electrical Systems."

1. Identify circuits or luminaires controlled by photoelectric and occupancy sensors at each sensor.

3.5 FIELD QUALITY CONTROL

A. Manufacturer's Field Service: Engage a factory-authorized service representative to test and inspect components, assemblies, and equipment installations, including connections.

1. Operational Test: After installing time switches and sensors, and after electrical circuitry has been energized, start units to confirm proper unit operation.
2. Test and adjust controls and safeties. Replace damaged and malfunctioning controls and equipment.

B. Tests and Inspections: Manufacturer's service representative shall perform the following inspections and prepare reports.

1. Verify Class I and II wiring connections are terminated properly by validating system performance.
2. Set IP addresses and other network settings of system front end hardware per facilities IT instructions.
3. Verify / complete task programming for all switches, dimmers, time clocks, and sensors.
4. Verify that the control of each space complies with the Sequence of Operation.
5. Correct any system issues and retest.

C. Lighting control devices will be considered defective if they do not pass tests and inspections.

D. Provide a report in table format with drawings or using a software file that can be opened in the manufacturer's system software including each room or space that has lighting control installed. Indicate the following:

1. Date of test or inspection.
2. Loads per space, or Fixture Address identification.
3. Quantity and Type of each device installed
4. Reports providing each device's settings.

3.6 ADJUSTING

A. Occupancy Adjustments: When requested within 12 months from date of Substantial Completion, provide on-site assistance in adjusting lighting control devices to suit actual occupied conditions. Provide up to two visits to Project during other-than-normal occupancy hours for this purpose.

1. For occupancy and motion sensors, verify operation at outer limits of detector range. Set time delay to suit Owner's operations.
2. For daylighting controls, adjust set points and deadband controls to suit Owner's operations.
3. Align high-bay occupancy sensors using manufacturer's laser aiming tool.

3.7 FIRMWARE SERVICE AGREEMENT

A. Technical Support: Beginning at Substantial Completion, service agreement shall include firmware support for two years.

B. Upgrade Service: At Substantial Completion, update firmware to latest version. Install and program firmware upgrades that become available within two years from date of Substantial Completion.

1. Upgrade Notice: At least 30 days to allow Owner to schedule and access the system and to upgrade equipment if necessary.

3.8 DEMONSTRATION

A. Before Substantial Completion, arrange and provide a one-day Owner instruction period to designated Owner personnel. Set-up, starting of the lighting control system and Owner instruction includes:

1. Confirmation of entire system operation and communication to each device.
2. Confirmation of operation of individual relays, switches, and sensors.
3. Confirmation of system Programming, override settings, etc.
4. Provide training to cover installation, programming, operation, and troubleshooting of the lighting control system.

3.9 PRODUCT SUPPORT AND SERVICE

A. Factory telephone support shall be available at no cost to the Owner following acceptance. Factory assistance shall consist of assistance in solving application issues pertaining to the control equipment.

END OF SECTION 260923

THIS PAGE LEFT INTENTIONALLY BLANK

SECTION 260943 - DISTRIBUTED INTELLIGENCE BASED LIGHTING CONTROL

PART 1 GENERAL

1.1 SECTION INCLUDES

A. Distributed Digital Lighting Control System: System includes
   1. Digital Lighting Controls
   2. Emergency Lighting Control.

1.2 RELATED SECTIONS

A. Section 26 51 19 – LED Interior Lighting.

B. Section 26 56 19 – LED Exterior Lighting.

C. Section 26 52 13 - Emergency and Exit Lighting.

1.3 REFERENCES

A. NFPA 70 - National Electrical Code; National Fire Protection Association.

B. NEMA - National Electrical Manufacturers Association

C. FCC emission standards

D. UL - Underwriters Laboratories, Inc. Listings

E. UL 20 - General Use Switches, Plug Load Controls

F. UL 924 - Standard for Emergency Lighting and Power Equipment

1.4 DESIGN / PERFORMANCE REQUIREMENTS

A. Digital Lighting Management System shall accommodate the square-footage coverage requirements for each area controlled, utilizing room controllers, digital occupancy sensors, switches, daylighting sensors and accessories that suit the required lighting and electrical system parameters.

B. System shall conform to requirements of NFPA 70.

C. System shall comply with FCC emission standards specified in part 15, sub-part J for commercial and residential application.

D. System shall be listed under UL sections 916 and/or 508.

1.5 SUBMITTALS

A. Submit under provisions of Section 01 30 00 - Administrative Requirements.

B. Product Data: Manufacturer's data sheets on each product to be used, including:
   1. Catalog sheets and specifications.
   2. Ratings, configurations, standard wiring diagrams, dimensions, colors, service condition requirements, and installed features.
   3. Storage and handling requirements and recommendations.
   4. Installation instructions.

C. Shop Drawings: Wiring diagrams for the various components of the System specified including:
   1. Composite wiring and/or schematic diagram of each control circuit as proposed to be installed.
   2. Show location of all devices, including at minimum sensors, load controllers, and switches/dimmers for each area on reflected ceiling plans.
   3. Provide room/area details including products and sequence of operation for each room or area. Illustrate typical acceptable room/area connection topologies.
   4. Network riser diagram including floor and building level details. Include network cable specification. Illustrate points of connection to integrated systems. Coordinate integration with mechanical and/or other trades.

D. Manufacturer's Certificates: Certify products meet or exceed specified requirements.

E. Closeout Submittals:
   1. Project Record Documents: Record actual installed locations and settings for lighting control devices.
   2. Operation and Maintenance Manual:
      a. Include approved Shop Drawings and Product Data.
      b. Include Sequence of Operation, identifying operation for each room or space.
      c. Include manufacturer's maintenance information.
      d. Operation and Maintenance Data: Include detailed information on device programming and setup.
      e. Include startup and test reports.

1.6 QUALITY ASSURANCE

A. Manufacturer Qualifications: Company specializing in manufacturing of centralized and distributed lighting control systems with a minimum of 10 years documented experience.

1.7 DELIVERY, STORAGE, AND HANDLING

A. Store products in a clean, dry space in original manufacturer's packaging in accordance with manufacturer's written instructions until ready for installation

1.8 PROJECT CONDITIONS

A. Maintain environmental conditions (temperature, humidity, and ventilation) within limits recommended by manufacturer for optimum results. Do not install products under environmental conditions outside manufacturer's absolute limits.

B. Do not install equipment until following conditions can be maintained in spaces to receive equipment:
   1. Ambient temperature: 32 to 104 degrees F (0 to 40 degrees C).
   2. Relative humidity: Maximum 90 percent, non-condensing.

1.9 WARRANTY

A. Manufacturer shall provide a 5 year limited warranty on products within this installation, except where otherwise noted, and consisting of a one for one device replacement.

PART 2 PRODUCTS

2.1 MANUFACTURERS

A. Manufacturers: Subject to compliance with requirements, provide products by one of the following:

1) WattStopper, a division of Legrand North America, LLC.
2) nLIGHT, a division of Acuity Brands Inc.
3) NX Lighting Controls, HLI Solutions, Inc.

B. Requests for substitutions will be considered in accordance with provisions of Section 01 60 00 - Product Requirements.

2.2 DISTRIBUTED DIGITAL LIGHTING CONTROL SYSTEM

A. System General: Provide Digital Lighting Management System complete with all necessary enclosures, wiring, and system components to ensure a complete and properly functioning system as indicated on the Drawings and specified herein. If a conflict is identified, between the Drawing and this Specification, contact the Architect for clarification prior to proceeding.
   1. Space Control Requirements: Provide occupancy/vacancy sensors with Manual- or Partial-ON functionality as indicated in all spaces except toilet rooms, storerooms, library stacks, or other applications where hands-free operation is desirable and Automatic-ON occupancy sensors are more appropriate. Provide Manual-ON occupancy/vacancy sensors for any enclosed office, conference room, meeting room, open plan system and training room. For spaces with multiple occupants, or where line-of-sight may be obscured, provide ceiling- or corner-mounted sensors and Manual-ON switches.
   2. Daylit Areas: Provide daylight-responsive automatic control in all spaces (conditioned or unconditioned) where daylight contribution is available as defined by relevant local building energy code:
      a. All luminaires within code-defined daylight zones shall be controlled separately from luminaires outside of daylit zones.
      b. Daytime setpoints for total ambient illumination (combined daylight and electric light) levels that initiate dimming shall be programmed in compliance with relevant local building energy codes.
      c. Multiple-level switched daylight harvesting controls may be utilized for areas marked on drawings.
      d. Provide smooth and continuous daylight dimming for areas marked on drawings. Daylighting control system may be designed to turn off electric lighting when daylight is at or above required lighting levels, only if system functions to turn lamps back on at dimmed level, rather than turning full-on prior to dimming.
   3. Conference, meeting, training, auditoriums, and multipurpose rooms shall have controls that allow for independent control of each local control zone. Occupancy / vacancy sensors shall be provided to turn off all lighting in the space. Spaces with up to four moveable walls shall include controls that can be reconfigured when the room is partitioned.

B. Equipment Required: Lighting Control and Automation system as defined under this section covers the following equipment.
   1. Digital Lighting Management local network: Free topology, plug-in wiring system (Cat 5e) for power and data to room devices.
   2. Digital Room Controllers: Self-configuring, digitally addressable one, two or three relay plenum-rated controllers for on/off control. Selected models include 0-10 volt or line voltage forward phase control dimming outputs and integral current monitoring capabilities.
   3. Digital Occupancy Sensors: Self-configuring, digitally addressable, calibrated occupancy sensors with LCD display and two-way active infrared (IR) communications.
   4. Digital Switches: Self-configuring, digitally addressable pushbutton on/off, dimming, and scene switches.
   5. Digital Daylighting Sensors: Single-zone closed loop, multi-zone open loop and single-

zone dual-loop daylighting sensors with two-way active infrared (IR) communications for daylight harvesting using switching, bi-level, tri-level or dimming control.

6. Digital Lighting Management segment network: Linear topology, BACnet MS/TP network (1.5 twisted pair, shielded) to connect multiple local networks for centralized control.
7. Network Bridge: Provides BACnet MS/TP-compliant digital networked communication between rooms, panels and the Segment Manager or building automation system (BAS) and automatically creates BACnet objects representative of connected devices.
8. Segment Manager: BACnet MS/TP-based controller with web browser-based user interface for system control, scheduling, power monitoring, room device parameter administration and reporting.

2.3 DIGITAL LOAD CONTROLLERS

A. Digital Load Controllers: Digital controllers for lighting zones, fixtures automatically bind room loads to the connected control devices in the space without commissioning or the use of any tools. Provide controllers to match the room lighting requirements. Controllers are simple to install, and do not have dip switches/potentiometers, or require special configuration for standard Plug n' Go applications. Control units include the following features

1. Automatic room configuration to the most energy-efficient sequence of operation based upon the devices in the room.
2. Simple replacement using the default automatic configuration capabilities, a room controller may be replaced with an off-the-shelf device.
3. Multiple room controllers connected together in a local network must automatically arbitrate with each other, without requiring any configuration or setup, so that individual load numbers are assigned based on each controller's device ID's from highest to lowest.
4. Device Status LEDs to indicate:
   a. Data transmission
   b. Device has power
   c. Status for each load
   d. Configuration status
5. Quick installation features including:
   a. Standard junction box mounting
   b. Quick low voltage connections using standard RJ-45 patch cable
6. Based on individual configuration, each load shall be capable of the following behavior on power up following the loss of normal power:
   a. Turn on to 100 percent
   b. Turn off
   c. Turn on to last level
7. Each load be configurable to operate in the following sequences based on occupancy:
   a. Auto-on/Auto-off (Follow on and off)
   b. Manual-on/Auto-off (Follow off only)
8. BACnet object information shall be available for the following objects:
   a. Load status
   b. Schedule state, normal or after-hours
   c. Demand Response enable and disable
   d. Room occupancy status
   e. Total room lighting and plug loads watts
9. UL 2043 plenum rated
10. Manual override and LED indication for each load
11. Zero cross circuitry for each load
12. All digital parameter data programmed into an individual room controller or plug load controller shall be retained in non-volatile FLASH memory within the controller itself. Memory shall have an expected life of no less than 10 years.

13. Dimming Room Controllers shall share the following features:
    a. Each load shall have an independently configurable preset on level for Normal Hours and After Hours events to allow different dimmed levels to be established at the start of both Normal Hours and After Hours events.
    b. Fade rates for dimming loads shall be specific to bound switch buttons, and the load shall maintain a default value for any bound buttons that do not specify a unique value.
    c. Override button for each load provides the following functions:
        1) Press and release for on/off control
        2) Press and hold for dimming control
    d. Each dimming output channel shall have an independently configurable minimum and maximum calibration trim level to set the dimming range to match the true dynamic range of the connected ballast or driver. LED level indicators on bound dimming switches shall utilize this new maximum and minimum trim.
    e. Each dimming output channel shall have an independently configurable minimum and maximum trim level to set the dynamic range of the output within the new 0-100 percent dimming range defined by the minimum and maximum calibration trim.
    f. Calibration and trim levels must be set per output channel. Devices that set calibration or trim levels per controller (as opposed to per load) are not acceptable.
    g. All configuration shall be digital. Devices that set calibration or trim levels per output channel via trim pots or dip-switches are not acceptable.

B. On/Off Room Controllers shall include:
    1. Dual voltage (120/277 VAC, 60 Hz) capable rated for 20A total load
    2. One or two relay configuration
    3. Simple 150 mA switching power supply.
    4. Three RJ-45 local network ports with integral strain relief and dust cover

C. On/Off/0-10V Dimming KO Mount Room Controllers shall include:
    1. Dual voltage (120/277 VAC, 60 Hz) capable rated for 10A (or greater) total load
    2. One or two relays configurations
    3. Smart 150 mA switching power supply
    4. Two RJ-45 local network ports. Provide molded strain relief ring
    5. One dimming output per relay
        a. 0-10V Dimming - Where indicated, one 0-10 volt analog output per relay for control of compatible LED drivers. The 0-10 volt output shall automatically open upon loss of power to the Room Controller to assure full light output from the controlled lighting.

D. On/Off/ Forward Phase Dimming Room Controllers shall include:
    1. Dual voltage (120/277 VAC, 60 Hz) rated for 20A total load, with forward phase dimmed loads derating to 16A for some load types
    2. One or two relays configurations
    3. Smart 250 mA switching power supply
    4. Four RJ-45 local network ports. Provide integral strain relief
    5. One dimming output per relay
        a. Line Voltage, Forward Phase Dimming - Where indicated, one forward phase control line voltage dimming output per relay for control of compatible two-wire or three-wire ballasts, LED drivers, MLV, forward phase compatible ELV, neon/cold cathode and incandescent loads.

2.4 DIGITAL WALL OR CEILING MOUNTED OCCUPANCY SENSOR

A. Digital Occupancy Sensors shall provide graphic LCD display for digital calibration and

electronic documentation. Features include the following:

1. Digital calibration and pushbutton configuration for the following variables:
   a. Sensitivity, 0-100 percent in 10 percent increments
   b. Time delay, 1-30 minutes in 1 minute increments
   c. Test mode, Five second time delay
   d. Detection technology, PIR, Ultrasonic or Dual Technology activation and/or re-activation.
   e. Walk-through mode
2. Load parameters options including Auto/Manual-ON, blink warning, and daylight enable/disable when photosensors are included on the local network.
3. Programmable control functionality including:
   a. Each sensor may be programmed to control specific loads within a local network.
   b. Sensor shall be capable of activating one of 16 user-definable lighting scenes.
   c. Adjustable retrigger time period for manual-on loads. Load will retrigger (turn on) automatically within a configurable period of time (default 10 seconds) after turning off.
   d. On dual technology sensors, independently configurable trigger modes are available for both Normal (NH) and After Hours (AH) time periods. The retrigger mode can be programmed to use the following technologies:
   e. Ultrasonic and Passive Infrared
   f. Ultrasonic or Passive Infrared
   g. Ultrasonic only
   h. Passive Infrared only
   i. Independently configurable sensitivity settings for passive infrared and ultrasonic technologies (on dual technology sensors) for both Normal (NH) and After Hour (AH) time periods.
4. One or two RJ-45 port(s) for connection to local network.
5. Device Status LEDs, which may be disabled for selected applications, including:
   a. PIR detection
   b. Ultrasonic detection
   c. Configuration mode
   d. Load binding
6. Assignment of occupancy sensor to a specific load within the room without wiring or special tools.
7. Manual override of controlled loads.
8. All digital parameter data programmed into an individual occupancy sensor shall be retained in non-volatile FLASH memory within the sensor itself. Memory shall have an expected life of no less than 10 years.

B. BACnet object information shall be available for the following objects:
   1. Detection state
   2. Occupancy sensor time delay
   3. Occupancy sensor sensitivity, PIR and Ultrasonic

C. Units shall not have any dip switches or potentiometers for field settings

2.5 DIGITAL WALL SWITCH OCCUPANCY SENSORS

A. Digital Occupancy Sensors shall provide scrolling LCD display for digital calibration and electronic documentation. Features include the following:
   1. Digital calibration and pushbutton configuration for the following variables:
      a. Sensitivity: 0-100 percent in 10 percent increments
      b. Time delay: 1-30 minutes in 1 minute increments
      c. Test mode: Five second time delay
      d. Detection technology: PIR, Dual Technology activation and/or re-activation.

e. Walk-through mode
f. Load parameters including Auto/Manual-ON, blink warning, and daylight enable/disable when photosensors are included in the local network.

2. Programmable control functionality including:
   a. Each sensor may be programmed to control specific loads within a local network.
   b. Sensor shall be capable of activating one of 16 user-definable lighting scenes.
   c. Adjustable retrigger time period for manual-on loads. Load will retrigger (turn on) automatically during the configurable period of time (default 10 seconds) after turning off.
   d. On dual technology sensors, independently configurable trigger modes are available for both Normal (NH) and After Hours (AH) time periods. The retrigger mode can be programmed to use the following technologies:
      1) Ultrasonic and Passive Infrared
      2) Ultrasonic or Passive Infrared
      3) Ultrasonic only
      4) Passive Infrared only
3. Independently configurable sensitivity settings for passive infrared and ultrasonic technologies (on dual technology sensors) for both Normal (NH) and After Hour (AH) time periods.
4. Two RJ-45 ports for connection to local network.
5. Device Status LEDs including
   a. PIR detection
   b. Ultrasonic detection
   c. Configuration mode
   d. Load binding
6. Assignment of any occupancy sensor to a specific load within the room without wiring or special tools.
7. Assignment of local buttons to specific loads within the room without wiring or special tools
8. Manual override of controlled loads
9. All digital parameter data programmed into an individual wall switch sensor shall be retained in non-volatile FLASH memory within the wall switch sensor itself. Memory shall have an expected life of no less than 10 years.

B. BACnet object information shall be available for the following objects:
   1. Detection state
   2. Occupancy sensor time delay
   3. Occupancy sensor sensitivity, PIR and Ultrasonic
   4. Button state
   5. Switch lock control
   6. Switch lock status

C. Units shall not have any dip switches or potentiometers for field settings.

D. Two-button wall switch occupancy sensors, when connected to a single relay dimming room or fixture controller, shall operate in the following sequence as a factory default:
   1. Left button
      a. Press and release - Turn load on
      b. Press and hold - Raise dimming load
   2. Right button
      a. Press and release - Turn load off
      b. Press and hold - Lower dimming load

E. Low voltage momentary pushbuttons shall include the following features:
   1. Load/Scene Status LED on each switch button with the following characteristics:

a. Bi-level LED
b. Dim locator level indicates power to switch
c. Bright status level indicates that load or scene is active

2.6 DIGITAL WALL SWITCHES

A. Low voltage momentary pushbutton switches in 1, 2, 3, 4, 5 and 8 button configuration. Wall switches shall include the following features:
   1. Removable buttons for field replacement with engraved buttons and/or alternate color buttons. Button replacement may be completed without removing the switch from the wall.
   2. Load/Scene Status LED on each switch button with the following characteristics:
      a. Bi-level LED
      b. Dim locator level indicates power to switch
      c. Bright status level indicates that load or scene is active
      d. Dimming switches shall include seven bi-level LEDs to indicate load levels using 14 steps.
   3. Programmable control functionality including:
      a. Button priority may be configured to any BACnet priority level, from 1-16, corresponding to networked operation allowing local actions to utilize life safety priority
      b. Scene patterns may be saved to any button other than dimming rockers. Once set, buttons may be digitally locked to prevent overwriting of the preset levels.
   4. All digital parameter data programmed into an individual wall switch shall be retained in non-volatile FLASH memory within the wall switch itself. Memory shall have an expected life of no less than 10 years.

B. BACnet object information shall be available for the following objects:
   1. Button state
   2. Switch lock control
   3. Switch lock status

C. Two RJ-45 ports for connection to the local network.

D. Load and Scene button function may be reconfigured for individual buttons from Load to Scene, and vice versa.
   1. Individual button function may be configured to Toggle, On only or Off only.
   2. Individual scenes may be locked to prevent unauthorized change.
   3. Fade Up and Fade Down times for individual scenes may be adjusted from 0 seconds to 18 hours.
   4. Ramp rate may be adjusted for each dimmer switch.
   5. Switch buttons may be bound to any load on any load controller or relay panel and are not load type dependent; each button may be bound to multiple loads.

2.7 DIGITAL DAYLIGHTING SENSORS

A. Digital daylighting sensors shall work with load controllers and relay panels to provide automatic switching, bi-level, or tri-level or dimming daylight harvesting capabilities for any load type connected to the controller or panel. Daylighting sensors shall be interchangeable without the need for rewiring.
   1. Closed loop sensors measure the ambient light in the space and control a single lighting zone.
   2. Open loop sensors measure incoming daylight in the space and are capable of controlling up to three lighting zones.

B. Digital daylighting sensors shall include the following features:
   1. Sensor's internal photodiode shall only measure lightwaves within the visible

spectrum. The photodiode's spectral response curve shall closely match the entire photopic curve. Photodiode shall not measure energy in either the ultraviolet or infrared spectrums. Photocell shall have a sensitivity of less than 5 percent for any wavelengths less than 400 nanometers or greater than 700 nanometers.

2. Sensor light level range shall be from 1-6,000 foot-candles (fc) minimum.
3. Capability of ON/OFF, bi-level or tri-level switching, or dimming, for each controlled zone, depending on the selection of load controller(s) and load binding to controller(s).
4. For switching daylight harvesting, the photosensor shall provide a field-selectable deadband, or a separation, between the "ON Setpoint" and the "OFF Setpoint" that will prevent the lights from cycling excessively after they turn off.
5. For dimming daylight harvesting, the photosensor shall provide the option, when the daylight contribution is sufficient, of turning lights off or dimming lights to a field-selectable minimum level.
6. Photosensors shall have a digital, independently configurable fade rate for both increasing and decreasing light level in units of percent per second.
7. Photosensors shall provide adjustable cut-off time. Cut-off time is defined by the number of selected minutes the load is at the minimum output before the load turns off. Selectable range between 0-240 minutes including option to never cut-off.
8. Optional wall switch override shall allow occupants to reduce lighting level to increase energy savings or, if permitted by system administrator, raise lighting levels for a selectable period of time or cycle of occupancy.
9. Configuration LED status light on device that blinks to indicate data transmission.
10. Status LED indicates test mode, override mode and load binding.
11. Recessed switch on device to turn controlled load(s) ON and OFF.
12. BACnet object information shall be available for the following daylighting sensor objects, based on the specific photocell's settings:
    a. Light level
    b. Day and night setpoints
    c. Off time delay
    d. On and off setpoints
    e. Up to three zone setpoints
    f. Operating mode - on/off, bi-level, tri-level or dimming
13. One RJ-45 port for connection to the local network.
14. A choice of accessories to accommodate multiple mounting methods and building materials. Photosensors may be mounted on a ceiling tile, skylight light well or backbox.
15. Any load or group of loads in the room can be assigned to a daylighting zone
16. Each load within a daylighting zone can be individually enabled or disabled for discrete control (load independence).
17. All digital parameter data programmed into a photosensor shall be retained in non-volatile FLASH memory within the photosensor itself. Memory shall have an expected life of no less than 10 years.

C. Closed loop digital photosensors shall include the following additional features:
1. An internal photodiode that measures light in a 100-degree angle, cutting off the unwanted light from bright sources outside of this cone.
2. Automatic self-calibration, initiated from the photosensor, a wireless configuration tool or a PC with appropriate software.
3. Automatically establishes application-specific setpoints following self-calibration. For switching operation, an adequate deadband between the ON and OFF setpoints shall prevent the lights from cycling; for dimming operation a sliding setpoint control algorithm with separate Day and Night setpoints shall prevent abrupt ramping of loads.

D. Open loop digital photosensors shall include the following additional features:
1. An internal photodiode that measures light in a 60-degree angle (cutting off the

unwanted light from the interior of the room).

2. Automatically establishes application-specific setpoints following manual calibration using a wireless configuration tool or a PC with appropriate software. For switching operation, an adequate deadband between the ON and OFF setpoints for each zone shall prevent the lights from cycling; for dimming operation, a proportional control algorithm shall maintain the design lighting level in each zone.
3. Each of the three discrete daylight zones can include any non overlapping group of loads in the room.

2.8 HANDHELD CONFIGURATION TOOLS

A. Provide a wireless configuration tool to facilitate customization of the local network using two-way infrared communications, and/or PC software that connects to each local network via a USB interface.

B. Features and functionality of the wireless configuration tool shall include but not be limited to:
1. Two-way infrared (IR) communication with IR-enabled devices within a range of approximately 30 feet.
2. High visibility organic LED (OLED) display, pushbutton user interface and menu-driven operation.
3. Must be able to read and modify parameters for load controllers and relay panels, occupancy sensors, wall switches, daylighting sensors, network bridges, and identify network devices by type and serial number.
4. Save up to eight occupancy sensor setting profiles, and apply profiles to selected sensors.
5. Temporarily adjust light level of any load(s) on the local network and incorporate those levels in scene setting. Set room mode for testing of Normal Hours (NH) and After Hours (AH) parameter settings.
6. Adjust or fine-tune daylighting settings established during auto-configuration, and input light level data to complete configuration of open loop daylighting controls.
7. Set room mode for testing of Normal Hours (NH) and After Hours (AH) parameter settings.
8. Verify status of building level network devices.

2.9 SEGMENT NETWORK

A. Provide a segment network using linear topology, BACnet-based MS/TP (or Cat-5e) subnet to connect local networks (rooms).
1. Network bridges, relay panels and segment managers shall include terminal blocks, with provisions for separate "in" and "out" terminations, for segment network connections.
2. Segment network utilizes 1.5 twisted pair, shielded, cable supplied by the lighting control manufacturer. Maximum cable run for each segment is 4,000 feet. Conductor-to-conductor capacitance of the twisted pair shall be less than 30 pf/ft and have a characteristic impedance of 120 Ohms.
3. Network wire jacket is available in high visibility green, white, or black.
4. Substitution of manufacturer-supplied cable is not permitted and may void the warranty, if non-approved cable is installed, and if terminations are not completed according to manufacturer's specific requirements.
5. Network signal integrity requires that each conductor and ground wire be correctly terminated at every connected device.
6. Segment networks shall be capable of connecting to any of the following: BACnet-compliant BAS (provided by others) directly via MS/TP, or BACnet/IP via an LMSM Unit.

2.10 NETWORK BRIDGE

A. Network bridge module connects a local network to a BACnet-compliant segment network for communication between rooms, relay panels and a segment manager or BAS. Each local network shall include a network bridge component to provide a connection to the local network room devices. Network bridge shall use industry standard BACnet MS/TP network communication and an optically isolated EIA/TIA RS-485 transceiver.
   1. Network bridge shall be provided as a separate module connected on the local network through an available RJ-45 port.
   2. Network bridge shall automatically create standard BACnet objects for selected network devices to allow any BACnet-compliant BAS to include lighting control and power monitoring features as provided by the network devices on each local network. BACnet objects will be created for the addition or replacement of any given device for the installed life of the system. Products requiring that an application-specific point database be loaded to create or map BACnet objects are not acceptable. Systems not capable of providing BACnet data for control devices via a dedicated BACnet Device ID and physical MS/TP (or Cat-5E) termination per room are not acceptable. Standard BACnet objects shall be provided as follows:
      a. Read/write the normal or after hours schedule state for the room
      b. Read the detection state of each occupancy sensor
      c. Read the aggregate occupancy state of the room
      d. Read/write the On/Off state of loads
      e. Read/write the dimmed light level of loads
      f. Read the button states of switches
      g. Read total current in amps, and total power in watts through the load controller
      h. Read/write occupancy sensor time delay, PIR sensitivity and ultrasonic sensitivity settings
      i. Activate a preset scene for the room
      j. Read/write daylight sensor fade time and day and night setpoints
      k. Read the current light level, in foot-candles, from interior and exterior photosensors and photocells
      l. Set daylight sensor operating mode
      m. Read/write wall switch lock status
      n. Read watts per square foot for the entire controlled room
      o. Write maximum light level per load for demand response mode
      p. Read/write activation of demand response mode for the room
      q. Activate/restore demand response mode for the room

2.11 SEGMENT MANAGER

A. For networked applications, the Digital Lighting Management system shall include at least one segment manager to manage network communication. It shall be capable of serving up a graphical user interface via a standard web browser utilizing either unencrypted TCP/IP traffic via a configurable port (default is 80) or 256-bit AES encrypted SSL TCP/IP traffic via a configurable port (default is 443).

B. Each segment manager shall have integral support for at least three segment networks. Segment networks may alternately be connected to the segment manger via external BACnet-to-IP interface routers and switches, using standard Ethernet structured wiring. Each router shall accommodate one segment network. Provide the quantity of routers and switches as shown on the Drawings.

C. Operational features of the Segment Manager shall include the following:
   1. Connection to PC or LAN via standard Ethernet TCP/IP via standard Ethernet TCP/IP with the option to use SSL encrypted connections for all traffic.
   2. Easy to learn and use graphical user interface, compatible with Internet Explorer 8, or

equal browser. The Segment Manager shall not require installation of any lighting control software on an end-user PC.

3. Log in security capable of restricting some users to view-only or other limited operations.
4. Segment Manager shall provide two main sets of interface screens - those used to initially configure the unit (referred to as the config screens), and a those used to allow users to dynamic monitor the performance of their system and provide a centralized scheduling interface. Capabilities using the Config Screens shall include:
    a. Automatic discovery of networked devices and relay panels on the segment network(s). Commissioning beyond activation of the discovery function shall not be required to provide communication, monitoring or control of all local networks and lighting control panels.
    b. Allow information for all discovered networked devices to be imported into the Segment Manager via a single XML based site file from the LMCS Software. Importable information can include text descriptions of every networked component and individual loads, and automatic creation of room location information and overall structure of network. Info entered into LMCS should not have to be re-entered manually via keystrokes into the Segment Manager
    c. After discovery, all rooms and panels shall be presented in a standard navigation tree format. Selecting a device from the tree will allow the device settings and operational parameters to be viewed and changed by the user.
    d. Ability to view and modify networked device operational parameters. It shall be possible to set device parameters independently for normal hours and after-hours operation including sensor time delays and sensitivities, and load response to sensor including Manual-On or Auto-On.
    e. Provide capabilities for integration with a BAS via BACnet protocol. At a minimum, the following points shall be available to the BAS via BACnet IP connection to the segment manager: room occupancy state; room schedule mode; room switch lock control; individual occupancy sensor state; room lighting power; room plug-load power; load ON/OFF state; load dimming level; panel channel schedule state; panel relay state; and Segment Manager Group schedule state control. Any of above items shall be capable of being moved into an "Export Table" that will provide any integrator with only the data they need, and by using the Export Table effectively create a firewall between the integrator's request for info and the overall system performance.
5. Capabilities using the Segment Manager's Dashboard Screens shall include:
    a. A dynamic "tile" based interface that allows easy viewing of each individual room's lighting and plug load power consumption, and lighting and plug load power density. Tiles will be automatically organized according to location so a single tile for the building summarizes all information for tiles beneath it on every floor, in every area, in every room. Tiles use three color coded energy target parameters, allowing an owner to quickly identify rooms that are not performing efficiently. Tiles for rooms with occupancy sensors shall include an icon to indicate whether that room is occupied. Tiles shall be clickable, and when clicked the underlying hierarchical level of tiles shall become visible. Tile interface shall be accessible via mouse, or touch screen devices. Tiles shall be created automatically by the segment manager, based on the information found during the device discovery and/or information included in a file imported in from LMCS (such as tagged descriptions for each room) without any custom programming.
    b. Ability to set up schedules for local networks (rooms) and panels. Schedules shall be capable of controlling individual rooms with either on/off or normal hours/after-hours set controlled zones or areas to either a normal hours or after hours mode of operation. Support for annual schedules, holiday schedules and unique date-bound schedules, as well as astro On or astro Off events with offsets. Schedules shall be viable graphically as time bars in a screen set up to

automatically show scheduled events by day, week or month.

6. If shown on the Drawings, Segment Managers shall be integrated into a larger control network by the addition of a Network Supervisor package. The Supervisor is a server level computer running a version of the Segment Manager interface software with dedicated communication and networking capability, able to pull information automatically from each individual Segment Manager in the network. By using a Supervisor, information for individual Segment Managers can be accessed and stored on the Supervisor's hard drive, eliminating the risk of data being overwritten after a few days because of Segment Manager memory limits.
7. Segment Manager shall allow access and control of the overall system database via Native Niagara AX FOX connectivity. Systems that must utilize a Tridium Niagara controller in addition to the programming, scheduling and configuration server are not acceptable.

D. Segment Manager shall support multiple networked rooms as follows:
   1. Support up to 200 network bridges and 1,100 digital in room devices, connected via network routers and switches.

2.12 PROGRAMMING, CONFIGURATION AND DOCUMENTATION SOFTWARE

A. PC-native application for optional programming of detailed technician-level parameter information for all networked products, including all parameters not accessible via BACnet and the handled IR configuration tool. Software must be capable of accessing room-level parameter information globally for many segment networks simultaneously utilizing standard BACnet/IP communication.

B. Additional parameters exposed through this method include but are not limited to:
   1. Occupancy sensor detection LED disable for performance and other aesthetic spaces where blinking LEDs present a distraction.
   2. Six occupancy sensor action behaviors for each controlled load, separately configurable for normal hours and after-hours modes. Modes include: No Action, Follow Off Only, Follow On Only, Follow On and Off, Follow On Only with Override Time Delay, Follow Off Only with Blink Warn Grace Time, Follow On and Off with Blink Warn Grace Time.
   3. Separate fade time adjustments per load for both normal and after hours from 0 - 4 hours.
   4. Configurable occupancy sensor re-trigger grace period from 0 - 4 minutes separate for both normal hours and after hours.
   5. Separate normal hours and after hours per-load button mode with modes including: Do nothing, on only, off only, on and off.
   6. Load control polarity reversal so that on events turn loads off and vice versa.
   7. Per-load DR (demand response) shed level in units of percent.
   8. Load output pulse mode in increments of 1second.
   9. Fade trip point for each load for normal hours and after hours that establishes the dimmer command level at which a switched load closes its relay to allow for staggered On of switched loads in response to a dimmer.

C. Generation of reports at the whole file, partial file, or room level. Reports include but are not limited to:
   1. Device list report: All devices in a project listed by type.
   2. Load binding report: All load controller bindings showing interaction with sensors, switches, and daylighting.
   3. BACnet points report: Per room Device ID report of the valid BACnet points for a given site's BOM.
   4. Room summary report: Device manifest for each room, aggregated by common BOM, showing basic sequence of operations.

5. Device parameter report: Per-room lists of all configured parameters accessible via handheld IR programmer for use with O&M documentation.
6. Scene report: All project scene pattern values not left at defaults (i.e., 1 = all loads 100 percent, 2 = all loads 75 percent, 3 = all loads 50 percent, 4 = all loads 25 percent, 5-16 = same as scene 1).
7. Occupancy sensor report: Basic settings including time delay and sensitivities for all occupancy sensors.

D. Network-wide programming of parameter data in a spreadsheet-like programming environment including but not limited to the following operations:
1. Set, copy/paste an entire project site of sensor time delays.
2. Set, copy/paste an entire project site of sensor sensitivity settings.
3. Search based on room name and text labels.
4. Filter by product type to allow parameter set by product.
5. Filter by parameter value to search for product with specific configurations.

E. Network-wide firmware upgrading remotely via the BACnet/IP network.
1. Mass firmware update of entire rooms.
2. Mass firmware update of specifically selected rooms or areas.
3. Mass firmware upgrade of specific products

2.13 EMERGENCY LIGHTING CONTROL DEVICES

A. Emergency Lighting Control Unit - A UL 924 listed device that monitors a switched circuit providing normal lighting to an area. The unit provides normal ON/OFF control of emergency lighting along with the normal lighting. Upon normal power failure the emergency lighting circuit will close, forcing the emergency lighting ON until normal power is restored. Features include:
1. 120/277 volts, 50/60 Hz, 20 amp rating
2. Push to test button
3. Auxiliary contact for remote test or fire alarm system interface

PART 3 EXECUTION

3.1 PREPARATION

A. Do not begin installation until measurements have been verified and work areas have been properly prepared.

B. If preparation is the responsibility of another installer, notify Architect of unsatisfactory preparation before proceeding.

C. Verify that the required pre-installation meeting specified in Part 1 of this specification has been completed, recorded meeting minutes have been distributed and all outstanding issues noted have been resolved prior to the start of installation.

3.2 INSTALLATION

A. Install system in accordance with the approved system shop drawings and manufacturer's instructions.

B. Install all room/area devices using manufacturer's factory-tested Cat 5e cable with pre-terminated RJ-45 connectors.
1. If pre-terminated cable is not used for room/area wiring, each field-terminated cable shall be tested prior to proceeding with the Work.
2. If fixtures have internal network Control Modules, ensure that they are also connected with Cat 5e cable.

3. Install all room to room network devices using MSTP network wire.
4. Low voltage wiring topology must comply with manufacturer's specifications.
5. Route network wiring as indicated on the Drawings as closely as possible. Document final wiring location, routing and topology on as built drawings.

C. All line voltage connections shall be tagged to indicate circuit and switched legs.

D. Test all devices to ensure proper communication.

E. Calibrate all sensor time delays and sensitivity to guarantee proper detection of occupants and energy savings. Adjust time delay so that controlled area remains lighted while occupied.

F. Provide written or computer-generated documentation on the configuration of the system including room by room description including:
1. Sensor parameters, time delays, sensitivities, and daylighting setpoints.
2. Sequence of operation, (e.g., manual ON, Auto OFF. etc.)
3. Load Parameters (e.g., blink warning, etc.)

G. Post start-up tuning - Adjust sensor time delays and sensitivities to meet the Owner's requirements 30 days from beneficial occupancy. Provide a detailed report to the Architect / Owner of post start-up activity.

H. All Class II cabling shall enter enclosures from within low-voltage wiring areas and shall remain within those areas. No Class I conductors shall enter a low-voltage area.

I. Run separate neutrals for any phase dimmed branch load circuit. Different types of dimming loads shall have separate neutral.

J. Verify all non-panel-based lighting loads to be free from short circuits prior to connection to room controllers.

3.3 FIELD QUALITY CONTROL

A. Tests and Inspections: Manufacturer's service representative shall perform the following inspections and prepare reports.
1. Verify Class I and II wiring connections are terminated properly by validating system performance.
2. Set IP addresses and other network settings of system front end hardware per facilities IT instructions.
3. Verify / complete task programming for all switches, dimmers, time clocks, and sensors.
4. Verify that the control of each space complies with the Sequence of Operation.
5. Correct any system issues and retest.

B. Provide a report in table format with drawings or using a software file that can be opened in the manufacturer's system software including each room or space that has lighting control installed. Indicate the following:
1. Date of test or inspection.
2. Loads per space, or Fixture Address identification.
3. Quantity and Type of each device installed
4. Reports providing each device's settings.

3.4 POST OCCUPANCY QUALITY CONTROL

A. Convene at a maximum of 30-days after beneficial occupancy. Meeting to be attended by Contractor, Architect, system installer, factory authorized manufacturer's representative, and

representative of all trades related to the system installation.

B. Post occupancy tuning - Adjust sensor time delays and sensitivities to meet the Owner's requirements. Update any adjustments to the field quality control report and return an updated copy to the Architect / Owner of any post occupancy activity.

3.5 SOFTWARE SERVICE AGREEMENT

a. Technical Support: Beginning at Substantial Completion, service agreement shall include software support for two years.

b. Upgrade Service: At Substantial Completion, update software to latest version. Install and program software upgrades that become available within two years from date of Substantial Completion. Upgrading software shall include operating system and new or revised licenses for using software.

1) Upgrade Notice: At least 30 days to allow Owner to schedule and access the system and to upgrade computer equipment if necessary.

3.6 DEMONSTRATION AND TRAINING

A. Before Substantial Completion, arrange and provide a one-day Owner instruction period to designated Owner personnel. Set-up, starting of the lighting control system and Owner instruction includes:
1. Confirmation of entire system operation and communication to each device.
2. Confirmation of operation of individual relays, switches, and sensors.
3. Confirmation of system Programming, photocell settings, override settings, etc.
4. Provide training to cover installation, programming, operation, and troubleshooting of the lighting control system.

3.7 PRODUCT SUPPORT AND SERVICE

A. Factory telephone support shall be available at no cost to the Owner following acceptance. Factory assistance shall consist of assistance in solving application issues pertaining to the control equipment.

END OF SECTION 260943

SECTION 262416 - PANELBOARDS

PART 1 - GENERAL

1.1 SUMMARY

A. Section Includes:

1. Distribution panelboards.
2. Lighting and appliance branch-circuit panelboards.

1.2 DEFINITIONS

A. MCCB: Molded-case circuit breaker.

B. SPD: Surge protective device.

1.3 ACTION SUBMITTALS

A. Product Data: For each type of panelboard.

B. Shop Drawings: For each panelboard and related equipment.

1. Include dimensioned plans, elevations, sections, and details.
2. Detail enclosure types including mounting and anchorage, environmental protection, knockouts, corner treatments, covers and doors, gaskets, hinges, and locks.
3. Detail bus configuration, current, and voltage ratings.
4. Short-circuit current rating of panelboards and overcurrent protective devices.
5. Include evidence of NRTL listing for series rating of installed devices.
6. Include evidence of NRTL listing for SPD as installed in panelboard.
7. Detail features, characteristics, ratings, and factory settings of individual overcurrent protective devices and auxiliary components.
8. Include wiring diagrams for power, signal, and control wiring.
9. Key interlock scheme drawing and sequence of operations.
10. Include time-current coordination curves for each type and rating of overcurrent protective device included in panelboards.

1.4 INFORMATIONAL SUBMITTALS

A. Panelboard schedules for installation in panelboards.

1.5 CLOSEOUT SUBMITTALS

A. Operation and maintenance data.

1.6 WARRANTY

A. Manufacturer's Warranty: Manufacturer agrees to repair or replace panelboards that fail in materials or workmanship within specified warranty period.

1. Panelboard Warranty Period: 18 months from date of Substantial Completion.

PART 2 - PRODUCTS

2.1 PANELBOARDS COMMON REQUIREMENTS

A. Electrical Components, Devices, and Accessories: Listed and labeled as defined in NFPA 70, by a qualified testing agency, and marked for intended location and application.

B. Comply with NEMA PB 1.

C. Comply with NFPA 70.

D. Enclosures: Flush and/or Surface-mounted, as indicated on Drawings, dead-front cabinets.

1. Rated for environmental conditions at installed location.
   a. Indoor Dry and Clean Locations: NEMA 250, Type 1.
   b. Outdoor Locations: NEMA 250, Type 3R.
   c. **Kitchen or Wash-Down** Areas: NEMA 250, Type 3R.
   d. Wet or Damp Indoor Locations: NEMA 250, Type 4.
   e. Indoor Locations Subject to Dust, Falling Dirt, and Dripping Noncorrosive Liquids: NEMA 250, Type 12.
2. Height: 84 inches (2.13 m) maximum.
3. Hinged Front Cover: Entire front trim hinged to box and with standard door within hinged trim cover. Trims shall cover all live parts and shall have no exposed hardware.

E. Phase, Neutral, and Ground Buses: Tin-plated aluminum or Silver-plated hard-drawn copper, 98 percent conductivity.

F. Conductor Connectors: Suitable for use with conductor material and sizes.

1. Material: Tin-plated aluminum or Silver-plated hard-drawn copper, 98 percent conductivity.
2. Main and Neutral Lugs: Compression or Mechanical type, with a lug on the neutral bar for each pole in the panelboard.
3. Ground Lugs and Bus-Configured Terminators: Compression or Mechanical type, with a lug on the bar for each pole in the panelboard.
4. Feed-Through Lugs: Compression or Mechanical type, suitable for use with conductor material. Locate at opposite end of bus from incoming lugs or main device.
5. Subfeed (Double) Lugs: Compression or Mechanical type suitable for use with conductor material. Locate at same end of bus as incoming lugs or main device.

G. NRTL Label: Panelboards shall be labeled by an NRTL acceptable to authority having jurisdiction for use as service equipment with one or more main service disconnecting and overcurrent protective devices.

H. Future Devices: Panelboards shall have mounting brackets, bus connections, filler plates, and necessary appurtenances required for future installation of devices.

I. Panelboard Short-Circuit Current Rating: Fully rated to interrupt symmetrical short-circuit current available at terminals. Assembly listed by an NRTL for 100 percent interrupting capacity.

2.2 PERFORMANCE REQUIREMENTS

A. Surge Suppression: Factory installed as an integral part of indicated panelboards, complying with UL 1449 SPD Type 1 or Type 2.

2.3 POWER PANELBOARDS

A. Manufacturers: Subject to compliance with requirements, provide products by one of the following:

1. Square D, a division of Schneider Electric
2. G.E., a division of ABB
3. Siemens Energy & Automation, Inc.
4. Eaton Corporation, Cutler-Hammer Products

B. Panelboards: NEMA PB 1, distribution type.

C. Doors: Secured with vault-type latch with tumbler lock; keyed alike.

1. For doors more than 36 inches (914 mm) high, provide two latches, keyed alike.

D. Branch Overcurrent Protective Devices for Circuit-Breaker Frame Sizes 125 A and Smaller: Bolt-on circuit breakers.

E. Branch Overcurrent Protective Devices for Circuit-Breaker Frame Sizes Larger Than 125 A: Bolt-on circuit breakers.

2.4 LIGHTING AND APPLIANCE BRANCH-CIRCUIT PANELBOARDS

A. Manufacturers: Subject to compliance with requirements, provide products by one of the following:

1. Square D, a division of Schneider Electric
2. G.E., a division of ABB
3. Siemens Energy & Automation, Inc.
4. Eaton Corporation, Cutler-Hammer Products

B. Panelboards: NEMA PB 1, lighting and appliance branch-circuit type.

C. Branch Overcurrent Protective Devices: Bolt-on circuit breakers, replaceable without disturbing adjacent units.

D. Doors: Concealed hinges; secured with flush latch with tumbler lock; keyed alike.

2.5 DISCONNECTING AND OVERCURRENT PROTECTIVE DEVICES

A. Manufacturers: Subject to compliance with requirements, provide products by one of the following:

1. Square D, a division of Schneider Electric
2. G.E., a division of ABB
3. Siemens Energy & Automation, Inc.
4. Eaton Corporation, Cutler-Hammer Products

B. MCCB: Comply with UL 489, with interrupting capacity to meet available fault currents.

1. Thermal-Magnetic Circuit Breakers:
   a. Inverse time-current element for low-level overloads.
   b. Instantaneous magnetic trip element for short circuits.
   c. Adjustable magnetic trip setting for circuit-breaker frame sizes 200 A and larger.
2. Adjustable Instantaneous-Trip Circuit Breakers: Magnetic trip element with front-mounted, field-adjustable trip setting.
3. Electronic Trip Circuit Breakers:
   a. RMS sensing.
   b. Field-replaceable rating plug or electronic trip.
   c. Digital display of settings, trip targets, and indicated metering displays.
   d. Multi-button keypad to access programmable functions and monitored data.
   e. Ten-event, trip-history log. Each trip event shall be recorded with type, phase, and magnitude of fault that caused the trip.
   f. Integral test jack for connection to portable test set or laptop computer.
   g. Field-Adjustable Settings:
      1) Instantaneous trip.
      2) Long- and short-time pickup levels.
      3) Long and short time adjustments.
      4) Ground-fault pickup level, time delay, and I squared T response.
4. Current-Limiting Circuit Breakers: Frame sizes 400 A and smaller; let-through ratings less than NEMA FU 1, RK-5.
5. GFCI Circuit Breakers: Single- and double-pole configurations with Class A ground-fault protection (6-mA trip).
6. GFEP Circuit Breakers: Class B ground-fault protection (30-mA trip).
7. Arc-Fault Circuit Interrupter Circuit Breakers: Comply with UL 1699; 120/240-V, single-pole configuration.
8. Subfeed Circuit Breakers: Vertically mounted.
9. MCCB Features and Accessories:
   a. Standard frame sizes, trip ratings, and number of poles.
   b. Breaker handle indicates tripped status.
   c. UL listed for reverse connection without restrictive line or load ratings.
   d. Lugs: Compression or Mechanicalstyle, suitable for number, size, trip ratings, and conductor materials.
   e. Application Listing: Appropriate for application; Type SWD for switching fluorescent lighting loads; Type HID for feeding fluorescent and HID lighting circuits.
   f. Ground-Fault Protection: Integrally mounted or Remote-mounted relay and trip unit with adjustable pickup and time-delay settings, push-to-test feature, and ground-fault indicator.
   g. Communication Capability: Circuit-breaker-mounted, Universal-mounted, or Din-rail-mounted communication module with functions and features compatible with power monitoring and control system specified in Section 260913 "Electrical Power Monitoring and Control."
   h. Shunt Trip: 120-V trip coil energized from separate circuit, set to trip at 55 percent of rated voltage.

2.6 IDENTIFICATION

A. Panelboard Label: Manufacturer's name and trademark, voltage, amperage, number of phases, and number of poles shall be located on the interior of the panelboard door.

B. Breaker Labels: Faceplate shall list current rating, UL and IEC certification standards, and AIC rating.

C. Circuit Directory: Directory card inside panelboard door, mounted in transparent card holder.

PART 3 - EXECUTION

3.1 INSTALLATION

A. Comply with NECA 1.

B. Install panelboards and accessories according to NECA 407.

C. Mount panels at height above finished floor so that no operating handle of switch or circuit breaker in the on position is higher than 79 inches (2000 mm).

D. Mount panelboard cabinet plumb and rigid without distortion of box.

E. Mount recessed panelboards with fronts uniformly flush with wall finish and mating with back box.

F. Install overcurrent protective devices and controllers not already factory installed.
   1. Set field-adjustable, circuit-breaker trip ranges.

G. Make grounding connections and bond neutral for services and separately derived systems to ground. Make connections to grounding electrodes, separate grounds for isolated ground bars, and connections to separate ground bars.

H. Install filler plates in unused spaces.

I. Stub four 1-inch (27-EMT) empty conduits from panelboard into accessible ceiling space if so constructed or space designated to be ceiling space in the future. Stub four 1-inch (27-EMT) empty conduits into raised floor space or below slab not on grade.

J. Arrange conductors in gutters into groups and bundle and wrap with wire ties.

3.2 IDENTIFICATION

A. Identify field-installed conductors, interconnecting wiring, and components; install warning signs complying with requirements in "Identification for Electrical Systems."

B. Create a directory to indicate installed circuit loads; incorporate Owner's final room designations. Obtain approval before installing. Handwritten directories are not acceptable. Install directory inside panelboard door.

C. Panelboard Nameplates: Label each panelboard with a nameplate complying with requirements for identification specified in "Identification for Electrical Systems."

D. Device Nameplates: Label each branch circuit device in power panelboards with a nameplate complying with requirements for identification specified in "Identification for Electrical Systems."

E. Install warning signs complying with requirements in "Identification for Electrical Systems" identifying source of remote circuit.

3.3 FIELD QUALITY CONTROL

A. Perform tests and inspections.

B. Acceptance Testing Preparation:

1. Test insulation resistance for each panelboard bus, component, connecting supply, feeder, and control circuit.
2. Test continuity of each circuit.

C. Tests and Inspections:

1. Perform each visual and mechanical inspection and electrical test for low-voltage air circuit breakers stated in NETA ATS. Certify compliance with test parameters.
2. Correct malfunctioning units on-site, where possible, and retest to demonstrate compliance; otherwise, replace with new units and retest.

D. Panelboards will be considered defective if they do not pass tests and inspections.

E. Prepare test and inspection reports, including a certified report that identifies panelboards included and that describes scanning results, with comparisons of the two scans. Include notation of deficiencies detected, remedial action taken, and observations after remedial action.

END OF SECTION 262416

SECTION 262726 - WIRING DEVICES

PART 1 - GENERAL

1.1 RELATED DOCUMENTS

A. Drawings and general provisions of the Contract, including General and Supplementary Conditions Specification Sections, apply to this Section.

1.2 SUMMARY

A. Section Includes:

1. Standard-grade receptacles, 125 V, 20 A.
2. USB receptacles.
3. GFCI receptacles, 125 V, 20 A.
4. SPD receptacles, 125 V, 20 A.
5. Twist-locking receptacles.
6. Toggle switches.
7. Wall-box dimmers.
8. Wall plates.
9. Floor service fittings.

1.3 DEFINITIONS

A. BAS: Building automation system.

B. EMI: Electromagnetic interference.

C. GFCI: Ground-fault circuit interrupter.

D. Pigtail: Short lead used to connect a device to a branch-circuit conductor.

E. RFI: Radio-frequency interference.

F. SPD: Surge protective device.

1.4 ACTION SUBMITTALS

A. Product Data: For each type of product.

B. Shop Drawings: List of legends and description of materials and process used for premarking wall plates.

C. Samples: One for each type of device and wall plate specified, in each color specified.

1.5 INFORMATIONAL SUBMITTALS

A. Field quality-control reports.

1.6 CLOSEOUT SUBMITTALS

A. Operation and Maintenance Data: For wiring devices to include in all manufacturers' packing-label warnings and instruction manuals that include labeling conditions.

1.7 MAINTENANCE MATERIAL SUBMITTALS

A. Furnish extra materials that match products installed and that are packaged with protective covering for storage and identified with labels describing contents.

1. Poke-Through, Fire-Rated Closure Plugs: One for every five floor service outlets installed, but no fewer than two.
2. SPD Receptacles: One for every 10 of each type installed, but no fewer than one of each type.

PART 2 - PRODUCTS

2.1 MANUFACTURERS

A. Subject to compliance with requirements, provide products by one of the following:

B. Wiring Devices:

1. Bryant Electric, Inc., Hubbell Subsidiary.
2. Eagle Electric Manufacturing Co.
3. Hubbell Incorporated; Wiring Device-Kellems.
4. Leviton Mfg Company
5. Pass & Seymour/Legrand; Wiring Devices Div.

2.2 GENERAL WIRING-DEVICE REQUIREMENTS

A. Wiring Devices, Components, and Accessories: Listed and labeled as defined in NFPA 70, by a qualified testing agency, and marked for intended location and use.

B. Comply with NFPA 70.

C. RoHS compliant.

D. Comply with NEMA WD 1.

E. Device Color:

1. Wiring Devices Connected to Normal Power System: As selected by Architect unless otherwise indicated or required by NFPA 70 or device listing.
2. Wiring Devices Connected to Essential Electrical System: Red.

3. SPD Devices: Blue.

F. Wall Plate Color: For plastic covers, match device color.

G. Source Limitations: Obtain each type of wiring device and associated wall plate from single source from single manufacturer.

2.3 STANDARD-GRADE RECEPTACLES, 125 V, 20 A

A. Duplex Receptacles, 125 V, 20 A:

1. Description: Two pole, three wire, and self-grounding.
2. Configuration: NEMA WD 6, Configuration 5-20R.
3. Standards: Comply with UL 498 and FS W-C-596.

B. Tamper-Resistant Duplex Receptacles, 125 V, 20 A:

1. Description: Two pole, three wire, and self-grounding. Integral shutters that operate only when a plug is inserted in the receptacle.
2. Configuration: NEMA WD 6, Configuration 5-20R.
3. Standards: Comply with UL 498 and FS W-C-596.
4. Marking: Listed and labeled as complying with NFPA 70, "Tamper-Resistant Receptacles" Article.

C. Weather-Resistant Duplex Receptacle, 125 V, 20 A:

1. Description: Two pole, three wire, and self-grounding. Integral shutters that operate only when a plug is inserted in the receptacle. Square face.
2. Configuration: NEMA WD 6, Configuration 5-20R.
3. Standards: Comply with UL 498.
4. Marking: Listed and labeled as complying with NFPA 70, "Receptacles in Damp or Wet Locations" Article.

2.4 USB RECEPTACLES

A. USB Charging Receptacles:

1. Description: Single piece, rivetless, nickel-plated, all-brass grounding system. Nickel-plated, brass mounting strap.
2. USB Receptacles: Dual, USB Type A and Type-C, 5 V dc, and 2.4 A per receptacle (minimum).
3. Standards: Comply with UL 1310 and USB 3.0 devices.

B. Tamper-Resistant Duplex and USB Charging Receptacles:

1. Description: Single piece, rivetless, nickel-plated, all-brass grounding system. Nickel-plated, brass mounting strap. Integral shutters that operate only when a plug is inserted in the line voltage receptacle.
2. Line Voltage Receptacles: Two pole, three wire, and self-grounding; NEMA WD 6, Configuration 5-20R.
3. USB Receptacles: Dual, USB Type A and Type-C, 5 V dc, and 2.4 A per receptacle (minimum).
4. Standards: Comply with UL 498, UL 1310, USB 3.0 devices, and FS W-C-596.

5. Marking: Listed and labeled as complying with NFPA 70, "Tamper-Resistant Receptacles" Article.

2.5 GFCI RECEPTACLES, 125 V, 20 A

A. Duplex GFCI Receptacles, 125 V, 20 A:

1. Description: Integral GFCI with "Test" and "Reset" buttons and LED indicator light. Two pole, three wire, and self-grounding.
2. Configuration: NEMA WD 6, Configuration 5-20R.
3. Type: Non-feed through.
4. Standards: Comply with UL 498, UL 943 Class A, and FS W-C-596.

B. Tamper-Resistant Duplex GFCI Receptacles, 125 V, 20 A:

1. Description: Integral GFCI with "Test" and "Reset" buttons and LED indicator light. Two pole, three wire, and self-grounding. Integral shutters that operate only when a plug is inserted in the receptacle.
2. Configuration: NEMA WD 6, Configuration 5-20R.
3. Type: Non-feed through.
4. Standards: Comply with UL 498, UL 943 Class A, and FS W-C-596.
5. Marking: Listed and labeled as complying with NFPA 70, "Tamper-Resistant Receptacles" Article.

C. Tamper- and Weather-Resistant, GFCI Duplex Receptacles, 125 V, 20 A:

1. Description: Integral GFCI with "Test" and "Reset" buttons and LED indicator light. Two pole, three wire, and self-grounding. Integral shutters that operate only when a plug is inserted in the receptacle. Square face.
2. Configuration: NEMA WD 6, Configuration 5-20R.
3. Type: Non-feed through.
4. Standards: Comply with UL 498 and UL 943 Class A.
5. Marking: Listed and labeled as complying with NFPA 70, "Tamper-Resistant Receptacles" and "Receptacles in Damp or Wet Locations" articles.

D. Weather-Resistant, GFCI Duplex Receptacles, 125 V, 20 A:

1. Description: Integral GFCI with "Test" and "Reset" buttons and LED indicator light. Two pole, three wire, and self-grounding.
2. Configuration: NEMA WD 6, Configuration 5-20R.
3. Type: Non-feed through.
4. Standards: Comply with UL 498 and UL 943 Class A.
5. Marking: Listed and labeled as complying with NFPA 70, "Receptacles in Damp or Wet Locations" article.

2.6 SPD RECEPTACLES, 125 V, 20 A

A. Duplex SPD Receptacles, 125 V, 20 A:

1. Description: Two pole, three wire, and self-grounding. Integral SPD in line to ground, line to neutral, and neutral to ground. LED indicator light.

2. SPD Components: Multiple metal-oxide varistors; with a nominal clamp-level rating of 400 V and minimum single transient pulse energy dissipation of 240 J, according to IEEE C62.41.2 and IEEE C62.45.
3. Active SPD Indication: Visual and audible, with light visible in face of device to indicate device is "active" or "no longer in service."
4. Configuration: NEMA WD 6, Configuration 5-20R.
5. Standards: Comply with NEMA WD 1, UL 498, UL 1449, and FS W-C-596.

2.7 TWIST-LOCKING RECEPTACLES

A. Twist-Lock, Single Receptacles, 250 V, 20 A,30A, 50A, and 60A (as indicated on drawings):

1. Configuration: As indicated on drawings or to match equipment plug.
2. Standards: Comply with UL 498.

2.8 TOGGLE SWITCHES, 120/277 V, 20 A

A. Two-Pole Switches, 120/277 V, 20 A: Comply with UL 20 and FS W-S-896.

B. Three-Way Switches, 120/277 V, 20 A: Comply with UL 20 and FS W-S-896.

C. Four-Way Switches, 120/277 V, 20 A: Standards: Comply with UL 20 and FS W-S-896.

D. Lighted Single-Pole Switches, 120/277 V, 20 A:

1. Description: Handle illuminated when switch is off.
2. Standards: Comply with NEMA WD 1, UL 20, and FS W-S-896.

2.9 DIMMERS

A. Wall-Box Dimmers:

1. <Double click here to find, evaluate, and insert list of manufacturers and products.>
2. Description: Modular, full-wave, solid-state dimmer switch with integral, quiet on-off switches, with audible frequency and EMI/RFI suppression filters.
3. Control: Continuously adjustable slider; with single-pole or three-way switching.
4. Standards: Comply with UL 1472.
5. Retain "Incandescent Lamp Dimmers," "Fluorescent Lamp Dimmer Switches," or "LED Lamp Dimmer Switches" Subparagraph below. Coordinate dimmer type with lamp type.

6. Incandescent Lamp Dimmers: 120 V; control shall follow square-law dimming curve. On-off switch positions shall bypass dimmer module, dimmers shall require no derating when ganged with other devices.
7. LED Lamp Dimmer Switches: Modular; compatible with LED lamps; trim potentiometer to adjust low-end dimming; capable of consistent dimming with low end not greater than 5 percent of full brightness.

2.10 WALL PLATES

A. Single Source: Obtain wall plates from same manufacturer of wiring devices.

B. Single and combination types shall match corresponding wiring devices.

1. Plate-Securing Screws: Metal with head color to match plate finish.
2. Material for Finished Spaces: 0.035-inch- (1-mm-) thick, satin-finished, Type 302 stainless steel.
3. Material for Unfinished Spaces: Galvanized steel.
4. Material for Damp Locations: Cast aluminum with spring-loaded lift cover, and listed and labeled for use in wet and damp locations.

C. Wet-Location, Weatherproof Cover Plates: NEMA 250, complying with Type 3R, weather-resistant, thermoplastic with lockable while in-use cover.

2.11 FLOOR SERVICE FITTINGS

A. Above-Floor Service Fittings:

1. Description: Type: Modular, above-floor, dual-service units suitable for wiring method used.
2. Service Plate: Rectangular satin finish.
3. Power Receptacle: NEMA WD 6 Configuration 5-20R, gray finish, unless otherwise indicated.

PART 3 - EXECUTION

3.1 INSTALLATION

A. Comply with NECA 1, including mounting heights listed in that standard, unless otherwise indicated.

B. Coordination with Other Trades:

1. Protect installed devices and their boxes. Do not place wall finish materials over device boxes, and do not cut holes for boxes with routers that are guided by riding against outside of boxes.
2. Keep outlet boxes free of plaster, drywall joint compound, mortar, cement, concrete, dust, paint, and other material that may contaminate the raceway system, conductors, and cables.
3. Install device boxes in brick or block walls so that the cover plate does not cross a joint unless the joint is troweled flush with the face of the wall.
4. Install wiring devices after all wall preparation, including painting, is complete.

C. Conductors:

1. Do not strip insulation from conductors until right before they are spliced or terminated on devices.
2. Strip insulation evenly around the conductor using tools designed for the purpose. Avoid scoring or nicking of solid wire or cutting strands from stranded wire.
3. The length of free conductors at outlets for devices shall comply with NFPA 70, Article 300, without pigtails.
4. Existing Conductors:
   a. Cut back and pigtail or replace all damaged conductors.
   b. Straighten conductors that remain and remove corrosion and foreign matter.
   c. Pigtailing existing conductors is permitted, provided the outlet box is large enough.

D. Device Installation:

1. Replace devices that have been in temporary use during construction and that were installed before building finishing operations were complete.
2. Keep each wiring device in its package or otherwise protected until it is time to connect conductors.
3. Do not remove surface protection, such as plastic film and smudge covers, until the last possible moment.
4. Connect devices to branch circuits using pigtails that are not less than 6 inches (152 mm) in length.
5. When there is a choice, use side wiring with binding-head screw terminals. Wrap solid conductor tightly clockwise, two-thirds to three-fourths of the way around terminal screw.
6. Use a torque screwdriver when a torque is recommended or required by manufacturer.
7. When conductors larger than No. 12 AWG are installed on 15- or 20-A circuits, splice No. 12 AWG pigtails for device connections.
8. Tighten unused terminal screws on the device.
9. When mounting into metal boxes, remove the fiber or plastic washers used to hold device-mounting screws in yokes, allowing metal-to-metal contact.

E. Receptacle Orientation:

1. Install ground pin of vertically mounted receptacles down, and on horizontally mounted receptacles to the right.
2. Install hospital-grade receptacles in patient-care areas with the ground pin or neutral blade at the top.

F. Device Plates: Do not use oversized or extra-deep plates. Repair wall finishes and remount outlet boxes when standard device plates do not fit flush or do not cover rough wall opening.

G. Dimmers:

1. Install dimmers within terms of their listing.
2. Verify that dimmers used for fan-speed control are listed for that application.
3. Install unshared neutral conductors on line and load side of dimmers according to manufacturers' device, listing conditions in the written instructions.

H. Arrangement of Devices: Unless otherwise indicated, mount flush, with long dimension vertical and with grounding terminal of receptacles on bottom. Group adjacent switches under single, multigang wall plates.

3.2 GFCI RECEPTACLES

A. Install non-feed-through GFCI receptacles where protection of downstream receptacles is not required.

3.3 IDENTIFICATION

A. Comply with Section 260553 "Identification for Electrical Systems."

B. Identify each receptacle with panelboard identification and circuit number. Use hot, stamped, or engraved machine printing with black-filled lettering on face of plate, and durable wire markers or tags inside outlet boxes.

C. Essential Electrical System: Mark receptacles supplied from the essential electrical system to allow easy identification using a self-adhesive label.

3.4 FIELD QUALITY CONTROL

A. Perform the following tests and inspections:

1. In healthcare facilities, prepare reports that comply with NFPA 99.
2. Test Instruments: Use instruments that comply with UL 1436.
3. Test Instrument for Receptacles: Digital wiring analyzer with digital readout or illuminated digital-display indicators of measurement.

B. Tests for Receptacles:

1. Line Voltage: Acceptable range is 105 to 132 V.
2. Percent Voltage Drop under 15-A Load: A value of 6 percent or higher is unacceptable.
3. Ground Impedance: Values of up to 2 ohms are acceptable.
4. GFCI Trip: Test for tripping values specified in UL 1436 and UL 943.
5. Using the test plug, verify that the device and its outlet box are securely mounted.

C. Wiring device will be considered defective if it does not pass tests and inspections.

D. Prepare test and inspection reports.

END OF SECTION 262726

SECTION 26 28 16 - ENCLOSED SWITCHES AND CIRCUIT BREAKERS

PART 1 - GENERAL

1.1 SUMMARY

A. Section Includes:

1. Fusible switches.
2. Nonfusible switches.
3. Receptacle switches.
4. Shunt trip switches.
5. Molded-case circuit breakers (MCCBs).
6. Molded-case switches.
7. Enclosures.

1.2 DEFINITIONS

A. NC: Normally closed.

B. NO: Normally open.

C. SPDT: Single pole, double throw.

D. DPST: double pole single throw

1.3 ACTION SUBMITTALS

A. Product Data: For each type of enclosed switch, circuit breaker, accessory, and component indicated. Include nameplate ratings, dimensioned elevations, sections, weights, and manufacturers' technical data on features, performance, electrical characteristics, ratings, accessories, and finishes.

1. Enclosure types and details for types other than NEMA 250, Type 1.
2. Current and voltage ratings.
3. Short-circuit current ratings (interrupting and withstand, as appropriate).
4. Detail features, characteristics, ratings, and factory settings of individual overcurrent protective devices, accessories, and auxiliary components.
5. Include time-current coordination curves (average melt) for each type and rating of overcurrent protective device; include selectable ranges for each type of overcurrent protective device. Provide in PDF and SKM electronic format.

B. Shop Drawings: For enclosed switches and circuit breakers.

1. Include plans, elevations, sections, details, and attachments to other work.
2. Include wiring diagrams for power, signal, and control wiring.

1.4 INFORMATIONAL SUBMITTALS

A. Qualification Data: For qualified testing agency.

B. Field quality-control reports.

1.5 CLOSEOUT SUBMITTALS

A. Operation and Maintenance Data: For enclosed switches and circuit breakers to include in emergency, operation, and maintenance manuals.

1. Include the following:

a. Manufacturer's written instructions for testing and adjusting enclosed switches and circuit breakers.
b. Time-current coordination curves (average melt) for each type and rating of overcurrent protective device; include selectable ranges for each type of overcurrent protective device. Provide in PDF and SKM format electronic format.

1.6 MAINTENANCE MATERIAL SUBMITTALS

A. Furnish extra materials that match products installed and that are packaged with protective covering for storage and identified with labels describing contents.

1.7 QUALITY ASSURANCE

A. Testing Agency Qualifications: Accredited by NETA.

1. Testing Agency's Field Supervisor: Currently certified by NETA to supervise on-site testing.

1.8 FIELD CONDITIONS

A. Environmental Limitations: Rate equipment for continuous operation under the following conditions unless otherwise indicated:

1. Ambient Temperature: Not less than minus 22 deg F (minus 30 deg C) and not exceeding 104 deg F (40 deg C).
2. Altitude: Not exceeding 6600 feet (2010 m).

1.9 WARRANTY

A. Manufacturer's Warranty: Manufacturer and Installer agree to repair or replace components that fail in materials or workmanship within specified warranty period.

1. Warranty Period: One year(s) from date of Substantial Completion.

PART 2 - PRODUCTS

2.1 GENERAL REQUIREMENTS

A. Source Limitations: Obtain enclosed switches and circuit breakers, overcurrent protective devices, components, and accessories, within same product category, from single manufacturer.

B. Product Selection for Restricted Space: Drawings indicate maximum dimensions for enclosed switches and circuit breakers, including clearances between enclosures, and adjacent surfaces and other items. Comply with indicated maximum dimensions.

C. Electrical Components, Devices, and Accessories: Listed and labeled as defined in NFPA 70, by an NRTL, and marked for intended location and application.

D. Comply with NFPA 70.

2.2 MANUFACTURERS

A. Subject to compliance with requirements, provide products by one of the following:

1. Square D, a division of Schneider Electric
2. G.E., a division of ABB
3. Siemens Energy & Automation, Inc.
4. Eaton Corporation, Cutler-Hammer Products

2.3 NONFUSIBLE SWITCHES

A. Type GD, General Duty, Three Pole, Single Throw, 240-V ac, 600 A and Smaller: UL 98 and NEMA KS 1, horsepower rated, lockable handle with capability to accept two padlocks, and interlocked with cover in closed position.

B. Type HD, Heavy Duty, Three Pole, Single Throw, 600-V ac, 1200 A and Smaller: UL 98 and NEMA KS 1, horsepower rated, lockable handle with capability to accept three padlocks, and interlocked with cover in closed position.

C. Accessories:

1. Equipment Ground Kit: Internally mounted and labeled for copper and aluminum ground conductors.
2. Neutral Kit: Internally mounted; insulated, capable of being grounded and bonded; labeled for copper and aluminum neutral conductors.
3. Hookstick Handle: Allows use of a hookstick to operate the handle.
4. Lugs: Mechanical type, suitable for number, size, and conductor material.

2.4 SHUNT TRIP SWITCHES

A. General Requirements: Comply with ASME A17.1, UL 50, and UL 98, with Class J fuse block and 200-kA interrupting and short-circuit current rating.

B. Type HD, Heavy-Duty, Three Pole, Single-Throw Fusible Switch: 600-V ac, 100A; UL 98 and NEMA KS 1; integral shunt trip mechanism; horsepower rated, with clips or bolt pads to

accommodate specified fuses; lockable handle with capability to accept three padlocks; interlocked with cover in closed position.

C. Type HD, Heavy-Duty, Three Pole, Single-Throw Nonfusible Switch: 600-V ac, 100A; UL 98 and NEMA KS 1; integral shunt trip mechanism; horsepower rated, lockable handle with capability to accept three padlocks; interlocked with cover in closed position.

D. Control Circuit: 120-V ac; obtained from integral control power transformer, with primary and secondary fuses, with a control power transformer of enough capacity to operate shunt trip, pilot, indicating and control devices.

E. Accessories:

1. Oiltight key switch for key-to-test function.
2. Oiltight red ON pilot light.
3. Isolated neutral lug; 100 percent rating.
4. Mechanically interlocked auxiliary contacts that change state when switch is opened and closed.
5. Form C alarm contacts that change state when switch is tripped.
6. Three-pole, double-throw, fire-safety and alarm relay; 120-V ac coil voltage.
7. Three-pole, double-throw, fire-alarm voltage monitoring relay complying with NFPA 72.
8. Neutral Kit: Internally mounted; insulated, capable of being grounded and bonded; labeled for copper and aluminum neutral conductors.
9. Isolated Ground Kit: Internally mounted; insulated, labeled for copper and aluminum neutral conductors.
10. Class R Fuse Kit: Provides rejection of other fuse types when Class R fuses are specified.
11. Auxiliary Contact Kit: Two NO/NC (Form "C") auxiliary contact(s), arranged to activate before switch blades open. Contact rating – as required.
12. Hookstick Handle: Allows use of a hookstick to operate the handle.
13. Lugs: Mechanical type, suitable for number, size, and conductor material.
14. Service-Rated Switches: Labeled for use as service equipment.

2.5 ENCLOSURES

A. Enclosed Switches and Circuit Breakers: UL 489, NEMA KS 1, NEMA 250, and UL 50, to comply with environmental conditions at installed location.

B. Enclosure Finish: The enclosure shall be finished with gray baked enamel paint, electrodeposited on cleaned, phosphatized steel (NEMA 250 Type 1) or gray baked enamel paint, electrodeposited on cleaned, phosphatized galvannealed steel (NEMA 250 Types 3R, 12).

C. Operating Mechanism: The circuit-breaker operating handle shall be directly operable through the front cover of the enclosure (NEMA 250 Type 1) or directly operable through the dead front trim of the enclosure (NEMA 250 Type 3R). The cover interlock mechanism shall have an externally operated override. The override shall not permanently disable the interlock mechanism, which shall return to the locked position once the override is released. The tool used to override the cover interlock mechanism shall not be required to enter the enclosure in order to override the interlock.

PART 3 - EXECUTION

3.1 EXAMINATION

A. Examine elements and surfaces to receive enclosed switches and circuit breakers for compliance with installation tolerances and other conditions affecting performance of the Work.

B. Proceed with installation only after unsatisfactory conditions have been corrected.

1. Commencement of work shall indicate Installer's acceptance of the areas and conditions as satisfactory.

3.2 ENCLOSURE ENVIRONMENTAL RATING APPLICATIONS

A. Enclosed Switches and Circuit Breakers: Provide enclosures at installed locations with the following environmental ratings.

1. Indoor, Dry and Clean Locations: NEMA 250, Type 1.
2. Outdoor Locations: NEMA 250, Type 3R.

3.3 INSTALLATION

A. Coordinate layout and installation of switches, circuit breakers, and components with equipment served and adjacent surfaces. Maintain required workspace clearances and required clearances for equipment access doors and panels.

B. Install individual wall-mounted switches and circuit breakers with tops at uniform height unless otherwise indicated.

C. Temporary Lifting Provisions: Remove temporary lifting of eyes, channels, and brackets and temporary blocking of moving parts from enclosures and components.

D. Install fuses in fusible devices.

E. Comply with NFPA 70 and NECA 1.

3.4 IDENTIFICATION

A. Comply with requirements in Section 260553 "Identification for Electrical Systems."

1. Identify field-installed conductors, interconnecting wiring, and components; provide warning signs.
2. Label each enclosure with engraved metal or laminated-plastic nameplate.

3.5 FIELD QUALITY CONTROL

A. Testing Agency: Engage a qualified testing agency to perform tests and inspections.

B. Perform tests and inspections.

C. Tests and Inspections for Switches:

1. Visual and Mechanical Inspection:

a. Inspect physical and mechanical condition.
b. Inspect anchorage, alignment, grounding, and clearances.
c. Verify that the unit is clean.
d. Verify blade alignment, blade penetration, travel stops, and mechanical operation.
e. Verify that fuse sizes and types match the Specifications and Drawings.
f. Verify that each fuse has adequate mechanical support and contact integrity.
g. Inspect bolted electrical connections for high resistance using one of the two following methods:

1) Use a low-resistance ohmmeter.

a) Compare bolted connection resistance values to values of similar connections. Investigate values that deviate from those of similar bolted connections by more than 50 percent of the lowest value.

2) Verify tightness of accessible bolted electrical connections by calibrated torque-wrench method in accordance with manufacturer's published data or NETA ATS Table 100.12.

a) Bolt-torque levels shall be in accordance with manufacturer's published data. In the absence of manufacturer's published data, use NETA ATS Table 100.12.

h. Verify that operation and sequencing of interlocking systems is as described in the Specifications and shown on the Drawings.
i. Verify correct phase barrier installation.
j. Verify lubrication of moving current-carrying parts and moving and sliding surfaces.

2. Electrical Tests:

a. Perform resistance measurements through bolted connections with a low-resistance ohmmeter. Compare bolted connection resistance values to values of similar connections. Investigate values that deviate from adjacent poles or similar switches by more than 50 percent of the lowest value.
b. Measure contact resistance across each switchblade fuseholder. Drop values shall not exceed the high level of the manufacturer's published data. If manufacturer's published data are not available, investigate values that deviate from adjacent poles or similar switches by more than 50 percent of the lowest value.
c. Perform insulation-resistance tests for one minute on each pole, phase-to-phase and phase-to-ground with switch closed, and across each open pole. Apply voltage in accordance with manufacturer's published data. In the absence of manufacturer's published data, use Table 100.1 from the NETA ATS. Investigate values of insulation resistance less than those published in Table 100.1 or as recommended in manufacturer's published data.
d. Measure fuse resistance. Investigate fuse-resistance values that deviate from each other by more than 15 percent.
e. Perform ground fault test according to NETA ATS 7.14 "Ground Fault Protection Systems, Low-Voltage."

D. Tests and Inspections for Molded Case Circuit Breakers:

1. Visual and Mechanical Inspection:

   a. Verify that equipment nameplate data are as described in the Specifications and shown on the Drawings.
   b. Inspect physical and mechanical condition.
   c. Inspect anchorage, alignment, grounding, and clearances.
   d. Verify that the unit is clean.
   e. Operate the circuit breaker to ensure smooth operation.
   f. Inspect bolted electrical connections for high resistance using one of the two following methods:

      1) Use a low-resistance ohmmeter.

         a) Compare bolted connection resistance values to values of similar connections. Investigate values that deviate from those of similar bolted connections by more than 50 percent of the lowest value.

      2) Verify tightness of accessible bolted electrical connections by calibrated torque-wrench method in accordance with manufacturer's published data or NETA ATS Table 100.12.

         a) Bolt-torque levels shall be in accordance with manufacturer's published data. In the absence of manufacturer's published data, use NETA ATS Table 100.12.

   g. Inspect operating mechanism, contacts, and chutes in unsealed units.
   h. Perform adjustments for final protective device settings in accordance with the coordination study.

2. Electrical Tests:

   a. Perform resistance measurements through bolted connections with a low-resistance ohmmeter. Compare bolted connection resistance values to values of similar connections. Investigate values that deviate from adjacent poles or similar switches by more than 50 percent of the lowest value.
   b. Perform insulation-resistance tests for one minute on each pole, phase-to-phase and phase-to-ground with circuit breaker closed, and across each open pole. Apply voltage in accordance with manufacturer's published data. In the absence of manufacturer's published data, use Table 100.1 from the NETA ATS. Investigate values of insulation resistance less than those published in Table 100.1 or as recommended in manufacturer's published data.
   c. Perform a contact/pole resistance test. Drop values shall not exceed the high level of the manufacturer's published data. If manufacturer's published data are not available, investigate values that deviate from adjacent poles or similar switches by more than 50 percent of the lowest value.
   d. Perform insulation resistance tests on all control wiring with respect to ground. Applied potential shall be 500-V dc for 300-V rated cable and 1000-V dc for 600-V rated cable. Test duration shall be one minute. For units with solid state components, follow manufacturer's recommendation. Insulation resistance values shall be no less than two megohms.
   e. Determine the following by primary current injection:

      1) Long-time pickup and delay. Pickup values shall be as specified. Trip characteristics shall not exceed manufacturer's published time-current characteristic tolerance band, including adjustment factors.

2) Short-time pickup and delay. Short-time pickup values shall be as specified. Trip characteristics shall not exceed manufacturer's published time-current characteristic tolerance band, including adjustment factors.
3) Ground-fault pickup and time delay. Ground-fault pickup values shall be as specified. Trip characteristics shall not exceed manufacturer's published time-current characteristic tolerance band, including adjustment factors.
4) Instantaneous pickup. Instantaneous pickup values shall be as specified and within manufacturer's published tolerances.

f. Test functionality of the trip unit by means of primary current injection. Pickup values and trip characteristics shall be as specified and within manufacturer's published tolerances.
g. Perform minimum pickup voltage tests on shunt trip and close coils in accordance with manufacturer's published data. Minimum pickup voltage of the shunt trip and close coils shall be as indicated by manufacturer.
h. Verify correct operation of auxiliary features such as trip and pickup indicators; zone interlocking; electrical close and trip operation; trip-free, anti-pump function; and trip unit battery condition. Reset all trip logs and indicators. Investigate units that do not function as designed.
i. Verify operation of charging mechanism. Investigate units that do not function as designed.

3. Correct malfunctioning units on-site, where possible, and retest to demonstrate compliance; otherwise, replace with new units and retest.
4. Perform the following infrared scan tests and inspections and prepare reports:

a. Initial Infrared Scanning: After Substantial Completion, but not more than 60 days after Final Acceptance, perform an infrared scan of each enclosed switch and circuit breaker. Remove front panels so joints and connections are accessible to portable scanner.
b. Follow-up Infrared Scanning: Perform an additional follow-up infrared scan of each enclosed switch and circuit breaker 11 months after date of Substantial Completion.
c. Instruments and Equipment: Use an infrared scanning device designed to measure temperature or to detect significant deviations from normal values. Provide calibration record for device.

5. Test and adjust controls, remote monitoring, and safeties. Replace damaged and malfunctioning controls and equipment.

E. Enclosed switches and circuit breakers will be considered defective if they do not pass tests and inspections.

F. Prepare test and inspection reports.

1. Test procedures used.
2. Include identification of each enclosed switch and circuit breaker tested and describe test results.
3. List deficiencies detected, remedial action taken, and observations after remedial action.

3.6 ADJUSTING

A. Adjust moving parts and operable components to function smoothly and lubricate as recommended by manufacturer.

B. Set field-adjustable circuit-breaker trip ranges.

END OF SECTION 26 28 16

Page Left Intentionally Blank

SECTION 264113 - LIGHTNING PROTECTION FOR STRUCTURES

PART 1 - GENERAL

1.1 SUMMARY

A. Section includes lightning protection system for the following:

1. Ordinary structures.

1.2 ACTION SUBMITTALS

A. Product Data: For each type of product.

B. Shop Drawings:

1. Include layouts of the lightning protection system, with details of the components to be used in the installation.
2. Include raceway locations needed for the installation of conductors.
3. Details of air terminals, ground rods, ground rings, conductor supports, splices, and terminations, including concealment requirements.
4. Include roof attachment details, coordinated with roof installation.
5. Calculations required by NFPA 780 for bonding of metal bodies.

1.3 INFORMATIONAL SUBMITTALS

A. Coordination Drawings: Lightning protection system Shop Drawings, drawn to scale, coordinated with each other, using input from installers of the items involved:

B. Qualification Data: For Installer.

C. Product certificates.

D. Field quality-control reports.

1.4 CLOSEOUT SUBMITTALS

A. Maintenance data.

1. Include the following:

a. Dimensioned site plan showing dimensioned route of the ground loop conductor and the ground rod locations. Comply with requirements of Section 017839 "Project Record Documents."
b. A system testing and inspection record, listing the results of inspections and ground resistance tests, as recommended by NFPA 780, Annex D.

B. Completion Certificate:

1. UL Master Label Certificate.

1.5 QUALITY ASSURANCE

A. Installer Qualifications: LPI Master Installer.

PART 2 - PRODUCTS

2.1 MANUFACTURERS

A. < Automatic Lightning Protection.
B. ERICO International Corporation.
C. Harger Lightning Protection, Inc.
D. Heary Bros. Lightning Protection Co. Inc.
E. Robbins Lightning Inc.
F. Thompson Lightning Protection, Inc.

2.2 PERFORMANCE REQUIREMENTS

A. NFPA Lightning Protection Standard: Comply with NFPA 780 requirements for Class I buildings.

B. UL Lightning Protection Standard: Comply with UL 96A requirements for Class I buildings.

C. Lightning Protection Components, Devices, and Accessories: Listed and labeled by a qualified testing agency as complying with UL 96, and marked for intended location and application.

2.3 MATERIALS

A. Air Terminals:

1. Aluminum unless otherwise indicated.
2. 5/8-inch (16-mm) diameter by 24 inches (610 mm) long.
3. Rounded tip.
4. Threaded base support.

B. Class 1 Main Conductors:

1. Aluminum: 98,600 circular mils in diameter.

C. Secondary Conductors:

1. Aluminum: 41,400 circular mils in diameter.

D. Ground Rods:

1. Material: Copper-clad steel.
2. Diameter: 3/4 inch (19 mm).
3. Rods shall be not less than 240 inches (6096 mm) long.
4. Sectional type, with integral threads.

E. Conductor Splices and Connectors: Compression fittings that are installed with hydraulically operated tools, or exothermic welds, approved for use with the class type.

PART 3 - EXECUTION

3.1 INSTALLATION

A. Install lightning protection components and systems according to UL 96A.

B. Install conductors with direct paths from air terminals to ground connections. Avoid bends less than 90 degrees and 8 inches (203 mm) in radius and narrow loops.

C. Conceal conductors within normal view from exterior locations at grade within 200 feet (60 m) of building. Comply with requirements for concealed systems in NFPA 780.

1. Roof penetrations required for down conductors and connections to structural-steel framework shall be made using listed through-roof fitting and connector assemblies with solid rods and appropriate roof flashings. Use materials approved by the roofing manufacturer for the purpose. Conform to the methods and materials required at roofing penetrations of the lightning protection components to ensure compatibility with the roofing specifications and warranty.
2. Install conduit where necessary to comply with conductor concealment requirements.

3.2 CONNECTIONS

A. Aboveground concealed connections, and connections in earth or concrete, shall be done by exothermic welds or by high-compression fittings listed for the purpose.

B. Aboveground exposed connections shall be done using the following types of connectors, listed and labeled for the purpose: exothermic weld.

C. Bonding Straps and Jumpers: Install in locations accessible for inspection and maintenance, except where routed through short lengths of conduit.

1. Bonding to Structure: Bond straps directly to basic structure, taking care not to penetrate any adjacent parts.
2. Bonding to Equipment Mounted on Vibration Isolation Hangers and Supports: Install bonding so vibration is not transmitted to rigidly mounted equipment.

3.3 CORROSION PROTECTION

A. Do not combine materials that can form an electrolytic couple that will accelerate corrosion in the presence of moisture unless moisture is permanently excluded from junction of such materials.

B. Use conductors with protective coatings where conditions would cause deterioration or corrosion of conductors.

3.4 FIELD QUALITY CONTROL

A. Special Inspections: Engage a qualified special inspector to perform the following special inspections:

1. Perform inspections as required to obtain a UL Master Label for system.

B. Prepare test and inspection reports and certificates.

END OF SECTION 264113

SECTION 264313 - SURGE PROTECTION FOR LOW-VOLTAGE ELECTRICAL POWER CIRCUITS

PART 1 - GENERAL

1.1 SUMMARY

A. Section includes:

1. Type 1 surge protective devices.
2. Type 2 surge protective devices.
3. Enclosures.
4. Conductors and cables.

B. Related Requirements:
1. Section 262416 "Panelboards" for integral SPDs installed by panelboard manufacturer.
2. Section 262726 "Wiring Devices" for integral SPDs installed by receptacle manufacturer.

1.2 DEFINITIONS

A. Inominal: Nominal discharge current.

B. MCOV: Maximum continuous operating voltage.

C. Mode(s), also Modes of Protection: air of electrical connections where the VPR applies.

D. MOV: Metal-oxide varistor; an electronic component with a significant non-ohmic current-voltage characteristic.

E. NRTL: Nationally recognized testing laboratory.

F. OCPD: Overcurrent protective device.

G. SCCR: Short-circuit current rating.

H. SPD: Surge protective device.

I. Type 1 SPDs: Permanently connected SPDs intended for installation between the secondary of the service transformer and the line side of the service disconnect overcurrent device.

J. Type 2 SPDs: Permanently connected SPDs intended for installation on the load side of the service disconnect overcurrent device, including SPDs located at the branch panel.

K. Type 3 SPDs: Point of utilization SPDs.

L. VPR: Voltage protection rating.

1.3 ACTION SUBMITTALS

A. Product Data: For each type of product.

1. Include electrical characteristics, specialties, and accessories for SPDs.
2. NRTL certification of compliance with UL 1449.

    a. Tested values for VPRs.
    b. Inominal ratings.
    c. MCOV, type designations.
    d. OCPD requirements.
    e. Manufacturer's model number.
    f. System voltage.
    g. Modes of protection.

1.4 INFORMATIONAL SUBMITTALS

A. Field quality-control reports.

B. Sample Warranty: For manufacturer's special warranty.

1.5 CLOSEOUT SUBMITTALS

A. Maintenance Data: For SPDs to include in maintenance manuals.

1.6 WARRANTY

A. Manufacturer's Warranty: Manufacturer agrees to repair or replace SPDs that fail in materials or workmanship within five years from date of Substantial Completion.

PART 2 - PRODUCTS

2.1 TYPE 1 SURGE PROTECTIVE DEVICES (SPDs)

A. Manufacturers: Subject to compliance with requirements, provide products by one of the following:

1. APT, a division of Schneider Electric
2. SSI, an ILSCO Company
3. Siemens Energy & Automation, Inc.
4. Eaton Corporation, Cutler-Hammer Products
5. G.E., a division of ABB

B. Source Limitations: Obtain devices from single source from single manufacturer.

C. Standards:

1. Listed and labeled by an NRTL acceptable to authorities having jurisdiction as complying with UL 1449, Type 1.

D. Product Options:

1. Include integral disconnect switch.

2. Include internal thermal protection that disconnects the SPD before damaging internal suppressor components.
3. Include indicator light display for protection status.
4. Include audible alarm.
5. Include NEMA ICS 5, dry Form C contacts rated at 2 A and 24 V ac for remote monitoring of protection status.
6. Include surge counter.

E. Performance Criteria:

1. MCOV: Not less than 125 percent of nominal system voltage for 208Y/120 V and 120/240 V power systems, and not less than 115 percent of nominal system voltage for 480Y/277 V power systems.
2. Peak Surge Current Rating: Minimum single-pulse surge current withstand rating per phase must not be less than 200 kA. Peak surge current rating must be arithmetic sum of the ratings of individual MOVs in a given mode.
3. Protection modes and UL 1449 VPR for grounded wye circuits with 480Y/277 V or 208Y/120 V, three-phase, four-wire circuits must not exceed the following:

    a. Line to Neutral: 1200 V for 480Y/277 V or 700 V for 208Y/120 V.
    b. Line to Line: 2000 V for 480Y/277 V or 1200 V for 208Y/120 V.

4. Protection modes and UL 1449 VPR for 240/120 V, single-phase, three-wire circuits must not exceed the following:

    a. Line to Neutral: 700 V.
    b. Line to Line: 1200 V.

5. SCCR: Not less than 200 kA.
6. Inominal Rating: 20 kA.

2.2 TYPE 2 SURGE PROTECTIVE DEVICES (SPDs)

A. Manufacturers: Subject to compliance with requirements, provide products by one of the following:

1. APT, a division of Schneider Electric
2. SSI, an ILSCO Company
3. Siemens Energy & Automation, Inc.
4. Eaton Corporation, Cutler-Hammer Products
5. G.E., a division of ABB

B. Source Limitations: Obtain devices from single source from single manufacturer.

C. Standards:

1. Listed and labeled by an NRTL acceptable to authorities having jurisdiction as complying with UL 1449, Type 2.
2. Comply with UL 1283.

D. Product Options:

1. Include LED indicator lights for power and protection status.

2. Include internal thermal protection that disconnects the SPD before damaging internal suppressor components.
3. Include NEMA ICS 5, dry Form C contacts rated at 2 A and 24 V ac for remote monitoring of protection status.
4. Include surge counter.

E. Performance Criteria:

1. MCOV: Not less than 125 percent of nominal system voltage for 208Y/120 V and 120/240 V power systems, and not less than 115 percent of nominal system voltage for 480Y/277 V power systems.
2. Peak Surge Current Rating: Minimum single-pulse surge current withstand rating per phase must not be less than 150 kA. Peak surge current rating must be arithmetic sum of the ratings of individual MOVs in a given mode.
3. Protection modes and UL 1449 VPR for grounded wye circuits with 480Y/277 V or 208Y/120 V, three-phase, four-wire circuits must not exceed the following:

    a. Line to Neutral: 1200 V for 480Y/277 V or 700 V for 208Y/120 V.
    b. Line to Ground: 1200 V for 480Y/277 V or 700 V for 208Y/120 V.
    c. Neutral to Ground: 1200 V for 480Y/277 V or 700 V for 208Y/120 V.
    d. Line to Line: 2000 V for 480Y/277 V or 1200 V for 208Y/120 V.

4. Protection modes and UL 1449 VPR for 240/120 V, single-phase, three-wire circuits must not exceed the following:

    a. Line to Neutral: 700 V.
    b. Line to Ground: 700 V.
    c. Neutral to Ground: 700 V.
    d. Line to Line: 1200 V.

5. SCCR: Equal or exceed 200 kA.
6. Inominal Rating: 10 kA.

2.3 ENCLOSURES

A. Indoor Enclosures: NEMA 250, Type 1.

B. Outdoor Enclosures: NEMA 250, Type 3R or Type 4X.

2.4 CONDUCTORS AND CABLES

A. Power Wiring: Same size as SPD leads, complying with Section 260519 "Low-Voltage Electrical Power Conductors and Cables."

PART 3 - EXECUTION

3.1 INSTALLATION

A. Comply with NECA 1.

B. Provide OCPD and disconnect for installation of SPD in accordance with UL 1449 and manufacturer's written instructions.

C. Install leads between disconnects and SPDs short, straight, twisted, and in accordance with manufacturer's written instructions. Comply with wiring methods in Section 260519 "Low-Voltage Electrical Power Conductors and Cables."

1. Do not splice and extend SPD leads unless specifically permitted by manufacturer.
2. Do not exceed manufacturer's recommended lead length.
3. Do not bond neutral and ground.

D. Use crimped connectors and splices only. Wire nuts are unacceptable.

3.2 FIELD QUALITY CONTROL

A. Perform the following tests and inspections with the assistance of a factory-authorized service representative:

1. Compare equipment nameplate data for compliance with Drawings and the Specifications.
2. Inspect anchorage, alignment, grounding, and clearances.
3. Verify that electrical wiring installation complies with manufacturer's written installation requirements.

B. SPDs that do not pass tests and inspections will be considered defective.

C. Prepare test and inspection reports.

3.3 STARTUP SERVICE

A. Complete startup checks in accordance with manufacturer's written instructions.

B. Do not perform insulation-resistance tests of the distribution wiring equipment with SPDs installed. Disconnect SPDs before conducting insulation-resistance tests; reconnect them immediately after the testing is over.

C. Energize SPDs after power system has been energized, stabilized, and tested.

3.4 DEMONSTRATION

A. Train Owner's maintenance personnel to operate and maintain SPDs.

END OF SECTION 264313

THIS PAGE LEFT INTENTIONALLY BLANK

SECTION 265119 - LED INTERIOR LIGHTING

PART 1 - GENERAL

1.1 RELATED DOCUMENTS

A. Drawings and general provisions of the Contract, including General and Supplementary Conditions and Division 01 Specification Sections, apply to this Section.

1.2 SUMMARY

A. Section includes interior only LED luminaires:

B. Related Requirements:

1. Section 260943 "Distributed Intelligence Based Lighting Controls" for automatic control of lighting.
2. Section 260943.23 "Relay Based Lighting Controls" for automatic control of lighting.

1.3 DEFINITIONS

A. CCT: Correlated color temperature.

B. CRI: Color Rendering Index.

C. Fixture: See "Luminaire."

D. IP: International Protection or Ingress Protection Rating.

E. LED: Light-emitting diode.

F. Lumen: Measured output of lamp and luminaire, or both.

G. Luminaire: Complete lighting unit, including lamp, reflector, and housing.

1.4 ACTION SUBMITTALS

A. Product Data: For each type of product.

1. Arrange in order of luminaire designation.
2. Include data on features, accessories, and finishes.
3. Include physical description and dimensions of luminaires.
4. Include emergency lighting units, including batteries and chargers.
5. Include life, output (lumens, CCT, and CRI), and energy-efficiency data.

a. Manufacturer's Certified Data: Photometric data certified by manufacturer's laboratory with a current accreditation under the NVLAP for Energy Efficient Lighting Products.

6. Wiring diagrams for power, control, and signal wiring.
7. Means of attaching luminaires to supports and indication that the attachment is suitable for components involved.

B. Shop Drawings: For nonstandard or custom luminaires.

1. Include plans, elevations, sections, and mounting and attachment details.
2. Include details of luminaire assemblies. Indicate dimensions, weights, loads, required clearances, method of field assembly, components, and location and size of each field connection.
3. Include diagrams for power, signal, and control wiring.

1.5 INFORMATIONAL SUBMITTALS

A. Sample warranty.

1.6 CLOSEOUT SUBMITTALS

A. Operation and Maintenance Data: For luminaires and lighting systems to include in operation and maintenance manuals.

1. Provide a list of all types used on Project; use ANSI and manufacturers' codes.

1.7 MAINTENANCE MATERIAL SUBMITTALS

A. Furnish extra materials that match products installed and that are packaged with protective covering for storage and identified with labels describing contents.

1. Diffusers and Lenses: One for every 100 of each type and rating installed. Furnish at least one of each type.
2. Globes and Guards: One for every 50 of each type and rating installed. Furnish at least one of each type.

1.8 QUALITY ASSURANCE

A. Each luminaire type shall be binned within a three-step MacAdam Ellipse to ensure color consistency among luminaires.

B. Mockups: For interior luminaires in room or module mockups, complete with power and control connections.

1. Obtain Architect's approval of luminaires in mockups before starting installations.
2. Maintain mockups during construction in an undisturbed condition as a standard for judging the completed Work.
3. Approval of mockups does not constitute approval of deviations from the Contract Documents contained in mockups unless Architect specifically approves such deviations in writing.
4. Subject to compliance with requirements, approved mockups may become part of the completed work if undisturbed at time of Substantial Completion.

1.9 DELIVERY, STORAGE, AND HANDLING

A. Protect finishes of exposed surfaces by applying a strippable, temporary protective covering before shipping.

1.10 WARRANTY

A. Warranty: Manufacturer and Installer agree to repair or replace components of luminaires that fail in materials or workmanship within specified warranty period.

B. Warranty Period: Two year(s) from date of Substantial Completion.

PART 2 - PRODUCTS

2.1 PERFORMANCE REQUIREMENTS

A. Ambient Temperature: 41 to 104 deg F (5 to 40 deg C).

B. Altitude: Sea level to 1000 feet (300 m).

2.2 LUMINAIRE REQUIREMENTS

A. Electrical Components, Devices, and Accessories: Listed and labeled as defined in NFPA 70, by a qualified testing agency, and marked for intended location and application.

B. Factory-Applied Labels: Comply with UL 1598. Locate labels where they will be readily visible to service personnel, but not seen from normal viewing angles when lamps are in place.

1. Label shall include the following lamp module characteristics:

a. Manufacturer

b. Model number

c. CCT and CRI.

C. NRTL Compliance: Luminaires for hazardous locations shall be listed and labeled for indicated class and division of hazard by an NRTL.

D. FM Global Compliance: Luminaires for hazardous locations shall be listed and labeled for indicated class and division of hazard by FM Global.

E. Luminaire CRI requirements: Greater than **80 CRI** unless noted otherwise on Drawings.

F. Luminaire CCT requirements: **4000K** unless noted otherwise on Drawings.

G. Luminaire Lumen outputs: As indicated on Drawings or comparable with luminaire model specified on Drawings.

H. Luminaire Rated Lamp Life: As comparable with luminaire model specified on Drawings.

I. Nominal Operating Voltage: 120 V ac through 277 V ac, or as indicated on Drawings.

1. Dimmable from 100 percent to 10 percent of maximum light output.
2. Internal driver.

J. Doors, Frames, and Other Internal Access: Smooth operating, free of light leakage under operating conditions, and designed to permit relamping without use of tools. Components are designed to prevent doors, frames, lenses, diffusers, and other components from falling accidentally during relamping and when secured in operating position.

K. Lens Thickness (if applicable): At least 0.125-inch (3.175-mm) minimum unless otherwise indicated.

L. Standards:

1. ENERGY STAR certified.
2. RoHS compliant.
3. Recessed luminaires shall comply with NEMA LE 4.
4. UL Listing: Listed for damp or wet location as indicated on drawings and in part numbers specified on the drawings.
5. Industrial luminaires Class 1, Division 2 Group.
6. Ratings below as indicated on drawings and in part numbers specified on the drawings:
   a. NEMA 4X
   b. IP 54
   c. IP 66
   d. IP 67

2.3 MATERIALS

A. Metal Parts:

1. Free of burrs and sharp corners and edges.
2. Sheet metal components shall be steel unless otherwise indicated.
3. Form and support to prevent warping and sagging.

B. Steel:

1. ASTM A36/A36M for carbon structural steel.
2. ASTM A568/A568M for sheet steel.

C. Stainless Steel:

1. 1. Manufacturer's standard grade.
2. 2. Manufacturer's standard type, ASTM A240/240M.

D. Galvanized Steel: ASTM A653/A653M.

E. Aluminum: ASTM B209.

2.4 METAL FINISHES

A. Variations in finishes are unacceptable in the same piece. Variations in finishes of adjoining components are acceptable if they are within the range of approved Samples and if they can be and are assembled or installed to minimize contrast.

2.5 LUMINAIRE SUPPORT

A. Comply with requirements in Section 260529 "Hangers and Supports for Electrical Systems" for channel and angle iron supports and nonmetallic channel and angle supports.

B. Single-Stem Hangers: Minimum 1/2-inch (13-mm) steel tubing with swivel ball fittings and ceiling canopy. Finish same as luminaire.

C. Wires: ASTM A641/A641M, Class 3, soft temper, zinc-coated steel, 12 gage (2.68 mm).

D. Rod Hangers: 3/16-inch (5-mm) minimum diameter, cadmium-plated, threaded steel rod.

E. Hook Hangers: Integrated assembly matched to luminaire, line voltage, and equipment with threaded attachment, cord, and locking-type plug.

PART 3 - EXECUTION

3.1 EXAMINATION

A. Examine substrates, areas, and conditions, with Installer present, for compliance with requirements for installation tolerances and other conditions affecting performance of the Work.

B. Examine roughing-in for luminaire to verify actual locations of luminaire and electrical connections before luminaire installation.

C. Proceed with installation only after unsatisfactory conditions have been corrected.

3.2 INSTALLATION

A. Comply with NECA 1.

B. Install luminaires level, plumb, and square with ceilings and walls unless otherwise indicated.

C. Supports:

1. Sized and rated for luminaire weight.
2. Able to maintain luminaire position after cleaning and relamping.
3. Provide support for luminaire without causing deflection of ceiling or wall.
4. Luminaire-mounting devices shall be capable of supporting a horizontal force of 100 percent of luminaire weight and a vertical force of 400 percent of luminaire weight.

D. Flush-Mounted Luminaires:

1. Secured to outlet box.

2. Attached to ceiling structural members at two points equally spaced around circumference of luminaire.
3. Trim ring flush with finished surface.

E. Wall-Mounted Luminaires:

1. Attached to structural members in walls.
2. Do not attach luminaires directly to gypsum board.

F. Suspended Luminaires:

1. Pendants, Aircraft Cable and Rods: Where longer than 48 inches (1200 mm), brace to limit swinging.
2. Stem-Mounted, Single-Unit Luminaires: Suspend with twin-stem hangers. Support with approved outlet box and accessories that hold stem and provide damping of luminaire oscillations. Support outlet box vertically to building structure using approved devices.
3. Do not use ceiling grid as support for pendant luminaires. Connect support wires or rods to building structure.

G. Ceiling-Grid-Mounted Luminaires:

1. Secure to any required outlet box.
2. Use approved devices and support components to connect luminaire to ceiling grid and building structure in a minimum of two (four) locations, spaced near corners of luminaire and connected directly to structure.

H. Comply with requirements in Section 260519 "Low-Voltage Electrical Power Conductors and Cables" for wiring connections.

3.3 IDENTIFICATION

A. Identify system components, wiring, cabling, and terminals. Comply with requirements for identification specified in Section 260553 "Identification for Electrical Systems."

3.4 FIELD QUALITY CONTROL

A. Perform the following tests and inspections:

1. Operational Test: After installing luminaires, switches, and accessories, and after electrical circuitry has been energized, test units to confirm proper operation.
2. Test for Emergency Lighting: Interrupt power supply to demonstrate proper operation. Verify transfer from normal power to battery power and retransfer to normal.

B. Luminaire will be considered defective if it does not pass operation tests and inspections.

3.5 ADJUSTING

A. Occupancy Adjustments: When requested within 12 months of date of Substantial Completion, provide on-site assistance in adjusting the direction of aim of luminaires to suit occupied conditions. Make up to two visits to Project during other-than-normal hours for this purpose. Some of this work may be required during hours of darkness.

1. During adjustment visits, inspect all luminaires. Replace lamps or luminaires that are defective.
2. Parts and supplies shall be manufacturer's authorized replacement parts and supplies.

END OF SECTION 265119

THIS PAGE LEFT INTENTIONALLY BLANK

SECTION 265213 - EMERGENCY AND EXIT LIGHTING

PART 1 - GENERAL

1.1 RELATED DOCUMENTS

A. Drawings and general provisions of the Contract, including General and Supplementary Conditions and Division 01 Specification Sections, apply to this Section.

1.2 SUMMARY

A. Section Includes:

1. Emergency lighting units.
2. Exit signs.
3. Luminaire supports.

1.3 DEFINITIONS

A. CCT: Correlated color temperature.

B. CRI: Color Rendering Index.

C. Emergency Lighting Unit: A lighting unit with internal or external emergency battery powered supply and the means for controlling and charging the battery and unit operation.

D. Fixture: See "Luminaire" Paragraph.

E. Lumen: Measured output of lamp and luminaire, or both.

F. Luminaire: Complete lighting unit, including lamp, reflector, and housing.

1.4 ACTION SUBMITTALS

A. Product Data: For each type of emergency lighting unit, exit sign, and emergency lighting support.

1. Include data on features, accessories, and finishes.
2. Include physical description of the unit and dimensions.
3. Battery and charger for light units.

B. Shop Drawings: For nonstandard or custom luminaires.

1. Include plans, elevations, sections, and mounting and attachment details.
2. Include details of equipment assemblies. Indicate dimensions, weights, loads, required clearances, method of field assembly, components, and location and size of each field connection.
3. Include diagrams for power, signal, and control wiring.

C. Product Schedule:

1. For emergency lighting units.
2. For exit signs.

1.5 CLOSEOUT SUBMITTALS

A. Operation and Maintenance Data: For luminaires and lighting systems to include in emergency, operation, and maintenance manuals.

1.6 MAINTENANCE MATERIAL SUBMITTALS

A. Furnish extra materials that match products installed and that are packaged with protective covering for storage and identified with labels describing contents.

1. Luminaire-mounted, emergency battery pack: One for every 50 emergency lighting units. Furnish at least one of each type.

1.7 DELIVERY, STORAGE, AND HANDLING

A. Protect finishes of exposed surfaces by applying a strippable, temporary protective covering before shipping.

1.8 WARRANTY

A. Warranty: Manufacturer and Installer agree to repair or replace components of luminaires that fail in materials or workmanship within specified warranty period.

1. Warranty Period: Five year(s) from date of Substantial Completion.

B. Special Warranty for Emergency Lighting Batteries: Manufacturer's standard form in which manufacturer of battery-powered emergency lighting unit agrees to repair or replace components of rechargeable batteries that fail in materials or workmanship within specified warranty period.

1. Warranty Period for Emergency Power Unit Batteries: Five years from date of Substantial Completion. Full warranty shall apply for the entire warranty period.
2. Warranty Period for Self-Powered Exit Sign Batteries: Five years from date of Substantial Completion. Full warranty shall apply for the entire warranty period.

PART 2 - PRODUCTS

2.1 GENERAL REQUIREMENTS FOR EMERGENCY LIGHTING

A. Electrical Components, Devices, and Accessories: Listed and labeled as defined in NFPA 70, by a qualified testing agency, and marked for intended location and application.

B. NRTL Compliance: Fabricate and label emergency lighting units, exit signs, and batteries to comply with UL 924.

C. Comply with NFPA 70 and NFPA 101.

D. Comply with NEMA LE 4 for recessed luminaires.

E. Internal Type Emergency Power Unit: Self-contained, modular, battery-inverter unit, factory mounted within luminaire body.

1. Operation: Relay automatically turns lamp on when power-supply circuit voltage drops to 80 percent of nominal voltage or below. Lamp automatically disconnects from battery when voltage approaches deep-discharge level. When normal voltage is restored, relay disconnects lamps from battery, and battery is automatically recharged and floated on charger.
2. Battery: Sealed, maintenance-free, nickel-cadmium type.
3. Charger: Fully automatic, solid-state, constant-current type with sealed power transfer relay.
4. Integral Self-Test: Factory-installed electronic device automatically initiates code-required test of unit emergency operation at required intervals. Test failure is annunciated by an integral audible alarm and a flashing red LED.

F. External Type: Self-contained, modular, battery-inverter unit, suitable for powering one or more lamps, remote mounted from luminaire.

1. Operation: Relay automatically turns lamp on when power-supply circuit voltage drops to 80 percent of nominal voltage or below. Lamp automatically disconnects from battery when voltage approaches deep-discharge level. When normal voltage is restored, relay disconnects lamps from battery, and battery is automatically recharged and floated on charger.
2. Battery: Sealed, maintenance-free, nickel-cadmium type.
3. Charger: Fully automatic, solid-state, constant-current type.
4. Housing: NEMA 250, Type 1 enclosure listed for installation inside, on top of, or remote from luminaire. Remote assembly shall be located no less than half the distance recommended by the driver or emergency power unit manufacturer, whichever is less.
5. LED Indicator Light: Indicates normal power on. Normal glow indicates trickle charge; bright glow indicates charging at end of discharge cycle.
6. Integral Self-Test: Factory-installed electronic device automatically initiates code-required test of unit emergency operation at required intervals. Test failure is annunciated by an integral audible alarm and a flashing red LED.

2.2 EMERGENCY LIGHTING

A. Emergency Luminaires:

1. Emergency Luminaires: Interior Luminaire Schedule and Drawings.

a. Operating at nominal voltage of 120 V ac or 277 V ac
b. Internal or External emergency power unit.
c. Rated for installation in damp locations, and for sealed and gasketed luminaires in wet locations.
d. UL 94 flame rating.

B. Emergency Lighting Unit:

1. Emergency Lighting Unit: Interior Luminaire Schedule and Drawings.
2. Operating at nominal voltage of 120 V ac or 277 V ac
3. Wall or Ceiling mount as indicated on drawings, with universal junction box adaptor.
4. UV stable thermoplastic housing.
5. Two lamp heads.
6. Internal emergency power unit.

C. Remote Emergency Lighting Units:

1. Emergency Lighting Unit: As indicated on Interior Luminaire Schedule and Drawings.
2. Operating at nominal voltage of 120 V ac or 277 V ac
3. Wall or Ceiling mount as indicated on drawings, with universal junction box adaptor.
4. UV stable thermoplastic housing.
5. LED lamp heads.
6. External emergency power unit.

2.3 EXIT SIGNS

A. General Requirements for Exit Signs: Comply with UL 924; for sign colors, visibility, luminance, and lettering size, comply with authorities having jurisdiction.

B. Internally Lighted Signs:

1. Operating at nominal voltage of 120 V ac or 277 V ac
2. Lamps for AC Operation: LEDs; 50,000 hours minimum rated lamp life.
3. Self-Powered Exit Signs (Battery Type): Internal emergency power unit.

2.4 MATERIALS

A. Metal Parts:

1. Free of burrs and sharp corners and edges.
2. Sheet metal components shall be steel unless otherwise indicated.
3. Form and support to prevent warping and sagging.

B. Doors, Frames, and Other Internal Access:

1. Smooth operating, free of light leakage under operating conditions.
2. Designed to permit relamping without use of tools.
3. Designed to prevent doors, frames, lenses, diffusers, and other components from falling accidentally during relamping and when secured in operating position.

C. Housings:

1. Extruded aluminum or Thermoplastic housing, as indicated on drawings.
2. Clear finish.

D. Conduit: Electrical metallic tubing, minimum 3/4 inch (21 mm) in diameter.

2.5 METAL FINISHES

A. Appearance of Finished Work: Noticeable variations in same piece are not acceptable. Variations in appearance of adjoining components are acceptable if they are within the range of approved Samples and are assembled or installed to minimize contrast.

2.6 LUMINAIRE SUPPORT COMPONENTS

A. Comply with requirements in Section 260529 "Hangers and Supports for Electrical Systems" for channel and angle iron supports and nonmetallic channel and angle supports.

B. Support Wires: ASTM A641/A641M, Class 3, soft temper, zinc-coated steel, 12 gage (2.68 mm).

PART 3 - EXECUTION

3.1 EXAMINATION

A. Examine substrates, areas, and conditions, with Installer present, for compliance with requirements for conditions affecting performance of luminaires.

B. Examine roughing-in for luminaire to verify actual locations of luminaire and electrical connections before luminaire installation.

C. Examine walls, floors, roofs, and ceilings for suitable conditions where emergency lighting luminaires will be installed.

D. Proceed with installation only after unsatisfactory conditions have been corrected.

3.2 INSTALLATION

A. Comply with NECA 1.

B. Install luminaires level, plumb, and square with ceilings and walls unless otherwise indicated.

3.3 IDENTIFICATION

A. Identify system components, wiring, cabling, and terminals. Comply with requirements for identification specified in Section 260553 "Identification for Electrical Systems."

3.4 FIELD QUALITY CONTROL

A. Perform the following tests and inspections:

1. Test for Emergency Lighting: Interrupt power supply to demonstrate proper operation. Verify transfer from normal power to battery power and retransfer to normal.

B. Luminaire will be considered defective if it does not pass operation tests and inspections.

3.5 STARTUP SERVICE

A. Perform startup service:

1. Charge emergency power units and batteries minimum of one hour and depress switch to conduct short-duration test.

3.6 ADJUSTING

A. Adjustments: Within 12 months of date of Substantial Completion, provide on-site visit to do the following:

1. Inspect all luminaires. Replace lamps, emergency power units, batteries, signs, or luminaires that are defective.

    a. Parts and supplies shall be manufacturer's authorized replacement parts and supplies.

2. Conduct short-duration tests on all emergency lighting.

END OF SECTION 265213

SECTION 265613 - LIGHTING POLES AND STANDARDS

PART 1 - GENERAL

1.1 RELATED DOCUMENTS

A. Drawings and general provisions of the Contract, including General and Supplementary Conditions and Division 01 Specification Sections, apply to this Section.

1.2 SUMMARY

A. Section Includes:

1. Poles and accessories for support of luminaires.

1.3 DEFINITIONS

A. EPA: Equivalent projected area.

B. Luminaire: Complete luminaire.

C. Pole: Luminaire-supporting structure, including tower used for large-area illumination.

D. Standard: See "Pole."

1.4 ACTION SUBMITTALS

A. Product Data: For each pole, accessory, and luminaire-supporting device, arranged as indicated.

1. Include data on construction details, profiles, EPA, cable entrances, materials, dimensions, weight, rated design load, and ultimate strength of individual components.
2. Include finishes for lighting poles and luminaire-supporting devices.
3. Anchor bolts.
4. Manufactured pole foundations.

B. Shop Drawings:

1. Include plans, elevations, sections, and mounting and attachment details.
2. Include details of equipment assemblies. Indicate dimensions, weights, loads, required clearances, method of field assembly, components, and location and size of each field connection.
3. Detail fabrication and assembly of poles and pole accessories.
4. Foundation construction details, including material descriptions, dimensions, anchor bolts, support devices, and calculations, signed and sealed by a professional engineer licensed in the state of installation.
5. Anchor bolt templates keyed to specific poles and certified by manufacturer.
6. Method and procedure of pole installation. Include manufacturer's written installations.

1.5 INFORMATIONAL SUBMITTALS

A. Pole and Support Component Certificates: Signed by manufacturers of poles, certifying that products are designed for indicated load requirements according to AASHTO LTS-6-M and that load imposed by luminaire and attachments has been included in design. The certification shall be based on design calculations signed and sealed by a professional engineer.

B. Material Test Reports:

1. For each foundation component, by a qualified testing agency.
2. For each pole, by a qualified testing agency.

C. Field quality-control reports.

D. Sample Warranty: Manufacturer's standard warranty.

E. Soil test reports

1.6 CLOSEOUT SUBMITTALS

A. Operation and Maintenance Data: For poles to include in emergency, operation, and maintenance manuals.

1. In addition to items specified in Section 017823 "Operation and Maintenance Data," include pole inspection and repair procedures.

1.7 MAINTENANCE MATERIAL SUBMITTALS

A. Pole repair materials.

1.8 DELIVERY, STORAGE, AND HANDLING

A. Package aluminum poles for shipping according to ASTM B660.

B. Store poles on decay-resistant skids at least 12 inches (300 mm) above grade and vegetation. Support poles to prevent distortion and arrange to provide free air circulation.

C. Retain factory-applied pole wrappings on poles until right before pole installation. Handle poles with web fabric straps.

1.9 WARRANTY

A. Special Warranty: Manufacturer agrees to repair or replace components of poles that fail in materials or workmanship; that corrode; or that fade, stain, perforate, erode, or chalk due to effects of weather or solar radiation within a specified warranty period. Manufacturer may exclude lightning damage, hail damage, vandalism, abuse, or unauthorized repairs from special warranty period.

1. Warranty Period: Five years from date of Substantial Completion.
2. Warranty Period for Corrosion Resistance: Five years from date of Substantial Completion.

3. Warranty Period for Color Retention: Five years from date of Substantial Completion.

PART 2 - PRODUCTS

2.1 PERFORMANCE REQUIREMENTS

A. Delegated Design: Engage a qualified professional engineer, as defined in Section 014000 "Quality Requirements," to design pole foundation and pole power system.

B. Structural Characteristics: Comply with AASHTO LTS-6-M.

C. Dead Load: Weight of luminaire and its horizontal and vertical supports, and supporting structure, applied according to AASHTO LTS-6-M.

D. Wind Load: Pressure of wind on pole and luminaire, calculated and applied according to AASHTO LTS-6-M.

1. Basic wind speed for calculating wind load for poles 50 feet (15 m) high or less is 150 mph (68 m/s).

a. Wind Importance Factor: 1.0
b. Minimum Design Life:25 years
c. Velocity Conversion Factor: 1.0

E. Wind Load: Pressure of wind on pole and luminaire, calculated and applied according to AASHTO LTS-6-M.

1. Basic wind speed for calculating wind load for poles 50 feet (15 m) high or less is 150 mph (68 m/s).

a. Risk Category: As determined by FBC Table 1604.5
b. Minimum Design Life:25 years
c. Wind Load: Ultimate Design Wind Speed as calculated using FBC Section 1609.

F. Strength Analysis: For each pole, multiply the actual EPA of luminaires and brackets by a factor of 1.3 to obtain the EPA to be used in pole selection strength analysis.

G. Luminaire Attachment Provisions: Comply with luminaire manufacturers' mounting requirements. Use stainless-steel fasteners and mounting bolts unless otherwise indicated.

2.2 ALUMINUM POLES

A. Poles: extruded structural tube complying with ASTM B221, with access handhole in pole wall.

1. Shape: Round, tapered.
2. Mounting Provisions: Butt flange for bolted mounting on foundation.

B. Pole-Top Tenons: Fabricated to support luminaire or luminaires and brackets indicated, and securely fastened to pole top.

C. Grounding and Bonding Lugs: Bolted 1/2-inch (13-mm) threaded lug, complying with requirements in Section 260526 "Grounding and Bonding for Electrical Systems," listed for

attaching grounding and bonding conductors of type and size listed in that Section, and accessible through handhole.

D. Fasteners: Stainless steel size and type as determined by manufacturer. Corrosion-resistant items compatible with support components.

1. Materials: Compatible with poles and standards as well as to substrates to which poles and standards are fastened and shall not cause galvanic action at contact points.
2. Anchor Bolts, Leveling Nuts, Bolt Caps, and Washers: Hot-dip galvanized after fabrication unless otherwise indicated.

E. Handhole: Oval shaped, with minimum clear opening of 2-1/2 by 5 inches (65 by 130 mm), with cover secured by stainless-steel captive screws.

F. Aluminum Finish: Comply with NAAMM's "Metal Finishes Manual for Architectural and Metal Products" recommendations for applying and designating finishes.

1. Finish designations prefixed by AA comply with the system established by the Aluminum Association for designating aluminum finishes.
2. Natural Satin Finish: Provide fine, directional, medium satin polish (AA-M32); buff complying with AA-M20 requirements; and seal aluminum surfaces with clear, hard-coat wax.
3. Class I, Clear-Anodic Finish: AA-M32C22A41 (Mechanical Finish: Medium satin; Chemical Finish: Etched, medium matte; Anodic Coating: Architectural Class I clear coating of 0.018 mm or thicker), complying with AAMA 611.
4. Class I, Color-Anodic Finish: AA-M32C22A42/A44 (Mechanical Finish: Medium; Chemical Finish: Etched, medium matte; Anodic Coating: Architectural Class I integrally colored or electrolytically deposited color coating 0.018 mm or thicker), complying with AAMA 611.

G. Factory-Painted Finish: Comply with NAAMM's "Metal Finishes Manual for Architectural and Metal Products" recommendations for applying and designating finishes.

1. Surface Preparation: Clean surfaces to comply with SSPC-SP 1 to remove dirt, oil, grease, and other contaminants that could impair paint bond. Grind welds and polish surfaces to a smooth, even finish. Remove mill scale and rust, if present, from uncoated steel, according to SSPC-SP 5/NACE No. 1 or SSPC-SP 8.
2. Interior Surfaces of Pole: One coat of bituminous paint, or otherwise treat for equal corrosion protection.
3. Exterior Surfaces: Manufacturer's standard finish consisting of one or more coats of primer and two finish coats of high-gloss, high-build polyurethane enamel.

    a. Color: As selected by Architect from manufacturer's full range.

H. Powder-Coat Finish: Comply with NAAMM's "Metal Finishes Manual for Architectural and Metal Products" recommendations for applying and designating finishes.

1. Surface Preparation: Clean surfaces to comply with SSPC-SP 1 to remove dirt, oil, grease, and other contaminants that could impair powder coat bond. Grind welds and polish surfaces to a smooth, even finish. Remove mill scale and rust, if present, from uncoated steel, according to SSPC-SP 5/NACE No. 1 or SSPC-SP 8.
2. Powder coat shall comply with AAMA 2604.

a. Electrostatic applied powder coating; single application with a minimum 2.5- to 3.5-mils (64- to 89-um) dry film thickness; cured according to manufacturer's instructions. Coat interior and exterior of pole for equal corrosion protection.
b. Color: Black, or as selected by Architect from manufacturer's full range.

2.3 POLE ACCESSORIES

A. Base Covers: Manufacturers' standard metal units, finished same as pole, and arranged to cover pole's mounting bolts and nuts.

2.4 MOUNTING HARDWARE

A. Anchor Bolts: Manufactured to ASTM F1554, Grade 55, with a minimum yield strength of 55,000 psi (380 000 kPa).

1. Galvanizing: Hot dip galvanized according to ASTM A153, Class C.
2. Headed rods 7/8”inches (22mm) in diameter by 18 inches (457mm) in length.
3. Threading: Uniform National Coarse Class 2A.

B. Nuts: ASTM A563, Grade A, Heavy-Hex.

1. Galvanizing: Hot dip galvanized according to ASTM A153, Class C.
2. Two nuts provided per anchor bolt.

C. Washers: ASTM F436, Type 1.

1. Galvanizing: Hot dip galvanized according to ASTM A153, Class C.
2. Two washer(s) provided per anchor bolt.

2.5 GENERAL FINISH REQUIREMENTS

A. Protect mechanical finishes on exposed surfaces from damage by applying a strippable, temporary protective covering before shipping.

B. Appearance of Finished Work: Noticeable variations in same piece are unacceptable. Variations in appearance of adjoining components are acceptable if they are within the range of approved Samples and are assembled or installed to minimize contrast.

PART 3 - EXECUTION

3.1 EXAMINATION

A. Examine areas and conditions, with Installer present, for compliance with requirements for installation tolerances and other conditions affecting performance of the Work.

B. Examine poles, luminaire-mounting devices, and pole accessories before installation. Components that are scratched, dented, marred, wet, moisture damaged, or visibly damaged are considered defective.

C. Examine roughing-in for foundation and conduit to verify actual locations of installation.

D. Proceed with installation only after unsatisfactory conditions have been corrected.

3.2 POLE FOUNDATION

Cast Concrete Pole foundations may utilize any of the two options below.

A. Concrete Pole Foundations: Cast in place, with anchor bolts to match pole-base flange. Structural steel complying with ASTM A36/A36M and hot-dip galvanized according to ASTM A123/A123M; and with top-plate and mounting bolts to match pole-base flange and strength required to support pole, luminaire, and accessories. Concrete, reinforcement, and formwork are specified in Section 033000 "Cast-in-Place Concrete."

B. Pre-Cast Foundations: Factory fabricated, with structural steel complying with ASTM A36/A36M and hot-dip galvanized according to ASTM A123/A123M; and with top-plate and mounting bolts to match pole-base flange and strength required to support pole, luminaire, and accessories. Concrete, reinforcement, and formwork are specified in Section 033000 "Cast-in-Place Concrete."

C. Direct-Buried Foundations: Install to depth indicated on Drawings, but not less than one-sixth of pole height. Add backfill as shown on Drawings. To ensure a plumb installation, continuously check pole orientation with plumb bob while tamping.

D. Direct-Buried Poles with Concrete Backfill: Set poles in augered holes to depth as indicated on Drawings, but not less than one-sixth of pole height. To ensure a plumb installation, continuously check pole orientation with plumb bob while tamping.

1. Make holes 6 inches (150 mm) in diameter larger than pole diameter.
2. Fill augered hole around pole with air-entrained concrete having a minimum compressive strength of 3000 psi (20 MPa) at 28 days and finish in a dome above finished grade.
3. Use a short piece of 1/2-inch (13-mm) diameter pipe to make a drain hole through grout. Arrange to drain condensation from interior of pole.
4. Cure concrete a minimum of 72 hours before performing work on pole.

E. Anchor Bolts: Install plumb using manufacturer-supplied template, uniformly spaced.

3.3 POLE INSTALLATION

A. Alignment: Align pole foundations and poles for optimum directional alignment of luminaires and their mounting provisions on pole.

B. Clearances: Maintain the following minimum horizontal distances of poles from surface and underground features unless otherwise indicated on drawing.

1. Fire Hydrants and Water Piping: 60 inches (1520 mm).
2. Water, Gas, Electric, Communications, and Sewer Lines: 10 feet (3 m).
3. Trees: 15 feet (5 m) from tree trunk.

C. Concrete Pole Foundations: Set anchor bolts according to anchor-bolt templates furnished by pole manufacturer. Concrete materials, installation, and finishing requirements are specified in Section 033000 "Cast-in-Place Concrete."

D. Foundation-Mounted Poles: Mount pole with leveling nuts and tighten top nuts to torque level according to pole manufacturer's written instructions.

1. Grout void between pole base and foundation. Use nonshrink or expanding concrete grout firmly packed to fill space.
2. Install base covers unless otherwise indicated.
3. Use a short piece of 1/2 -inch (13-mm) diameter pipe to make a drain hole through grout. Arrange to drain condensation from interior of pole.

E. Raise and set pole using web fabric slings (not chain or cable) at locations indicated by manufacturer.

3.4 CORROSION PREVENTION

A. Aluminum: Do not use in contact with earth or concrete. When in direct contact with a dissimilar metal, protect aluminum using insulating fittings or treatment.

B. Steel Conduits: Comply with requirements in Section 260533 "Raceways and Boxes for Electrical Systems." In concrete foundations, wrap conduit with 0.010-inch- (0.254-mm-) thick, pipe-wrapping plastic tape applied with a 50-percent overlap.

3.5 GROUNDING

A. Ground Metal Poles and Support Structures: Comply with requirements in Section 260526 "Grounding and Bonding for Electrical Systems."

1. Install grounding electrode for each pole unless otherwise indicated.
2. Install grounding conductor pigtail in the base for connecting luminaire to grounding system.

B. Ground Nonmetallic Poles and Support Structures: Comply with requirements in Section 260526 "Grounding and Bonding for Electrical Systems."

1. Install grounding electrode for each pole.
2. Install grounding conductor and conductor protector.
3. Ground metallic components of pole accessories and foundation.

3.6 IDENTIFICATION

A. Identify system components, wiring, cabling, and terminals. Comply with requirements for identification specified in Section 260553 "Identification for Electrical Systems."

END OF SECTION 265613

THIS PAGE LEFT INTENTIONALLY BLANK

SECTION 265619 – LED EXTERIOR LIGHTING

PART 1 - GENERAL

1.1 RELATED DOCUMENTS

A. Drawings and general provisions of the Contract, including General and Supplementary Conditions and Division 01 Specification Sections, apply to this Section.

1.2 SUMMARY

A. Section Includes:

1. Exterior solid-state luminaires that are designed for and exclusively use LED lamp technology.
2. Luminaire supports.
3. Luminaire-mounted photoelectric relays.

B. Related Requirements:

1. Section 260943 "Distributed Intelligence Based Lighting Controls" for automatic control of lighting.
2. Section 265613 "Lighting Poles and Standards" for poles and standards used to support exterior lighting equipment.

1.3 DEFINITIONS

A. CCT: Correlated color temperature.

B. CRI: Color rendering index.

C. Fixture: See "Luminaire."

D. LED: Light-emitting diode.

E. IP: International Protection or Ingress Protection Rating.

F. Lumen: Measured output of lamp and luminaire, or both.

G. Luminaire: Complete lighting unit, including lamp, reflector, and housing.

1.4 ACTION SUBMITTALS

A. Product Data: For each type of luminaire.

1. Arrange in order of luminaire designation.
2. Include data on features, accessories, and finishes.
3. Include physical description and dimensions of luminaire.

4. Include life, output (lumens, CCT, and CRI), and energy-efficiency data.

    a. Manufacturer's Certified Data: Photometric data certified by manufacturer's laboratory with a current accreditation under the NVLAP for Energy Efficient Lighting Products.

5. Wiring diagrams for power, control, and signal wiring.
6. Photoelectric relays.
7. Means of attaching luminaires to supports and indication that the attachment is suitable for components involved.

B. Shop Drawings: For nonstandard or custom luminaires.

1. Include plans, elevations, sections, and mounting and attachment details.
2. Include details of luminaire assemblies. Indicate dimensions, weights, loads, required clearances, method of field assembly, components, and location and size of each field connection.
3. Include diagrams for power, signal, and control wiring.

1.5 INFORMATIONAL SUBMITTALS

A. Sample warranty.

1.6 CLOSEOUT SUBMITTALS

A. Operation and Maintenance Data: For luminaires and photoelectric relays to include operation and maintenance manuals.

1.7 MAINTENANCE MATERIAL SUBMITTALS

A. Furnish extra materials that match products installed and that are packaged with protective covering for storage and identified with labels describing contents.

1. Diffusers and Lenses: One for every 50 of each type and rating installed.
2. Globes and Guards: One for every 50 of each type and rating installed.

1.8 QUALITY ASSURANCE

A. Provide luminaires from a single manufacturer for each luminaire type.

B. Each luminaire type shall be binned within a three-step MacAdam Ellipse to ensure color consistency among luminaires.

1.9 DELIVERY, STORAGE, AND HANDLING

A. Protect finishes of exposed surfaces by applying a strippable, temporary protective covering prior to shipping.

1.10 FIELD CONDITIONS

A. Verify existing and proposed utility structures prior to the start of work associated with luminaire installation.

B. Mark locations of exterior luminaires for approval by Architect prior to the start of luminaire installation.

1.11 WARRANTY

A. Warranty: Manufacturer and Installer agree to repair or replace components of luminaires that fail in materials or workmanship within specified warranty period.

1. Failures include, but are not limited to, the following:

a. Structural failures, including luminaire support components.
b. Faulty operation of luminaires and accessories.
c. Deterioration of metals, metal finishes, and other materials beyond normal weathering.

2. Warranty Period: (2) Two years from date of Substantial Completion.

PART 2 - PRODUCTS

2.1 PERFORMANCE REQUIREMENTS

A. Ambient Temperature: 41 to 104 deg F (5 to 40 deg C).

B. Altitude: Sea level to 1000 feet (300 m).

2.2 LUMINAIRE REQUIREMENTS

A. Electrical Components, Devices, and Accessories: Listed and labeled as defined in NFPA 70, by a qualified testing agency, and marked for intended location and application.

B. NRTL Compliance: Luminaires shall be listed and labeled for indicated class and division of hazard by an NRTL.

C. UL Compliance: Comply with UL 1598 and U.L. Listed for wet location if indicated.

D. Luminaire CRI: Minimum of 70 CRI unless noted otherwise or is specific to wildlife lighting requirements.

E. Luminaire CCT: 4000K unless noted otherwise on Drawings or is specific to wildlife lighting requirements.

F. Luminaire Rated Lamp Life: As comparable with luminaire model specified on Drawings.

G. Internal driver.

H. Nominal Operating Voltage: 120 V ac or 208 V ac.

I. Standards:

1. ENERGY STAR certified.
2. RoHS compliant.
3. Recessed luminaires shall comply with NEMA LE 4.
4. UL Listing: Listed for damp or wet location as indicated on drawings and in part numbers specified on the drawings.
5. Industrial luminaires Class 1, Division 2 Group.
6. Ratings below as indicated on drawings and in part numbers specified on the drawings:
   a. NEMA 4X
   b. IP 54
   c. IP 66
   d. IP 67

2.3 MATERIALS

A. Metal Parts: Free of burrs and sharp corners and edges.

B. Sheet Metal Components: Corrosion-resistant aluminum or Stainless steel. Form and support to prevent warping and sagging.

C. Doors, Frames, and Other Internal Access: Smooth operating, free of light leakage under operating conditions, and designed to permit relamping without use of tools. Designed to prevent doors, frames, lenses, diffusers, and other components from falling accidentally during relamping and when secured in operating position. Doors shall be removable for cleaning or replacing lenses.

D. Lens and Refractor Gaskets: Use heat- and aging-resistant resilient gaskets to seal and cushion lenses and refractors in luminaire doors.

E. Housings:

1. Rigidly formed, weather- and light-tight enclosure that will not warp, sag, or deform in use.
2. Provide filter/breather for enclosed luminaires.

F. Factory-Applied Labels: Comply with UL 1598. Labels shall be located where they will be readily visible to service personnel, but not seen from normal viewing angles where located in place.

1. Label shall include the following characteristics:

   a. CCT and CRI for all luminaires.

2.4 FINISHES

A. Variations in Finishes: Noticeable variations in same piece are unacceptable.

B. Luminaire Finish: Manufacturer's standard paint applied to factory-assembled and -tested luminaire before shipping. Where indicated, match finish process and color of pole or support materials.

C. Factory-Applied Finish for Aluminum Luminaires: Comply with NAAMM's "Metal Finishes Manual for Architectural and Metal Products" for recommendations for applying and designating finishes.

1. Finish designations prefixed by AA comply with the system established by the Aluminum Association for designating aluminum finishes.
2. Natural Satin Finish: Provide fine, directional, medium satin polish (AA-M32); buff complying with AA-M20 requirements; and seal aluminum surfaces with clear, hard-coat wax.
3. Class I, Clear-Anodic Finish: AA-M32C22A41 (Mechanical Finish: Medium satin; Chemical Finish: Etched, medium matte; Anodic Coating: Architectural Class I, clear coating 0.018 mm or thicker) complying with AAMA 611.
4. Class I, Color-Anodic Finish: AA-M32C22A42/A44 (Mechanical Finish: Medium satin; Chemical Finish: Etched, medium matte; Anodic Coating: Architectural Class I, integrally colored or electrolytically deposited color coating 0.018 mm or thicker), complying with AAMA 611.

a. Color: As selected from manufacturer's standard catalog of colors.

D. Factory-Applied Finish for Steel Luminaires: Comply with NAAMM's "Metal Finishes Manual for Architectural and Metal Products" for recommendations for applying and designating finishes.

1. Surface Preparation: Clean surfaces to comply with SSPC-SP 1, to remove dirt, oil, grease, and other contaminants that could impair paint bond. Grind welds and polish surfaces to a smooth, even finish. Remove mill scale and rust, if present, from uncoated steel, complying with SSPC-SP 5/NACE No. 1 or SSPC-SP 8.
2. Exterior Surfaces: Manufacturer's standard finish consisting of one or more coats of primer and two finish coats of high-gloss, high-build polyurethane enamel.

a. Color: As selected from manufacturer's standard catalog of colors.

2.5 LUMINAIRE SUPPORT COMPONENTS

A. Comply with requirements in Section 260529 "Hangers and Supports for Electrical Systems" for channel and angle iron supports and nonmetallic channel and angle supports.

PART 3 - EXECUTION

3.1 EXAMINATION

A. Examine substrates, areas, and conditions, with Installer present, for compliance with requirements for installation tolerances and other conditions affecting performance of the Work.

B. Examine roughing-in for luminaire electrical conduit to verify actual locations of conduit connections before luminaire installation.

C. Examine walls, roofs, canopy ceilings and overhang ceilings for suitable conditions where luminaires will be installed.

D. Proceed with installation only after unsatisfactory conditions have been corrected.

3.2 GENERAL INSTALLATION REQUIREMENTS

A. Comply with NECA 1.

B. Fasten luminaire to structural support.

C. Supports:

1. Sized and rated for luminaire weight.
2. Able to maintain luminaire position after cleaning and relamping.
3. Support luminaires without causing deflection of finished surface.
4. Luminaire-mounting devices shall be capable of supporting a horizontal force of 100 percent of luminaire weight and a vertical force of 400 percent of luminaire weight.

D. Wall-Mounted Luminaire Support:

1. Attached to structural members in walls.
2. Do not attach luminaires directly to gypsum board.

E. Wiring Method: Install cables in raceways. Conceal raceways and cables.

F. Install luminaires level, plumb, and square with finished grade unless otherwise indicated. Install luminaires at heights as indicated on Drawings.

G. Coordinate layout and installation of luminaires with other construction.

H. Adjust luminaires that require field adjustment or aiming.

I. Comply with requirements in Section 260519 "Low-Voltage Electrical Power Conductors and Cables" and Section 260533 "Raceways and Boxes for Electrical Systems" for wiring connections and wiring methods.

3.3 BOLLARD LUMINAIRE INSTALLATION:

A. Align units for optimum directional alignment of light distribution.

1. Install on concrete base with top 6 inches above finished grade or surface at luminaire location. Cast conduit into base, and shape base to match shape of bollard base. Finish by troweling and rubbing smooth. Concrete materials, installation, and finishing are specified in Section 033000 "Cast-in-Place Concrete."

3.4 INSTALLATION OF INDIVIDUAL GROUND-MOUNTED LUMINAIRES

A. Install on concrete base with top 6 inches above finished grade or surface at luminaire location. Cast conduit into base, and finish by troweling and rubbing smooth. Concrete materials, installation, and finishing are specified in Section 033000 "Cast-in-Place Concrete."

3.5 CORROSION PREVENTION

A. Aluminum: Do not use in contact with earth or concrete. When in direct contact with a dissimilar metal, protect aluminum by insulating fittings or treatment.

3.6 IDENTIFICATION

A. Identify system components, wiring, cabling, and terminals. Comply with requirements for identification specified in Section 260553 "Identification for Electrical Systems."

3.7 FIELD QUALITY CONTROL

A. Inspect each installed luminaire for damage. Replace damaged luminaires and components.

1. Operational Test: After installing luminaires, switches, and accessories, and after electrical circuitry has been energized, test units to confirm proper operation.

B. Luminaire will be considered defective if it does not pass tests and inspections.

3.8 ADJUSTING

A. Occupancy Adjustments: When requested within 12 months of date of Substantial Completion, provide on-site assistance in adjusting the direction of aim of luminaires to suit occupied conditions. Make up to two visits to Project during other-than-normal hours for this purpose. Some of this work may be required during hours of darkness.

1. During adjustment visits, inspect all luminaires. Replace lamps or luminaires that are defective.
2. Parts and supplies shall be manufacturer's authorized replacement parts and supplies.
3. Adjust the aim of luminaires in the presence of the Architect.

END OF SECTION 265619

THIS PAGE LEFT INTENTIONALLY BLANK

SECTION 27 00 00 - COMMUNICATIONS STRUCTURED CABLING SYSTEM

PART 1 – GENERAL

1.1 CONTRACTOR QUALIFICATIONS

The Structured Cabling System Contractor shall be an experienced firm regularly engaged in the layout and installation of structured cabling systems of similar size and complexity as required for this installation. The Structured Cabling System Contractor, under the same company name, shall have successfully completed the layout, installation, testing and warranty of not less than five Structured Cabling Systems of the scope of the largest system on this project for a minimum period of three years prior to the bid date, and shall have been regularly engaged in the business of Structured Cabling Systems contracting continuously since. The Structured Cabling System Contractor shall have an existing permanent office located within 100 miles of the job site from which installation and warranty service operations will be performed.

The Structured Cabling System Contractor shall have a BICSI Registered Communications Distribution Designer (RCDD) on staff who is a permanent employee of the company. The RCDD shall be in responsible charge of the project from start to finish.

The Structured Cabling System Contractor shall be in good standing with the Structured Cabling System Manufacturer as a Belden Certified Installer. The Structured Cabling System Contractor shall complete the Structured Cabling System Manufacturer's Certified Installer training program. The Structured Cabling System Manufacturer shall require that not less than two permanent employees of the Structured Cabling System Contractor complete the full certification program. Each Certified Installer shall attend re-certification classes every two years. The Structured Cabling System certified employees shall include not less than one designer and one installation supervisor. The Structured Cabling System Contractor shall present, with his bid, the names and credentials of the Belden certified installers who will be responsible for this project.

A. Contractor Qualifications – Conduit Installation:

All conduit and related work shall be provided by a licensed electrical contractor using tradesmen who are skilled and experienced in the types of conduit installations indicated in the bid documents.

B. Definitions

CM - Construction
Manager DB - Design
Build Contractor GC -
General Contractor

Where the three terms CM, DB, and GC are used in the specifications and TEL drawings they are used interchangeably. The Contractor shall understand the terms to mean the construction entity in overall charge of the project, whether a CM, DB or GC.

1.2 PROOF OF CONTRACTOR QUALIFICATIONS

The Structured Cabling System Contractor shall provide the following documentation, to be presented with his bid to the GC and following bids to the Owner within three working days of a request, as evidence that the requirements for Structured Cabling System Contractor qualifications listed above are satisfied. The Structured Cabling System Contractor shall meet the requirements of this specification section for structured cabling system work. All work under this section shall be performed by permanent employees of the Structured Cabling System Contractor listed on the bid form, and shall not be performed by another subcontractor, employees of another company, or by temporary employees. The only exceptions to these requirements shall be for conduit work, which may be performed by an electrical contractor meeting the minimum requirements of paragraph 1.1.A. Under no circumstances shall temporary employees be used for any work for these systems.

A. Provide a list of not less than five (5) references for jobs of similar size and complexity including project name, location, contact person and phone number.

B. Provide RCDD name, BICSI certification number, and qualifications.

C. Provide location of existing permanent office from which installation and warranty work will be performed.

D. Provide copies of certificates issued by Structured Cabling System Manufacturer proving that the Structured Cabling System Contractor is in good standing with Belden as a Certified Installer, and that the Structured Cabling System Contractor can offer the Owner a 25 year system warranty in partnership with the Structured Cabling System Manufacturer.

1.3 RELATED REQUIREMENTS

Drawings and general provisions of Contract apply to this section.

Electrical Specification Sections regarding conduit and raceway apply to work under this section, with the additions and modifications specified herein and on the TEL drawings. The special requirements indicated on the TEL drawings and in this specification section for structured cabling system conduit and all cable pathways shall take precedence over any requirements specified in Electrical Specification Sections.

1.4 DESCRIPTION OF WORK

The work consists of all labor, materials, equipment and services necessary to provide, install, test and certify all systems as described in the contract documents. The Structured Cabling System Contractor shall provide systems complete and ready for operation. The installation shall include all accessories and appurtenances required to provide a complete and operational system. Any materials not specifically mentioned in these specifications or not shown on the drawings but required for a complete and finished installation shall be furnished and installed at no additional cost to the Owner.

A. Special Warranty – Structured Cabling System:

The Structured Cabling System Contractor and The Structured Cabling System Manufacturer shall provide a 25 year warranty for the completed Structured Cabling System. The 25 year warranty shall commence on the date of Final Completion and Final Acceptance by the Engineer and the Owner.

The installed system shall be manufacturer certified and shall meet or exceed all performance criteria established by TIA/EIA Category 6 and Category 6A standards for unshielded UTP cabling. The electrical performance of all UTP cabling shall be characterized to 250 MHz for Category 6 cable and to 500 MHz for Category 6A cable and shall be proven by field testing of the Permanent Link.

The 25 year warranty shall cover the Structured Cabling System end-to-end and shall include parts and labor costs for replacement of defective parts or installation. The warranty shall also cover current applications plus all future applications approved to run on Category 6 and Category 6A cabling systems. The performance parameters guaranteed by The Structured Cabling System Manufacturer in published literature shall be based on worst case testing of a channel configuration using a 100 meter model constructed using four connection points consisting of a horizontal cross-connect, a consolidation point and a work area outlet.

The Structured Cabling System Contractor shall test all Category 6 and Category 6A cabling for the Permanent Link in strict accordance with TIA standards. The test results shall indicate that each cable achieved a PASS rating without exception.

The Structured Cabling System Contractor shall provide all necessary documentation to the Structured Cabling System Manufacturer required to properly register the system with the manufacturer for warranty purposes.

B. Scheduling:

The Structured Cabling System Contractor shall become thoroughly familiar with the overall project schedule and shall complete his work and make all systems fully operational prior to the date of occupancy of the facilities by the Owner.

The Structured Cabling System Contractor shall coordinate all work with the General Contractor and the Electrical Contractor, as well as all other trades.

The Structured Cabling System Contractor shall be responsible for coordinating all work related to cable pathways indicated on the TEL sheets, even if that work is being performed by the project electrical contractor. The Structured Cabling System Contractor shall inform the General Contractor if:

1) The conduit work is not being completed in accordance with the requirements indicated on the TEL drawings and this specification.

2) The conduit work is not being completed in such a manner that will allow the Structured Cabling System Contractor to complete his work in a timely manner in accordance with the project schedule and this section

The Structured Cabling System Contractor shall provide adequate training of the Owner's forces prior to the date of occupancy and shall provide follow-up training after occupancy. Total training time shall be as prescribed by this specification is considered a minimum requirement.

1.5 EXAMINATION OF SITES AND TOTAL SYSTEM RESPONSIBILITY

Prior to providing a proposal for this work, the Contractor shall visit the proposed site of work to become familiar with any condition that may affect the work to be performed in any way. No allowances shall be made because of lack of knowledge of these conditions.

The Contractor shall have total system responsibility to assure a fully operational system. Any additional labor and components required for the installation of complete operating systems but not specifically required by the bid documents shall be provided and the cost borne by the Contractor.

The Contractor shall remain the sole owner of the system and all of its components provided under this contract and is responsible for all risk of loss or damage of the system for the entire contract period up to and including the date and time of Final Acceptance by the Engineer and the Owner's Project Manager. After the date of Final Acceptance, the Owner shall assume full ownership of the system with all components, and the warranty period shall commence.

1.6 QUALITY ASSURANCE

Materials shall be new and shall be the best of their respective kinds. All work shall be accomplished in a workmanlike manner in keeping with the best practices and highest standards of the telecommunications industry.

Protect materials and equipment from physical or environmental damage during shipping, storage and installation. Equipment and materials shall be received at the site in new condition and shall be maintained in new condition throughout the installation process. Damaged or deteriorated equipment and materials will not be acceptable. The Contractor shall be responsible for the safety and condition of all materials and equipment, whether stored or installed, until Final Acceptance by the Engineer and the Owner.

1.7 CODES AND STANDARDS

All work done under this contract shall be performed in accordance with the most recent issue of the following codes, standards and guidelines. Where there is a perceived conflict between a standard or guideline and the contract documents, the Contractor shall perform the work as directed by the Engineer.

NFPA 70	National Electric Code - 2020 Edition
NFPA 90A	Standard for the installation of Air-Conditioning and Ventilating Systems – 2021 edition
NFPA 101	Life Safety Code - 2021 Edition
FBC	Florida Building Code – 2023 8th Edition Florida Fire Prevention Code – 2023 8th Edition Florida Building Code Accessibility – 2023 8th Edition
TIA	Telecommunications Industry Association, current edition of each standard at the time of bids applies (regardless of edition indicated below)
TIA-568.0-E	Generic Telecommunications Cabling for Customer Premises

TIA-568.1-E	Commercial Building Telecommunications Infrastructure Standard
TIA-568.2-E	Balanced Twisted-Pair Telecommunications Cabling and Components Standard
TIA-568.3-E	Optical Fiber Cabling and Components Standard
TIA-568.4-D	Broadband Coaxial Cabling and Components Standard
TIA-569-E	Telecommunications Pathways and Spaces
TIA-598-D	Optical Fiber Cable Color Coding
TIA-526-7-A	Standard Test Procedures for Fiber Optic Systems (Singlemode Fiber Optical Power Loss measurement TIA-526-7 Revision A 2015 and Multimode Fiber Optical Power Loss measurement TIA-526-14 Revision C 2015).
TIA-606-D	Administration Standard for Commercial Telecommunications Infrastructure
TIA-607-E	Generic Telecommunications Bonding and Grounding (Earthing) for Customer Premises
TIA-758-B	Customer-Owned Outside Plant Telecommunications Infrastructure Standard
TIA-862-C	Structured Cabling Infrastructure Standard for Intelligent Building Systems
IEEE	Institute of Electrical and Electronics Engineers
	IEEE 802-2001, IEEE Standard for Local and Metropolitan Area Networks: Overview and Architecture
IEEE	LAN/MAN Bridging & Management (802.1)
	IEEE 802.1f-1993, IEEE Standard for Local and Metropolitan Area Networks: Common Definitions and Procedures for IEEE 802 Management Information
	IEEE 802.1h, 1997 Edition (R2001) (ISO/IEC TR11802-5: 1997), IEEE Technical Report and Guidelines--Part 5: Media Access Control (MAC) Bridging of Ethernet V2.0 in Local Area Networks
	IEEE 802.1b, 1995 Edition (ISO/IEC 15802-2-1995), IEEE Standard for Information technology--Telecommunications and information exchange between systems--IEEE standard for local and metropolitan area networks--Common specifications--Part 2: LAN/MAN Management

IEEE 802.1d, 1998 Edition (ISO/IEC 15802-3:1998, IEEE Standard for Information technology--Telecommunications and information exchange between systems--IEEE standard for local and metropolitan area networks–Common specifications--Media access control (MAC) Bridges

IEEE 802.1t-2001, Amendment to IEEE Std 802.1D, 1998 Edition IEEE Standard for Information technology--Telecommunications and information exchange between systems--Local and metropolitan area networks--Common specifications--Part 3: Media Access Control (MAC) Bridges: Technical and Editorial Corrections

IEEE 802.1w-2001, IEEE Standard for Information technology--Telecommunications and information exchange between systems--Local and metropolitan area networks--Common specifications Part 3: Media Access Control (MAC) Bridges--Amendment 2--Rapid Reconfiguration [Amendment to IEEE Std 802.1D, 1998 Edition (ISO/IEC 15802-3:1998) and IEEE Std 802.1t-2001]

IEEE 802.1e, 1994 Edition, IEEE Standard for Information technology–Telecommunications and information exchange between systems--IEEE standard for local and metropolitan area networks--Common specifications--Part 4: System Load Protocol

IEEE 802.1g, 1998 Edition, Information technology--Telecommunications and information exchange between systems--IEEE standard for local and metropolitan area networks--Common specifications--Part 5: Remote Media Access Control (MAC) bridging

IEEE 802.1q-1998, IEEE standard for local and metropolitan area networks: Virtual Bridged Local Area Networks

P802.1s/D13, Draft IEEE Standard for Local and Metropolitan Area Networks--Amendment 3 to IEEE 802.1q Virtual Bridged Local Area Networks: Multiple Spanning Trees

IEEE 802.1u-2001, (Amendment to IEEE Std 802.1q, 1998 Edition) IEEE Standard for Local and metropolitan area networks--Virtual Bridged Local Area Networks--Amendment 1: Technical and editorial corrections

IEEE 802.1v-2001, (Amendment to IEEE Std 802.1q, 1998 Edition) IEEE Standards Amendment to IEEE 802.1q: IEEE Standards for Local and Metropolitan Area Networks: Virtual Bridged Local Area Networks--Amendment 2: VLAN Classification by Protocol and Port

IEEE 802.1x2001 IEEE Standards for Local and Metropolitan Area Networks: Port-Based Network Access Control

IEEE CSMA/CD Access Method (802.3)

IEEE 802.3-2002® IEEE Standard for Information technology--Telecommunications and information exchange between systems-Local and metropolitan area networks--Specific requirements -Part 3:

Carrier Sense Multiple Access with Collision Detection (CSMA/CD) Access Method and Physical Layer Specifications. Incorporates the IEEE 802.3z Standard for 1000BASE-X Gigabit Ethernet over fiber optic cabling and the IEEE 802.3ab Standard for 1000BASE-T Gigabit Ethernet over copper UTP cabling.

IEEE 802.3ae-2002 (standard ratified June 2002)
Supplement to IEEE 802.3 CSMA/CD Access Method & Physical Layer Specifications - Media Access Control (MAC) Parameters, Physical Layer, and Management Parameters for 10Gb/s Operation

IEEE 802.3at Amendment: Data Terminal Equipment (DTE) Power Via the Media Dependent Interface (MDI) Enhancements (PoE Plus)

IEEE — Wireless LANs (802.11)

IEEE Std 802.11, 1999 Edition, IEEE Standard for Information Technology - Telecommunications and Information Exchange between Systems - Local and Metropolitan Area Network - Specific Requirements - Part 11: Wireless LAN Medium Access Control (MAC) and Physical Layer (PHY) Specifications

IEEE 802.11a-1999, Information technology—Telecommunications and information exchange between systems—Local and metropolitan area networks—Specific requirements—Part 11: Wireless LAN Medium Access Control (MAC) and Physical Layer (PHY) specifications—Amendment 1: High-speed Physical Layer in the 5 GHz band (An errata is available)

IEEE 802.11b-1999 Supplement to 802.11-1999,Wireless LAN MAC and PHY specifications: Higher speed Physical Layer (PHY) extension in the 2.4 GHz band

IEEE 802.11d-2001, Amendment to IEEE 802.11-1999, (ISO/IEC 8802-11) Information technology--Telecommunications and information exchange between systems--Local and metropolitan area networks--Specific requirements--Part 11: Wireless LAN Medium Access Control (MAC) and Physical Layer (PHY) Specifications: Specification for Operation in Additional Regulatory Domains

IEEE 802.n-2009, Amendment 5 to IEEE 802.11-1999, Enhancements for Higher Throughput

IEEE 802.11ac, Enhancements for very high throughput WLANs

IEEE 802.11ax-2021 High Efficiency WLANs (WiFi-6)

BICSI — Building Industry Consulting Service International

Telecommunications Distribution Methods Manual (TDMM) Latest Edition

Network Design Reference Manual (NDRM) Latest Edition

Outside Plant Design Reference Manual (OSPDRM) – Latest Edition

Telecommunications Cabling Installation Manual (TCIM) Latest Edition

AT&T "Outside Plant Engineering Handbook"

All materials and equipment shall be UL listed for the intended application.

1.8 PRE-INSTALLATION SUBMITTALS

A. Manufacturer's Catalog Data:

Submit five (5) copies of manufacturer's standard descriptive data sheets to the Engineer for review and approval prior to commencing work. Furnish complete data sheets bearing the printed logo or trademark of the manufacturer for each type of product being provided. Mark each copy of the data sheets for the specific product being provided with an identifying mark, arrow, or highlighting. The following items shall be submitted:

1. Conduit and Pull Boxes, Fittings, Related Hardware & Accessories, each type
2. Handholes
3. Backboards (cabinet grade AC plywood)
4. Cable Runway, Fittings, Related Hardware & Accessories, each type
5. Racks, Related Hardware & Accessories, each type
6. Enclosures and Cabinets, each type
7. WAP mounts, each type
8. Copper Patch Panels, each type
9. Copper Wiring/Patch Blocks, each type
10. Category 6 UTP Cable , each type
11. Category 6A Cable, each type
12. Category 6 and 6A horizontal patch panels, frames and inserts, each type
13. Burial grade Category 6 and Category 6A cables
14. Patch Cables - Copper and Fiber Optic, each type
15. Patch Cord Organizers and Cable Rings, each type
16. Wire Management Devices, each type
17. Communications Outlets (CO), each type
18. Special Purpose Outlets, each type
19. Power Surge Protectors
20. Uninterruptible Power Supplies (UPS), each type
21. Grounding Busbars and Lugs, each type
22. Firestopping Systems, each type
23. Labeling Products, each type
24. All other materials and equipment indicated to be furnished under this section, whether specifically listed here or not.

B. Pre-Installation Drawings:

As part of the Structured Cabling System installation, the Contractor shall provide detailed documentation to facilitate system administration, maintenance, and future moves, adds and changes. Drawings shall be provided which incorporate all information in the Contract Drawings, and which fully document any and all Engineer approved changes in materials and methods made by the Contractor. Drawings are not required if no changes to the design are made by the Contractor. Changes to the design shall not be made without the

prior written approval of the Engineer. Drawings shall provide the same level of detail as the bid documents. *Electronic files of the Engineer's AutoCAD drawings will not be provided to the Contractor*.

Drawings shall be prepared using AutoCAD Release 14 and shall be furnished in hard-copy format and on industry standard CD or ZIP drive media.

Submit five (5) copies of pre-installation drawings to the Engineer for review and approval prior to commencing work.

1.9 CONTRACTOR'S RECORD DOCUMENTS

The Structured Cabling System Contractor shall maintain a full set of contract documents at the job site at all times, consisting of specifications, drawings, addenda, pre-installation submittals, change orders, and change directives. The record documents shall be updated by the Contractor, in red pen and on a daily basis, to show the following:

1. Final location of all Communications Outlets, Wireless Access Points, and security cameras.
2. Final conduit routing.
3. Location of all buried utilities encountered during the course of work on this project.
4. Final location of all handholes, pull boxes, and access doors.
5. Any changes to the work authorized by the Owner/Engineer.
6. Any other pertinent information that may be of value to the Owner in operating and maintaining the system.

The Contractor's record documents shall be available for viewing by the Engineer or the Owner at the site at any time and shall be presented and reviewed by the Contractor at each construction progress meeting. The record documents shall be clearly marked "Record Set", shall be kept in a protected location, and shall not be used for general construction purposes. The record documents shall be provided to the Engineer at the close of the project.

The Engineer will provide a full set of Adobe Acrobat *.PDF format drawings to the Contractor. The Contractor shall be required to annotate (redline) the Adobe Acrobat *.PDF format drawings using Adobe Acrobat to reflect all changes recorded in the field as required by the paragraph "CONTRACTOR'S RECORD DOCUMENTS". The Contractor shall provide a copy of the Adobe Acrobat *.PDF files on CD with each set of O&M Manuals and shall provide an additional copy on CD to the Engineer. The Contractor shall also provide 11"x17" laser prints of Adobe Acrobat *.PDF drawings in each O&M Manual.

PART 2 - PRODUCTS

2.1 GENERAL

All materials, equipment, and devices shall be new and unused, of current manufacture and of the highest grade, free from defects.

All products shall be the manufacturer and model or part number specified. Where a model or part number is indicated in error for any reason, the Contractor shall verify the intent of the Engineer prior to providing a proposal and shall provide the product intended by the Engineer. Where a manufacturer has updated or improved a product subsequent to

issuance of the bid documents by the Engineer, the Contractor shall provide the updated or improved product at no additional cost to the Owner.

Provide new equipment and materials only. Each component shall be the most recent model number, revision, or update offered by the manufacturer at the time of purchase by the Contractor. Newly manufactured containing used or rebuilt parts, remanufactured, rebuilt, reconditioned, used, shopworn, demonstrator or prototype equipment is not acceptable and will be rejected. Each major component of telephone and data systems equipment provided under this contract shall include a certification from the manufacturer stating that the equipment is new and referencing the serial number of the delivered equipment. The Contractor shall track the placement of each major component in the field and shall provide the Owner a list identifying each component by manufacturer, model number, serial number, and installed location (example rack number and rack position).

All materials, equipment and devices shall meet the requirements of UL where UL standards are established for those items, and the requirements of NFPA 70.

All like items of material or equipment shall be the same product of the same manufacturer, model number and production series.

All materials and equipment shall be a standard catalogued product of a manufacturer regularly engaged in the manufacture of similar products.

2.2 PRODUCT SPECIFICATIONS

See drawings for all product requirements not indicated in these specifications. The Structured Cabling Contractor shall be responsible for providing and installing all components indicated in these specifications and on the drawings, unless specifically indicated to be provided by others.

A. Structured Cabling System:

Provide all system components as indicated the drawings. To ensure a uniform basis for bidding, and to standardize the Owner’s facilities, base all bids on the particular systems, equipment and materials specified.

B. Data and Wireless Systems:

See drawings for data cabling system specifications and equipment mounting requirements.

Data equipment and wireless LAN equipment shall be Owner Furnished Contractor Installed (OFCI) as indicated on the drawings, unless specifically indicated otherwise.

Provide a system of data cabling as indicated on the drawings, to include wiring for Wireless Access Points, security camera systems and network interfaces to other systems as indicated on the drawings.

Wireless Access Points:

The Contractor shall install new WAPs furnished by the Owner at WAP locations indicated on the drawings and finalized by the Owner. WAPs shall be Owner Furnished Contractor

Installed (OFCI) as indicated on the drawings. WAP mounts shall be Contractor Furnished Contractor Installed (CFCI).

The Structured Cabling System Contractor shall provide two Category 6A cables to each and WAP location in support of Owner furnished equipment. Direct terminate and test, coil slack in ceiling cavity at each WAP and at the Communications Closet.

C. Telephone System:

The Owner will provide VOIP equipment, handsets and all programming and system setup.

PART 3 - EXECUTION

3.1 GENERAL

The installation shall be in strict accordance with all applicable codes and standards, the respective manufacturer's written recommendations, and the contract drawings and these specifications.

Workmanship shall be of the highest grade in accordance with the best modern practice and the highest standards of the telecommunications industry.

The installed system shall be neat, clean, and well organized in appearance. Provide working clearances for normal system operation, reconfiguration and repair.

The completed installation shall meet with the approval of the Owner’s Project Manager and the Engineer.

The General Contractor and the Structured Cabling System Contractor (SCSC) shall share full responsibility for protecting all communications outlets, the CC and all structured cabling system components from dust and debris during construction and until final completion of the project. The SCSC shall not install racks, wire managers, patch panels, protector blocks, 66 blocks, or dress out and terminate cables until paint, backboards and floors in the CC are completely finished and those rooms are completely isolated from dust infiltration with plastic sheeting and duct tape. All COs jacks shall be protected by bagging and sealing dust tight at all times after connectivity devices are installed. All system components that, in the sole judgment of the Engineer, are exposed to excessive accumulation of construction dust/debris at any stage of the project shall be removed and replaced with new components at no additional cost to the Owner. Lay-in ceiling grids in the CC shall be installed after conduits and cable trays and cable runways have been installed to allow the ceiling installer to trim around conduits. Lay-in ceiling tiles in these areas should follow completion of cable dressing into racks.

The SCSC shall not install racks, wire managers, patch panels, protector blocks, 66 blocks, or dress out and terminate cables until paint, backboards and floors in the CC are completely finished and those rooms are completely isolated from dust infiltration with plastic sheeting and duct tape.

A. Delivery:

Protect materials and equipment from physical or environmental damage during shipping,

storage and installation. Equipment and materials shall be received at the site in new condition in original factory sealed cartons and shall be maintained in new condition throughout the installation process. Damaged or deteriorated equipment and materials will not be acceptable. The Contractor shall be responsible for receiving and storing of all equipment and materials and shall be responsible for the safety and condition of all materials and equipment, whether stored or installed, until Final Acceptance by the Engineer and the Owner.

B. Data Equipment:

See drawings for data cabling system specifications. Provide a system of data cabling as indicated on the drawings, to include wiring for Wireless Access Points, security camera systems and network interfaces to other systems as indicated on the drawings.

Data equipment and wireless LAN equipment shall be Owner Furnished Contractor Installed (OFCI) as indicated on the drawings, unless specifically indicated otherwise.

Wireless Access Points:

The Contractor shall install new WAPs furnished by the Owner at WAP locations indicated on the drawings and finalized by the Owner. WAPs shall be Owner Furnished Contractor Installed (OFCI) as indicated on the drawings. WAP mounts shall be Contractor Furnished Contractor Installed (CFCI).

The Structured Cabling System Contractor shall provide two Category 6A cables to each and WAP location in support of Owner furnished equipment. Direct terminate and test, coil slack in ceiling cavity at each WAP and at the Communications Closet.

Power Cords: The Structured Cabling System Contractor shall route Owner furnished power cords connecting all Owner Furnished data equipment to rack power strips or uninterruptible power supplies as indicated on the drawings. Cords shall route from equipment, up or down on racks attached to standoff brackets as indicated on drawings, and over to rack power strips or UPS connections. Properly routed and secure at 12 inches on center, with only one cord allowed per connection, and neatly coiling excess cord length and securing coil with black velcro.

Coordinate all related work with the Owner's Project Manager and District IT staff.

C. Telephone System:

The Owner will provide a VOIP based telephone system with handsets (OFOI).

Provide and install patch cords from VOIP connections to horizontal wiring connections as specified herein and as indicated on the drawings.

See drawings for specific requirements.

Coordinate all work with the Owner and the telephone service provider.

F. Conduit Installation:

All conduit shall be installed by a licensed electrical contractor using tradesmen who are

skilled and experienced in the types of conduit installations indicated in the bid documents.

All backbone cabling shall be run continuously in conduit.

The following horizontal cabling, along with any other cabling so indicated on the drawings shall be run continuously in conduit:

1. All Category 6 cabling for special circuits shall be run continuously in conduit.
2. All Category 6 and 6A cabling run in exposed structure spaces without ceilings limited to mechanical equipment rooms, electrical equipment rooms and storage rooms with no ceilings, shall be installed continuously in conduits extended to accessible lay-in ceiling areas at each end.
3. All Category 6 and 6A cabling run above hard ceilings shall be installed continuously in conduits extended to accessible lay-in ceiling areas at each end.
4. Where specifically indicated elsewhere horizontal cabling shall be installed continuously in conduit.

Do not pull cables in conduits until plastic insulating bushings have been installed. Cables installed in conduits without plastic insulating bushings shall be removed and replaced with new cables.

Rack conduits and run together wherever possible.

Conduit shall be installed with top-grade workmanship, using factory bends or field bends made with the proper tools. Kinked, dented or otherwise improperly constructed bends will not be accepted. All bends shall have a minimum radius of six times the internal conduit diameter.

All conduit shall be routed parallel and perpendicular to building lines, up high and over piping, ductwork, conduit and other utilities. Conduit in exposed locations shall be run as high as possible, secured with heavy duty galvanized two-hole supports, and otherwise installed to prevent damage from pulling, hanging, etc.

Install plastic insulating bushings on the ends of all conduits prior to installing cables. Provide conduit end fitting with threaded end and threaded plastic insulating bushing on all EMT conduit ends. Provide UL listed threaded malleable iron insulated grounding bushing on all IMC or RMC conduit ends – add on grounding clamps will not be accepted. Cables installed without plastic insulated bushings or insulated grounding bushings in place shall be removed, the proper bushings installed, then the cables reinstalled, terminated and tested – no exceptions will be made to these requirements.

Firestop all conduit penetrations of all aboveground floors, all conduit penetrations of walls that extend to the underside of the floor or roof deck above, and all conduit penetrations of all walls indicated as fire rated on the architectural drawings. Accomplish firestopping using UL classified systems with fire rating equal to or greater than the fire rating of the floor or wall assembly penetrated. Firestop systems shall be 3M, Nelson or Engineer approved equal. Install in strict accordance with the manufacturer's printed instructions and the conditions of the UL approval for each firestop system used.

All conduit penetrations of walls indicated as smoke walls on the architectural drawings and all conduit penetrations of walls that do not extend to the underside of the floor or roof deck above shall be sealed smoketight and acoustically with smoke-sound caulking UL listed for the purpose such as USG Firecode, STI Smoke ‘N’ Sound, or Hilti CP 506.

All buried conduit shall be Schedule 80 electrical grade PVC conduit. All PVC conduit joints shall be cleaned and glued for a watertight connection. Terminate ends of PVC conduit at closets and handholes with end bells.

Seal all underground conduits at handholes and at building entry points following cable installation to prevent the entry of water into buildings, and to prevent the entry of water or debris into the conduits from the handhole or building side. Sealant shall be POLYWATER FST-250 and shall be installed using factory caulking tube, mixing nozzle, damming strips (all included in FST-250KIT1) package.

Buried warning and identification tape: Provide metallic detection tape manufactured specifically for warning and identification of buried utilities. Install tape directly above each buried conduit at depth of 10 to 12 inches below grade for entire length of conduit. Tape shall be detectable by any standard Non-Ferric Metal Detector. Provide tape in rolls, 2 inches minimum width, color orange, with warning and identification imprinted in bold black letters continuously and repeatedly over entire tape length. Warning and identification shall read "CAUTION BURIED COMMUNICATIONS LINE BELOW". Use permanent code and letter coloring unaffected by moisture and other substances contained in backfill material.

Underground Conduit Validation:

Following installation of underground conduits, perform the following operation for each conduit:

Clean, lubricate and validate each installed conduit for serviceability by running a full size rubber duct swab through the conduit from end to end. Conduits that are obstructed may be cleaned using a wire brush mandrel, then revalidated with the full size rubber duct swab. Conduits that do not allow passage of the full size rubber duct swab shall be replaced.

Pull Tapes: As backbone cabling runs are installed, provide a continuous marked pull tape (Carlon TL3821800 lb. tensile strength) for the full length of the end-to-end cable run with 10 feet of slack at each end pulled in alongside cabling. Bundle slack neatly at each end and tie off to conduit support strut at each end. Provide continuous factory uncut lengths of pull tape from end-to-end - under no circumstances shall pull partial length section of pull tape be tied together.

Spare Conduits: For conduits that are indicated as spare, install a continuous marked pull tape (Carlon TL382 1800 lb. tensile strength) for the full length of the end-to-end conduit run with 10 feet of slack at each end, tie each end of the tape to a blank duct plug with rope tie tab, push slack tape back into conduit, and install a duct plug in each conduit end for a watertight seal.

G. Cabling Installation:

Do not pull cables in conduits until plastic insulating bushings have been installed. Cables installed in conduits without plastic insulating bushings shall be removed and replaced with new cables.

Cabling free-routed above ceiling: Category 6 and Category 6A cabling otherwise allowed to be free-routed shall be free-routed only where concealed above lay-in ceilings only for those applications not identified to run continuously in conduit. Install horizontal cabling shown to be free-routed parallel and perpendicular to building lines, up high and over piping, ductwork, conduit and other utilities, and in protected locations. All cabling shall be neatly and symmetrically bundled (maximum individual bundle size shall be as indicated on the

drawings), bound with Velcro wraps at a minimum of four feet on center, properly supported, and otherwise installed as indicated on the drawings. Provide plenum rated color black Velcro for Category 6 cables and plenum rated color cranberry Velcro for Category 6A cables outside of the Communications Closet. Within the CC provide non-plenum rated Velcro, color to match horizontal cable jacket colors and patch cord colors. Support all free-routed horizontal cabling bundles individually with Category 5 J-hooks (Erico "CABLCAT") at a minimum of four feet on center. Attach J-hooks to building structural members only using factory support system components. Secure cables bundles within J-hooks with factory contact free containment cable ties. Do not attach J-hooks to ceiling grids, ceiling supports, piping, ductwork, conduit or anything other than building structural members unless specifically approved by the Engineer. Do not support free-routed horizontal cabling by running over or directly attaching to building structural members, piping, ductwork, conduit or any other utility. Always bundle Category 6 and Category 6A cables separately. A maximum of 24 cables shall be included in each cable bundle, regardless of cable type.

Conduit sleeves for free-routed horizontal CAT 6 and CAT 6A: Final routing paths for free-routed horizontal cabling shall be determined by the contractor in the field. For this reason conduit sleeves are not indicated on the drawings. The contractor shall provide EMT conduit sleeves in the quantities and locations required to suit the contractor selected horizontal cable routing and as required for a complete installation, regardless of whether those sleeves are indicated on the drawings or not, and at no additional cost to the Owner. At locations where horizontal cabling runs through mechanical or electrical equipment rooms, the riser room, or storage rooms with exposed structure ceiling, all such cabling shall be run in continuous conduit sleeves extending to the nearest accessible lay-in ceiling at both ends. In addition, the contractor shall provide conduit sleeves traversing inaccessible (hard) ceiling or soffit areas and extending to the nearest accessible lay-in ceiling at both ends for cable pass-thru - provide access panels in inaccessible ceilings as required to install sleeves. Sleeves shall be sized for maximum 30 percent cable fill and shall be constructed and provided with pull boxes and access doors per the general aboveground conduit notes on the drawings.

Provide wire management devices on backboards and racks as indicated and as required to facilitate organized routing of cables and patch cords. Bundle cables together behind racks and fan out to points of termination. The finished installation shall meet the approval of the Engineer for overall quality and neatness of appearance.

The Contractor, in providing a bid for the system in accordance with the contract documents, agrees to install all cabling in the conduit and wireway paths indicated in the contract documents, or to provide larger conduit and wireway paths as he deems necessary, at no additional cost to the Owner. The Contractor shall be fully responsible for any and all damage to cabling that may occur during the installation and shall replace any damaged cabling with new cabling of the type specified for the application.

Firestop all cable penetrations of all aboveground floors, all cable penetrations of walls that extend to the underside of the floor or roof deck above, and all cable penetrations of all walls indicated as fire rated on the architectural drawings. Accomplish firestopping using UL classified systems with fire rating equal to or greater than the fire rating of the floor or wall assembly penetrated. Firestop systems shall be 3M, Nelson or Engineer approved equal. Install in strict accordance with the manufacturer's printed instructions and the conditions of the UL approval for each firestop system used.

All cable penetrations of walls indicated as smoke walls on the architectural drawings and all cable penetrations of walls that do not extend to the underside of the floor or roof deck above shall be sealed smoketight and acoustically with smoke-sound caulking UL listed for the

purpose such as USG Firecode, STI Smoke 'N' Sound, or Hilti CP 506.

H. Identification and Labeling:

The Structured Cabling System Contractor shall purchase and use professional labeling software and labeling products to generate all labels for this project, with the exception of engraved plastic tags and laminated paper tags, which shall be fabricated as indicated on the drawings, and elsewhere as indicated below. The Contractor shall determine the proper labeling product for each application and include a list of each product and application with the Pre-Installation Submittals.

All labels shall be produced using a laser printer and shall be clear and easily readable. Minimum text size shall be 12 point. Text font shall be ARIAL or ARIAL NARROW. Handwritten labels are not acceptable.

Label each horizontal cable and backbone cable using self-adhesive self-laminating polyester wrap-around labels with laser printed text as follows:

Label each Horizontal Category 6 and Category 6A cable cable at each end. Label text shall be based on the nomenclature indicated on the drawings.

Label each Fiber Optic Backbone Cable at each end. Label text shall be based on the nomenclature indicated on the drawings.

Label each Communications Outlet using non-adhesive card labels with laser printed text. Insert labels under outlet manufacturer's plastic label covers centered and straight. Label text shall be based on the Communication Outlet Identification Nomenclature and labeling details indicated on the drawings.

Label each Category 6 and Category 6A Horizontal Patch Panel port using non-adhesive or self-adhesive labels with laser printed text. The Contractor shall first attach the adhesive labels to the perforated paper labels supplied by the patch panel manufacturer, then insert the paper labels into the plastic covered icon-label holders supplied by the patch panel manufacturer. Label text for each patch panel port shall be based on the Horizontal Patch Panel Labeling Nomenclature and labeling details indicated on the drawings.

Label each Backbone Fiber Optic Cable Drawer with 1" high bold text printed on clear self- adhesive paper and attached to the reverse side of drawer manufacturer's paper label. Label text shall be based on the 'Fiber Optic Backbone Cable Nomenclature' indicated on the drawings to indicate source (CER) and each destination (respective CC or CP).

Label each Communications Panel, Rack and other devices as indicated on the drawings.

Provide data sheets describing all proposed labeling products with Pre-installation Submittals.

3.2 CABLE TESTING

A. General:

Prior to installation of cabling, visually inspect all cables, cable reels, and shipping

cartons to detect possible cable damage incurred during shipping and transport. Return visibly damages goods to the supplier and replace with new.

If post-manufacture performance data has been supplied by the manufacturer of cables or connecting hardware, copies of such data are to be kept for inclusion in the Documentation and made available to the Owner upon request.

After cabling installation and labeling is complete, but prior to the installation of patch cords, the Contractor shall test all cables. As part of cable test procedures verify all labeling and correct all inaccurate labeling.

The Contactor shall be in responsible charge of all cable testing procedures and shall provide an original signed letter in each project Operation & Maintenance (O&M) manual certifying that all cables have been tested in compliance with the contract documents and have met or exceeded the requirements stated therein.

Tests shall be performed in strict accordance with the test instrument manufacturer's printed instructions.

One hundred percent of all cables shall be tested.

Technicians performing testing shall be thoroughly trained in the use of the test instruments employed. Factory certification of technicians is mandatory. The Contractor shall provide evidence of training and copies of certificates to the Engineer.

The Contractor is responsible for supplying all test equipment and related materials required to test the entire Structured Cabling System. Test instruments shall be calibrated and traceable to the National Institute of Standards (NIST). Test instruments shall have been recently calibrated. The Contractor shall provide evidence of test instrument calibration if requested by the Engineer.

The requirement for this project is full compliance/zero tolerance. Cables that do not comply with the stated standards shall be removed and replaced with new. Partial use of cables by claiming good pairs or strands and abandoning others is not allowable. Defective cables shall be removed and replaced with new.

Notify the Owner in writing not less than five days prior to commencing cable testing. The Owner may elect to be present for and witness cable testing.

The Contractor shall be required to retest installed cables in the Owner's presence to verify the Contractor's test documentation. The percentage of cables to be retested shall be determined by the Owner based on compliance of the installation with the contract documents, quality of workmanship, and results of initial cable tests. Retesting shall be performed as required until all cables, in the judgment of the Owner, comply with the requirements of the contract documents.

B. Cable Test Results:

All cable test results shall be provided as part of the project Installation and Maintenance (O&M) Manuals.

C. Category 6 UTP Cable

Testing: Testers:

Each Category 6 cable shall be tested with Fluke Networks DSP-4300 Digital Cable Analyzers utilizing Fluke Networks DSP-LIA101 Universal Permanent Link Interface Adapters and the appropriate Personality Modules. In addition, each tester shall be calibrated prior to commencing testing for this project using a Fluke Networks DSP-PLCAL Universal Permanent Link Calibration Kit and Fluke Networks 'Linkware' software.

Prior to testing, electronically update tester software using the tester manufacturer's 'Linkware' software update utility. Update to the software version current at time tests are performed. Under no circumstances shall a tester with outdated software be used.

General:

Testing shall be of the Permanent Link. However, the Structured Cabling System Contractor and the Structured Cabling System Manufacturer shall warrant performance based on Channel performance and provide shall patch cords that meet Channel performance requirements.

All test results shall be maintained in the native file format of the tester manufacturer's 'Linkware' software. Under no circumstances shall be data be modified by other software, edited in any manner, or exported to a database, spreadsheet, work processor program or any other type of program that would allow access to the data for modification. Hardcopy printouts of test reports in Summary Format shall be generated directly from the 'Linkware' software. Detailed test results in Text Format shall be provided to the Owner in native 'Linkware' data format on a CD. In addition, detailed test results in Text Format shall be provided to the Owner in Adobe Acrobat *.PDF format on a CD. CDs shall be included in the project Operation and Maintenance (O&M) manuals.

Record all test conditions and setup parameters and include in a typed discussion to be provided with test documentation.

Verify correct labeling of patch panels and communications outlets prior to and during testing. If any label is found to be in error, correct before proceeding with testing. Circuit Identification (cable I.D.) in cable test reports shall be exactly the same as the outlet labeling based on the nomenclature indicated on the drawings.

Testing:

After installation, termination and labeling of the Category 6 UTP cable is complete and approved by the Structured Cabling System Contractor's RCDD, test each cable in accordance with all applicable TIA/EIA standards for UTP Category 6, and complete all operations required for a Panduit Certified Cabling System and 25 year Belden System Warranty.

Prior to testing, electronically update tester software using the tester manufacturer's 'Linkware' software update utility. Update to the software version current at time tests are performed. Under no circumstances shall a tester with outdated software

be used.

Test each cable to verify compliance with TIA/EIA specifications for Category 6 UTP, Permanent Link configuration, Level III accuracy, with no allowable deviation. Test at the full range of frequencies indicated by TIA/EIA up to and including 250 MHz.

Test using the tester manufacturer's standard TIA/EIA Category 6 Autotest. Under no circumstances shall a Custom Cable Autotest designed by the tester manufacturer specifically for a given cable manufacturer or structured cabling system manufacturer be used to test cables. All tests and testing procedures for this project shall be strictly based on TIA/EIA standards. Enter the proper Nominal Velocity of Propagation (NVP) for the specific cable(s) installed. Test for the following parameters:

1. Wire Map – verify no shorts, opens, miswires, split, reversed or crossed pairs, and end-to- end connectivity is achieved.
2. Cable Length
3. Insertion Loss (attenuation)
4. NEXT Loss
5. PSNEXT Loss
6. ELFEXT Loss
7. PSELFEXT Loss
8. Return Loss
9. ACR
10. PSACR
11. Propagation Delay
12. Delay Skew

Documentation:

Test documentation for Category 6 cabling shall include the following:

1. An introductory discussion documenting each test instrument used, the Autotest routine used on each test instrument, qualifications of operators, test conditions, setup parameters, and any other pertinent information.

2. A summary hardcopy printout for all cables using the tester manufacturer's standard 'Linkware' software to produce an "AutoTest Summary" report. The summary report shall include Project Name, Circuit I.D., Result (pass or fail) and the cable length. The report shall be printed directly out of the 'Linkware' program in native format and in *.PDF format – under no circumstances shall the data be exported to any other type of program at any time.

3. A full-page text only detailed test result for each cable using the tester manufacturer's standard 'Linkware' software to produce an "AutoTest Report". Each report shall be printed directly out of the 'Linkware' program in native format and in *.PDF format
   - under no circumstances shall the data be exported to any other type of program at any time. Each report shall include the following components:

   - Tester manufacturer, model, serial number, hardware version, and software version
   - Project Name
   - Operator Name

- Cable manufacturer, cable part number/type and NVP
- Circuit I.D.
- Autotest specification used (must be standard TIA Category 6 autotest)
- Identification of the tester interface used
- Overall pass/fail indication
- Date of Test
- Wire Map
- Cable Length in feet
- Insertion Loss (attenuation)
- NEXT Loss*
- PSNEXT Loss*
- ELFEXT Loss*
- PSELFEXT Loss*
- Return Loss*
- ACR*
- PSACR*
- Propagation Delay
- Delay Skew

* Measure from both ends of each cable

4. A PASS or FAIL result for each parameter shall be determined by comparing the measured values with the specified test limits for that parameter. The test result for each parameter shall be marked with an asterisk (*) when the result is closer to the test limit than the accuracy of the field tester. The field tester manufacturer shall provide documentation as an aid to interpret results marked with asterisks.

   Each individual test that fails the relevant performance specifications shall be marked as FAIL or FAIL*. Any FAIL or FAIL* result yields a FAIL rating for the link-under-test. In order to achieve an overall PASS rating, the results for each individual test parameter must yield a PASS or PASS* result.

5. Cable identities (Circuit IDs) shall be based on the labeling nomenclature described on the drawings.

6. Transfer of Software to Owner: Provide tester manufacturer's 'Linkware' software, latest version, to the Owner for the Owner's use in viewing and managing test results.

7. Provide all Category 6 cable test documentation in the project O&M Manuals. Category 6 Cable Performance Criteria:

   If the test results for any cables, in the sole judgment of the Engineer, fail to confirm acceptable performance, the Contractor shall reconnectorize or replace with new the affected cables as required to achieve specified performance levels as demonstrated by retesting.

D. Category 6A UTP

Cable

The Structured Cabling System Contractor shall provide a Category 6A tester and shall test all Category 6A cabling for the Permanent Link in strict accordance with TIA standards for Category 6A testing and characterized to 500 MHz. The contractor shall

provide a full test report equivalent in scope to the report required above for Category 6 cabling.

The final test report shall indicate that each Category 6A cable achieved a PASS rating without exception.

If the test results for any cables, in the sole judgment of the Engineer, fail to confirm acceptable performance, the Contractor shall reconnectorize or replace with new the affected cables as required to achieve specified performance levels as demonstrated by retesting.

E. Fiber Optic Cable

Testing: General:

Clean all fiber optic connectors, sleeves and test cords prior to testing. Follow all other recommendations of the test instrument manufacturer for cable and instrument preparation.

Record all test conditions and setup parameters and include in a typed discussion to be provided with test documentation.

On-the-Reel-Testing:

Before commencing the installation and with the cable on the reel, test at least one fiber strand on each cable reel to verify that the cable is undamaged. Record and print test results for future reference.

Post-Installation Testing:

Multimode and Singlemode fiber optic cable end face testing:

Test all fiber end faces using Fluke Networks FI-7000 FiberInspector Pro for automated Pass/Fail certification of fiber optic connector end-faces and graphical indication of problem areas due to contamination, pits, chips, and scratches. The contractor shall save all fiber optic connector end-face views during the certification process for viewing upon request of the Owner until the entire installation is approved by the Owner. All end faces shall Pass certification.

Multimode Fiber Optic Cable Testing:
After installation, termination and labeling of fiber optic cable is complete and approved by the Structured Cabling System Contractor's BICSI Certified Technician, test each strand of fiber to verify that the installed cable meets the performance requirements described below. Test in accordance with the current edition of TIA/EIA-568-B with the additional (and more stringent) requirements following:

Test fiber using the Fluke Networks DSP-4300 Digital Cable Analyzer specified for Category 6 UTP cable in combination with a Fluke Networks DSP-FTA440 Gigabit Multimode Fiber Test Adapters. The DSP-FTA440 Fiber Test Adapter uses a VCSEL source at 850nm and a FP Laser light source at 1310nm for testing multimode fiber running Gigabit Ethernet. Test as follows:

1. Test two fiber links at the two specified wavelengths simultaneously. Perform bi-directional testing on both strands of the fibers-under-test and save results in one record.
2. Measure length for each cable link.
3. Measure attenuation for each cable link.
4. Utilize Fluke Networks 'Linkware' software to store test results and to generate reports.

Test results shall include all test parameters including length and attenuation at each wavelength for each fiber link (terminated strand). Attenuation shall be the worst case result yielded from bi-directional testing. All test results shall be maintained in the native file format of the tester manufacturer's 'Linkware' software. Under no circumstances shall be data be modified by other software, edited in any manner, or exported to a database, spreadsheet, work processor program or any other type of program that would allow access to the data for modification. Detailed test results in Text Format shall be provided to the Owner in native 'Linkware' data format. In addition, detailed test results in Text Format shall be provided to the Owner in Adobe Acrobat *.PDF format. Test results shall be included in the project Operation and Maintenance (O&M) manuals.

Insert all fiber optic cable test documentation in the project O&M manuals.

Fiber Optic Cable Performance Requirements:

Each link of the installed fiber optic cabling, with mated connectors at each end, shall have a total attenuation (in db) less than or equal to the manufacturers' performance specifications for the cable and connectors called for in the contract documents, with the cable attenuation adjusted for the installed length, and with an allowable deviation of +1.0 db. If the test results for a given strand or strands, in the sole judgment of the Engineer, indicate excessive attenuation based on these requirements, the Contractor shall repolish, reconnectorize, or replace the affected cables as required to achieve the specified performance levels as demonstrated by retesting.

The Contractor should note that these specifications are more stringent than the TIA/EIA-568-B criteria for either horizontal or backbone fiber lengths in terms of allowable link attenuation and plan the installation accordingly.

Singlemode Fiber Optic Cable Testing:

Singlemode fiber optic cable testing shall follow the same general requirements as described for multimode fiber but shall be tested using two methods. Test in accordance with the current edition of TIA-526-7-A with the additional (and more stringent) requirements following:

Test using a Fluke Networks DSP-4300 Digital Cable Analyzer in combination with a Fluke Networks DSP-FTA430 Singlemode Fiber Test Adapter. Secondly test using an OTDR in strict accordance with associated TIA standards. Graphical test results shall be provided showing the entire OTDR trace to include the launch cord and terminations at each end shall be provided. Each strand of the installed fiber optic cabling, with mated connectors at each end, shall have a total attenuation (in db) less than or equal to the manufacturers' performance specifications for the cable and connectors called for in the contract documents,

with the cable attenuation adjusted for the installed length, and with an allowable deviation of +1.0 db. If the test results for a given strand or strands, in the sole judgment of the Engineer, indicate excessive attenuation based on these requirements, the Contractor shall repolish, reconnectorize, or replace the affected cables as required to achieve the specified performance levels as demonstrated by retesting.

3.3 Patch Cord Installation:

Prior to Equipment Verification, the contractor shall install patch cords in a neat and workmanlike manner using the wire management devices indicated on the drawings. The contractor shall work side by side with the Owner's IT Staff throughout the entire patch cord installation for purposes of coordination and training.

Prior to installation of patch cords, the contractor shall account for all patch cords in the presence of the Owner's Project Manager and the Owner's IT Staff and shall present to the Project Manager a typed inventory of the patch cords broken down by type and length as scheduled on the drawings. The Owner's Project Manager will verify patch cord types, quantities, and lengths and will sign the inventory indicating that the contractor has delivered patch cords to the job site in accordance with the requirements of the contract documents. The contractor shall provide a copy of the inventory, signed by the Owner's Project Manager, in the O&M Manuals.

The signature of the Owner's Project Manager does not indicate acceptance of ownership of the patch cords by the Owner. Ownership of patch cords shall be transferred to the Owner at the same time as the project as a whole.

Following verification of patch cords types, quantities and lengths by the Owner's Project Manager, the contractor shall complete the patch cord installations as follows:

A. Data and VOIP Copper Patch Cords – CER and CC:

Install data patch cords connecting each port of all data equipment from data equipment connections to horizontal patch panels. Horizontal wiring connections to be made active shall be as directed by the Owner's Project Manager and the Owner's IT Staff in the field.

Provide a typed cross-reference list in Microsoft Excel spreadsheet format identifying data equipment ports and corresponding horizontal wiring connections – place hardcopy and CD of spreadsheet in three ring binder and mount binder on the backboard adjacent to the racks. Provide additional hardcopy and CD in O&M Manuals. Email copy of Excel Spreadsheet to the Engineer and the Owner's Project Manager.

Patch cords shall be neatly routed and bundled with black velcro at 6 inches on center in wire management devices from connection to connection. Patch cord lengths shall be selected by the Contractor from the stock supplied under the project to provide a neat installation in the racks and wire management systems without excess length. Note - Bundle data patch cords together – do not mix data patch cord bundles with voice patch cord bundles or fiber optic patch cord bundles. The entire installation shall require the site approval of the Engineer.

B. Fiber Patch Cords – CER and CC:

Install fiber optic patch cords to connect all data equipment fiber optic ports as directed by

the Owner's Project Manager and IT Staff in the field. Patch cords shall be neatly routed and bundled with black velcro at 3 inches on center in wire management devices from connection to connection. Patch cord lengths shall be selected by the Contractor from the stock supplied under the project to provide a neat installation in the racks and wire management systems without excess length. Note - bundle fiber optic patch cords together – do not mix fiber optic patch cord bundles with data patch cord bundles or voice patch cord bundles. The entire installation shall require the site approval of the Engineer.

C. Workstation Patch Cords

The Contractor shall, in coordination with the Owner's Project Manager and IT Staff, install workstation data patch cords in the locations designated by the IT Staff as described above for connection of equipment room data patch cords to horizontal wiring connections. In addition, the Contractor shall work side by side with the Telephone System Provider to install telephone line cords as telephone instruments are set.

3.4 EQUIPMENT VERIFICATION

After installation of patch cords and before System Startup, the Contractor shall assist the Owner to power-up all data equipment and verify proper operation. The Contractor shall coordinate with the Owner to verify all cable interfaces are working and operational with the equipment. The contractor shall make any cabling system changes and additions as necessary and/or provide patch cables as required to complete the installation.

3.5 FINAL CLEANUP

Prior to the Substantial Completion Inspection, perform final cleanup of all work and all areas in which work was performed. All work areas shall be left vacuum clean. All raceway, faceplates, jack assemblies, racks, panels, data equipment, and the like shall be thoroughly wiped down to remove small amounts of dust accumulated during the course of the project. Jacks, patch panels, wiring blocks and data and voice equipment shall be cleaned with a high powered vacuum cleaner to completely remove internal dust. All painted surfaces such as backboards shall be touched up with paint to remove scuff marks, pencil marks, scratches, etc. All factory surfaces shall be touched with matching paint obtained by the Contractor from the factory.

3.6 CLOSE-OUT DOCUMENTATION

A. Operation & Maintenance Manuals:

Provide O&M Manuals as required by the architectural specifications and as follows.

The O&M Manuals shall contain sufficient information to permit Owner personnel to operate the system with or without assistance from the Contractor.

The Contractor shall provide O&M Manuals covering all equipment and materials furnished under this contract. The O&M Manuals shall contain all information necessary for the operation, maintenance, parts procurement, and parts replacement for the structured cabling system. The information shall include detailed documentation for firmware configuration.

Quantity: Three (3).

Format: *Provide 8-1/2" x 11" loose-leaf 3-ring binders with clear vinyl overlay designed to receive identification inserts. 3-ring binders shall be heavy- duty D-Ring type, over-sized to allow the insertion of additional system documentation in the future.*

Project Identification: Furnish project identification *inserted under the clear vinyl overlay on the front cover and the back spline as follows:*

Operating & Maintenance Manual
Project Name
Structured Cabling System Contractor

Project Information: On the front page, *enclosed in a 3-ring clear plastic sheet protector*, provide the following information:

Project Name
Structured Cabling System Contractor
Name Structured Cabling System
Manufacturer Name Electrical Contractor
Name
Contractor's Project Manager
Contact list with name, address, contact person, and phone number for each of the following:

Structured Cabling System
Contractor Structured Cabling
System Manufacturer Electrical
Contractor

Index: On the second page, *enclosed in a 3-ring clear plastic sheet protector*, provide an index indicating the following section numbers and titles.

Sections: All sections shall be separated with an appropriate tabbed section divider with the appropriate number and title (typed) as follows:

Section 1 – Cuts Sheets:

Manufacturer's original data/cut sheets for each system component. Section 2 – Data Equipment List:
Typed list of each item of data equipment (including Owner furnished data equipment) with brief description, serial number, and part number. Note where each item of equipment is installed (CER/CC number, rack number and mounting position in rack). *Enclose in a 3-ring clear plastic sheet protector.*

Section 3 – Factory Manuals:

Manufacturer's printed Installation and Operating Manuals for each item of equipment provided by the Contractor. *Provide 3- ring zip-lock pockets for each manual that is not factory 3-ring hole punched*. Do not include manuals loose

or inserted in binder pockets.

Section 4 - Warranties:

- Copy of Structured Cabling System Contractor's and 3 year warranty. *Enclose in a 3-ring clear plastic sheet protector.*
- Copy of Manufacturer's printed warranty for each item of equipment. *Enclose in a 3-ring clear plastic sheet protector.*

Section 5 - Transmittal of Loose Items:

Copy of transmittal to the Owner of all loose items such as patch cords, spare surge protectors, spare parts, etc. signed-off by the Owner. *Enclose in a 3-ring clear plastic sheet protector.*

Section 6 - Documentation of Training:

Documentation of training signed-off by the Owner's Project Manager. *Enclose in a 3-ring clear plastic sheet protector.*

Section 7 - Cable Test Results:

Part 1 – RCDD Certification:

Provide written Certification of Contractor's RCDD, stating that all fiber optic, Category 6 and Category 6A cables have been tested in compliance with the contract documents and have met or exceeded the requirements stated therein. *Enclose in a 3- ring clear plastic sheet protector.*

Part 2 – Executive Summary:

Provide Hardcopy Summary Report of test results in the following divisions:

- Category 6 and Category 6A Cabling – Generate report directly from Fluke Networks 'Linkware' software.
- Fiber optic backbone cabling – Generate report directly from Fluke Networks 'Linkware' software.

Enclose each report in a 3-ring clear plastic sheet protector.

Part 3 – Fiber Optic Cables:

Provide detailed printed test results for all fiber optic cables. *Test results shall be printed on a laser printer. Enclose*

hardcopy in a 3-ring clear plastic sheet protector.

Part 4 – Category 6 and Category 6A Cables:

Provide CD with Category 6 and Category 6A cable text only test results in native Fluke Networks 'Linkware' software *.FCM format and in Adobe Acrobat *.PDF format*. Place CD in 3-ring clear plastic CD jacket.*

Part 5 – Fiber Optic Backbone Cables:

Provide CD with fiber optic backbone cable test results in native Fluke Networks 'Linkware' software *.FCM format and in Adobe Acrobat *.PDF format*. Place CD in 3-ring clear plastic CD jacket.*

Section 8 - Patch Cord Spreadsheet (voice and data):

Provide Hardcopy and CD of Excel Spreadsheet file. *Enclose hardcopy in a 3-ring clear plastic sheet protector. Place CD in 3-ring clear plastic CD jacket.*

Section 9 – Annotated Adobe Acrobat *.PDF As-Built Drawings.

Provide 11"x17" hardcopy laser prints and CD of *.PDF files. *Enclose hardcopy in a 3-ring clear plastic sheet protector. Place CD in 3-ring clear plastic CD jacket.*

B. As-Built AutoCAD Drawings:

Provide the same AutoCAD drawings as required under paragraph "Pre-Installation AutoCAD Drawings". Modify and correct to accurately reflect the finished installation. Provide five (5) hard-copies and two (2) sets of electronic media.

Submit As-Built AutoCAD Drawings to the Engineer at the Substantial Completion Inspection. Provide transmittal letter addressed to the Engineer indicating that the Contractor is providing five (5) hard-copies and two (2) sets of electronic media of the As-Built AutoCAD Drawings.

C. Red-Line Record Documents:

Refer to paragraph "CONTRACTOR'S RECORD DOCUMENTS". Provide Record Documents, updated in red pen, to accurately reflect the finished installation.

Submit Red-Line Record Documents over to the Engineer at the Substantial Completion Inspection. Provide transmittal letter addressed to the Engineer indicating that the Contractor is providing one (1) set of Red-Line Record Documents.

D. Annotated Adobe *.PDF A-Built Drawings:

The Engineer will provide a full set of Adobe Acrobat *.PDF format As-Built Drawings to

the Contractor. The Contractor shall be required to annotate (redline) the *.PDF format drawings using Adobe Acrobat to reflect all changes recorded in the field as required by the paragraph "CONTRACTOR'S RECORD DOCUMENTS". The Contractor shall provide a copy of the
*.PDF files on CD with each set of O&M Manuals and shall provide an additional copy on CD to the Engineer. The Contractor shall also provide 11”x17” hardcopy laser prints of *.PDF drawings in each O&M Manual.

3.10 SUBSTANTIAL COMPLETION

Complete Final Checkout of system operation, Final Checklist, Cable Test Results, O&M Manuals and Record Documents prior to Substantial Completion. The Contractor's project manager and project senior technician shall be present for the Substantial Completion Inspection.

3.11 OWNER PERSONNEL TRAINING

Owner personnel training shall be provided for the Structured Cabling System. The cost of training shall be included in the cost of the system. Two copies of all manuals and training material shall be supplied to the Owner’s Project Manager at no additional cost.

The Owner’s Project Manager shall be notified prior to each training session and may participate in the training at his or her discretion.

All instruction shall be presented in an organized and professional manner by personnel who are thoroughly familiar with the installation and who certified by the manufacturer of the specific system and/or equipment for which they are providing training.

The Structured Cabling System Contractor shall provide documentation of all training (including names of personnel present at each training session) to the Engineer at the Final Completion Inspection. The documentation shall be signed-off by the Owner. The documentation shall be three-hole punched and ready for insertion in the O&M manuals.

A. Structured Cabling System Training:

Subsequent to Substantial Completion but prior to Final Completion, the Contractor shall provide on-site training to Owner personnel on the operational use of the Structured Cabling System and all related equipment.

The Structured Cabling System Contractor shall schedule a time to provide not less than one (1) hour of formal training to Owner personnel on the Structured Cabling System. The Structured Cabling System Contractor shall provide an additional two (2) hours of follow-up training on the system when requested by the Owner at any time during the warranty period.

Structured Cabling System training shall include a "walk-through" of the systems to identify and locate closets, panels, and important system components, a discussion of overall system concepts and configuration, specific instruction in labeling and patch cord move/changes, a review of the as-built drawings, a review of the system verification and acceptance documentation, and guidelines for basic trouble-shooting and operation of the Structured Cabling System and all related equipment.

3.12 FINAL COMPLETION

Following completion of punch list items generated by the Engineer following the Substantial Completion Inspection, the Contractor shall notify the Engineer in writing, stating that all punch list items have been completed.

3.13 WARRANTY

The Structured Cabling System Contractor warrants all work performed by him directly and all work performed for him by others for a period of three years. Any work, material or equipment which during the warranty period is, in the opinion of the Engineer or the Owner's Project Manager, defective or inferior and not in accordance with the contract documents, shall be made good at no additional cost to the Owner, including any other work which may have been damaged because of such deficiencies. The Contractor shall be the contact person and the person responsible for coordinating all warranty work for the Owner.

When equipment cannot be repaired at the site, the Contractor shall be completely and solely responsible for the coordination and completion of equipment repairs, including pickup at the project site, transportation and shipping costs to and from the repair site, and reinstallation and reintegration into the system. Equal or better loaner equipment shall be provided and installed by the Contractor any time equipment cannot be repaired at the site, so that the system is maintained in continuous working order as before the equipment failed.

A. Special Warranty – Structured Cabling System:

The Structured Cabling System Contractor shall be fully able to provide the following warranty if requested by the Owner.

All materials, equipment and workmanship incorporated in the work shall be guaranteed by the Structured Cabling System Contractor and the Structured Cabling System Manufacturer for a period of 25 years from the date of Final Completion of the project and Final Acceptance by the Owner. See paragraph 1.4.A Special Warranty - Structured Cabling System for detailed requirements. The Structured Cabling System Contractor shall provide all necessary documentation required by the Structured Cabling System Manufacturer to properly register the system with the manufacturer for warranty purposes. The Structured Cabling System Manufacturer shall issue certificates of warranty signed by a permanent employee of the Structured Cabling System Manufacturer who is authorized by the senior officers of the company to certify the fiber optic, Category 6 and Category 6A cabling systems. Original certificates of warranty shall be provided to the Owner, with copies to the Engineer.

END OF SECTION 27 00 00

THIS PAGE LEFT INTENTIONALLY BLANK

SECTION 28 10 00 – ELECTRONIC ACCESS CONTROL SYSTEM

PART 1 - GENERAL

1.1 SCOPE

A. This specification delineates the requirements for a complete Electronic Access Control with integrated Intrusion Alarm System as specified herein and as indicated on the drawings.

B. The scope is to provide a complete and warranted system ready for full operation in accordance with the contract documents and additional direction provided by the Owner to the Access Control System Contractor. The installation shall include all accessories and appurtenances required to provide a complete and fully operational system. Any materials not specifically mentioned in these specifications or not shown on the drawings but required for a complete and finished installation shall be furnished and installed at no additional cost to the Owner.

C. Refer to the access control and intrusion alarm system drawings, electrical drawings, architectural drawings and door hardware specifications for additional information regarding the scope of related work for the General Contractor and each subcontractor. Coordinate all work closely with the Owner's Project Manager, General Contractor, Electrical Contractor, Structured Cabling System Contractor, and door hardware provider.

1.2 ACCESS CONTROL SYSTEM CONTRACTOR ALLOWANCE

A. The Construction Manager/General Contractor shall include a complete Access Control System with Intrusion Alarm for this project provided by a specialized Access Control System Contractor with related work provided by the SCSC and the Electrical Contractor. The Access Control System Contractor shall be a direct subcontractor to the General Contractor. See drawings for additional information.

B. The Owner is standardized on Vanderbilt SMS Enterprise Software for a multi-site web-based access control system management, monitoring and control system beginning with this project.

C. The Access Control System Contractor shall be Vanderbilt SMS certified beginning not less than one year prior to bids, shall be well experienced in the integration of an Access Control System of the type and size required for this project into Vanderbilt SMS and shall meet all additional qualifications stated in the specifications and drawings. Provide letter from Vanderbilt attesting to current certification as part of the bid proposal.

D. **The Access Control System Contractor must be certified and qualified and must be on the list of subcontractors at the time of Bid submittal.**

E. The scope of work shall include the Access Control System with intrusion alarm complete with all work indicated on the drawings and described in the specifications, all work described in the Access Control System Contractor's cost proposal and associated statement of work, all other materials, equipment and work required for a complete system, all wiring and cabling (except as indicated below for category 6 network cabling by the SCSC), and all programming and setup required to make the system fully operational and functional to the satisfaction of the Owner.

F. The Access Control System Contractor shall provide all wiring for each sub-system, except that Category 6 cabling to the Access Control System for emergency notification and Category 6 cabling to Access Control System Panels for Ethernet Network interfaces shall be provided by the Structured Cabling System Contractor under Division 27.

G. Related work to be provided by others but not included in the scope of work for the Access Control System Contractor shall include conduit for all Access Control System wiring and cabling and all power and grounding required for the Access Control System. The Electrical Contractor shall be responsible for coordinating the associated conduit, power and grounding work with the Access Control System Contractor - but the scope of conduit, power and grounding work shall not be less than that described on the drawings.

H. The Access Control System Contractor shall include but not be limited to the following sub-systems and all related work:

Access Control System.
Intrusion Alarm System for exterior doors (using door position switches and request to exit factory provided in electrified locksets and exit devices) and integrated into the access control system.

Remote Notification Interfaces.

All other work indicated on the drawings and all other work required for a complete Access Control and Intrusion Alarm System.

I. The Access Control System Contractor shall be responsible for providing a final detailed design for each sub-system incorporating the systems indicated schematically on the drawings with all additional components and features required for complete systems based on Owner standards and specific direction for this project.

J. The Access Control System Contractor project manager shall periodically visit the site and inspect the work in progress. Project manager site visits shall be made not less than once per week when the job is in active progress. The project manager shall prepare a field report for each site visit for submission to the Owner. The project manager shall sign off on all system test results.

1.3 EQUIPMENT PROVIDER

The contractor shall procure all Access Control System equipment from a factory authorized reseller in the geographical area of the project for continued support.

1.4 RELATED REQUIREMENTS

Drawings and general provisions of Contract, including General and Supplementary Conditions and Division 1 Specification Sections, apply to this section.

Electrical Specification Sections regarding conduit apply to work under this section, with the additions and modifications specified herein and on the drawings. The special requirements indicated on the drawings and in this specification section for Access Control System conduit shall take precedence over any requirements specified in Electrical Specification Sections.

All conduit and related work shall be provided by the project electrical contractor using tradesmen who are skilled and experienced in the types of conduit installations indicated in the bid documents. See drawings for conduit requirements.

Refer to Division 27 Communications Structured Cabling System for related work by the Communications Structured Cabling System Contractor who shall provide a Category 6 connection to the Access Control System for emergency notification and a Category 6 Ethernet network connection (two Category 6 cables) to each Access Control System panel.

1.5 EXAMINATION OF SITES AND TOTAL SYSTEM RESPONSIBILITY

Prior to providing a proposal for this work, each bidder shall examine the drawings, specifications, and other contract documents to inform himself/herself thoroughly regarding any and all conditions and requirements that may in any manner affect the work to be performed under the contract.

Any additional equipment and accessories required for the installation and operation of the complete operating system not specifically required by the bid documents shall be provided and the cost borne by the contractor.

The contractor remains the owner of all equipment provided under this contract and is responsible for all risk of loss or damage to the equipment from any source up to and including the date and time of final acceptance by the Owner. Upon the date of commencement of the warranty period, the Owner shall assume full ownership of the equipment.

1.6 QUALITY ASSURANCE

Materials shall be new and shall be the best of their respective kinds. All work shall be accomplished in a workmanlike manner in keeping with the best practices and highest standards of the Electronic Access Control & Panic Alarm System industry.

Protect materials and equipment from physical or environmental damage during shipping, storage and installation. Equipment and materials shall be received at the site in new condition and shall be maintained in new condition throughout the installation process. Damaged or deteriorated equipment and materials will not be acceptable. The Contractor shall be responsible for the safety and condition of all materials and equipment, whether stored or installed, until final acceptance by the Engineer and the Owner.

1.7 CODES AND STANDARDS

All work done under this contract shall be performed in accordance with the most recent issue of the following codes and standards. Where there is a perceived conflict between a standard and the contract documents, the Contractor shall perform the work as directed by the Engineer. Where no specific method or form of construction is called for in the Contract Documents, the Contractor shall comply with code requirements when carrying out such work.

A. Codes:

a. Florida Building Code
b. National Electrical Code (NFPA 70)

c. Life Safety Code (NFPA 101)
d. Florida Fire Prevention Code 8th Edition
e. National Electrical Safety Code (NESC)

B. Standards: All electrical materials, installation and systems shall meet the requirements of the following standards, including the latest addenda and amendments:

a. American National Standard Institutes (ANSI)
b. Institute of Electrical and Electronics Engineers (IEEE).
c. National Electrical Manufacturer's Associations (NEMA).
d. National Fire Protection Association (NFPA).
e. Occupational Safety and Health Act (OSHA).
f. Underwriter's Laboratories, Inc. (UL).
g. Electronic Industry Association (EIA).
h. Telecommunication Industry Association (TIA).
i. American Society of Industrial Security (ASIS)

1.8 SUBMITTALS

A. Submit three copies of the manufacturer's catalog data and pre-installation drawings to the Engineer for approval prior to commencing work or ordering materials. Receive approval of the Engineer in writing for each item of submittals prior to commencing work.

B. Manufacturer's Catalog Data: Submit the producer's standard descriptive data sheets for each type of product being provided. Provide products in accordance with the drawings. Provide complete data sheets bearing the printed logo or trademark of the manufacturer. Mark each copy of the data sheets for the specific product being provided with an identifying mark, arrow, or highlighting. Submittals without such identifying marks shall be rejected without comment for resubmittal.

Submit the following items and all other items required for a complete system:

a. Cabling, each type
b. Cabling connectors
c. Card Reader, each type, with all accessories including enclosures
d. All card reader factory mounting plates and other accessories
e. Access Control System panels
f. Access Control System power supplies
g. Fire-stopping, each type (each UL listed Assembly)
h. All other materials and equipment indicated on the drawings to be furnished under this section, whether specifically listed here or not.
i. All other materials and equipment required for complete and fully functional system in accordance with direction from the Owner, whether indicated elsewhere or not.
j. All other information indicated on the contract drawings, and all additional information required by the Engineer.

1.9 CONTRACTOR'S RECORD DOCUMENTS

The Access Control System Contractor shall maintain a full set of contract documents at the job site at all times, consisting of specifications, drawings, addenda, pre-installation submittals, change orders, and engineering directives. The record documents shall be updated by the Contractor, in red pen and on a daily basis, to show the following:

a. Final location of all Card Readers.
b. Final locations of all access control system panels and power supplies.
c. Final location of all other system components.
d. Any changes to the work authorized by the Architect/Engineer.
e. Any other pertinent information that may be of value to the Owner in operating and maintaining the system.

The Contractor's record documents shall be available for viewing by the Engineer or the Owner at the site at any time and shall be presented and reviewed by the Contractor at each construction progress meeting. The record documents shall be clearly marked "Record Set", shall be kept in a protected location, and shall not be used for general construction purposes. The record documents shall be provided to the Engineer at the close of the project.

The Engineer will provide a full set of Adobe Acrobat *.PDF format drawings to the Contractor. The Contractor shall be required to annotate (redline) the Adobe Acrobat *.PDF format drawings using Adobe Acrobat to reflect all information recorded in the field. The Contractor shall provide a copy of the Adobe Acrobat *.PDF files on CD with each set of O&M Manuals and shall provide an additional copy on CD to the Engineer. The Contractor shall also provide 11”x17” laser prints of Adobe Acrobat *.PDF drawings in each O&M Manual. Electronic files of the Engineer’s AutoCAD floor plan drawings will be provided to the Contractor upon request.

PART 2 - PRODUCTS

2.1 GENERAL

All materials, equipment, and devices shall be new and unused, of current manufacture and of the highest grade, free from defects.

All products shall be the manufacturer and model or part number specified. Bid shall be for new equipment only. Newly manufactured (containing used or rebuilt parts), remanufactured, rebuilt, reconditioned, newly remanufactured, used, shopworn, demonstrator or prototype equipment is not acceptable and will be rejected. If required by the Engineer, the Contractor shall provide a written certification from the manufacturer referencing the serial number each item of equipment and stating that the equipment is new.

All materials, equipment and devices shall, as a minimum, meet the requirements of UL where UL standards are established for those items, and the requirements of NFPA 70.

All like items of material or equipment shall be the same product of the same manufacturer.

All materials and equipment shall be a standard catalogued product of a manufacturer regularly engaged in the manufacture of similar products.

Where a model or part number is indicated in error for any reason, the Contractor shall verify the intent of the Engineer prior to providing a bid proposal and shall provide the product intended by the Engineer. Where a manufacturer has updated or improved a product subsequent to issuance of the bid documents by the Engineer, the Contractor shall provide the updated or improved product at no additional cost to the Owner.

2.2 PRODUCT SPECIFICATIONS

To ensure a uniform basis for bidding, and to standardize the Owner's facilities, base all bids on the particular systems, equipment and materials specified.

See drawings for all product requirements not indicated in these specifications. The Structured Cabling Contractor shall be responsible for providing and installing all components indicated in these specifications and on the drawings, unless specifically indicated to be provided by others.

PART 3 - EXECUTION

3.1 GENERAL

The installation shall be in strict accordance with all applicable codes and standards, the respective manufacturer's written recommendations, and the contract drawings and these specifications.

All materials, equipment, and devices shall be new and unused, of current manufacture and of the highest grade, free from defects. Workmanship shall be of the highest grade in accordance with modern practice.

The installed system shall be neat, clean, and well organized in appearance. Provide working clearances for normal system operation, reconfiguration and repair.

The Access Control System Contractor shall test each cable as required by NEC and all requirements of the cable manufacturer and the manufacturer of connected equipment for operational and warranty compliance. Document results of testing and submit to Engineer for review and approval. The test log shall include the system component identifier, the test date, the initials of the technician who tested the cable, and the test results.

All equipment mounting heights and locations shall be in accordance with the Americans with Disabilities Act (ADA). Coordinate with the Architect.

All wiring shall be terminated on terminal blocks – each wire shall be terminated using crimp on ring style lug connectors. Wire nuts or B-style crimp on connectors are not acceptable.

Run a single jacketed cable containing all necessary individually insulated cables to operate the access control system with all related functions at each secure door. The cable shall be continuous with no splices from the serving Access Control System Panel to the point of connection at the secure door served.

3.1.1 Conduit Installation:

See drawings for conduit requirements.

3.1.2 Cabling Installation:

Access Control System cabling shall be run continuously in conduit without exception.

Do not pull cables in conduits until plastic insulating bushings have been installed. Cables installed in conduits without plastic insulating bushings shall be removed and replaced with new cables. Rack conduits and run together wherever possible.

The Contractor, in providing a bid for the system in accordance with the contract documents, agrees to install all cabling in the conduit and wireway paths indicated in the contract documents, or to provide larger conduit and wireway paths as he deems necessary, at no additional cost to the Owner. The Contractor shall be fully responsible for any and all damage to cabling that may occur during the installation and shall replace any damaged cabling with new cabling of the type specified for the application.

Firestop all conduit penetrations of all walls that extend to the underside of the roof deck above. Firestop all conduit penetrations of all walls that do not extend to the underside of the roof deck above but are indicated as fire rated on the drawings. Accomplish firestopping using UL classified systems with fire rating equal to or greater than the fire rating of the floor or wall assembly penetrated. Firestop systems shall be 3M, Nelson or Engineer approved equal. Install in strict accordance with the manufacturer's printed instructions and the conditions of the UL approval for each firestop system used.

All cable penetrations of walls that do not extend to the underside of the roof deck above shall be sealed smoketight and acoustically with smoke-sound caulking UL listed for the purpose such as USG Firecode, STI Smoke 'N' Sound, or Hilti CP.

3.2 CARD READER LOCATIONS

Card Reader locations indicated on the drawings are approximate – see "Card Reader Location Note" on the drawings.

The General Contractor shall schedule meetings at the site prior to commencement of any installation activities by the Access Control System Contractor and the system rough-in provider and additionally as construction proceeds to coordinate the exact location of each card reader prior to installation. The meetings shall include the General Contractor, the Owner's Project Manager, the Access Control System Contractor, and the Electrical Contractor. Final card reader locations may be placed up to 10 feet away from locations shown without additional cost to the Owner. Particular attention shall be given to coordination of card reader locations relative to clear visibility, easy user access, and open direct path to controlled door after unlock.

The Access Control System Contractor shall install the card readers in accordance with the manufacturer's printed installation instructions and the mounting requirements indicated on the drawings, except that final reader locations shall be determined as indicated above. All card readers shall be flush mounted.

After final card reader locations are determined and the readers are mounted and wired the Access Control System Contractor shall test the operation of each reader with the Owner's Project Manager and security personnel.

3.3 SYSTEM SETUP AND PROGRAMMING

All required headend equipment installation, setup and programming shall be provided by the Access Control System Contractor in accordance with established Owner standards or as directed by the Owner.

The Access Control System Contractor shall also complete all work related required for the full application of the Access control System to the Access Control Systems for this project as directed by and to the satisfaction of the Owner's Project Manager and security personnel.

In general use all setup features provided by the manufacturer to provide the best system operation under all conditions of use. Describe to the Owner all available features of the system and provide setup as directed by the Owner and for the best overall operation and performance of the system as a whole for the intended purpose.

Assign each secure door a schedule and assign door types. Setup time schedules and operating modes for each unique secure door type. Coordinate operating modes for each secure door type at different times of the day, week and year in detail with the Owner. Coordinate regularly scheduled events as well special events. Setup and program system accordingly for access to the facility by use of card readers using Owner issued employee proximity cards. Assign credentials provided by the Owner and provide all related information entry into software if so directed by the Owner.

Setup system user interface stations selected by the Owner for through the facility LAN and Web. Setup user/host authentication, user access and user priorities.

Setup Intrusion Alarm System for arm/disarm as indicated on the drawings and for alarm notification as directed by Owner to include all methods and recipients of local and remote notification as directed by the Owner.

Coordinate all network interfaces with the Owner's IT and security personnel. Contact the Owner's project manager to schedule meetings with required personnel.

3.4 SYSTEM VERIFICATION AND OWNER'S ACCEPTANCE TEST

Proof of performance of the Access Control System to include a full system operational test shall be conducted in the presence of the Owner's Project Manager and Owner personnel. As part of proof of performance demonstrate system operation to Owner's personnel.

The Contractor shall conduct a final inspection and pretest all equipment and system features required for project. Contractor shall correct any deficiencies discovered as the result of the inspection and pre-test.

The Contractor shall submit a request for Owner Acceptance Test in writing to the Owner's Project Manager, no less than fourteen days prior to the requested test date. The request for Acceptance Test shall be accompanied by a certification from Contractor that all work is complete and has been pre-tested, and that all corrections have been made.

During Acceptance Test, Contractor shall demonstrate all equipment and system features to the Owner. The Contractor shall remove covers, open wiring connections, operate equipment, and perform other reasonable work as requested.

Any portions of the work found to be deficient or not in compliance with the Drawings and Specifications will be rejected. The Contractor shall promptly correct all deficiencies and submit a request in writing to Owner's Project Manager for a follow-up Acceptance Test.

3.5 CHECKOUT

Subsequent to testing and verification and prior to the first day of normal operation following start-up, the contractor shall be responsible for checking out the system to verify that it is operating properly and performing in compliance with the equipment manufacturer's specifications and the specifications. The checkout shall include a System Inspection Checklist to fully document checkout.

3.6 SUBSTANTIAL COMPLETION

The Access Control System Contractor shall complete the installation of the Access Control System prior to the scheduled date for Substantial Completion to allow sufficient time for Owner Training and final system setup such that the Access Control System shall be fully operational and ready for use on the date of Substantial Completion.

3.7 FINAL COMPLETION

Following completion of the Substantial Completion punch list items and the initial performance period, the contractor shall notify the Engineer. The Engineer will conduct a final completion inspection. Upon determining that all punch list items have been satisfactorily completed, the Engineer will declare the project finally complete. For the purposes of this contract the terms Final Completion, Final Acceptance, and Final System Acceptance are synonymous.

3.8 DOCUMENTATION

A. Red-Line Record Documents:

Refer to paragraph "CONTRACTOR'S RECORD DOCUMENTS". Provide Record Documents, updated in red pen, to accurately reflect the finished installation.

Submit Red-Line Record Documents over to the Engineer at the Substantial Completion Inspection. Provide transmittal letter addressed to the Engineer indicating that the Contractor is providing one (1) set of Red-Line Record Documents.

B. Annotated Adobe *.PDF A-Built Drawings:

The Engineer will provide a full set of Adobe Acrobat *.PDF format As-Built Drawings to the Contractor. The Contractor shall be required to annotate (redline) the *.PDF format drawings using Adobe Acrobat to reflect all changes recorded in the field as required by the paragraph "CONTRACTOR'S RECORD DOCUMENTS". The Contractor shall provide a copy of the *.PDF files on CD with each set of O&M Manuals and shall provide an additional copy on CD to the Engineer. The Contractor shall also provide 11”x17” hardcopy laser prints of *.PDF drawings in each O&M Manual.

C. O & M Manuals:
The contractor shall provide operating and maintenance manuals covering all equipment and materials furnished under this contract. The O & M manuals shall contain all information necessary for the operation, maintenance, replacement, installation, and parts procurement for the System. The information shall include detailed documentation equipment configuration. A complete recommended spare parts inventory list shall be included with the lead time and expected frequency of use for each part clearly identified.

A quantity of three (3) 8-1/2" x 11" loose leaf 3-ring binders with clear vinyl overlay designed to receive identification inserts shall be provided. The manuals shall contain the following sections:

a. Cut sheets for all equipment.
b. Detailed wiring diagrams and panel drawings
b. Installation instructions.
c. Operating and maintenance instructions.
d. Recommended spare parts inventory list.
e. User's Guides and technical reference guides.
f. Copy of one year warranty.

Provide a list with name, address, contact person, and phone number for two separate contacts with name and telephone number for warranty service and the manufacturer of each item of equipment with telephone number and sources of supply for parts.

3.9 USER TRAINING

Subsequent to Substantial Completion but prior to Final Completion, the Contractor shall provide on-site training to Owner personnel on the operational use of the Electronic Access Control & Panic Alarm System and the all related equipment.

The Access Control System Contractor shall schedule a time to provide not less than eight (8) hours of formal training to Owner personnel on the Access Control System, divided into two four (4) hour sessions, one prior to building occupancy and the second following building occupancy at a time directed by the Owner. See drawings.

Access Control System training shall include a "walk-through" of the systems to identify and locate closets, panels, and important system components, a discussion of overall system concepts and configuration, specific instruction in labeling, a review of the as-built drawings, a review of the system verification and acceptance documentation, guidelines for basic trouble-shooting and detailed instructions in the operation of all aspects of the Electronic Access Control & Lockdown/Panic Alarm System and all related equipment.

3.10 WARRANTY

All equipment including material used in the installation thereof shall be warranted for one year by the Access Control System Contractor against mechanical, electrical, and workmanship defects. In the event defects become evident within the warranty period, the Contractor shall repair or replace the defective parts and materials at no additional cost to the Owner. The warranty period shall start with the date of final acceptance. The warranty shall apply to all equipment provided under the provisions of this contract regardless of the location. Warranties submitted with bids, either appearing separately or included in pre-printed literature and price lists, shall not be acceptable and provisions herein take precedence.

END OF SECTION 281000

SECTION 28 46 21.11 – ADDRESSABLE FIRE ALARM SYSTEMS

PART 1 - GENERAL

1.1 Drawings and general provisions of Contract, including General and Supplementary Conditions and Division-1 Specification Sections, apply to work of this Section.

1.2 Division-26 Electrical Sections apply to work of this Section.

A. The fire alarm system shall be installed by a state certified fire alarm system installation Contractor.

B. It is the intent of this specification to provide an individual complete and operational low voltage, time-division multiplexed, addressable intelligent fire alarm system as described herein. The system shall include, but not be limited to: control panels and power supplies, standby power supply and battery, alarm initiating and indicating appliances and devices, monitor and supervision devices, system wiring, and accessories required to provide and install a complete and software operational system. All equipment and installation shall comply with the requirements of these specifications and the related Drawings. Items specified by either shall be as if specified by both. The individual system specified herein shall be networked as described herein.

C. The equipment and installation shall comply with the current provisions of the following standards:

National Fire Protection Association Standards:
NFPA 70 National Electric Code
NFPA 72 National Fire Alarm Code
NFPA 101 Life Safety Code
Underwriters Laboratories Inc.

Underwriters Laboratories Inc. for use in fire protective signaling systems shall list the system and all components. The UL Label shall be considered as evidence of compliance with this requirement. The equipment shall be listed by UL under the following standards as applicable:

UL 864/UOJZ, APOU	Control Units for Fire Protective Signaling Systems.
UL 1076/APOU	Proprietary Burglar Alarm Units and Systems.
UL 268	Smoke Detectors for Fire Protective Signaling Systems.
UL 268A	Smoke Detectors for Duct Applications.
UL 521	Heat Detectors for Fire Protective Signaling Systems.
UL 228	Door Holders for Fire Protective Signaling Systems.
UL 464	Audible Signaling Appliances.
UL 1638	Visual Signaling Appliances.
UL 38	Manually Activated Signaling Boxes.
UL 1971	Visual Signaling Appliances.
UL 1481	Power Supplies for Fire Protective Signaling Systems.
UL 1711	Amplifiers for Fire Protective Signaling Systems.

Any equipment not bearing a UL Label shall be removed and replaced with labeled equipment at the Contractors' expense.

Americans with Disabilities Act (ADA)

In the case of any discrepancy between these specifications, the project drawings, and any applicable local codes, the installed Fire Alarm System shall comply with the most stringent requirement.

D. The system and all components shall be listed by Underwriter's Laboratories for specific application

as fire alarm equipment. The UL label shall be prima facie evidence of compliance with this requirement. Any equipment not bearing a UL label will be unacceptable and will be removed and replaced with labeled equipment at the Contractor's expense.

1.3 SUBMITTALS:

A. Submit the producer's standard descriptive data sheets for each type of product being provided. Mark the data sheet for the product being provided with an identifying mark or arrow. Complete data sheets bearing the printed logo or trademark of the fire alarm control panel manufacturer for the following equipment:

1. System Control Panel.
2. System Power Supply.
3. Standby Power Supply.
4. Each type of automatic smoke detector and fire detector.
5. Manual alarm initiating station.
6. Audible/Visual alarm indicating appliances.
7. Voice Evacuation Equipment
8. Any other items required by the Project Drawings or Specifications.

B. Evidence of listing of all proposed equipment by UL for application as fire alarm equipment.

C. Submit a scaled "point-to-point" wiring diagram showing the connections to the equipment and terminal cabinets. Indicate the equipment numbers, terminal numbers, wire numbers, zone numbers, wire colors, junction box sizes, and conduit sizes. Include the connections for the Mechanical Systems and the Fire Detection and Alarm System. The submittal shall be made for approval prior to the installation of the wiring in the raceways. Make a clear statement that all circuits shall be terminated on terminal strips and that wire nuts will not be allowed. Electronic floor plans are available from the Architect.

D. A custom wiring diagram for the building showing wiring to each individual appliance and device.

E. Submit voltage drop calculations for all alarm circuits.

F. Submit battery calculations for the fire alarm panel with all devices under supervisory and alarm conditions.

G. Evidence of certification of the proposed fire alarm Contractor by both the State of Florida Department of Professional Regulation.

H. Written certification by the fire alarm Contractor that no power supply or circuit on the system has an electrical load greater than 80% of its rated capacity.

I. No equipment shall be purchased by the Contractor for the fire alarm system until the Architect has approved the above submittals in entirety and returned them to the Contractor.

J. It is the Contractor's responsibility to meet the entire intent of the specifications. Approved submittals shall only allow the Contractor to proceed with the installation and shall not be construed to mean that the Contractor has satisfied the requirements of these specifications.

K. The contractor shall provide the following:

1. Hourly, Non-Standard, Holiday, and Overtime Service Rates.
2. Semi-Annual inspection rates. These services are to be performed by factory trained and authorized personnel, for this installed System with the submittal. These hourly service rates shall be guaranteed for a three-year period beyond the three-year warranty period. The Contractor shall also provide Annual Inspection Rates for System Testing in compliance with

NFPA 72 requirements for three years of system operation. Proof of the level of factory training and authorization of the servicing Contractor shall be included in the submittal.

a. Evidence of listing by Underwriters' Laboratories for all proposed equipment for use as Fire Alarm equipment. (Ref.: Underwriters' Laboratories, Section UOJZ).
b. A Single Line System Block Diagram and written System Operational Overview.
c. Complete calculations showing the electrical load on the following system components:
    1) Each system Power Supply
    2) Each standby Power Supply (batteries)
    3) Each Notification Appliance Circuit.
    4) Each auxiliary control circuits that draw power from any system power supply.
d. Field Connection Drawings: A complete set of drawings, one for each Fire Alarm Control Panel module which has any external (field) wiring connected to it, and one for each system detector, module or signaling appliance, shall be supplied. The Field Connection Drawings shall be done under AutoCAD Version 2020 or later. They shall be provided on computer diskette and in paper format. Building floor plans of contract sheets will be furnished on diskette to the Contractor by the Architect without charge.
e. Warranty Statement from the manufacturer shall be provided as part of the submittal package. This warranty statement will state a 3 year period of warranty for all of the products proposed for the project, and shall include the name and address of the authorized manufacturers' agent who will honor any and all warranty claims.
f. Written Certification by the Fire Alarm Contractor that no power supply or circuit in the system has an electrical load greater than 80% of its rated capacity.
g. A scaled plan of building showing the placement of each individual item of fire alarm equipment as well as raceway size and routing, junction boxes, and conductor size, quantity, and color in each raceway.

1.4 QUALITY ASSURANCE:

A. Each and all items of the fire alarm system shall be listed as a product of a single fire alarm manufacturer under the appropriate category by Underwriters' Laboratories, Inc. (UL), and shall bear the "UL" label. All control equipment shall be listed under UL Category UOJZ as a single control unit. Partial listing will not be acceptable.

B. All control equipment shall have transient protection devices to comply with UL 864 requirements.

C. Manufacturer's Qualifications: All fire alarm equipment shall be the product of one manufacturer. System appliances and devices not manufactured by the control panel manufacturer shall be products regularly distributed by the control panel manufacturer and cross-listed by Underwriter's Laboratories for compatibility with the system control panel.

D. Installer's Qualifications: The installation and testing of all components of the system shall be performed by a Contractor holding a current certification issued by the State of Florida Department of Professional Regulation. The Contractor shall be certified as either an Alarm System Contractor – Type 1 or an Unlimited Electrical Contractor.

F. The fire alarm Contractor shall be an experienced firm regularly engaged in the layout and installation of automatic fire alarm systems. The Contractor shall have successfully completed the installation, testing, and warranty of systems of the scope of the largest system on this project at least three years prior to bid, and have regularly engaged in the business of fire alarm systems contracting continuously since.

G. The fire alarm Contractor shall have been certified by the State of Florida Department of Professional Regulation to install fire alarm systems, have been NICET Level III certified, and certified by one of the above listed approved equipment manufacturer to perform installation, testing, adjustment, maintenance, and repair on the approved manufacturer's equipment prior to the date of bid. The proposed fire alarm Contractor shall commence no work on the project until he furnishes evidence, satisfactory to the aforementioned certifications and receives notice to proceed with the installation from

the Architect.

H. Firms shall have been factory authorized service organization and stock spare parts.

1.5 WARRANTY AND MAINTENANCE:

A. The Contractor shall supply a 3-year warranty from date of commissioning for all Control System and Field Devices and appliances. The Contractor shall warrant the installed fire alarm system to be free from defects of material and installation for a period of 3 years from acceptance by the Architect. Any deficiencies shall be immediately corrected at no additional cost to the Owner. The Contractor shall maintain a service organization with adequate spare parts stock within 150 miles of the installation. Any defects that render the system inoperative shall be repaired within 24 hours of the Owner notifying the Contractor. Other defects shall be repaired within 48 hours of the Owner notifying the Contractor.

B. The Factory Trained and Authorized Contractor who Designed and Installed this system shall provide a separate maintenance contract for a period of 3 Years from the date of system warranty expiration. As part of the systems maintenance, the installing Contractor will provide printed out reports which detail the sensitivity of each smoke detector installed in the system, and the date of the report.

C. The Fire Alarm System supplied shall include a store of spare system sub-assemblies and field devices for use as emergency service stock. As a minimum, the spares stock shall include 2% of each different type of field connected device.

PART 2 - PRODUCTS

This Fire Alarm System Specification must be conformed to in its entirety to ensure that the installed and programmed System will function as designed, and will accommodate the future requirements and operations required by the building Owner. All specified operational features will be met without exception.

2.1 SYSTEM OVERVIEW AND DESCRIPTION:

A. The Fire Alarm System supplied under this specification shall be a microprocessor-based direct wired peer to peer network system. The system shall utilize independently addressed, and microprocessor-based smoke detectors, heat detectors, and modules as described in this specification.

B. All Fire Alarm equipment shall be arranged and programmed to provide an integrated system for the early detection of fire, the notification of individual system building occupants, the automatic summoning of the local Fire Department, the override of the HVAC system operation, and the activation of other auxiliary systems to inhibit the spread of fire and to facilitate the safe evacuation of building occupants

C. The fire alarm equipment shall be installed in the locations shown on the project drawings.

D. The fire alarm system shall be fully supervised for the detection and reporting of the derangement of any component or circuit on the system. Signaling Line Circuits shall provide the level of performance designated as, Style 7 by UL and the NFPA. Indicating circuits shall provide the level of performance designated as Style Y by UL and the NFPA.

E. The fire alarm system shall be microprocessor driven with stored program controllers. Each panel node on the network shall use a multiple microprocessor design so that the failure of a single microprocessor will not result in a local failure. Fire alarm systems that utilize only one microprocessor for system and SLC control will not be accepted.

F. The fire alarm system shall operate from direct current having a nominal potential of 24 volts. The direct current shall be provided by a solid-state power supply connected to the building electrical sys-

tem by a dedicated branch circuit in strict compliance with Articles 725 and 760 of the NEC, and these specifications.

G. A standby power supply shall automatically supply electrical energy to the system whenever the primary power supply fails to provide the minimum voltage required for proper system operation. The standby power supply shall be an electrical battery with capacity to operate the system under maximum supervisory load for 24 Hours in Standby and then be capable of operating the system for 5 Minutes in the alarm mode. The fire alarm system shall include a charging circuit to automatically maintain the electrical charge of the battery. The fire alarm system shall include the alarm initiating and indicating appliances and devices shown on the project drawings.

H. All Control Panel Assemblies and the connected Automatic and Manual Alarm and Field Notification Appliances shall be designed and manufactured by the same company, and shall be tested and cross-listed as compatible (UOJZ) to ensure that a fully functioning system is designed and installed.

I. Provide and install all required equipment and accessories necessary for the proper operation of the system.

2.2 GENERAL EQUIPMENT AND MATERIAL REQUIREMENTS:

All equipment furnished for this project shall be new and unused. All components and systems shall be designed for uninterrupted duty. All equipment, materials, accessories, devices, and other facilities covered by this specification or noted on contract drawings and installation specifications shall be the best suited for the intended use and shall be provided by a single manufacturer.

A. The manufacturer's representative and a verification certificate presented upon completion shall verify system installation and operations. The manufacturer's representative shall be responsible for an on-site demonstration of the operation of the system and initial staff training as defined by this specification.

B. The system shall include a manner to display field device topology.

C. In addition, As-Built riser and wiring diagrams reflecting all terminations, each programmed device characteristic including detector type, base type, serial number, sensitivity setting and wire configurations will be provided to the Architect, based on the information gathered during the verification process described above. The fully executed sworn affidavit (at the back of this section) will be provided to the Architect with the As-Built riser and wiring diagrams verifying their accuracy.

D. It shall be possible for authorized service personnel to change the personality/function of the connected intelligent devices to meet changes in building layout or environment.

E. Equipment and material furnished shall comply with the latest revisions of applicable codes and standards of Underwriters Laboratories, Inc., ANSI, NEMA and NFPA and shall be listed, approved and labeled for the applications. Except as noted, all system components shall be built and tested by the same manufacturer, providing a single source or responsibility.

2.3 Approved Manufacturers:

A. GE EST IV Series or compatible with existing system of the same.

(1) FIELD PROGRAMMING:

The system shall be programmable, configurable and expandable in the field without the need for special tools or PROM programmers and shall not require replacement of memory ICs. All pro-

grams shall be stored in non-volatile memory. The programming function shall be entered with a special password that may be changed in the field to a new value at any time by entering the old password and requesting a password change.

2.4 CONTROL PANEL OVERVIEW:

The Fire Alarm System shall be a Multi-Processor Based Network System designed specifically for Fire and Security applications. The System shall be UL listed under Standards 864 (Control Units for Fire-Protective Signaling Systems) under categories UOJZ and APOU. The specified modules shall also be listed under UL 1076 (Proprietary Burglar Alarm Units and Systems) under category APOU. All new devices and circuits shall be addressable. The new panel shall have sufficient battery capacity to handle all new devices with a 50% reserve.

A. The System shall include all required hardware and system programming to provide a complete and operational system, capable of providing the protected premises with the following functions and operations:

1. All System operational software is to be stored in non-volatile memory. Systems that utilize dynamic RAM or static RAM for program storage are unreliable and will not be accepted.
2. Control Panel disassembly, and replacement of electronic components of any kind shall not be required in order to upgrade the operations of the installed system to conform to future application code and operating system changes.
3. System response to any alarm condition must occur within 3 seconds, regardless of the size and the complexity of the installed system.
4. All initial system programming, as well as all any changes made to the system programming during the start-up and system acceptance phase, shall be made electronically, and shall not require the use of diode matrices or other hardware destructive means. All changes shall be fully documented in the as-built documentation package. Systems which store initial programming or field programming changes in battery backed memory shall not be accepted
5. The system shall allow the testing of the entire installed system (Walk Test) dependent only on the needs of the testing agency, and of the occupancy requirements of the building. The testing of the installed system shall not be defined or limited by the physical layout of the Fire Alarm System, or its application to the protected premises.
6. The Fire Alarm System shall utilize Surface Mount Technology in its internal elements to increase reliability of each system component, and the system as a whole.
7. Ground Faults localized to the network node. If ground faults occur on the field wiring of the system, then the electrical location of those field-wiring faults shall be identified and annunciated to the network node, electronic loop controller, or the device where the fault has occurred.
8. All of the operational interface hardware needed to allow the system to function, as a network, shall be included with the Fire Alarm System. No additional interfaces or electronic modules shall be required to enable the system to function as a true network.
9. The Control of any or all of the System Common Control Functions shall be automatically routed, through the system operational program, to any node of the installed system as an automatic function of the time of day and/or date.

3 VOICE EVACUATION EQUIPMENT:

A. Integrated Audio: The Fire Alarm System shall incorporate a true digital integrated audio system into the network, multiplexing 4 independent audio channels over a single pair of wires. The system shall include distributed audio amplifiers, one for each speaker circuit, for system survivability. Tone generators shall also reside in each amplifier cabinet in case of message failure. The backup tone shall be a temporal tone to allow evacuation signals to be broadcast in the protected premises in the event of a loss of data communication from the multiplexed audio riser.

A. A digital message unit shall be provided which provides up to 15 minutes of prerecorded emergency messaging. The message contained in the fully digital message unit shall be

recordable and changeable in the field on a computer. Keying of either microphone shall allow a live evacuation announcement

B. Audio Source Unit:

1. The Fire Alarm System shall be provided with the fully integrated Emergency Communications System. The Emergency Communications System shall include a paging microphone at the FACP and a remote microphone in the main theatre sound booth, digital message playback unit, and 4 fully digitized and multiplexed Audio Channels. Four dedicated page mode control switches shall provide the emergency operator with instantaneous one touch paging to safely control the staged evacuation of building occupants. Automatic programming shall dynamically group the most frequently targeted paging zones.
   a. The “All Call” switch will direct the manual page to the entire facility.
   b. The “Page to Evac” switch will direct the manual page to those building are as automatically receiving the Evacuation Signal.
   c. The “Page to Alert” switch will direct the manual page to those building are as automatically receiving the Alert Signal.
   d. The “All Call Minus” switch will direct the manual page to those building areas which are programmed to receive the auxiliary and general channel connections such as stairwells
2. The system shall have paging control switches and LEDs to support specific zone selection as shown on the plans. The zone control / displays shall confirm amplifier selection and annunciate amplifier and amplifier circuit trouble.
3. The system shall automatically deliver a preannounce tone of 1000 Hz for three seconds when the emergency operator presses the microphone talk key. Either at the FACP or the remote microphone in the main theater sound booth. A ‘ready to page’ LED shall flash during the preannounce and turn steady when the system is ready for the user’s page delivery.
4. The system shall include a page deactivation timer, which activates for 3 seconds when the emergency user releases the microphone talk key. Should the user subsequently press the microphone key during the deactivation period, a page can be delivered immediately. Should the timer complete its cycle the system shall automatically restore emergency signaling and any subsequent paging will be preceded by the pre-announce tone. A VU display shall display voice level to the emergency operator.

C. Audio Amplifiers:

1. Each audio power amplifier shall have integral audio signal de-multiplexers, allowing the amplifier to select any one of eight digitized audio channels. The channel selection shall be directed by the system software. Up to 4 multiple and different audio signals must be able to be broadcast simultaneously from the same system network node.
2. Each amplifier output shall include a dedicated, supervised 25 Vrms speaker circuit that is suitable for connection of emergency speaker appliances. Each amplifier shall also include a notification appliance circuit rated at 24Vdc @ 3.5A for connection of visible (strobe) appliances. This circuit shall be fully programmable and it shall be possible to define the circuit for the support of audible, visible, or ancillary devices.
3. Standby Audio amplifiers shall be provided that automatically sense the failure of a primary amplifier, and automatically program themselves to select and de-multiplex the same audio information channel of the failed primary amplifier, and fully replace the function of the failed amplifier.
4. In the event of a total loss of audio data communications, all amplifiers will default to the local “EVAC” tone generator channel. If the local panel has an alarm condition, then all amplifiers will sound the EVAC signal on their connected speaker circuits.
5. In the event of a loss of the fully digitized, multiplexed audio riser, the audio amplifiers shall automatically default to an internally generated alarm tone, which shall be operated at a 3-3-3 temporal pattern.
6. Audio amplifiers shall automatically detect a short circuit condition on the connected speaker circuit wiring, and shall inhibit it from driving into that short circuit condition.

7. The Audio System shall include sufficient battery standby for 5 minutes of alarm after a 24-hour building power failure.

4 CONTROL PANEL OPERATION:

A. When an alarm condition is detected by one of the systems initiating devices, the following functions shall immediately occur:

1. The system alarm LED shall flash.
2. The local sounding device in the panel shall be activated.
3. The LCD display shall indicate all pertinent information associated with the alarm and its location.
4. The appropriate status change message shall be sent to the central station by an integral digital communicator.
5. All automatic programs assigned to the alarm point shall be executed and the associated indicating devices and relays addressed and activated.

B. Operation of any manual or automatic initiating device shall sound all alarm signals and shall also sound an alarm and indicate the zone activated on the fire alarm annunciator panels. Flashing light at each audible alarm shall operate with the audible alarm device.

C. Operation of any manual or automatic initiating device shall shut down air handling units. Locations shall be as shown on the Drawings.

D. Malfunction of supervised circuits shall indicate as "Trouble" on the fire alarm annunciator panels. An audible and visual signal shall indicate trouble with provisions to silence the audible signal but not the visual indication.

E. Operation of the fire alarm system and "Trouble" shall operate the necessary contacts that may be connected via telephone lines to remote locations.

F. When a trouble condition is detected by one of the system initiating devices, the following functions shall immediately occur:

1. The system trouble LED shall flash.
2. A local sounding device in the panel shall be activated.
3. The 80-character LCD display shall indicate all pertinent information associated with the trouble condition and its location.

5 FUNCTIONAL OPERATION OF THE FIRE ALARM SYSTEM:

A. Alarm detection: When a fire alarm condition is detected by one of the system initiating devices, the following functions shall immediately occur:

1. The System alarm indicator shall flash continuously.
2. A local sounding device in the panel shall be activated.
3. The control panel display shall indicate all pertinent information associated with the alarm and its location.
4. All automatic programs assigned to the alarm point shall be executed and the associated indicating appliance circuits and control relays addressed and activated.

B. System trouble detection: When a trouble condition is detected by one of the system initiating devices, the following functions shall immediately occur:

1. The System Trouble indicator shall flash.
2. A local sounding device in the panel shall be activated.
3. The control panel display shall indicate all pertinent information associated with the trouble

condition and its location.

4. However, unacknowledged alarm messages shall have priority over trouble messages, and if such an alarm must also be displayed, the trouble message shall not be displayed until the operator has acknowledged all alarm messages.

C. Short circuit fault isolation: The system shall contain a method of isolating wire-to-wire short circuits on an SLC loop in order to limit the number of detectors or elements that are incapacitated by the short circuit fault. If a wire-to-wire short occurs, the system shall automatically disconnect a down-stream segment of the SLC that contains the short circuit fault. When the short is corrected, the isolated section of the SLC loop shall automatically be reconnected to the SLC and full communication between the control panel and all affected devices restored.

D. Control switch operation: The system control panel shall provide at least the following switches for system control:

1. Acknowledge Switch: Activation of the control panel Acknowledge switch in response to a single new trouble or alarm condition shall silence the panel sounding device and change the System Alarm or Trouble LEDs from flashing to steady-ON. If additional new alarm or trouble conditions exist in the system, activation of this switch shall scroll the display to any queued subsequent alarm or trouble conditions that exist, and shall not silence the local audible device or change the LEDs to steady until all queued conditions have been so acknowledged. New alarm conditions shall always be displayed before new trouble conditions. Activation of the Acknowledge switch shall also cause a corresponding message to be displayed on System displays and Printers.
2. Signal Silence Switch: Activation of the Signal Silence Switch shall cause all appropriate indicating appliance circuits and relays to return to the normal condition after an alarm condition. The selection of indicating appliance circuits silenced by this switch shall be fully programmable from the system control panel. The system shall also include a means through system programming to allow for signal silences inhibit time.
3. System Reset Switch: Activation of the System Reset Switch shall cause all initiating devices, indicating appliance circuits, and associated output devices to return to the normal condition. If alarm conditions exist in the system after the System Reset Switch activation, the system shall then repeat the alarm sequence.
4. Lamp Test Switch: Activation of the Lamp Test Switch shall turn on all LED indicators, system graphic display, and then return all indicators to the previous condition.

6 SERVICE/TESTING AIDS:

A. Automatic detector test: The system shall include a Resident Automatic Detector Sensitivity Test, which satisfy the NFPA and UL requirements for detector sensitivity test. No additional calibrated tests are required if the system indicates the smoke detectors are with in the normal sensitivity range.

B. Watch-dog circuits: The system shall include "Watch-Dog" circuits to detect and report failure of any microprocessor circuit, memory, or software.

C. Field programming: The system shall be totally programmable, configurable and expandable via programming. Systems which require special tools, PROM programmers, or replacement of software media to effect permanent program changes will not be accepted. All programs shall be stored in non-volatile memory. The programming function shall be accessed via a special password, which shall be selected when the system is installed. The password shall be changeable in the field at any time by entering the old password and requesting a password change. All software shall be supplied with the system so that the Owner may fully program and maintain the system.

7 FIRE ALARM SYSTEM OPERATORS' INTERFACE:

A. The system display: The display shall provide the means to inform the System Operator with detailed information about the off-normal status of the installed Fire Alarm System. The LCD display shall automatically respond to the status of the system, and shall display that status in 80-character front panel display.

B. Automatic functions: The following status functions shall be annunciated by the LCD Display:

1. When the Fire Alarm System is in the "Normal" Mode, the panel displays:
   a. The current Date and Time.
   b. A Custom System Title (minimum 2 lines X 21 characters).
   c. A summary total of system events.
2. With the Fire Alarm System in the "Alarm" Mode, the display shall automatically reconfigure into four logical windows.
   a. Systems Status Window: The DISPLAY shall show the system time and the number of active points and disabled points in the system in this section of the DISPLAY.
   b. Current Event Window: The DISPLAY shall show the first active event of the highest priority in reverse text to highlight the condition to the Emergency Operator. The top line of the reversed text shall show the sequence number in which the displayed event was received, as well as its event type. The second and third lines of reversed text shall display an identification message related to the displayed event.
   c. Last Event Window: The DISPLAY shall show the most recent, highest priority event received by the system.
   d. Type Status Window: The DISPLAY shall show the total number of active events in the system, by event type. There shall be four different System Event Types which shall be displayed, "Alarm Events", "Supervisory Events", "Active Trouble Events", and "Active Monitor Events".

8 System protected premises circuit interface: An Electronic Loop Controller (SLC) shall be provided in each Fire Alarm Control Panel (where needed), to interface between the panel and the Analytical Microprocessor-based Detectors and modules. On each electronic loop controller in the system there shall be a minimum of 20 spare sensor addresses and 20 spare module addresses for future expansion.

A. The communications format used by this controller shall be 100% digital. Communications between the Fire Alarm Control Panel and the Analytical Microprocessor-based Detectors and modules shall incorporate both BROADCAST POLLING and DIRECT ADDRESS SEARCH (serial polling communication) methods for increased integrity and decreased system response time.

B. The Electronic Loop Controller (SLC) shall communicate to the connected detectors and modules utilising any wiring material or method complying with Chapter 3 of the National Electrical Code (ANSI/NFPA 70-1996). The Electronic Loop Controller shall not require special cables or home run connections to operate. "T" Tapping and parallel wiring shall be permitted on those Signalling Line Circuits designated as Style 4.

C. It shall be possible to connect the electronic loop controller to the Analytical Microprocessor-based Detectors and modules as Style 4 circuits without the use of special shielding, twisted wire, or conduits. It must be possible to wire branch circuits (T-Taps) from Style 4 Circuits. Each Electronic Protection Loop can be configured to operate as a Style 7 loop without the need for additional hardware modules.

D. The electronic controller, through the system program, shall provide the ability to set the sensitivity and alarm verification time of each of the individual Analytical Microprocessor-based Detectors on the circuit. It shall be possible to automatically set the sensitivity of each of the individual intelligent detector for day and night periods.

E. All system programming and history shall be permanently stored in non-volatile memory to ensure that no programming or history is lost. Systems which store initial programming or field programming changes in battery backed memory shall not be accepted.

F. The Electronic Loop Controller shall be capable of addressing all Analytical Microprocessor-based Detectors and modules connected to it electronically, without the need to set switches at any of the individual devices.

G. The Electronic Loop Controller shall provide a minimum of 5 levels of supervision for each smoke detector on the circuit:

1. Device Location
2. Unexpected Device Add/Delete
3. Missing Device Address
4. Changes in the Physical Wiring of the Loop Circuit
5. Changes in Device Personalities

H. The Electronic Loop Controller (SLC) shall detect the electrical location of each connected detector and module. The location and type of each connected device shall be mapped and stored in memory in the loop controller. It shall be possible to access and display this map at any time.

I. The Electronic Loop Controller shall be capable of reporting any additional device addresses, which may have been added to the circuit, and/or changes that may have been made to the wiring in the data circuit. A specific trouble shall be reported for any and all off-normal non-alarm condition.

J. The Electronic Loop Controller (SLC) shall be able to report the following information on a per addressable device basis.

1. Device Address
2. Device Type
3. Current Detector Sensitivity Values and the Extent of Environmental Compensation for smoke detectors.
4. Specific trouble codes to diagnose device / wiring faults.
5. Cumulative Number of Alarms and Troubles.
6. Date of Last Alarm.
7. Alarm Verification Cycle Count.
8. Date of Last Maintenance for the Device.

K. The Electronic Loop Controller shall notify the System Operator when any connected smoke detector reports a “Routine Maintenance Required” signal to the system.

L. If an Electronic Loop Controller should fail to communicate, the circuit shall automatically switch into the stand alone alarm mode. In the stand-alone alarm mode, the circuit shall be capable of producing a loop alarm if any of the connected alarm type intelligent devices become active.

M. To enhance the survivability of the entire installed Fire Alarm System, all Electronic Loop controllers shall be located no more than 1 floor away from the area which they are applied to protect.

9 Hard wired nac circuits: Provide where indicated on the plans supervised hard-wired Notification Appliance Circuits (NAC) for the control of 24Vdc signaling appliances. Each NAC shall operate as a Class B (Style Y) circuit, and shall be capable of controlling up to 3.5 amps of signaling power.

A. Provide where indicated on the plans supervised hard-wired Notification Appliance Circuits (NAC) for the control of 70.7Vrms Audio Signaling Appliances. Each NAC shall operate as a Class B (Style Y) circuit, and shall control up to 35 Watts of signaling power.

B. Provide where indicated on the plans supervised hard-wired Notification Appliance Circuits (NAC) for the control of 25Vrms Audio Signaling Appliances. Each NAC shall operate as a Class B (Style Y), and shall control up to 50 Watts of power to the circuit.

C. Panel NACs shall be power limited to 3.5A at 24Vdc and 4.1A at 20.4Vdc to support higher current demand by visible appliances at lower battery voltages.

10 SYSTEM PROGRAMMABLE OPERATIONS: System Message Processing and Display Operations:

A. The routing of all network annunciation and control parameters shall be configurable to any or all nodes in the network manually, or automatically as a function of the time of day or date.

B. All of the system Printer ports can be configured to display any or all of the following functions:

1. Alarm
2. Supervisory
3. Trouble
4. Monitor
5. Service Group

C. Each Display located anywhere in the system shall be configurable to show the status of any or all of the following functions pertaining to any point anywhere in the entire network system:

1. Alarm
2. Supervisory
3. Trouble
4. Monitor

D. The system shall provide the capability to label each point in the system with up to 256 characters of custom message.

E. The system shall have the capability to provide up to 128 logical “Counting AND” Groups. Each group shall have a programmable ‘activation’ number. Whenever the number of active devices in an AND Group reaches the activation number, the AND Groups’ rules will execute. It shall be possible to ‘overlap’ AND groups by having devices appear in more than one group.

F. The system shall have the ability to define a minimum of 128 Matrix Groups with up to 250 points in each group. For each matrix, it shall be possible to define a ‘radius’ and an ‘activation’ number. The radius number defines the proximity between detector locations. When two detectors activate at or within the value of the ‘radius’ or whenever the number of active devices reaches the activation number the Matrix Group activates. It shall be possible to ‘overlap’ Matrix groups by having devices appear in more than one group.

G. The system shall include the ability to define an alternate set of device commands which may be used in combination with the system test command for the testing of the connected Intelligent Smoke Detectors. This function shall disable the normal alarm command for each of the members of the group, so that the testing process will not result in an activation of the building evacuation signals, auxiliary relays or central station connections.

H. The system shall include Time Control functions which will have the ability to control any system output or function, or initiate any system operational sequence as a function of the Month, Day of Week, Date, Hour, Minute, or Holiday.

I. The system shall provide the ability to download data from the intelligent systems Detectors to a P.C. while the system is on-line and operational in the protected premises. The downloaded data may then be analyzed in a diagnostic program supplied by the system manufacturer.

11 FIELD MOUNTED SYSTEM COMPONENTS:

A. Analytical Microprocessor-based Detectors - General Operation The System shall use Analytical Microprocessor-based Detectors that are capable of full digital communications with the Fire Alarm System using both broadcast and polling communications protocols. Each detector shall be capable of performing independent advanced fire detection algorithms. The fire detection algorithm shall measure sensor signal dimensions, time patterns and combines different fire parameters to increase reliability and distinguish real fire conditions from unwanted nuisance alarms caused by environmental events. Signal patterns that are not typical of fires shall be eliminated by digital filters and shall not cause a system alarm condition. Devices not capable of combining different fire parameters or employing digital filters shall not be acceptable.

B. Each smoke detector shall have an integral microprocessor capable of making alarm decisions based on fire parameter information stored in the detectors' memory. Detectors not capable of making independent alarm decisions shall not be acceptable. Maximum total loop response time for detectors changing state (alarm or trouble) shall be 0.5 seconds.

C. Each smoke detector shall have a separate means of displaying system communication and detector alarm status. A green LED shall flash to confirm communication with the system through the electronic loop controller. A red LED shall flash to indicate that the detector is in alarm. If communications between the detector and the electronic loop controller is lost, both LED's will illuminate steady to indicate an alarm in the "standalone mode". Both LEDs shall be visible through a full 360 degree viewing angle.

D. Each smoke detector shall be capable of identifying diagnostic codes to be used for system maintenance. All diagnostic codes shall be stored in the detector.

E. Each smoke detector shall be capable of transmitting pre-alarm and alarm signals to the Fire Alarm Control Panel via the Electronic Loop Controller. It shall be possible to program Fire Alarm Control Panel activity and response to each of the following signal levels:

1. Normal
2. Pre-Alarm
3. Alarm
4. Trouble
5. Detector Need Cleaning

F. Each smoke detector may be individually programmed to operate at any one of five (5) sensitivity settings.

G. Each smoke detector microprocessor shall contain an environmental compensation algorithm, which identifies and sets ambient "Environmental Thresholds" continually and periodically. In this manner, the environmental impact of temperature, humidity, environmental contaminates as well as detector aging shall be automatically monitored. This process shall employ digital compensation techniques to adapt the detector to both long term and short term changes in the environment in which they are installed. The microprocessor shall monitor this environmental compensation value and alert the system operator when the detector 80% of the allowable environmental compensation value. Differential sensing algorithms shall maintain a constant differential between selected detector sensitivity and the derived base line sensitivity that the detector has sensed in its environment. The base line sensitivity information shall be automatically and periodically updated and permanently stored in the detector.

H. The Analytical Microprocessor-based Detectors together with the Electronic Loop Controller shall provide increased system reliability and inherent survivability through intelligent standalone conven-

tional alarm operation. The detectors shall automatically change to standalone conventional device operation in the event of an electronic loop controller communications failure. In the standalone conventional detector mode, the micro-processor-based detector shall continue to operate using sensitivity and environmental compensation information stored in its microprocessor at the time of the communications failure. The electronic loop controller shall continue to monitor the communications loop and activate a loop alarm if any of the connected analytical microprocessor based detectors reach their stored alarm sensitivity threshold.

I. Each detector shall be capable of automatic electronic addressing and/or custom addressing without the use of DIP or rotary switches, and shall mount on a common base to allow the simple replacement of one detector type with another detector type. The addressing of the detectors shall not depend on the electrical position of the detector on the circuit.

12 ANALYTICAL MICROPROCESSOR-BASED DETECTORS - FIXED TEMPERATURE HEAT DETECTOR:

A. The intelligent heat detector shall have a solid-state heat sensor, and shall transmit an alarm at a fixed temperature of 135° F (57°C). The detector shall continually monitor the temperature of the air in its surroundings to minimize thermal lag to the time required to process an alarm. The integral microprocessor shall determine if an alarm condition exists and initiate an alarm based on its' analysis of the area of installation. The heat detector shall be rated for ceiling installation at a minimum of 70 ft (21.3m) centers and be suitable for wall mount applications

B. Systems using central processing methods to monitor the inputs from a circuit of analog sensors to detect a fire will not be accepted.

13 ANALYTICAL MICROPROCESSOR-BASED DETECTORS - PHOTOELECTRIC SMOKE DETECTOR:

A. The Analytical Microprocessor-based photoelectric detector shall utilize a light scattering type photoelectric smoke sensor to detect visible particulates produced by combustion. The integral microprocessor shall dynamically examine values from the sensor and initiate a system alarm based on the analysis of data. Systems using central intelligence for alarm decisions shall not be acceptable. The detector shall continually monitor any changes in sensitivity due to the environmental affects of dirt, smoke, temperature, aging and humidity. The information shall be stored in the detectors' memory and shall be transferred to the electronic loop controller for retrieval using a laptop PC or the Intelligent Detector Program/Service Tool designed by the manufacturer specifically for the purpose. The photoelectric smoke detector shall be rated for area applications when installed at a minimum of 30 ft (9.1m) centers and shall be suitable for wall mount applications. The photoelectric smoke detector shall be suitable for direct insertion into air ducts up to 3 ft (0.91m) high and 3 ft (0.91m) wide with air velocities up to 5,000 ft/min (0-25.39 m/sec) without requiring specific duct detector housings or sampling tubes.

B. The alarm set point shall be field selectable to any of five sensitivity settings ranging from 1.0% to 3.5% smoke obscuration per foot. The photo detector shall be suitable for operation in the following environment:

1. Temperature: 32°F to 120°F (0°C to 49°C)
2. Humidity: 0-93% RH, non-condensing

3. Elevation: no limit

C. In the event of a loss of communications of the smoke detector with the Electronic Loop Controller, the smoke detector will automatically revert to the "Standalone Conventional" operation, and Fire Alarm System functions shall not be compromised.

14 ANALYTICAL MICROPROCESSOR-BASED DETECTORS - MOUNTING BASES:

A. All Analytical Microprocessor-based Detector mounting bases shall provide a means to mount the detector to a [North American 1-gang, 3½" or 4" octagon box and 4" square box] [European BESA or 1-gang]. The mounting base shall not contain any electronics, shall support all Microprocessor-based Smoke detector types detailed in this specification, and have the following minimum requirements:

1. Removal of the respective detector shall not affect electronic loop communications with other detectors on that loop.
2. Field Wiring Connections shall be made to the room side of the base, so that wiring connections can be made or disconnected by the Contractor without the need to remove the mounting base from the electrical box.
3. The base shall be capable of supporting remote alarm annunciation.

15 ANALYTICAL MICROPROCESSOR-BASED DETECTORS - DUCT SMOKE DETECTION APPLICATIONS:

A. The Analytical Microprocessor-based photoelectric smoke detectors shall be readily adaptable for use directly in air duct smoke detection applications, in ducts 3 ft (0.91m) high and 3 ft (0.91m) wide. When used for duct smoke detection, the smoke detectors shall not forfeit any of the system functionality which they have when used as area smoke detectors.

B. Duct detector housing: The Analytical Microprocessor-based photoelectronic and Multi-Sensor smoke detectors shall be readily adaptable for use in air duct smoke detection applications, using a housing that mounts to the outside of the duct. When used for duct smoke detection, the smoke detectors shall not forfeit any of the system functionality which they have when used as area smoke detectors.

C. The duct smoke detection housing shall allow the detector to sample and compensate for, variations in duct air velocity between 300 and 4000 feet per minute (300 to 1000 for ion-photo-heat detector).

D. Remote alarm LEDs and Remote Test Stations shall be supported by the duct smoke detector.

E. All detectors used in duct applications shall be located in accordance with NFPA 72E recommendations.

16 ANALYTICAL MICROPROCESSOR-BASED DETECTORS – REMOTE ALARM LED.

Provide where indicated on the plans or where the detector is not in sight from the ground, a Remote LED Alarm Indicator for each smoke detector. LED shall have a 180-degree viewing angle and mount on a standard 1-gang box.

17 SINGLE RISER SIGNAL MODULE:

The Microprocessor-based Addressable Single Input Signal Module shall provide one (1) supervised Class B (style Y) Indicating Appliance Circuit capable of a controlling 2A of polarized 24 VDC Notification Appliances, 50W speaker circuit power @ 25VRMS, or 35W speaker circuit power @ 70VRMS.

A. The Microprocessor-based Addressable Single Riser Signal Module shall provide one (1) supervised Style Y Indicating Appliance Circuit (IAC) for the connection of a telephone call-in circuit. The module shall have the capability of generating its own “ring tone” to ensure that the Fire Fighter knows that they are connected to the telephone call-in circuit.

18 CONTROL RELAY MODULE:

A. Microprocessor-based Addressable Control Relay Modules shall provide one form “C” dry relay contact rated at 2 amps @ 24 Vdc to control external appliances or equipment processes. The control relay module shall be rated for pilot duty applications and releasing systems service. The position of the relay contact shall be confirmed by the system firmware. Non-addressable relays will not be allowed.

B. Door Controls: Door hold-open devices that are controlled by smoke detectors at doors in smoke-barrier walls shall be connected to fire-alarm system.

C. Secure Egress Door Controls: Provide an output signal using an addressable relay to unlock secured path of egress door devices upon system notification.

B. Elevator Recall:

1. Elevator recall shall be initiated only by one of the following alarm-initiating devices:
   a. Elevator lobby detectors except the lobby detector on the designated floor.
   b. Smoke detector in elevator machine room.
   c. Smoke detectors in elevator hoistway.
2. Elevator controller shall be programmed to move the cars to the alternate recall floor if lobby detectors located on the designated recall floors are activated.
3. Water-flow alarm connected to sprinkler in an elevator shaft and elevator machine room shall shut down elevators associated with the location without time delay.
4. Water-flow switch associated with the sprinkler in the elevator pit may have a delay to allow elevators to move to the designated floor.

19 MICROPROCESSOR-BASED ADDRESSABLE MANUAL PULL STATIONS – GENERAL:

The Fire Alarm System shall incorporate microprocessor-based addressable Manual Pull Stations connected over a 2-wire electronic communications loop, using both broadcast and serial polling protocols. All Manual Pull Stations shall display communications and alarm status.

A. All addressing of the Microprocessor-based Addressable Manual Single Action Pull Stations shall be done electronically, and the electrical location of each station shall be automatically reported to the Fire Alarm Control Panel, where it may be downloaded into a PC, or printed out. The addressing of the Manual Pull Station shall not be dependent on their electrical location on the circuit.

B. All Microprocessor-based Addressable Manual Pull Stations shall have a visual means to confirm communications with the FACP, and a visual means to confirm the alarm status of the modules.

C. All field wiring to the Microprocessor-based Addressable Manual Pull Stations shall be supervised for opens and ground faults. All ground faults shall be location annunciated to the module of incidence.

D. Diagnostic circuitry, and their associated indicators, with reviewable Trouble Codes, shall be integral to the Microprocessor-based Addressable Manual Pull Stations to assist in troubleshooting system faults.

E. All Manual Fire Alarm station shall be suitable for operation in the following environment:

1. Temperature: 32°F to 120°F (0°C to 49°C)
2. Humidity: 0-93% RH, non-condensing
3. Include ground fault to the device.

F. Each Manual Pull Station shall have a Stopper II Lexan cover.

20 MICROPROCESSOR-BASED ADDRESSABLE SINGLE ACTION FIRE ALARM STATION:

The Microprocessor-based Addressable Fire Alarm Stations shall be single action fire alarm stations. Provide a key locked test feature. Finish the station in red with white “PULL IN CASE OF FIRE” lettering.

21 FIRE ALARM NOTIFICATION APPLIANCES:

A. Fire alarm notification appliances – general requirements: All appliances which are supplied for the requirements of this specification shall be UL Listed for Fire Protective Service, and shall be capable of providing the “Equivalent Facilitation” which is allowed under the Americans with Disabilities Act Accessibilities Guidelines (ADA(AG)), and shall be UL 1971, and ULC S526 Listed. All appliances shall be of the same manufacturer as the Fire Alarm Control Panel specified to insure absolute compatibility between the appliances and the control panels, and to ensure that the application of the appliances are done in accordance with the single manufacturers’ instructions. Any appliances that do not meet the above requirements, and are submitted for use must show written proof of their compatibility for the purposes intended. Such proof shall be in the form of documentation from all manufacturers which clearly states that their equipment (as submitted) are 100% compatible with each other for the purposes intended. All strobes shall be provided with lens markings oriented for wall mounting. It shall be possible to replace the lens of any installed strobe in order to facilitate the replacement of a broken lens, or to change the orientation of the lens markings. Ceiling mounted strobes shall have lens markings with correctly oriented lettering. Removal of an installed strobe to facilitate the changing of a lens shall not be acceptable.

B. Self - synchronized strobes: Strobes shall be supplied by the same manufacturer as the Fire Alarm Control Equipment. In - Out screw terminals shall be provided for wiring. The Strobes shall have a red or white plastic faceplate. They shall provide the proper candela output for the project and synchronized flash outputs. The strobe shall have lens markings oriented for wall mounting.

C. The same manufacturer as the Fire Alarm Control Equipment shall supply strobes. In - Out screw terminals shall be provided for wiring. The Strobes shall have a red metal faceplate. Provide candela ratings as shown on drawings. All strobes in multi-outlet areas shall be synchronized.

D. Speaker/strobes - electronic type: Horns shall by the same manufacturer as the Fire Alarm Control Equipment. In - Out screw terminals shall be provided for wiring. The Horn shall have a red plastic housing. Horns shall be suitable for indoor or outdoor use. A sound output level of 103 dBA Peak shall be provided. It must not be necessary to completely remove the screws to facilitate mounting.

E. Horn/strobes shall by the same manufacturer as the Fire Alarm Control Equipment. The Horn/Strobes shall have a red plastic housing. Provide candela ratings as shown on drawings. All strobes in multi-outlet areas shall be synchronized. Removal of a installed Horn/Strobe to change the lens markings shall not be acceptable. Horns shall provide a 100 dBA Peak sound output. It must not be necessary to completely remove the screws to facilitate mounting.

22 EXTERIOR HORNS shall be recessed mounted in a red metallic weatherproof cast aluminum box.

23 SYSTEM WIRING:

A. Raceways and outlet boxes: Shall comply with all other applicable Division 26 Specifications. Minimum raceway size for the fire alarm system shall be 1/2". The complete raceway system shall be grounded and bonded in accord with the requirements of the NEC. Outlet boxes shall be installed in the approximate locations indicated on the Drawings. It is the responsibility of the Contractor to ensure that the final locations of fire detectors and other initiating and indicating appliances and devices are in compliance with all applicable codes.

C. Pathways above recessed ceilings and in nonaccessible locations may be routed exposed.

1. Exposed pathways located less than 96 inches above the floor shall be installed in EMT.
2. Pathways shall be installed in EMT unless within plenum space where plenum rated cabling may be used.
3. Exposed EMT shall be painted red enamel.

C. Conductors and terminations: Shall be copper with type THHN/THWN insulation. Minimum conductor size shall be #14 AWG except that signaling line circuit (SLC) loops shall be wired with UL listed type FPL cable comprised of a jacketed and electrically shielded pair of conductors #18 AWG or larger. If stranded conductors are used they shall comply with Sections 760-16(c), 760-28(a), and 760-30(a) of the NEC.

D. All circuits shall be identified using a unique conductor insulation color throughout the system for each type of circuit.

E. Termination of conductors shall be by means of factory wiring terminals or factory pigtails.

24 CIRCUIT PROTECTORS:

Shall have a line-to-line response time of less than one nanosecond capable of accepting greater than 2000 amps at 28 volts. Line-to-earth response time shall be less than one nanosecond with a maximum current of 2000 amps (35 joules each line) to earth. Shield to earth current shall be 5000

amps maximum. Spark gap devices or devices incorporated in or installed within the fire alarm control panel in lieu of the specified protector are not acceptable.

25 Networked Fire Alarm System

25.2.1 Network fire alarm control units shall include all features as described in this specification for stand-alone FACUs and shall have network communication capabilities as described herein.

25.2.1.1 All points monitored and controlled by a single node shall be capable of being programmed as “Public”. Each point made public to the network may be programmed to be operated by any other node connected to the network.

25.2.1.2 Network communications shall be capable of supporting “point lists” that can be handled as though they were a single point.

25.2.1.3 The network shall provide a means to log into any node on the system via a laptop computer and have complete network access (Set Host) for diagnostics, maintenance reporting, and information gathering of all nodes in the system. [The means shall include the capability to log into any node on the system via TCP/IP Ethernet network communications protocol compatible with IEEE Standard 802.3. Ethernet access to any fire alarm panel shall be capable of providing access only to authenticated users through a cryptographically authenticated and secure SSL tunnel. Provisions for a standard RJ-45 Ethernet connection to the owner’s Ethernet network must be provided at each node as part of the contract. Systems not meeting this requirement must provide all diagnostic tools required to support this function from selected points on the network. This Section covers fire alarm systems, including initiating devices, notification appliances, controls, and supervisory devices.

25.2.1.4 Network node communication shall be through a token ring, hub, or star topology configuration, or combination thereof.

25.2.1.5 A single open, ground or short on the network communication loop shall not degrade network communications. Token shall be passed in opposite direction to maintain communications throughout all network nodes. At the same time the status of the communication link shall be reported.

25.2.1.6 If a group of nodes becomes isolated from the rest of the network due to multiple fault conditions, that group shall automatically form a sub-network with all common interaction of monitoring and control remaining intact. The network shall be notified with the exact details of the lost communications.

25.2.1.7 Fiber optics communication shall be provided as an option via a fiber optics modem. Modem shall multiplex audio signals and digital communication via full duplex transmission over a single fiber optic cable, either single mode or multi mode.

25.2.1.8 The communication method shall be NFPA 72 style 7.”

PART 3 - EXECUTION

3.1 The entire system shall be installed in a workmanlike manner in accordance with approved manufacturers manuals and wiring diagrams. The Contractor shall furnish all conduit, wiring, outlet boxes, junction boxes, cabinets and similar devices necessary for the complete installation. All wiring shall be of the type recommended by the NEC, approved by local authorities having jurisdiction for the purpose, and shall be installed in dedicated conduit throughout.

3.2 All penetration of floor slabs and fire walls shall be fire stopped in accordance with all local fire codes. In addition, all walls shall be water-proofed at conduit penetrations.

3.3 END OF LINE RESISTORS:

Shall be furnished as required for mounting as directed by the manufacturer.

3.4 INSTALLATION OF CONTROL PANEL AND RELATED EQUIPMENT:

A. Installation of all Fire Alarm Control Equipment and Field Mounted Devices and Appliances shall be in strict compliance with the manufacturer's written instructions.

B. Connection of the fire alarm system power supply (supplies) to the electrical system shall be by a dedicated branch electrical circuit. The means to disconnect this circuit shall be accessible only to authorized personnel, shall be capable of being locked in the "on" position, and shall be clearly marked "FIRE ALARM CIRCUIT CONTROL" in accord with NFPA standards.

C. Batteries shall only be installed in the control panel enclosure when they are of the gelled-electrolyte type and where the control panel manufacturer recommends such installation.

D. The Control Equipment shall not be installed until all field wiring to the field mounted devices and appliances have been installed and the wiring on those circuits have been checked for faults and shorts, and any faults and shorts found have been corrected.

E. The Fire Alarm Contractor shall neatly lace all field wiring conductors in the gutter spaces of the control panels and secure the wiring away from all circuit boards and control equipment components. All field-wiring circuits shall be neatly and legibly labeled in the control panel. No wiring except homeruns from fire alarm system circuits and system power supply circuits shall be permitted in the control panel enclosure. Additionally, no wiring splices will be permitted in the control panel enclosure.

3.5 SYSTEM WIRING AND SUPERVISION:

A. Provide a Style 7 initiating and alarm circuits with electrical supervision for shorts and open conditions.

B. Install end-of-line resistors as required.

C. Power Supplies: The control panel shall receive 120 VAC power via the existing power supply for the current fire alarm control panel, unless otherwise shown.

D. All circuits requiring system operating power shall be 24 VDC and shall be individually fused at the control panel.

E. Control of auxiliary services:

1. Fan shut down relays. Only addressable control relays will be allowed.
2. Alarm initiation from kitchen extinguishing equipment.

F. Equip and wire system so that by energizing fire alarm audible signaling devices will also activate the following:

1. Interior strobe lights.
2. Fan shut-down circuits.
3. Release kitchen fire rated shutter after a 15 second time delay. Time delay shall be adjustable from 0 to 60 seconds.
4. Closing of the main gas service valve.

3.6 SYSTEM TEST AND CERTIFICATION / DEMONSTRATION:

The completely installed fire alarm system will be fully tested in compliance with Testing Procedures for Signaling Systems (ANSI/NFPA 72H). The Fire Alarm Contractor shall test:

A. Every alarm initiating appliance and device for proper response and program execution.

B. Every indicating appliance for proper operation and audible/visual output

C. All auxiliary control functions such as elevator capture, smoke door and damper release, and functional override of HVAC, ventilation, and pressurization controls.

3.7 The Architect shall be notified at least 10 working days prior to the scheduled testing so that he/she may be present for such testing. The testing will only be scheduled after "As-Built" Drawings are turned in with the Affidavit of True and Correct As-Built Drawings fully executed. Find blank affidavit at the end of this section.

A. After the system has been completely tested to the satisfaction of the Architect, and the building Owner; the Fire Alarm Contractor shall complete the Fire Alarm System Certification of Completion form published by the NFPA (Figure 1-7.2.1 in the National Fire Alarm Code). In compliance with published NFPA standards, parts 1, 2, and 4 through 10 shall be completed after the system is installed and the wiring has been checked. Part 3 shall be completed after the operational acceptance tests have been completed. The completed form signed by the qualifying agent of the Fire Alarm System Contractor shall be delivered to the Architect with the other system documentation required by these specifications.

3.8 DELIVERY OF SYSTEM DOCUMENTATION PACKAGE:

The Fire Alarm Contractor shall deliver two sets of the System Documentation Package to the Building Owners Representative and the Local Authority Having Jurisdiction. Final payment of the Contractor will not be authorized until the complete documentation specified herein is delivered to the Architect. The System Documentation Package shall consist of the following documents, to be provided after the fire alarm system has been completely installed and tested:

A. Operations and Maintenance Manuals which detail the operation and maintenance of the installed System. An "As-Built" copy of the scaled plan of each building showing the actual installed location of each piece of fire alarm equipment as well as the installed raceway sizes and routing, conductor sizes and quantities in each raceway, and the exact location of each junction box. The Affidavit of True and Correct As-Built Drawings shall be fully executed and turned in with "As-Built" drawings (as shown at the end of this section).

B. Point to Point diagrams of the entire System as installed and tested. Point to Point Diagrams shall include all connected Smoke and Heat Detectors and addressable Field Modules. In addition, "As-Built" riser and wiring diagrams reflecting all T-Taps, each programmed device characteristic including detector type, base type, serial number, sensitivity setting and wire configurations will be provided to the Architect, based on the information gathered during the system final testing process.

C. All "As-Built" drawings and diagrams shall be done and turned over to the Owner.

D. The application program (database) listing for the system as installed at the time of acceptance by the building Owner and/or Local AHJ (Disk and Hard copy printout).

E. Time and Date stamped report, which lists every Fire Alarm System Cabinet within the system. This report shall include date regarding each cabinet in the system, the hardware modules mounted in each cabinet, and the physical mounting location of each module.

F. A Time and Date stamped report, which lists every detector, module, switch and output circuit within the system. This report shall include addressing, custom labeling, device type, and physical location for each device.

G. A letter certifying that the installation is in strict compliance with all applicable codes and in strict compliance with the requirements of these specifications.

H. Two originals of the NFPA document titled “Fire Alarm System Certification and Description” completely filled-in and signed as required.

I. Name, address, and telephone of the authorized factory representative.

J. Written certification by the fire alarm Contractor that no power supply audio amplifier or circuit on the system has an electrical load greater than 80% of its rated capacity.

K. Copies of the manufacturers’ 3-year warranty on all the system components and the Contractors’ 3-year warranty on the installed system.

3.9 SYSTEM STARTUP:

A Factory Trained and Authorized Engineered Systems Distributor shall perform system Startup. A Contractor under the direction of the Factory Trained and Authorized Engineered Systems Distributor may perform certain functions of the Systems Startup Procedure.

3.10 INSTRUCTION OF OWNER:

The Fire Alarm Contractor shall schedule and execute an instruction class for the Building Owner, which details the proper operation of the installed fire alarm system. The instruction shall also cover the schedule of maintenance required by NFPA 72H and any additional maintenance recommended by the system manufacturer. This instruction shall also be separately furnished to the Local Municipal Fire Department if so requested by the Local Authority Having Jurisdiction. The instruction shall be presented in an organized and professional manner by a person factory trained in the operation and maintenance of the equipment and who is also thoroughly familiar with the installation. The Fire Alarm Contractor shall provide operations manuals or any other curricula that may enhance the instruction of the Building Owners or Local Municipal Fire Department in the operation and maintenance of the system.

3.11 WIRING:

A. All wiring shall be installed according to NEC standards per the drawings submitted by the authorized Engineered Systems Distributor, unless otherwise noted.

B. Where required, wiring shall be in metallic conduit solely for the fire detection and alarm system. Minimum conductor size shall be #14 AWG. Install and connect wiring in conformance with the recommendations and wiring diagrams provided by the Fire Alarm System manufacturer. Adhere to the zones indicated on the Drawings. Any non-metallic conduit shall be replaced with metallic conduit with no cost to the Owner.

C. All wiring shall be tagged, numbered, color-coded and terminated on terminal blocks in the cabinets, in boxes, at equipment and at devices. Wire nuts or splices shall not be used. Each set of zone conductors shall be tagged with the zone number on each conductor at termination (each end) and in each junction or pull box in the raceway system.

3.12 Mounting of fire alarm boxes shall be 48" above finished floor (Handicapped Code).

3.13 Junction boxes and cabinets for the Fire Alarm System shall be painted International "FIRE RED".

3.14 FIELD QUALITY CONTROL:

The system shall be installed and fully tested under the supervision of trained manufacturer's representative. The system shall be demonstrated to perform all the functions as specified.

3.15 Provide in a frame and under glass, computer generated, color-coded diagram of the building and site, indicating the zones by number. Install frame near the fire alarm control panel or the annunciator panel or at a location designated by the Owner's representative. Minimum size of the graphic shall be 11"x17".

3.16 TESTS:

Upon completion of the installation, the Contractor and the manufacturer's authorized representative together shall test every alarm initiating device for proper response and zone indication, every alarm signaling device for effectiveness, and all auxiliary functions. Repeat all tests with "NORMAL" power disconnected. The Owner and designated representative shall be given the opportunity to witness these tests. An itemized test report shall be submitted to the Owner, detailing and certifying all results.

3.17 WARRANTIES:

The Contractor shall warrant the complete fire alarm system wiring and equipment to be free from inherent mechanical and electrical defects for a period of 3 years specified herein from the date of placing the completed system in operation. The conductors shall be replaced on any loop that exhibits repeated ground faults. If the ground faults persist, each device on that loop shall be replaced. These repairs are to be considered warranty work and shall be performed at no additional cost to the Owner.

3.18 The equipment manufacturer shall make available to the Owner a maintenance contract proposal to provide a minimum of 2 inspections and tests per year in compliance with NFPA-72 guidelines.

3.19 The maintenance contract shall include an agreement by the manufacturer that it will provide to the Owner, verifiable evidence to substantiate its claim that damage to any part of the fire alarm system was caused by lightning. Such evidence shall include, but not limited to, proof that the surge entered the equipment either on power conductors, system ground or by communication lines. Proof that the surge was not related to switching, welding, motor starting, copy machines or equipment with silicon-controlled rectifiers such as battery chargers and un-interruptible power systems.

3.20 Furnish 3 bound copies of brochure including maintenance instructions, spare parts list, wiring diagram and troubleshooting check list.

END OF SECTION 28 31 11

THIS PAGE LEFT INTENTIONALLY BLANK

SECTION 30 00 00
GENERAL SITE WORK REQUIREMENTS

1. GENERAL

1.1 DESCRIPTION OF WORK
A. Includes but not limited to general procedures and requirements for site work.

1.2 INTENT
A. It is intent of Division 30 to provide supplemental information to contents of construction drawings on quality of materials, execution, measurement, etc. Sections are general in nature and may contain products and requirements for indeterminate conditions. Materials and products to be as shown on construction drawings. When specific material or product not shown on construction drawings, select from materials and products contained in specifications.
   1) Discrepancies between specifications and plans shall be brought to attention of Engineer for clarification. When discrepancies exist between selection of materials, execution, measurements, etc., most stringent condition to control unless directed otherwise by Engineer.
   2) Work of Division 30, including construction drawings, is intended to be consistent with the work of others. Notify Engineer of discrepancies or conflicts. Most stringent condition to control unless directed otherwise by Engineer.

1.3 RELATED SECTIONS
A. Division 30 sections.

1.4 ELEVATION REFERENCES
A. All elevations refer to the project elevation datum as shown on construction drawings.
   1) Vertical layout to be performed using the provided site benchmarks. In no case shall any other benchmark or elevation reference be used in construction of the project. Contractor shall not utilize elevations of existing improvements shown in the construction drawings or from other sources as a basis of construction. Failure to comply with these requirements may result in removal and replacement of improvements at no cost to Owner.
   2) In the event that benchmarks are disturbed or destroyed during construction, Contractor shall notify Surveyor for repair or replacement. Use of the provided benchmarks for vertical control should be performed in accordance with standard surveying techniques and the minimum technical standards for surveying in the State of Florida, FAC 5J-17. Prior to utilizing the benchmarks for vertical layout, Contractor shall check between a minimum of two provided benchmarks to insure their integrity.

B. Spot elevations shown on plans are to top of improvement or ground surface unless noted otherwise. Finished subgrade elevation beneath proposed improvement to be determined by deducting from shown elevation the improvement thickness in accordance with improvement details. Spot elevations furnished are sufficient to define the elevation for all improvements. Specific elevations for all improvements may not be shown when such improvement elevations may be determined based on the elevation of adjacent improvements, i.e. elevation of curb adjacent to pavement may not be shown and curb elevation is determined by adding curb height from details to pavement elevation.

C. Building slab elevation shown on plans is ground, base floor slab elevation excluding steps or recesses unless specifically dimensioned. Add or subtract to base floor elevation to achieve finished floor elevation. Refer to architectural plans for steps and recesses in slab. Finished subgrade elevation beneath proposed building slab and foundations to be determined by deducting from shown base floor slab elevation the slab thickness in accordance with building plans.

1.5 SPECIFICATION REFERENCES

A. All specifications and documents referenced to be of latest issue and to be considered a part of documents as though included. Terminology ***FDOT Section XXX*** references Florida Department of Transportation (FDOT) ***Standard Specifications for Road and Bridge Construction.*** Terminology ***FDOT Index No. XXX*** references FDOT ***Roadway and Traffic Design Standards.*** Terminology ***MUTCD XXX*** references Federal Highway Administration ***Manual on Uniform Traffic Control Devices, Sign No. XXX.*** Unless noted or directed otherwise, Contractor shall comply with recommendations in standard specifications as though they were requirements.

1.6 SUBMITTALS

A. Product Data: Submit 5 copies of product data, stamped approved by Contractor, on all applicable manufactured items including but not limited to:
   1) Castings.
   2) Control panel components.
   3) Erosion control products.
   4) Pipe and appurtenances.
   5) Pumps and appurtenances.
   6) Traffic Paint.
   7) Seed mix.

B. Shop Drawings: Submit 5 copies of shop drawings, stamped approved by Contractor, on all applicable constructed items including but not limited to:
   1) Pre-cast concrete structures.
   2) Control panels.
   3) Hatches and frames.
   4) Skimmers.

C. Operating Manuals: Submit 3 copies of a manual containing installation instructions, operating instructions, wiring diagrams, parts lists, and where applicable test data and pump curves for all pumping stations.

D. Quality Assurance Submittals: Submit following applicable reports directly to Engineer from testing services with copy to Owner, Contractor, and municipality or third party when item will be dedicated:
   1) Suitable fill and backfill material.
      (a) Maximum density/Optimum moisture content.
      (b) Field density and thickness.
      (c) Gradation
   2) Stabilization material.
      (a) Bearing Test (LBR)
   3) Base Material:
      (a) Bearing Test (LBR)
      (b) Optimum Moisture - Maximum Density
      (c) Gradation and Atterberg Limits
      (d) Field Density and Thickness
   4) Base Material (Asphalt Base Course):
      (a) Mix Design
      (b) Field Thickness
      (c) Aggregate Certificate
   5) Asphalt Surface Course:
      (a) Mix Design
      (b) Field Thickness
      (c) Aggregate Certificate
   6) Pavement Markings:
      (a) Material certification or
      (b) Manufacturer's literature
   7) Asphalt mix design.
   8) Concrete mix design.
   9) Filter material certified gradation test or letter.

10) Bacteriological Test Reports. Bacteriological testing must be performed concurrent to the as-built survey of the water system. If the as-built survey is delayed, bacteriological testing must be repeated at the time of the as-built survey for use in certification of the system. Bacteriological tests older than 60 days are not valid for use in system certification.
11) As-Built Survey in accordance with item 3.9 contained herein.

E. Approvals: Items requiring approval prior to installation to be submitted directly to Engineer with copy to Owner, Contractor, and municipality or third party when item will be dedicated a minimum of two weeks prior to installation.

1.7 QUALITY ASSURANCE

A. Testing and Inspection: Testing service will be engaged by Owner or Contractor, as specified in Contract Clauses, for quality control testing. Contractor to provide initial testing of materials for conformance to specifications.
   1) For projects involving improvements to be dedicated to a municipality or third party, additional testing or testing by special parties may be required. Verify testing and inspection requirements.
   2) For improvements within public right of ways and certain utility improvements, the right of way or utility Owner may have additional testing and inspection requirements. Verify testing and inspection requirements.
   3) Provide to Owner, Engineer, testing service, and municipality or third party a list of tests, inspections and associated party responsible for performing test or inspection.
   4) Coordinate all testing and inspections.
   5) Notify Engineer, testing service, municipality of third party and applicable agency inspectors 48 hours in advance of testing and inspections.

B. Guarantee: Neither the final certificate of payment nor any provisions in the contract documents nor partial or entire use or occupancy of the premises by the Owner shall constitute an acceptance of work not done in accordance with the contract documents or relieve the Contractor of liability in respect to any express warranties or responsibility for faulty materials or workmanship. The Contractor shall remedy any defects in work and pay for any damage to other work resulting therefrom which shall appear within a period of one year from the date of final acceptance of the work unless a longer period is specified. The Owner will give notice of observed defects with reasonable promptness. When applicable, the Contractor's Performance or Contract Bond shall remain in effect and cover this guarantee.

1.8 PROJECT CONDITIONS

A. Improvements on Adjoining Property (when applicable)
   1) Authority for performing work on property adjoining project site will be obtained by Owner prior to award of contract. Contractor to obtain copy of authorization prior to beginning work.
   2) Do not enter upon private property without permission of Owner or Lessee.
   3) Extent of work on adjacent property is indicated on Drawings.

1.9 UNDERGROUND FACILITIES

A. Plans show certain Underground Facilities, but do not purport to show in complete detail all such facilities or obstructions. Information shown was provided by others, obtained from available records and/or field locations of visible items, and is provided for convenience. Neither Owner, nor Engineer is responsible for accuracy or completeness of any such information or data.
B. Coordinate and obtain locates from utility Owners including potential utility Owners.
C. Obtain and review all known sources of information and records on utilities within area.
D. Locate vertically and horizontally all Underground Facilities marked, indicated, reported, or known, with sufficient accuracy to complete work or identify conflicts without damage to utility.
E. Notify Engineer when marked, indicated, reported or known utilities cannot be located. Do not perform work in any area with known but unfound utilities without authorization in writing by Engineer. Include following in notification:
   1) Type and size of utility.
   2) Subject area.
   3) Efforts made to determine location of item.

F. If an Underground Facility is uncovered or revealed which, in opinion of Contractor, results in a conflict which was not included in Construction Documents, promptly give written notice to facility owner, Owner, and Engineer and stop work before further disturbing conditions until such time as a determination is made on how to proceed. Engineer shall review Underground Facility and determine extent, if any, to which a change in Contract Documents is required. If Engineer determines that a change is required, then Engineer shall request a price from Contractor for change and issue a Change Order upon acceptance by Owner.
G. Coordinate Work with Owners of Underground Facilities during construction time period.
H. Protect all Underground Facilities.
I. Repair or replace Underground Facilities at no cost except for following:
   1) Damage to utilities of which Contractor had no knowledge and could not reasonably have been expected to have knowledge.
   2) Damage to utilities of which Contractor had knowledge, but was unable to accurately locate horizontally or vertically, and properly notified Engineer, and obtained Engineer's authorization to proceed.

2. PRODUCTS - NOT USED

3. EXECUTION

3.1 CONSTRUCTION LAYOUT SURVEY

A. Set construction stakes to mark location, alignment, elevation and grade of work. Stakes to be adequate in number, position and elevation so physical item can be constructed in accordance with plans. Construction layout survey to meet Florida minimum technical standards for land surveying (Chapter 5J-17, FAC), and to be performed by a person of adequate expertise. Failure to perform construction stakeout in accordance with construction plans may result in removal and replacement of improvements at no cost to Owner. Construction layout information is provided in form of dimensions and offsets and/or coordinates obtained through computer generation. Information is adequate for construction layout of improvements using standard surveying construction layout techniques. Do not scale information from plans or attempt to construct improvements without performing construction layout in accordance with information contained herein.

3.2 REMOVAL OF STRUCTURES AND OBSTRUCTIONS

A. Remove any existing above or below ground structure, structure part, fence, building or other encumbrance or obstruction upon or within limits of work and shown for removal, which interferes in any way with new construction.
B. Remove any abandoned below ground structure or utility within limits of work and shown for removal, which interferes in any way with new construction.
C. Do not remove any existing above or below ground structure when not shown in the work for removal without authorization.

3.3 PUBLIC CONVENIENCE AND SAFETY

A. It is sole responsibility of Contractor to comply and enforce all applicable safety regulations. Provide all necessary signage and markings to insure a safe site. Signage and marking adjacent to and within roadways to be in accordance with FDOT Section 102, FDOT Manual on Traffic Control and Safe Practices and FDOT Roadway and Traffic Design Standards.

3.4 DISTURBED AREAS

A. Restore areas disturbed by direct or indirect construction activities to a condition equal to condition prior to construction activities. When grassed areas are restored, type and method to be in accordance with Section 31 25 00.

3.5 SALVAGEABLE IMPROVEMENTS

A. Carefully remove items indicated to be salvaged, and store or remove at direction of Owner.

3.6 DISPOSAL OF EXCESS AND WASTE MATERIALS

A. Removal from Owner's Property: Unless directed otherwise, remove excess and/or waste materials, unsuitable and/or excess soils from Owner's property and dispose of off-site in legal manner. At option of Owner, retain suitable excess soils on-site.
B. Burning on Owner's Property: Burning is not permitted on Owner's property unless authorized in writing by Owner.
   1) Perform burning in accordance with applicable rules and regulations and obtain necessary permits.
   2) Remove waste materials remaining after burning operations off-site and dispose of in accordance with applicable regulations. In no case shall ashes remain within limits of property.
C. Removal to Designated Areas on Owner's Property: If so directed, transport excess and/or waste materials and/or unsuitable and excess soils to designated storage areas on Owner's property. Stockpile or spread as directed by Engineer.
D. Burial on Owners Property: Burial of waste material is not allowed.

3.7 TESTING REQUIREMENTS

A. General: Conduct testing in accordance with following. Allow testing service to inspect and approve work before further construction is performed. Testing requirements may be contained in geotechnical report or on plans. In event of a discrepancy, most stringent condition shall apply unless directed otherwise by Engineer. Tests, which must be repeated due to unsatisfactory results, will be at no additional cost to Owner. Testing to be in accordance with following standards.
   1) Limerock Bearing Ratio (LBR): FDOT LBR Method (FM 5-515).
   2) Maximum Density/Optimum Moisture Content: AASHTO T-180/ASTM D-1557.
   3) Field Density and Thickness: AASHTO T-191/ASTM D-1556 (sand cone method) or AASHTO T-204/ASTM D-2937 (drive cylinder method).
   4) Gradation: AASHTO M-92/ASTM D-422.
B. Pavement Sub-Grade/Sub-Base:
   1) Bearing Value: Perform one LBR test for each material source or as material changes.
   2) Maximum Density/Optimum Moisture Content: Perform one test for each soil type.
   3) Field Density and Thickness: Perform 1 test and thickness measurement for each 500 linear feet of roadway or 750 square yards of pavement with not less than three tests.
C. Fill and Backfill under Pavement and Site Structures:
   1) Maximum Density/Optimum Moisture Content: Perform one test for each soil type.
   2) Field Density and Thickness: Perform one test and thickness measurement for each 500 linear feet of roadway or 750 square yards of pavement with not less than three tests on alternating lifts (12 inch maximum thickness unless specified otherwise).
   3) Gradation: Perform 1 gradation test for each soil type.
D. Utility Trench Fill and Backfill:
   1) Maximum Density/Optimum Moisture Content: Perform one test.
   2) Field Density and Thickness: Perform 1 test and thickness measurement for each 500 linear feet of trench with not less than three tests on alternating lifts (12 inch maximum thickness unless specified otherwise).
   3) Gradation: Perform 1 gradation test for each soil type.
E. Fill and Backfill under Building Areas: Coordinate with building plans/specifications and Geotechnical Engineer. Unless directed otherwise, prove at a minimum the following.
   1) Maximum Density/Optimum Moisture Content: Perform one test for each soil type.
   2) Field Density and Thickness: Perform 1 test and thickness measurement per 2000 sf of floor area, per 3 isolated column footings and per 50 lineal feet of wall footing.
   3) Gradation: Perform 1 gradation test for each soil type.
F. Sanitary Sewer Systems:

1) Line Deflection Test: Perform deflection testing in presence of Engineer, and if required utility provider, using either 95% diameter mandrel or ball testing in accordance with ASTM D3034 and Section 33.85 of the GLUMRB Recommended Standards for Wastewater Facilities. Deflection not to exceed 5%. Perform such supplemental deflection testing as required by utility provider. Perform utility provider required testing in presence of Engineer and utility provider. Utility provider supplemental test method may be visual testing by "flashing", alignment logging videography, a combination of methods, or other method as determined by utility provider. Coordinate requirements with utility provider.
2) Line Leakage: Test lines for leakage as soon as practical. Engineer to observe test.
   (a) Test to be by low-pressure air test in accordance with ASTM C-828 for clay pipe, ASTM C-924 for concrete pipe, and ASTM F-1417 for plastic pipe. Refer to UNI-Bell Recommended Practice for Low-Pressure Air Testing, UNI-B-6. Consult with pipe and appurtenance manufacturer for maximum test pressure for pipe size greater than 30-inches in diameter. Plastic pipe pressure drop limits in accordance with ASTM F-1417 Table 1 as follows.

ASTM F-1417 Table 1 Minimum Specified Time Required for a 1.0 psig Pressure Drop for Size and Length of Pipe Indicated for Q = 0.0015

Pipe Dia., In.	Minimum Time, Min.:Sec.	Length for Minimum Time, Ft.	Time for Longer Length, Sec.	Specification Time for Length (L) Shown Min:Sec 100 Ft.	150 Ft.	200 Ft.	250 Ft.	300 Ft.	350 Ft.	400 Ft.
4	3:46	597	0.380 L	3:46	3:46	3:46	3:46	3:46	3:46	3:46
6	5:40	398	0.854 L	5:40	5:40	5:40	5:40	5:40	5:40	5:42
8	7:34	298	1.520 L	7:34	7:34	7:34	7:34	7:36	8:52	10:08
10	9:26	239	2.374 L	9:26	9:26	9:26	9:53	11:52	13:51	15:49
12	11:20	199	3.418 L	11:20	11:20	11:24	14:15	17:05	19:56	22:47
15	14:10	159	5.342 L	14:10	14:10	17:48	22:15	26:42	31:09	35:36
18	17:00	133	7.692 L	17:00	19:13	25:38	32:03	38:27	44:52	51:16
21	19:50	114	10.470 L	19:50	26:10	34:54	43:37	52:21	61:00	69:48
24	22:40	99	13.674 L	22:47	34:11	45:34	56:58	68:22	79:46	91:10
27	25:30	88	17.306 L	28:51	43:16	57:41	72:07	86:32	100:57	115:22
30	28:20	80	21.366 L	35:37	53:25	71:13	89:02	106:50	124:38	142:26
33	31:10	72	25.852 L	43:05	64:38	86:10	107:43	129:16	150:43	172:21
36	34:00	66	30.768 L	51:17	76:55	102:34	128:12	153:50	179:29	205:07

   (b) Low pressure air testing procedures for other pipe materials to use the pressures and testing times as contained in ASTM C-828 and ASTM C-924 and as determined by pipe manufacturer and approved by Engineer.
   (c) Provide appropriate plugs or end caps, properly braced and capable of withstanding test pressures, at service connections.
3) Manhole Leakage: Test manholes for leakage as soon as practical. Engineer to observe test.
   (a) Test to be by low-pressure air test in accordance with ASTM C-1244.
   (b) Provide appropriate plugs capable of withstanding test pressures at pipe connections with manhole.
   (c) In accordance with ASTM C-1244, test head to be placed at top of manhole in accordance with manufacturer's recommendations.
   (d) Conduct test by placing a vacuum of 10 inches Hg on manhole, close valve on vacuum line of test head, and shut off vacuum pump. Measure time for vacuum to drop to 9 inches Hg. Time shall not exceed the value contained in ASTM C-1244 Table 1, contained below. If test fails, correct as required and retest.

ASTM C-1244 Table 1 Minimum Test Times for Various Manhole Diameters in Seconds

Depth (Ft)	Diameter, In.								
	30	33	36	42	48	54	60	66	72
	Time, Seconds								
8	11	12	14	17	20	23	26	29	33
10	14	15	18	21	25	29	33	36	41
12	17	18	21	25	30	35	39	43	49
14	20	21	25	30	35	41	46	51	57
16	22	24	39	34	40	46	52	58	67
18	25	27	32	38	45	52	59	65	73
20	28	30	35	42	50	53	65	72	81
22	31	33	39	46	55	64	72	79	89
24	33	36	42	51	59	64	78	87	97
26	36	39	46	55	64	75	85	94	105
28	39	42	49	59	69	81	91	101	113
30	42	45	53	63	74	87	98	108	121

4) Storm Sewer Systems:
   (a) For systems or portions of systems to be dedicated to a municipality or third party, perform tests in accordance with entity requirements.
   (b) When requested, perform line deflection test and/or line leakage test in accordance with requirements for sanitary sewer systems.

3.8 INSPECTION REQUIREMENTS

A. General: Following items will be inspected by Engineer upon completion. Contractor to schedule inspections.
   1) Improvements to be dedicated to a municipality or third party may require additional inspections by special parties. Verify inspection requirements with municipality or third party and schedule inspections. Prior to final acceptance, Contractor shall schedule inspection with Engineer and municipality or third party.
B. Graded Areas: Prior to placement of permanent vegetative stabilization, graded areas will be inspected by Engineer.
C. Pavement Areas: Pavement and striping to be inspected by Engineer and Geotechnical Engineer upon completion.
D. Permanent Erosion Control Systems: Upon completion and end of maintenance period for vegetative systems, systems will be inspected by Engineer.
E. Utility Systems: Underground utility work of Division 30 will be subject to a visual inspection by Engineer prior to covering and upon completion of construction.
   1) Prior to final inspection, remove all sediment from structures and pipe and dispose of in an appropriate manner.
F. Sanitary Sewer Systems: Engineer will inspect upon completion.
   1) Videography: When required, provide video of sanitary sewer main in accordance with utility requirements.
G. Storm Sewer Systems: Engineer will inspect upon completion.
   1) Engineer to perform a visual inspection of French drain, exfiltration, or filter system pipes upon placement and prior to covering.
H. Stormwater Retention/Detention Pond and Swale Systems: Systems shall be subject to a visual inspection by the Engineer upon completion of following:
   1) Grading
   2) Vegetative stabilization

3.9 AS-BUILT SURVEY

A. General: Provide Engineer 8 signed and sealed copies of as-built survey or surveys as required herein. Provide digital copy in PDF® format and CAD file in AutoCAD® or Terramodel® format.

1) Preparer to be a Registered Land Surveyor or legal entity authorized to practice under FS 472 with such required financial responsibility to pay claims and costs ancillary to providing service.
2) Comply with Florida Minimum Technical Standards for surveying, FAC 5J-17.
3) For projects involving improvements to be dedicated to a municipality or third party, verify and comply with as-built requirements of receiving party. Requirements included herein to be supplied as a minimum.
4) Portions of the work may be certified to regulatory agencies at different times during the life of the project to comply with permit requirements. Coordinate delivery dates of as-built survey with certification needs. Survey may be provided in separate drawings for different systems to meet permit certification times.
5) Denote drawing as as-built or record drawing.
6) All surveys to be furnished prior to request for final approval and payment. Survey is for benefit of Owner, Engineer, and applicable parties accepting such utilities for maintenance and all said parties to be named on drawing.

B. Survey to include water system, sanitary sewer system, storm sewer system, and stormwater management system in accordance with following requirements. If requested, Engineer will provide a digital base map of project.
1) Drawing to show project baseline, boundaries, or other approved references.
2) Use construction document scale.
3) Orient survey to construction drawing coordinate system.
4) Obtain sufficient field information to verify true alignment/limits of systems and allow future marking of systems.
5) Surveyor may utilize information obtained from Contractor as to size and type of system and components thereof. A disclaimer may be placed on survey stating which information was obtained from Contractor.
6) Provide sufficient detail that all parts of system may be readily identified for comparison to Construction Documents. Show the construction document and as-built condition for elements. Construction document requirement to be shown in parenthesis.
7) Obtain measurements at various times as required during construction when improvements will be inaccessible upon completion.
8) Use construction document elevation datum. Show elevation datum reference. Show site benchmark reference.
9) Reference horizontal locations to project boundaries, baseline, or other approved reference point. Locations to be by bearing and distance, station and offset, or coordinates. Coordinates to use same base reference as construction documents.

C. Water System
1) Show horizontal alignment of water system based on field measurements. Drawing to include following:
(a) Size and type of pipe.
(b) Size and type of all fittings, valves and appurtenances including service lines to and including water meter box and any backflow preventers. Show two offset distances to permanent above ground improvements in addition to boundary ties.
(c) Location of sampling points for bacteriological tests.
2) Provide survey within 30 days of completion of construction of the water system.

D. Sanitary Sewer System
1) Show horizontal and vertical alignment of gravity sanitary system based on field measurements. Drawing to include following:
(a) Structures with same designation used on Construction Documents.
(b) Rim elevation and center invert elevation. Provide separate invert for lines not at structure invert.
(c) Length, size, type, and slope of all gravity sewers.
(d) Location of service lines.
2) Show horizontal and vertical alignment of pumping stations based on field measurements. Drawing to include following:
(a) Pumping stations identified with designation used on Construction Documents

(b) Wet well location, top elevation, diameter, invert elevation and influent invert elevation of gravity sewer line.
(c) Valve Box location and dimensions.
(d) Control Panel location.
(e) Fencing type and location.
(f) Limits of gravel, pavement and location of all other above grade improvements.
(g) Pump station parcel boundary when applicable.

3) Show horizontal alignment of sanitary force main system based on field measurements. Drawing to include following:
(a) Size and type of pipe.
(b) Size and type of all fittings, valves and appurtenances.
(c) Existing structure or point of termination, including vertical information.

4) Provide survey within 30 days of completion of construction of the sanitary sewer system.

E. Stormwater Management System

1) Show horizontal and vertical alignment of stormwater management system based on field measurements. Drawing to include following:
(a) Drainage Structures – Locations, dimensions, and elevations of all with structure type and construction document designation.
(b) Pipe - Length, size, type, and slope of all pipes.
(c) Discharge structures - Locations, dimensions, and elevations of all, including weirs, orifices, gates, pumps, pipes, and oil and grease skimmers with structure type and construction document designation.
(d) Side bank and underdrain filters, or exfiltration trenches - Locations, dimensions, and elevations of all, including clean-outs, pipes, connections to control structures and points of discharge to receiving waters. Show top of pipe elevation and clear distance between pipes within filter beds/trenches at a spacing of 25 feet on-center. Show horizontal limits of filter beds/trenches.
(e) Storage areas for treatment and attenuation - Dimensions, elevations, contours or cross-sections of all, sufficient to determine stage-storage relationships of the storage area and the permanent pool depth and volume below the control elevation for normally wet systems. Provide contour area at top of bank, toe of slope, intermediate break points and any specific elevations shown on construction documents. Extend elevations beyond top of bank as required to obtain overtopping discharge elevation.
(f) System grading - Dimensions, elevations, contours, final grades or cross-sections to determine contributing drainage areas, flow directions, and conveyance of runoff to the system discharge points from the site.
(g) Conveyance - Dimensions, elevations, contours, final grades or cross sections of systems utilized to divert off-site runoff around or through the site.
(h) Water levels - Existing water elevations and measurement date.

1) Provide survey within 30 days of completion of construction of the stormwater management system.

4. MEASUREMENT AND PAYMENT

4.1 GENERAL

A. The contract unit price for pay items shall be compensation in full for furnishing all materials, labor, equipment, tools and incidentals necessary for completion in every detail in accordance with plans and specifications. Payment for each pay item shall be by lump sum or unit price as identified in the contract. Unit price pay items will be paid based on quantities computed as determined by the Engineer. For items with a fixed extent, quantities may be based on the limits of the work as computed based on the engineering plans as determined by the engineer and used in the contract. For items where payment is based on actual measure, the method of measure will be as identified in the specific specification section and as follows. When the work to be measured will be rendered inaccessible by other operations, it is the responsibility of the Contractor to confirm the method of measure and to coordinate with the engineer that work has been satisfactorily measured prior to rendering inaccessible.

Failure on the part of the Contractor to coordinate measurement prior to rendering inaccessible may result in payment based on engineer estimates as contained in the contract, or based on investigative work as determined by the engineer and necessary to measure of the extent of the constructed pay item with the cost of such investigative work born by the Contractor.

4.2 AREAL PAYMENT

A. When payment is on an areal basis, pay quantities shall be areal extent of Work as calculated using limits of work or plane surveying measurements.
   1) Payment shall not include unauthorized areas beyond limits of work.
   2) Quantities shown on proposal form are Engineer's estimate of Work in-place.
   3) Differences in actual measure of material and estimated measure of material shall not constitute a change in scope of Work and therefore, shall not be a basis for change of unit price.
   4) Payment will be based upon limits of work or actual measure times contract unit price.

4.3 VOLUMETRIC PAYMENT

A. When payment is on a volumetric basis, pay quantities shall be computed between original and final position of work, or as defined otherwise herein. Calculation shall be by method of plane surface finite differences, or other method determined by Engineer.
   1) Payment shall not include unauthorized areas beyond limits of work.
   2) Quantities shown on proposal form are Engineer's estimate of Work in-place.
   3) Differences in actual measure of material and estimated measure of material shall not constitute a change in scope of Work and therefore, shall not be a basis for change of unit price.
   4) Payment will be based upon limits of work or actual measure times contract unit price.

4.4 LINEAR MEASURE PAYMENT

A. When payment is on a linear basis, pay quantities shall be length of Work as calculated using limits of work or measured using plane surveying measurements.
   1) Payment shall not include unauthorized areas beyond limits of work.
   2) Quantities shown on proposal form are Engineer's estimate of Work in-place.
   3) Differences in actual measure of material and estimated measure of material shall not constitute a change in scope of Work and therefore, shall not be a basis for change of unit price.
   4) Payment will be based upon limits of work or actual measure times contract unit price.

4.5 LUMP SUM PAYMENT

A. When payment is on a lump sum basis, Engineer estimated in-place quantities of Work may be provided on proposal form for benefit of Contractor. When provided, such quantity is for verifying Contractor's estimate of work and should be considered only as a rough estimate of primary item or items of work. The quantity is not intended as a representation of total work, may exclude certain portions of work, and is not a bid quantity. Contractor shall assume any and all risk associated with utilization of estimate quantity. Variations between actual quantities required to construct item and provided quantity shall not be taken as a basis of claim by Contractor. Contractor shall be responsible for making all measurements and computations necessary to determine quantity of work.

END OF SECTION 30 00 00

THIS PAGE LEFT INTENTIONALLY BLANK

SECTION 31 10 00
SITE PREPARATION

1. GENERAL

1.1 DESCRIPTION OF WORK
A. Includes But Not Limited To:
1) Demolish required existing above and below grade improvements.
2) Prepare site for earthwork and grading including:
(a) Protection of existing trees.
(b) Removal of trees and other vegetation.
(c) Topsoil stripping.
(d) Clearing and/or grubbing.
3) Disposal of all products and debris not required.

1.2 RELATED SECTIONS
A. Section 30 00 00 - General Site Work Requirements
B. Section 31 20 00 - Earthwork
C. Section 31 25 00 - Erosion Control and Environmental Protection

1.3 SUBMITTALS - comply with requirements of Section 30 00 00.

1.4 QUALITY ASSURANCE - comply with requirements of Section 30 00 00.

1.5 JOB CONDITIONS
A. Improvements on Adjoining Property (when applicable)
1) Authority for performing removal and alteration work on property adjoining Owner's property will be obtained by Owner prior to award of contract. Contractor to obtain copy of authorization prior to beginning work.
2) Extent of work on adjacent property is indicated on Drawings.

2. PRODUCTS

2.1 MATERIALS
A. Wood Framing: Posts 4"x4", rails 2"x4", exposed height above grade 4'-0".
B. Construction Fencing: 48" high orange polyethylene fence, such as "E-Z Fence" as manufactured by Sivard Corp., or "Safety Fence" as manufactured by Weathashade or approved equal.
C. Sediment Control Barriers: Refer to Section 31 25 00 - Erosion Control and Environmental Protection

3. EXECUTION

3.1 PROTECTION OF EXISTING IMPROVEMENTS:
A. Protect all existing improvements, public or private, on or adjacent to site, except items indicated for removal.
B. Protect from disturbance or damage all land monuments and property markers.

3.2 PROTECTION OF EXISTING TREES AND VEGETATION
A. Protect against damage existing trees and other vegetation indicated to remain in place.
B. Do not smother trees by stockpiling construction materials or excavated materials within drip line.
C. Do not park within drip line.
D. Provide temporary guards to protect trees and vegetation to remain.
1) Prior to commencing work, construct temporary 4-0" high, double rail, wood fence enclosure a minimum 8'-0" square centered on trees and vegetation to remain. Increase enclosure size as directed on plans for large trees or groups of trees.

2) Maintain fencing during full construction period.
3) Remove fencing when directed by Engineer

E. Interfering branches and roots of trees scheduled to remain may be removed with approval of Engineer.

F. Protect cut and exposed roots:
1) Coat cut faces of roots over 1" in diameter with emulsified asphalt or other coating formulated for use on damaged plant tissues.
2) Temporarily cover exposed roots with wet burlap to prevent roots from drying out; cover with earth as soon as possible.

G. Unauthorized Damage:
1) Work adjacent to or within the drip line of trees does not authorize damage to tree unless tree is shown for removal. Contractor shall protect trees as contained herein. Protection may include alternative construction methods such as boring for utilities or relocation of improvements. Prior to performing work adjacent to or within drip line of any regulated tree, Contractor shall determine location of improvements with respect to tree root system or drip line, assess impacts of work upon trees using appropriate means including the employ of arborists or foresters as necessary. Additionally, Contractor shall determine requirements of regulatory entities for regulated trees prior to performing work. Notify Engineer if work will adversely impact trees.
2) Repair or replace damaged trees and vegetation indicated to remain in a manner acceptable to Engineer. Employ licensed Arborist to repair damage.

H. Water trees and other vegetation to remain within limits of contract work as required to maintain health.

3.3 SITE CLEARING

A. General: Remove trees, shrubs, grass and other vegetation, improvements, or obstructions interfering with installation of new construction in accordance with Section 110, FDOT Standard Specifications.

B. Clearing and/or Grubbing: Clear designated areas of trees, shrubs and other vegetation, except as indicated to be protected.
1) Completely remove buildings, timber, brush, stumps, roots, rubbish, debris, and all other obstructions resting on or protruding through ground surface. Unless noted otherwise, extent of work to be to limits of ROW or, in all other cases, to a distance necessary for construction of improvements, but not less than 2 feet beyond pavement, curb, sidewalk, and site structures and 5 feet beyond building perimeters.
2) Fell trees in a manner to prevent injury to trees scheduled to remain.
3) Remove roots, deleterious matter and other debris to a depth of at least one-foot below existing grade or finished subgrade.
4) Scrape surface to a depth of at least six inches and remove all exposed roots, deleterious matter, and debris to a depth of at least one-foot.
5) Completely remove stumps within the limits of work.
6) Use hand methods for grubbing inside the drip line of trees to remain.
7) Strip grass materials to a maximum depth of 1" under tree canopies and carefully till or scarify existing grade to a depth of 1".
8) Fill depressions caused by clearing and grubbing operations with satisfactory soil material in accordance with Section 31 20 00 Earthwork, unless further excavation or earthwork is indicated.

C. For the purposes of unsuitable material and earthwork quantities, clearing and grubbing will be assumed to remove all soils to a depth of 6 inches below existing grade. These soils will not be included in any computations of unsuitable material quantities.

D. Removal of Improvements: Remove existing above-grade and below-grade improvements necessary to permit indicated work.
1) Remove all abandoned underground piping or conduit, whether known or discovered, located within limits of work unless directed otherwise by Engineer.

3.4 DISPOSAL OF WASTE MATERIALS - comply with requirements of Section 30 00 00

4. MEASUREMENT AND PAYMENT

4.1 GENERAL

A. The contract unit price shall be compensation in full for furnishing all materials, labor, equipment, tools and incidentals necessary for completion in every detail in accordance with plans and specifications.
   1) There will be no separate payment for locating existing utilities and structures, clean-up and restoration of property, or other items under this section unless specifically identified on the proposal, bid form or contract.

END OF SECTION 31 10 00

THIS PAGE LEFT INTENTIONALLY BLANK

SECTION 31 20 00
EARTHWORK

1. GENERAL

1.1 COORDINATION

A. Construction Documents may contain information relating to earthwork operations beneath proposed buildings. Building plans and specifications, prepared by others, may also contain information relating to earthwork operations beneath proposed buildings. Contractor shall exercise extreme care in coordinating information contained within site work plans and specifications with building plans and specifications. Bring discrepancies to attention of Engineer for resolution. Most stringent conditions shall apply unless directed otherwise.

1.2 DESCRIPTION OF WORK

A. Extent of earthwork is indicated on drawings and includes but is not limited to:
   1) Preparation of subgrade for pavements.
   2) Earthwork for roadway and pavements.
   3) Earthwork for site work and structures.
   4) Removal and replacement of unsuitable material.
   5) Earthwork for stormwater system including ditches, channels, swales, detention areas, retention areas, etc.
   6) Earthwork for Utilities: Refer to Section 31 23 16.13, not Work of this section.
   7) Earthwork for buildings and building foundations.

1.3 DEFINITIONS

A. Excavation: Excavation consists of removal of material of whatever nature to subgrade elevations, elevations necessary for deep compaction, construction, or as required, and subsequent disposal or stockpiling.

B. Fill, Backfill, or Embankment: Placement of suitable material to lines and grades shown, or required for construction of improvements, except for backfill of areas of excavated unsuitable material. For purposes of payment, backfill of areas of excavated unsuitable material to be classified under pay item unsuitable material. Embankment is generally described as fill placed above existing grade but may be used generically to describe all fill except as noted above.

C. Unauthorized excavation: Removal of materials beyond indicated lines, grades and cross-sections without specific direction of Engineer.

D. Subbase: A constructed bed of material laid under a road base or pavement base on natural ground surface. Material may consist of fill to bring ground surface to proposed elevations or may consist of a design layer of specific material to provide structural strength to pavement section.

E. Subgrade: The natural ground beneath a road base, pavement base or other structure.
   1) The terms subbase and subgrade may be used generically in certain instances to indicate material beneath a road or pavement base without regard to whether material is naturally occurring or not. It is intent of specifications to make a distinction where a distinction is warranted. However, unless warranted, such a distinction may not be shown.

F. Structures: Site structures including but not limited to endwalls, inlets, junction boxes, site retaining walls, rip-rap, etc., except for buildings and building components.

G. Suitable Soils: Soils suitable for providing required engineering properties beneath or adjacent to proposed work.

H. Unsuitable soils: Soils which are identified as unsuitable for location within limits of work.

I. Unsuitable material: Unsuitable material includes unsuitable soils, waste material, man-made material, trash, debris, or other material as identified by Geotechnical Engineer as unsuitable within limits of work.

J. Standard Minimum Slope: The minimum safe allowable slope (smallest ratio of run divided by rise) of bare suitable material required to support the slope without shear failure (approximately 2 to 1).

1.4 RELATED WORK

A. Section 30 00 00 - General Site Work Requirements

B. Section 31 32 00 - Stabilization
C. Section 32 12 16 - Asphaltic Concrete Pavement

1.5 SUBMITTALS - comply with requirements of Section 30 00 00.

1.6 **QUALITY ASSURANCE -** comply with requirements of Section 30 00 00.

2. PRODUCTS

2.1 SOIL MATERIALS

A. Satisfactory (suitable) soil materials: Materials complying with AASHTO soil classification groups A-1, A-2-4, A-2-5, A-3 and sand to slightly silty sand material with a maximum percentage of fines as specified in the Geotechnical Report, but not more than 15% by dry weight finer than number 200 US mesh sieve. Material to be free of clay, rock or gravel larger than two inches in any dimension, debris, refuse, rubble, organics and other deleterious matter.
   1) Do not use material from on-site sources for placement beneath pavements and structures unless authorized in Geotechnical Report or by Geotechnical Engineer in writing.
B. Unsatisfactory (unsuitable) soil materials: Materials complying with AASHTO soil classification groups A-2-6, A-2-7, A-4, A-5, A-6, A-7 and A-8 or as identified by Geotechnical Engineer.
   1) Unsatisfactory materials include but are not limited to materials containing roots, organics, peat, muck, clay, trash, debris, frozen materials and stones larger than three inches. Unsatisfactory materials may also include manmade fills, refuse or backfills from previous construction.
C. Subbase Material: Unless otherwise noted, naturally or artificially graded mixture of natural or crushed gravel, crushed stone, crushed slag, natural or crushed sand with less than 15% passing No. 200 sieve and a limerock bearing ratio value of at least 50.
D. Drainage Fill: Unless otherwise noted, washed, evenly graded mixture of crushed stone, or crushed or uncrushed gravel, with 100% passing a 1 1/2" sieve and not more than 5% passing a No. 4 sieve.
E. Backfill and Fill Materials: Satisfactory soil materials.

3. EXECUTION

3.1 EXCAVATION

A. General: Excavate to lines, grades and cross-sections indicated and/or necessary to permit indicated work.
B. Unauthorized excavation, as well as remedial Work directed by Engineer, shall be at Contractor's expense.
C. Unsuitable Materials: When unsuitable material is discovered beneath and/or adjacent to limits of work, notify Geotechnical Engineer prior to performing any work in affected area. Geotechnical Engineer shall make a determination on suitability or unsuitability of material remaining beneath proposed improvements. When directed by Geotechnical Engineer, excavate unsuitable materials to lines, grades, and cross sections indicated on plans or as directed. When payment is based on volumetric measure, insure that necessary elevations have been obtained by party responsible for volumetric computation prior to beginning work. In no case shall unsuitable material remain unless directed by Geotechnical Engineer. Any improvements placed upon unsuitable material without written approval may require removal and replacement at no cost to Owner.
   1) Geotechnical Engineer to inspect bottom of excavation and approve removal prior to backfilling.
   2) Beneath pavement areas, depths and widths of removal to be in accordance with details contained in plans or as directed by Geotechnical Engineer.
   3) Beneath building areas, removal, when required, shall be to full depth and for a distance equal to depth of cut beyond work, but not less than 10 feet or as directed by Geotechnical Engineer.
   4) Temporary dewatering may be required during inspection of excavation bottom. Dewater as required.
D. Material Storage: Stockpile satisfactory excavated materials where directed, until required for backfill or fill. Place, grade and shape stockpiles for proper drainage.
   1) Locate and retain soil materials away from edge of excavations. Do not store within drip line of trees indicated to remain.
E. Dispose of excess soil material and waste materials as herein specified.

3.2 STABILITY OF EXCAVATIONS

A. General: Perform operations in accordance with Federal, State, and Local regulations including Trench Safety Act, Florida Statute 553.6.

B. Provide special provisions when required. Failure to provide necessary items and meet requirements of laws shall not relieve Contractor of sole liability for trench safety.
   1) Provide engineering design and certification, when required.
   2) Provide all necessary certifications, cost data, and documentation required by law.
   3) For trench excavations in excess of 5 feet deep, the contract bid submitted by the contractor who will perform such excavation shall include the following.
      (a) A reference to the trench safety standards that will be in effect during the period of construction of the project.
      (b) Written assurance by the contractor performing the trench excavation that such contractor will comply with the applicable trench safety standards.
      (c) A separate item identifying the cost of compliance with the applicable trench safety standards. Submittal of the information shall be on the form contained herein and shall be attached to all bids.
   4) A contractor performing trench excavation shall comply with the following
      (a) As a minimum, comply with the excavation safety standards which are applicable to a project.
      (b) Adhere to any special shoring requirements, if any, of the state or political subdivisions which may be applicable to such a project.
      (c) Consider available geotechnical information in the contractor's design of the trench safety system which it will employ on the project.

C. Slope sides of excavations to comply with codes and ordinances having jurisdiction.
   1) Maintain sides and slopes of excavations in safe condition until completion of backfilling.

D. Shore and brace where sloping is not possible because of space restrictions or stability of material excavated.
   1) Provide materials for shoring and bracing in good serviceable condition.
   2) Establish requirements to comply with codes and authorities having jurisdiction.
   3) Maintain shoring and bracing in excavations regardless of time period excavations will be open. Carry down shoring and bracing as excavation progresses.

3.3 DEWATERING OF EXCAVATIONS

A. General: Prevent surface water from flowing into excavations and from flooding project site and surrounding area. Excavation shall be free from water before placing fill, compaction, or installation of structures.
   1) Establish and maintain temporary drainage ditches and/or diversion structures outside excavation limits to prevent surface water from excavations. Do not use trench excavations as temporary drainage ditches.
   2) Provide all necessary pumps, underdrains, wellpoint systems and other means for removing water from excavations and other parts of work. Continue dewatering operations until backfill has progressed above ground water table.
   3) Dispose of water in such a manner as will not cause injury to public health, to public or private property, to work completed or in progress, to surface of the streets, or cause any interference with use of the same by the public.
   4) Use appropriate erosion and sediment control procedures to prevent siltation or sediment disposal off-site.
   5) Obtain all required dewatering permits.

3.4 BACKFILL, FILL, AND EMBANKMENT

A. General: Backfill, Fill and Embankment Work includes fill to the lines, grades and cross-sections indicated or as required to construct improvements.
   1) Place suitable soil material in layers to required elevation and compaction, for each area classification as contained herein or as shown on the construction drawings.

B. Ground Surface Preparation: Remove vegetation, debris, unsatisfactory soil materials, obstructions and deleterious materials from ground surface prior to placement of fills. Flow, strip or break-up sloped surfaces steeper than one vertical to four horizontal so that fill material will bond with existing surface.

C. When existing ground surface has a density less than that specified under "Compaction" for particular area classification, break up ground surface, pulverize, moisture-condition to optimum moisture

content, and compact to required depth and percentage of maximum density.

D. Placement and Compaction: Place backfill and fill materials in layers not more than 12" in loose depth for material compacted by heavy compaction equipment, and not more than six inches in loose depth for material compacted by hand-operated tampers. Compact each layer to required percentage of maximum dry density or relative dry density for each area classification contained herein or as shown on the construction drawings
   1) Prior to compaction, moisten or aerate each layer as necessary to provide optimum moisture content.
   2) Place evenly adjacent to structures, piping or conduit to required elevations. Take care to prevent wedging action of backfill against structures or displacement of piping or conduit by carrying material uniformly around structure, piping or conduit to approximately same elevation in each lift.
   3) Placement in Unstable Areas: In areas not capable of supporting the weight of hauling equipment, place fill by dumping successive loads in a uniformly distributed layer of a thickness not greater than that necessary to support hauling equipment. Place remainder in accordance with requirements contained herein.
   4) Placement on Steep Slopes: For slopes more than 20 degrees from the horizontal, plow existing grade to cut in steps before filling.
   5) Placement in Pavement Areas: Prior to backfilling, compact bottom of excavation beneath pavement and extending 5 feet beyond perimeter to specified density and depth. Place fill in accordance with requirements contained herein.
   6) Placing in Building Areas: Prior to backfilling, compact bottom of excavation in area beneath building and extending 5 feet beyond perimeter to specified density and depth. Place fill in accordance with requirements contained herein.

E. Unsuitable Material: Upon notification to proceed by Geotechnical Engineer, replace excavated areas of unsuitable material with suitable material in accordance with requirements contained herein and following.
   1) Do not place backfill in standing water.
   2) Maintain dry condition during backfill until level exceeds elevation of ground water table.

F. Backfill excavations as promptly as Work permits, but not until completion of following:
   1) Inspection, testing, approval and recording of locations of underground utilities.
   2) Removal of concrete formwork. No formwork will be allowed to remain in place.
   3) Removal of shoring and bracing, and backfilling of voids with satisfactory materials.
   4) Removal of trash and debris.

3.5 GRADING

A. General: Uniformly grade areas within limits of grading under this section, including adjacent transition areas. Smooth finish surface within specified tolerances, compact with uniform levels or slopes between points where elevations are indicated, or between such points and existing grades.

B. Grading Adjacent to Building: Grade areas adjacent to building lines to drain away from structures and to prevent ponding.

C. Finish surfaces, subgrade or finish grade, free from irregular changes and as follows:
   1) Lawn or Unpaved Areas: Finish areas to receive topsoil to within not more than 0.10' above or below required subgrade elevations.
   2) Walks: Shape surface of areas under walks to line, grade and cross-section, with finish surface not more than 0.05' above or below required subgrade elevation.
   3) Ditches, Channels and Swales: Shape to line, grade and cross-section, with finish surface not more than 0.05' above or below required elevations and such that no water will be impounded unless so indicated on plans.
   4) Detention and Retention Areas: Shape to line, grade and cross-section with finish surface not more than 0.05' above or below required elevations.
   5) Pavements: Shape surface of areas under pavement to line, grade and cross-section, with finish surface not more than 3/8" above or below required subgrade elevation.
   6) Building Areas: Shape surface of areas under building to line, grade and cross-section, with finish surface not more than 1/8" above or below required subgrade elevation.

3.6 COMPACTION

A. General: Control soil compaction during construction providing minimum percentage of density specified for each layer of material for the area classification indicated below or as shown on the construction drawings.

B. Percentage of Maximum Density Requirements: Compact soil to not less than following percentages of Modified Proctor maximum dry density determined in accordance with AASHTO T-180/ASTM D-1557.

1) Drainage Structures: Unless noted otherwise on plans, compact top 12 inches of subgrade and each layer of backfill or fill material to 95% maximum dry density.
2) Pavement: Unless noted otherwise on plans, compact each layer of backfill or fill material to 95% maximum dry density. Compact subgrade to 95% maximum dry density to a depth of 12 inches below grade. Compaction shall be by a vibratory roller. When required, stabilize the top 12 inches of subgrade or subbase in accordance with other Division-30 sections for stabilization.
3) Stormwater System: Unless noted otherwise on plans, compact top eight inches of subgrade and each layer of backfill or fill material to 95% maximum dry density.
4) Lawn or Unpaved Areas: Unless noted otherwise on plans, compact top 8 inches of subgrade and each layer of backfill or fill material to the density of existing soils but not less than 90% of the maximum dry density.
5) Walkways, Slabs, Ditch Pavement and Miscellaneous Structures: Unless noted otherwise on plans, compact each layer of backfill or fill material at 95% maximum dry density. The top 12 inches of subgrade shall be compacted to a minimum of 95% maximum dry density.
6) Buildings and Foundations: Unless noted otherwise, compact each layer of backfill or fill material at 95% maximum dry density. Compact subgrade to 95% maximum dry density to a depth of 12 inches below grade. Compaction shall be by a vibratory roller.

C. Moisture Control: Where subgrade or soil layer must be moisture conditioned before compaction, uniformly apply water to surface of subgrade, or soil layer, to prevent free water appearing on surface during or subsequent to compaction operations. Remove and replace, or scarify and air dry, soil material that is too wet to permit compaction to specified density. Soil material that has been removed because it is too wet to permit compaction may be stockpiled or spread and allowed to dry. Assist drying by discing, harrowing or pulverizing until moisture content is reduced to a satisfactory value.

D. Yielding Areas: Any areas which show signs of yielding during compaction operations shall be brought to attention of Owners Geotechnical Engineer.

3.7 TESTING AND INSPECTION REQUIREMENTS - comply with requirements of Section 30 00 00.

3.8 MAINTENANCE

A. Protection of Graded Areas: Protect newly graded areas from traffic and erosion. Keep free of trash and debris. Erosion control shall be by stabilizing vegetation, either permanent or temporary, placed within five days of grading.

B. Repair and re-establish grades in settled, eroded and rutted areas to specified tolerances.

C. Reconditioning Compacted Areas: Where completed compacted areas are disturbed by subsequent construction operations or adverse weather, scarify surface, re-shape and compact to required density prior to further construction.

D. Settling: Where settling is measurable or observable at excavated areas during general project warranty period, remove surface (pavement, lawn or other finish), add backfill material, compact and replace surface treatment. Restore appearance, quality and condition of surface or finish to match adjacent Work and eliminate evidence of restoration to greatest extent possible.

3.9 DISPOSAL OF EXCESS AND WASTE MATERIALS - Comply with requirements of Section 30 00 00.

4. MEASUREMENT AND PAYMENT

4.1 GENERAL

A. The contract unit price shall be compensation in full for furnishing all materials, labor, equipment, tools and incidentals necessary for completion in every detail in accordance with plans and

specifications.

1) There will be no separate payment for clean up and restoration of property, or other items under this section unless specifically identified on the proposal, bid form or contract.

B. Unsuitable Materials: When payment is on a volumetric basis, contract unit price shall be compensation in full for removal of one cubic yard (in-place measure) of unsuitable material and replacement with one cubic yard (in-place measure) of suitable material, and shall include disposal of unsuitable material as specified herein.

1) Removal of unsuitable material within areas above subgrade shall not be paid for as unsuitable material but shall be considered as normal excavation.
2) Pay quantities shall be based on volume between lowest subgrade elevation (either pre-developed less clearing and grubbing, design or actual) and actual or design bottom of excavation (whichever results in least volume). When subgrade area is pre-developed area less clearing and grubbing, field survey data obtained prior to clearing and grubbing may be used at discretion of Engineer. When used, clearing and grubbing will be assumed to remove all soils to a depth of 6 inches below existing grade. These soils will not be included in computation of quantities.
3) Measurement shall be by Engineer or Owner's Representative in accordance with the methods contained in Section 30 00 00. Contractor shall be responsible for coordinating measurement.
4) Payment shall only include Work to limits, lines and grades shown on plans or directed by Engineer.

END OF SECTION 31 20 00

SECTION 31 23 16
EARTHWORK FOR UTILITIES

1. GENERAL

1.1 DESCRIPTION OF WORK
A. Extent of work is indicated on drawings and includes but is not limited to:
   1) Excavation for utility systems to points of connection or termination.
   2) Trenching for utility systems to points of connection or termination.
   3) Preparation of utility system subgrade and bedding.
   4) Placement of select granular bedding material.
   5) Backfilling for utility systems to points of connection or termination.
   6) Finish grading and stabilization
   7) Removal and replacement of pavement.

1.2 RELATED WORK
A. Section 30 00 00 - General Site Work Requirements
B. Section 31 20 00 - Earthwork
C. Section 31 25 00 - Erosion Control and Environmental Protection
D. Section 32 92 19 - Grassing by Seeding

1.3 DEFINITIONS
A. Pipe Bedding: Pipe bedding is defined as contact between a pipe and soil foundation on which it rests.
B. Unauthorized excavation: Removal of materials beyond indicated lines, grades and cross-sections without specific direction of Engineer.
C. Suitable Soils: Soils suitable for providing required engineering properties beneath or adjacent to proposed work.
D. Unsuitable soils: Soils identified as unsuitable for location within limits of work.
E. Unsuitable material: Unsuitable material includes unsuitable soils, waste material, man-made material, trash, debris, or other material as identified by Geotechnical Engineer as unsuitable within limits of work.

1.4 SUBMITTALS - comply with requirements of Section 30 00 00.

1.5 QUALITY ASSURANCE - comply with requirements of Section 30 00 00.

2. PRODUCTS

2.1 SOIL MATERIALS
A. Satisfactory (suitable) soil materials: Materials complying with AASHTO soil classification groups A-1, A-2-4, A-2-5, A-3 and sand to slightly silty sand material with no more than 15% by dry weight finer than number 200 US mesh sieve. Material to be free of clay, rock or gravel larger than two inches in any dimension, debris, refuse, rubble, organics and other deleterious matter.
   1) Do not use material from on-site sources unless authorized in Geotechnical Report or by Geotechnical Engineer in writing.
B. Unsatisfactory (unsuitable) soil materials: Materials complying with AASHTO soil classification groups A-2-6, A-2-7, A-4, A-5, A-6, A-7 and A-8 or as identified by Geotechnical Engineer.
   1) Unsatisfactory materials include but are not limited to materials containing roots, organics, peat, muck, clay, trash, debris, frozen materials and stones larger than three inches. Unsatisfactory materials also include manmade fills, refuse or backfills from previous construction.
C. Backfill and Fill Materials: Satisfactory soil materials.
D. Unyielding material: Rock and gravely soils with stones greater than three inches.
E. Unstable material: Material too wet to properly support the utility pipe, conduit or appurtenance structure.

F. Select Granular Material: Well-graded sand, gravel, crushed gravel, crushed stone or crushed slag composed of hard, tough and durable particles with not more than 15% by weight of material passing a No. 200 mesh sieve and not less than 95% by weight passing the one inch sieve. The maximum allowable aggregate size shall be two inches or maximum size recommended by pipe manufacturer, whichever is smaller.

3. EXECUTION

3.1 EXCAVATION

A. General: Excavate to lines, grades and cross-sections indicated and/or necessary to permit indicated work.
   1) Includes excavation of pavements and other obstructions visible on ground surface; underground structures utilities and other items indicated to be demolished and removed; together with earth and other materials encountered.
   2) Conduct work in accordance with Section 31 20 00 - Earthwork.
   3) Conduct work in accordance with Section 31 25 00 - Erosion Control and Environmental Protection.

B. Unauthorized excavation, as well as remedial Work directed by Engineer, shall be at Contractors expense.

C. Trench Excavation: Trench width below top of pipe shall not exceed 24 inches plus pipe outside diameter (OD) for pipes of less than 24 inches inside diameter, and shall not exceed 36 inches plus OD for larger sizes.
   1) Where recommended trench widths are exceeded, redesign using stronger pipe or special installation procedures. Cost of redesign and increased cost of pipe or installation procedures shall be borne by Contractor.
   2) When unsuitable material is encountered, notify Engineer for direction prior to performing work.
   3) Side slopes shall vary dependent upon depth, type of soils, and position of surface structures.

D. Trench Grade: Grade uniformly to lines and grades shown on plans less any additional excavation for special bedding.

E. Removal of Unyielding Material: Where unyielding material is encountered in trench bottom, remove material four inches below required grade and replace with suitable material.

F. Removal of Unstable Material: Where unstable material is encountered in trench bottom, remove to 1/4 outside pipe diameter but not less than four inches and replace to proper grade with select granular material.
   1) When required due to fault or neglect of Contractor in his performance of work, resulting material shall be excavated and replaced without additional cost to Owner. When removal of unstable material is required due to presence of unsuitable material, payment shall be as contained herein.

G. Appurtenance Excavation: Excavation for manholes, catch-basins, inlets or similar structures to be at least 12 inches clear between outer structure surfaces and face of excavation or support members or of sufficient size to permit placement and removal of forms for full length and width of structure footings and foundations as shown.
   1) Removal of unstable material shall be as specified above.
   2) Use special care to protect bottom of excavation when concrete or masonry is to be placed in an excavated area. Do not excavate to final grade level until just before concrete or masonry is placed.

H. Material Storage: During excavation, stockpile material satisfactory for backfilling in an orderly manner at a distance from banks of trench sufficient to avoid overloading and to prevent slides or cave-ins.

3.2 STABILITY OF EXCAVATIONS - Comply with requirements of Section 31 20 00.

3.3 DEWATERING OF EXCAVATIONS - Comply with requirements of Section 31 20 00.

3.4 BOTTOM PREPARATION

A. Bottom Preparation: Accurately shape to provide uniform, stable bedding of pipe.

1) Adjust line and grade by scraping away or adding adequately compacted material under pipe. Wedges, blocks, or beating on pipe is prohibited.

3.5 PIPE BEDDING

A. General: Bed pipe to provide uniform bearing and support for bottom quadrant of each section of pipe.
   1) Remove point bearing stones, stumps, limbs, or other debris larger than 2 inches in any dimension, or as recommended by the pipe manufacturer, whichever is smaller.
   2) Excavate bell holes to necessary size at each joint or coupling to eliminate point bearing.
   3) Provide stable pipe support and bottom reaction of barrel.

B. Select one of following bedding classes to obtain a stable support for pipe.
   1) Class B (First Class Bedding): Class B bedding may be achieved by either of following methods.
      (a) Shaped Bottom with Tamped Backfill - Shape bottom to conform to a cylindrical surface with a radius of at least 2 inches greater than radius to outside of pipe and with a width sufficient to allow six-tenths of width of pipe barrel to be bedded in fine granular fill placed in shaped excavation. Carefully place and compact backfill at sides of pipe to a thickness of at least 12 inches above top of pipe.

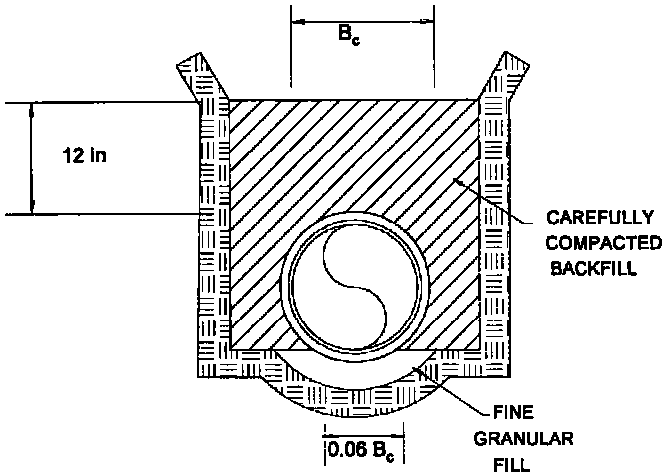

SHAPED BOTTOM WITH TAMPED BACKFILL

CLASS B(1)

(b) Compacted Granular Bedding with Tamped Backfill - Bed pipe in compacted granular material placed on a flat trench bottom. The granular bedding shall have a minimum thickness of one fourth outside pipe diameter and shall extend halfway up pipe barrel at sides. Carefully backfill and compact material to a minimum depth of 12 inches over top of pipe.

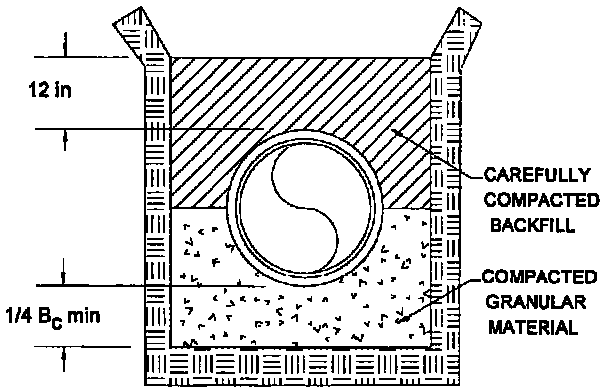

COMPACTED GRANULAR BEDDING

CLASS B(2)

2) Class C (Ordinary Bedding): Class C bedding may be achieved by either of the following methods.
   (a) Shaped Bottom - Bed pipe with ordinary" care in an earth foundation formed in trench bottom by a shaped excavation to fit pipe barrel with reasonable closeness for a width of at least 50 percent of outside pipe diameter. Fill sides and area over pipe to a minimum depth of 6 inches above top of pipe with lightly compacted fill.

   (b) Compacted Granular Bedding with a Tamped Backfill - Bed pipe in compacted granular material placed on a flat trench bottom. The granular bedding shall have a minimum thickness of 4 inches under barrel and extend one-tenth to one-sixth of outside diameter up pipe barrel at sides. Fill remainder of sides and to a minimum depth of 6 inches over top of pipe with lightly compacted backfill.

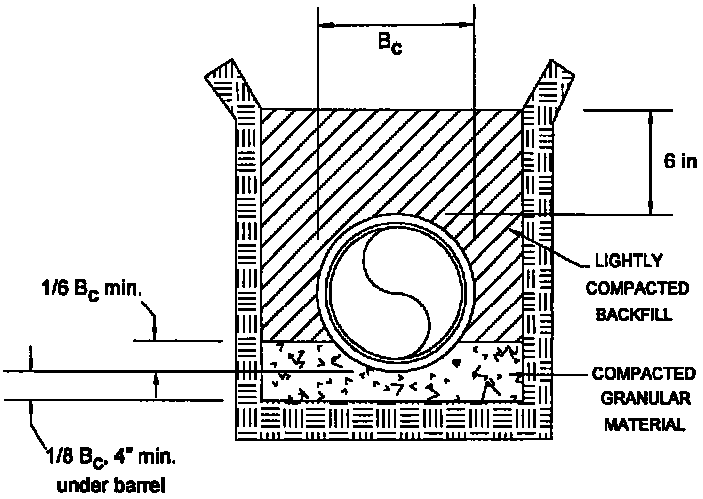

GRANULAR BEDDING

CLASS C(2)

3.6 BACKFILLING

A. General: Backfilling shall be accomplished in three zones, haunching, initial backfill and final backfill for each area classification.

B. Trench Backfill: Backfill to grade shown.
   1) Backfill to two feet above top of pipe prior to performing pressure tests.
   2) Do not place backfill in standing water.
   3) Maintain dry condition during backfill until level exceeds elevation of ground water table.

C. Compaction: Compact fill layers to minimum percentage of maximum dry density in accordance with AASHTO T-1 80 for each area classification and zone as indicated below.
   1) Obtain proper moisture content in soils prior to compaction by wetting or drying as required.

D. Haunching .Carefully place and compact backfill material in thin level lifts not to exceed 4 inches under pipe haunch and to springline (midpoint) of pipe to provide side support.
   1) Prevent vertical and lateral displacement of pipe from proper alignment.
   2) Compact soils using hand operated tamping devices or other methods to 95 percent of maximum dry density in accordance with AASHTO T-180.
   3) Ensure thorough compaction of fill under haunches of pipe.

E. Initial Backfill: Carefully place and compact backfill material in thin level lifts not to exceed 6 inches in thickness from springline to a height of at least one foot above pipe.
   1) Place fill evenly on both sides of pipe for full length of pipe.
   2) Compact soils using hand operated tamping devices or other methods to 95 percent of maximum dry density in accordance with AASHTO T-180.
   3) Ensure thorough compaction of the fill.

F. Final Backfill: Backfill remainder of the trench, except beneath pavement, structures, or other items as specified herein, with native satisfactory material placed in thin level lifts not to exceed 12 inches in thickness and compacted to 90 percent of maximum dry density in accordance with AASHTO T-180.

1) Place fill from top of initial backfill to lines and grades shown on construction documents or existing grade but not less than 12 inches clear.

G. Final Backfill under Roadways and Structures: Place suitable soils, either native or borrow, in thin level lifts not to exceed 12 inches in thickness and compact to 95 percent of maximum dry density in accordance with AASHTO T180.
   1) Place fill from top of initial backfill to bottom of base or existing grade.
   2) For utilities installed after subgrade preparation, prepare subgrade in accordance with requirements for pavement section at no additional compensation.
   3) Do not use unsuitable soils.

H. Final Backfill under Appurtenances: After manhole, catch-basin, inlet or similar structure has been constructed and concrete has been allowed to cure for three days minimum, place fill in manner that structure will not be damaged by shock of falling earth.
   1) Deposit and compact material as specified for final backfill or final backfill under roadways and structures, and place in manner to prevent eccentric loading and excessive stress on structure.

I. Unsuitable Material: In locations where native material is unsuitable soils, notify Engineer for directions prior to backfill operations. Final backfill shall consist of native unsuitable soils or suitable soils as directed by Engineer. Replacement of native unsuitable soils with suitable soils shall be paid for as specified herein, except, in locations where removal and replacement of unsuitable soils is covered and paid for under other sections no additional compensation will be due.

3.7 FINISHING

A. Areas outside limits of other work: Finish grade disturbed areas to provide a smooth, uniform and attractive surface free of exposed roots and debris and then stabilize in accordance with Section 32 92 19 -Grassing by Seeding or repair pavement in accordance with details contained on drawings or to match existing.

3.8 DISPOSAL OF EXCESS AND WASTE MATERIALS - Comply with requirements of Section 30 00 00.

3.9 TESTING AND INSPECTION REQUIREMENTS - comply with requirements of Section 30 00 00.

4. MEASUREMENT AND PAYMENT

4.1 GENERAL

A. The contract unit price shall be compensation in full for furnishing all materials, labor, equipment, tools and incidentals necessary for completion in every detail in accordance with plans and specifications.
   1) There will be no separate payment for work covered by this section except as contained herein, and all costs in connection therewith shall be included in the contract price for item or structure to which it pertains.
   2) Bedding: No separate payment will be made for this item.
   3) Replacement of unsuitable or unstable material with suitable material in the bedding, haunching and initial backfill areas: No separate payment will be made for this item.
   4) Unsuitable materials in the final backfill zone: The contract unit price shall be compensation in full for one cubic yard, in-place, of suitable fill material. Measurement shall be as computed by the Engineer. When a separate unit price is not available for this item, at discretion of Engineer, a unit price equal to one-half unit price for removal and replacement of unsuitable material will be used.

END OF SECTION 31 23 16

SECTION 31 23 16
EARTHWORK FOR UTILITIES

1. GENERAL

1.1 DESCRIPTION OF WORK
A. Extent of work is indicated on drawings and includes but is not limited to:
   1) Excavation for utility systems to points of connection or termination.
   2) Trenching for utility systems to points of connection or termination.
   3) Preparation of utility system subgrade and bedding.
   4) Placement of select granular bedding material.
   5) Backfilling for utility systems to points of connection or termination.
   6) Finish grading and stabilization
   7) Removal and replacement of pavement.

1.2 RELATED WORK
A. Section 30 00 00 - General Site Work Requirements
B. Section 31 20 00 - Earthwork
C. Section 31 25 00 - Erosion Control and Environmental Protection
D. Section 32 92 19 - Grassing by Seeding

1.3 DEFINITIONS
A. Pipe Bedding: Pipe bedding is defined as contact between a pipe and soil foundation on which it rests.
B. Unauthorized excavation: Removal of materials beyond indicated lines, grades and cross-sections without specific direction of Engineer.
C. Suitable Soils: Soils suitable for providing required engineering properties beneath or adjacent to proposed work.
D. Unsuitable soils: Soils identified as unsuitable for location within limits of work.
E. Unsuitable material: Unsuitable material includes unsuitable soils, waste material, man-made material, trash, debris, or other material as identified by Geotechnical Engineer as unsuitable within limits of work.

1.4 SUBMITTALS - comply with requirements of Section 30 00 00.

1.5 QUALITY ASSURANCE - comply with requirements of Section 30 00 00.

2. PRODUCTS

2.1 SOIL MATERIALS
A. Satisfactory (suitable) soil materials: Materials complying with AASHTO soil classification groups A-1, A-2-4, A-2-5, A-3 and sand to slightly silty sand material with no more than 15% by dry weight finer than number 200 US mesh sieve. Material to be free of clay, rock or gravel larger than two inches in any dimension, debris, refuse, rubble, organics and other deleterious matter.
   1) Do not use material from on-site sources unless authorized in Geotechnical Report or by Geotechnical Engineer in writing.
B. Unsatisfactory (unsuitable) soil materials: Materials complying with AASHTO soil classification groups A-2-6, A-2-7, A-4, A-5, A-6, A-7 and A-8 or as identified by Geotechnical Engineer.
   1) Unsatisfactory materials include but are not limited to materials containing roots, organics, peat, muck, clay, trash, debris, frozen materials and stones larger than three inches. Unsatisfactory materials also include manmade fills, refuse or backfills from previous construction.
C. Backfill and Fill Materials: Satisfactory soil materials.
D. Unyielding material: Rock and gravely soils with stones greater than three inches.
E. Unstable material: Material too wet to properly support the utility pipe, conduit or appurtenance structure.

F. Select Granular Material: Well-graded sand, gravel, crushed gravel, crushed stone or crushed slag composed of hard, tough and durable particles with not more than 15% by weight of material passing a No. 200 mesh sieve and not less than 95% by weight passing the one inch sieve. The maximum allowable aggregate size shall be two inches or maximum size recommended by pipe manufacturer, whichever is smaller.

3. EXECUTION

3.1 EXCAVATION

A. General: Excavate to lines, grades and cross-sections indicated and/or necessary to permit indicated work.
   1) Includes excavation of pavements and other obstructions visible on ground surface; underground structures utilities and other items indicated to be demolished and removed; together with earth and other materials encountered.
   2) Conduct work in accordance with Section 31 20 00 - Earthwork.
   3) Conduct work in accordance with Section 31 25 00 - Erosion Control and Environmental Protection.

B. Unauthorized excavation, as well as remedial Work directed by Engineer, shall be at Contractors expense.

C. Trench Excavation: Trench width below top of pipe shall not exceed 24 inches plus pipe outside diameter (OD) for pipes of less than 24 inches inside diameter, and shall not exceed 36 inches plus OD for larger sizes.
   1) Where recommended trench widths are exceeded, redesign using stronger pipe or special installation procedures. Cost of redesign and increased cost of pipe or installation procedures shall be borne by Contractor.
   2) When unsuitable material is encountered, notify Engineer for direction prior to performing work.
   3) Side slopes shall vary dependent upon depth, type of soils, and position of surface structures.

D. Trench Grade: Grade uniformly to lines and grades shown on plans less any additional excavation for special bedding.

E. Removal of Unyielding Material: Where unyielding material is encountered in trench bottom, remove material four inches below required grade and replace with suitable material.

F. Removal of Unstable Material: Where unstable material is encountered in trench bottom, remove to 1/4 outside pipe diameter but not less than four inches and replace to proper grade with select granular material.
   1) When required due to fault or neglect of Contractor in his performance of work, resulting material shall be excavated and replaced without additional cost to Owner. When removal of unstable material is required due to presence of unsuitable material, payment shall be as contained herein.

G. Appurtenance Excavation: Excavation for manholes, catch-basins, inlets or similar structures to be at least 12 inches clear between outer structure surfaces and face of excavation or support members or of sufficient size to permit placement and removal of forms for full length and width of structure footings and foundations as shown.
   1) Removal of unstable material shall be as specified above.
   2) Use special care to protect bottom of excavation when concrete or masonry is to be placed in an excavated area. Do not excavate to final grade level until just before concrete or masonry is placed.

H. Material Storage: During excavation, stockpile material satisfactory for backfilling in an orderly manner at a distance from banks of trench sufficient to avoid overloading and to prevent slides or cave-ins.

3.2 STABILITY OF EXCAVATIONS - Comply with requirements of Section 31 20 00.

3.3 DEWATERING OF EXCAVATIONS - Comply with requirements of Section 31 20 00.

3.4 BOTTOM PREPARATION

A. Bottom Preparation: Accurately shape to provide uniform, stable bedding of pipe.

1) Adjust line and grade by scraping away or adding adequately compacted material under pipe. Wedges, blocks, or beating on pipe is prohibited.

3.5 PIPE BEDDING

A. General: Bed pipe to provide uniform bearing and support for bottom quadrant of each section of pipe.
   1) Remove point bearing stones, stumps, limbs, or other debris larger than 2 inches in any dimension, or as recommended by the pipe manufacturer, whichever is smaller.
   2) Excavate bell holes to necessary size at each joint or coupling to eliminate point bearing.
   3) Provide stable pipe support and bottom reaction of barrel.

B. Select one of following bedding classes to obtain a stable support for pipe.
   1) Class B (First Class Bedding): Class B bedding may be achieved by either of following methods.
      (a) Shaped Bottom with Tamped Backfill - Shape bottom to conform to a cylindrical surface with a radius of at least 2 inches greater than radius to outside of pipe and with a width sufficient to allow six-tenths of width of pipe barrel to be bedded in fine granular fill placed in shaped excavation. Carefully place and compact backfill at sides of pipe to a thickness of at least 12 inches above top of pipe.

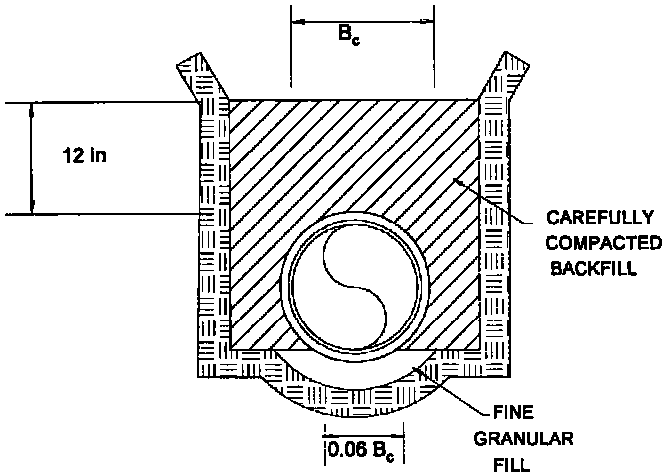

SHAPED BOTTOM WITH TAMPED BACKFILL

CLASS B(1)

(b) Compacted Granular Bedding with Tamped Backfill - Bed pipe in compacted granular material placed on a flat trench bottom. The granular bedding shall have a minimum thickness of one fourth outside pipe diameter and shall extend halfway up pipe barrel at sides. Carefully backfill and compact material to a minimum depth of 12 inches over top of pipe.

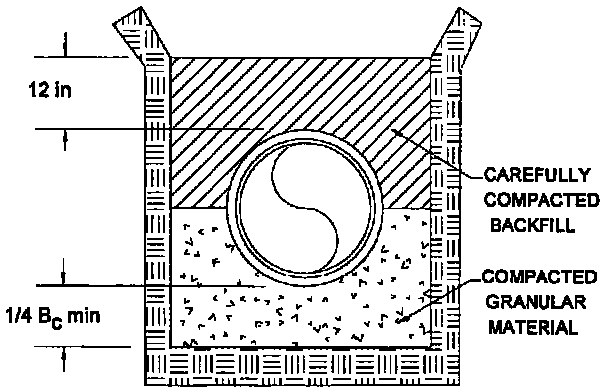

COMPACTED GRANULAR BEDDING

CLASS B(2)

2) Class C (Ordinary Bedding): Class C bedding may be achieved by either of the following methods.
   (a) Shaped Bottom - Bed pipe with ordinary" care in an earth foundation formed in trench bottom by a shaped excavation to fit pipe barrel with reasonable closeness for a width of at least 50 percent of outside pipe diameter. Fill sides and area over pipe to a minimum depth of 6 inches above top of pipe with lightly compacted fill.

   (b) Compacted Granular Bedding with a Tamped Backfill - Bed pipe in compacted granular material placed on a flat trench bottom. The granular bedding shall have a minimum thickness of 4 inches under barrel and extend one-tenth to one-sixth of outside diameter up pipe barrel at sides. Fill remainder of sides and to a minimum depth of 6 inches over top of pipe with lightly compacted backfill.

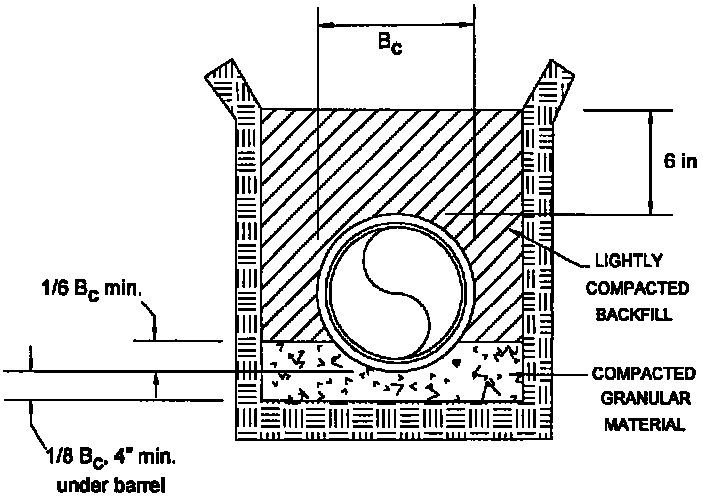

GRANULAR BEDDING

CLASS C(2)

3.6 BACKFILLING

A. General: Backfilling shall be accomplished in three zones, haunching, initial backfill and final backfill for each area classification.

B. Trench Backfill: Backfill to grade shown.
   1) Backfill to two feet above top of pipe prior to performing pressure tests.
   2) Do not place backfill in standing water.
   3) Maintain dry condition during backfill until level exceeds elevation of ground water table.

C. Compaction: Compact fill layers to minimum percentage of maximum dry density in accordance with AASHTO T-1 80 for each area classification and zone as indicated below.
   1) Obtain proper moisture content in soils prior to compaction by wetting or drying as required.

D. Haunching .Carefully place and compact backfill material in thin level lifts not to exceed 4 inches under pipe haunch and to springline (midpoint) of pipe to provide side support.
   1) Prevent vertical and lateral displacement of pipe from proper alignment.
   2) Compact soils using hand operated tamping devices or other methods to 95 percent of maximum dry density in accordance with AASHTO T-180.
   3) Ensure thorough compaction of fill under haunches of pipe.

E. Initial Backfill: Carefully place and compact backfill material in thin level lifts not to exceed 6 inches in thickness from springline to a height of at least one foot above pipe.
   1) Place fill evenly on both sides of pipe for full length of pipe.
   2) Compact soils using hand operated tamping devices or other methods to 95 percent of maximum dry density in accordance with AASHTO T-180.
   3) Ensure thorough compaction of the fill.

F. Final Backfill: Backfill remainder of the trench, except beneath pavement, structures, or other items as specified herein, with native satisfactory material placed in thin level lifts not to exceed 12 inches in thickness and compacted to 90 percent of maximum dry density in accordance with AASHTO T-180.

1) Place fill from top of initial backfill to lines and grades shown on construction documents or existing grade but not less than 12 inches clear.

G. Final Backfill under Roadways and Structures: Place suitable soils, either native or borrow, in thin level lifts not to exceed 12 inches in thickness and compact to 95 percent of maximum dry density in accordance with AASHTO T180.
   1) Place fill from top of initial backfill to bottom of base or existing grade.
   2) For utilities installed after subgrade preparation, prepare subgrade in accordance with requirements for pavement section at no additional compensation.
   3) Do not use unsuitable soils.

H. Final Backfill under Appurtenances: After manhole, catch-basin, inlet or similar structure has been constructed and concrete has been allowed to cure for three days minimum, place fill in manner that structure will not be damaged by shock of falling earth.
   1) Deposit and compact material as specified for final backfill or final backfill under roadways and structures, and place in manner to prevent eccentric loading and excessive stress on structure.

I. Unsuitable Material: In locations where native material is unsuitable soils, notify Engineer for directions prior to backfill operations. Final backfill shall consist of native unsuitable soils or suitable soils as directed by Engineer. Replacement of native unsuitable soils with suitable soils shall be paid for as specified herein, except, in locations where removal and replacement of unsuitable soils is covered and paid for under other sections no additional compensation will be due.

3.7 FINISHING

A. Areas outside limits of other work: Finish grade disturbed areas to provide a smooth, uniform and attractive surface free of exposed roots and debris and then stabilize in accordance with Section 32 92 19 -Grassing by Seeding or repair pavement in accordance with details contained on drawings or to match existing.

3.8 DISPOSAL OF EXCESS AND WASTE MATERIALS - Comply with requirements of Section 30 00 00.

3.9 TESTING AND INSPECTION REQUIREMENTS - comply with requirements of Section 30 00 00.

4. MEASUREMENT AND PAYMENT

4.1 GENERAL

A. The contract unit price shall be compensation in full for furnishing all materials, labor, equipment, tools and incidentals necessary for completion in every detail in accordance with plans and specifications.
   1) There will be no separate payment for work covered by this section except as contained herein, and all costs in connection therewith shall be included in the contract price for item or structure to which it pertains.
   2) Bedding: No separate payment will be made for this item.
   3) Replacement of unsuitable or unstable material with suitable material in the bedding, haunching and initial backfill areas: No separate payment will be made for this item.
   4) Unsuitable materials in the final backfill zone: The contract unit price shall be compensation in full for one cubic yard, in-place, of suitable fill material. Measurement shall be as computed by the Engineer. When a separate unit price is not available for this item, at discretion of Engineer, a unit price equal to one-half unit price for removal and replacement of unsuitable material will be used.

END OF SECTION 31 23 16

SECTION 313116 - TERMITE CONTROL

PART 1 - GENERAL

1.1 SUMMARY

A. Section Includes:

1. Soil treatment with termiticide..

1.2 ACTION SUBMITTALS

A. Product Data: For each type of product indicated. Include the EPA-Registered Label for termiticide products.

1.3 INFORMATIONAL SUBMITTALS

A. Product certificates.

B. Soil Treatment Application Report: Include the following:

1. Date and time of application.
2. Moisture content of soil before application.
3. Termiticide brand name and manufacturer.
4. Quantity of undiluted termiticide used.
5. Dilutions, methods, volumes used, and rates of application.
6. Areas of application.
7. Water source for application.

C. Warranties: Sample of special warranties.

1.4 QUALITY ASSURANCE

A. Installer Qualifications: A specialist who is licensed according to regulations of authorities having jurisdiction to apply termite control treatment and products in jurisdiction where Project is located and who employs workers trained and approved by manufacturer to install manufacturer's products.

B. Regulatory Requirements: Formulate and apply termiticides and termiticide devices according to the EPA-Registered Label.

1.5 PROJECT CONDITIONS

A. Environmental Limitations: To ensure penetration, do not treat soil that is water saturated or frozen. Do not treat soil while precipitation is occurring. Comply with requirements of the EPA-Registered Label and requirements of authorities having jurisdiction.

B. Coordinate soil treatment application with excavating, filling, grading, and concreting operations. Treat soil under footings, grade beams, and ground-supported slabs before construction.

1.6 WARRANTY

A. Soil Treatment Special Warranty: Manufacturer's standard form, signed by Applicator and Contractor, certifying that termite control work, consisting of applied soil termiticide treatment, will prevent infestation of subterranean termites. If subterranean termite activity or damage is discovered during warranty period, re-treat soil and repair or replace damage caused by termite infestation.

1. Warranty Period: Three years from date of Substantial Completion.

1.7 MAINTENANCE SERVICE

A. Continuing Service: Beginning at Substantial Completion, provide 12 months'continuing service including monitoring, inspection, and re-treatment for occurrences of termite activity. Provide a standard continuing service agreement. State services, obligations, conditions, terms for agreement period, and terms for future renewal options.

PART 2 - PRODUCTS

2.1 SOIL TREATMENT

A. Termiticide: Provide an Registered termiticide, complying with requirements of authorities having jurisdiction,including the FLORIDA DEPARTMENT OF AGRICULTURE AND CONSUMER SERVICES in compliance with Florida Statues, Chapter 487, in an aqueous solution formulated to prevent termite infestation. Provide quantity required for application at the label volume and rate for the maximum termiticide concentration allowed for each specific use, according to product's EPA-Registered Label.

1. Products: As listed on the Florida Department of Agriculture and Consumer Services website.

   http://www.flaes.org/pdf/termiticidesregisteredinflorida.pdf

2. Service Life of Treatment: Soil treatment termiticide that is effective for not less than three years against infestation of subterranean termites.

PART 3 - EXECUTION

3.1 APPLICATION, GENERAL

A. General: Comply with the most stringent requirements of authorities having jurisdiction and with manufacturer's EPA-Registered Label for products.

3.2 APPLYING SOIL TREATMENT

A. Examine substrates, areas, and conditions, with Applicator present, for compliance with requirements for[moisture content of soil per termiticide label requirements,] interfaces with earthwork, slab and foundation work, landscaping, utility installation, and other conditions affecting performance of termite control.

B. Proceed with application only after unsatisfactory conditions have been corrected.

C. Soil Treatment Preparation: Remove foreign matter and impermeable soil materials that could decrease treatment effectiveness on areas to be treated. Loosen, rake, and level soil to be treated except previously compacted areas under slabs and footings. Termiticides may be applied before placing compacted fill under slabs if recommended in writing by termiticide manufacturer.

1. Fit filling hose connected to water source at the site with a backflow preventer, complying with requirements of authorities having jurisdiction.

D. Application: Mix soil treatment termiticide solution to a uniform consistency. Provide quantity required for application at the label volume and rate for the maximum specified concentration of termiticide, according to manufacturer's EPA-Registered Label, to the following so that a continuous horizontal and vertical termiticidal barrier or treated zone is established around and under building construction. Distribute treatment evenly.

1. Slabs-on-Grade and Basement Slabs: Under ground-supported slab construction, including footings, building slabs, and attached slabs as an overall treatment. Treat soil materials before concrete footings and slabs are placed.
2. Foundations: Adjacent soil, including soil along the entire inside perimeter of foundation walls; along both sides of interior partition walls; around plumbing pipes and electric conduit penetrating the slab; around interior column footers, piers, and chimney bases; and along the entire outside perimeter, from grade to bottom of footing. Avoid soil washout around footings.
3. Masonry: Treat voids.
4. Penetrations: At expansion joints, control joints, and areas where slabs will be penetrated.

E. Avoid disturbance of treated soil after application. Keep off treated areas until completely dry.

F. Protect termiticide solution, dispersed in treated soils and fills, from being diluted until ground-supported slabs are installed. Use waterproof barrier according to EPA-Registered Label instructions.

G. Post warning signs in areas of application.

H. Reapply soil treatment solution to areas disturbed by subsequent excavation, grading, landscaping, or other construction activities following application.

END OF SECTION 313116

THIS PAGE LEFT INTENTIONALLY BLANK

SECTION 32 05 23
CONCRETE FOR SITE WORK

1. GENERAL

1.1 DESCRIPTION OF WORK
A. The work included under this Section consists of furnishing all materials, forms, transportation and equipment, and performing all necessary labor to construct plain and reinforced concrete items shown or indicated on the Civil Drawings, specified in applicable Division-30 specifications, or incidental to proper execution of site work.

1.2 RELATED WORK
A. Section 30 00 00 - General Site Work Requirements.
B. Section 31 20 00 - Earthwork.
C. Section 31 23 16.13 - Earthwork for Utilities.
D. Section 32 13 13 - Concrete Walks, Curbs, Gutters, and Pavement.

1.3 REFERENCES
A. FDOT Section 345
B. ACI 301 “Specifications for Structural Concrete for Buildings”
C. ACI 318 “Building Code Requirements for Reinforced Concrete”
D. Concrete Reinforcing Steel Institute, “Manual of Standard Practice”

1.4 SUBMITTALS .comply with requirements of Section 30 00 00

1.5 QUALITY ASSURANCE .comply with requirements of Section 30 00 00.

2. PRODUCTS

2.1 FORM MATERIALS
A. Forms for Exposed Finish Concrete: Construct with plywood, metal, metal-framed plywood-faced, or other acceptable panel-type materials, to provide continuous, straight, smooth, exposed surfaces.
   1) Furnish in largest practicable sizes to minimize number of joints.
   2) Provide sufficient strength to withstand all pressures due to newly placed concrete and temperature changes.
B. Forms for Unexposed Finish Concrete: Form concrete surfaces, which will be unexposed in finished structures, with plywood, lumber, metal or other acceptable material.
C. Provide lumber dressed on at least two edges and one side for tight fit.
D. Form Coatings: Provide commercial formulation form-coating compounds that will not bond with, stain, nor adversely affect concrete surfaces, and will not impair subsequent treatments of concrete surfaces requiring bond or adhesion, nor impede wetting of surfaces to be cured with water or curing compound.

2.2 REINFORCING MATERIALS
A. Reinforcing Bar (Rebar): ASTM A 615 of domestic source and manufacture.
   1) Provide Grade 60, except where otherwise shown, for bar numbers 3 to 18.
B. Steel Wire: ASTM A82, plain, cold-drawn, steel.
C. Welded Wire Fabric (WWF): ASTM A 185, welded steel wire fabric.
D. Supports for Reinforcement: Provide supports for reinforcement including bolsters, chairs, spacers and other devices for spacing, supporting and fastening reinforcing bars and welded wire fabric in place.
   1) Use wire bar type supports complying with CRSI recommendations, unless otherwise specified.
   2) Wood, brick and other devices will not be acceptable.
E. For exposed-to-view concrete surfaces, where legs of supports are in contact with forms, provide supports with legs that are hot-dip galvanized, or plastic protected, or stainless steel protected.

2.3 CONCRETE MATERIALS

A. Portland Cement: ASTM C 150.
   1) Type I Cement - Unless otherwise specified.
   2) Type II Cement-For construction of sanitary sewer manholes, wetwells, and pump stations.
B. Use only one brand of cement throughout project, unless otherwise acceptable to Engineer.
   1) Fly ash will not be permitted in lieu of cement.
C. Aggregates: ASTM C33, and as herein specified.
   1) Provide aggregates from a single source for all exposed concrete.
   2) Local aggregates not complying but shown by special test or service to produce concrete of adequate strength and durability may be used when acceptable to Engineer.
D. Maximum Aggregate Size: Not larger than one-fifth of narrowest dimension between sides of forms, one-third of depth of slabs, nor three-fourths of minimum clear spacing between individual reinforcing bars or bundles of bars.
E. Fine Aggregate: Conform to the requirements of FDOT Section 902.
F. Coarse Aggregate: Conform to the requirements of FDOT Section 901.
   1) Slag is not allowed.
   2) Gradation shall be grade 5 or grade 9 as approved by Engineer.
G. Water: From a potable water supply, fresh, clean and free from injurious amounts of oil, acid, alkali or organic matter.
H. Admixtures: Admixtures shall not be used except by specific approval of Engineer.
I. Grout: Material for grouting column base plates, anchor bolts, reinforcing bars, pipe sleeves and pump base plates shall be premixed non-shrink type equal to Sauereisen F-100 Level-Fill grout.
   1) Mix and place as recommended by the manufacturer.
   2) Machinery set on grout pads shall not be operated until grout has cured for at least 24 hours.
J. Grout for pointing and patching shall consist of cement and fine aggregate mixed in proportions used in concrete and a minimum amount of water to produce a workable grout.

2.4 CLASSIFICATION AND STRENGTH OF CONCRETE

A. Class and Minimum Strength Requirements: Unless noted otherwise on plans or in applicable Division-30 specifications, class and minimum strength requirements for concrete shall be as tabulated below.
   1) Use Class B concrete unless noted otherwise.
B. Strength Requirements: Class and strength to meet minimum compressive strength requirements at age of 7 and 28 days as shown in following table. Compressive strengths to be determined by standard laboratory cylinder tests in accordance with ASTM C 31 and C 39.

COMPRESSIVE STRENGTH IN POUNDS PER SQUARE INCH:

Class	For Design Purposes	Cylinder Strength 7 Days	Cylinder Strength 28 Days
A	4,000	2,500	3,700
B	3,200	1,800	3,000
C	2,700	1,500	2,500

2.5 PROPERTIES AND DESIGN OF CONCRETE MIX

A. Water Cement Contents and Slumps: Use lowest slump possible consistent with placement. Use low slump concrete for footings, curb, curb and gutter, sidewalks and slabs on grade. Use medium slump concrete for walls, columns and suspended slabs. Do not use maximum slump concrete except by permission of Engineer. Concrete shall conform to limits specified in following schedule:

CLASS OF CONCRETE

CLASS	A	B	C
Minimum Cement Content Bags Per Cubic Yard:	6.5	5.25	4.5
Maximum Water/Cement Ratio Gallons Per Bag:	6.5	7	7.75
Maximum Slump:	>5”	>5”	>6”
Medium Slump:	4”-5”	4”-5”	5”-6”
Minimum Slump:	2”-3”	0-3"**	3-4"

** - Zero slump concrete is allowed for slip-form payers only.

2.6 CONCRETE MIXING

A. Equipment: Ready-mix with equipment conforming to applicable requirements of ASTM C 94.

B. Measurement: Provide equipment necessary to positively determine and control actual amounts of all materials entering concrete. Measure materials by weight, except water may be measured by volume.

1) One bag of cement will be considered as 94 pounds in weight.

3. EXECUTION

3.1 CONCRETE GENERAL:

A. Secure reinforcement in position for inspection and approval before placing concrete.

B. Do not allow runways for transporting concrete to rest on reinforcing steel.

C. Reject and remove from site concrete not placed within 90 minutes from time mixing is started.

D. Deposit concrete as nearly as practicable in final position.

E. Do not allow concrete to drop freely more than four feet.

F. Place concrete in daylight and, excepting seal concrete, place in dry unless otherwise authorized by Engineer.

3.2 COMPACTION:

A. Use internal vibrating equipment, supplemented by hand rodding and tamping as required.

B. Do not use vibrators to move concrete laterally inside forms.

C. Internal vibrators shall maintain a speed of at least 5,000 impulses per minute when submerged in concrete.

D. Duration of vibration shall be limited to time necessary to produce satisfactory consolidation without causing segregation.

E. Move vibrator constantly and place in each specific spot only once.

3.3 BONDING AGAINST SET CONCRETE:

A. Thoroughly clean surfaces of set concrete to expose coarse aggregate.

B. Surfaces to be free of laitance, coating, foreign matter and loose particles.

C. Retighten forms.

D. Cleaned surfaces may be moist, but without free water when concrete is placed.

3.4 FIELD CONTROL AND TESTING

A. General: Quality of concrete as to conformance is responsibility of Contractor until accepted in place and verified by final cylinder tests.

1) Schedule field testing.

B. Tests: Testing lab to obtain standard laboratory compressive test cylinders when concrete is discharged from mixer.

1) Obtain set of three cylinders for each 50 cubic yards, or fraction thereof, placed each day, for each type of concrete.

2) Cure cylinders under laboratory conditions and test at 7 (one each) and 28 (two each) days of age.

C. Slump Tests: Testing lab to make slump tests of Class A and Class B concrete as it is discharged from mixer.

1) Perform tests at recurrence interval established by Testing Laboratory or for each set of test cylinders.
2) Slump tests may be made on any batch and failure to meet requirements will be cause for rejection of batch.

D. Reports: Label reports to identify portions of project into which materials are placed.

3.5 PROTECTION FOR REINFORCEMENT

A. Provide following minimum concrete cover over reinforcement

MINIMUM COVER IN INCHES.

Concrete cast against and permanently exposed to earth	3
Concrete exposed to earth or weather (#6 through #18 bars).	2
Concrete exposed to earth or weather #5 bar, W31 or D31 wire, and smaller.	1 1/2

3.6 REINFORCING

A. Bar Supports for Reinforcing Steel: Furnish supports to meet cover requirements contained herein or noted.
1) Furnish Hy-chairs for bent or top bars in solid slabs.
2) Maximum support spacing to be 100 times bar diameter.
3) Distance from end of bar to 1st chair not to exceed 25 times bar diameter.

B. Accurately fabricate reinforcement in accordance with CRSI Manual of Standard Practice.

C. Placing: Accurately and securely position in forms.
1) Reinforcement to be clean, free of rust, scale, dust, dirt, paint, oil or other foreign material.
2) Wire wrap or otherwise fasten steel at intersections and provide adequate support. Welding is not allowed.
3) Adjacent to earth, place bar supports on precast concrete pads compressed into subgrade.

D. Splicing of Reinforcement: Lap bars at splices a minimum of 24 bar diameters, unless noted or directed otherwise, and rigidly wire or clamp.
1) Minimize number of splices.
2) Place splices at points of minimum stress.

E. Wire Fabric:
1) Flatten prior to placement.
2) Overlap one full space of mesh at ends and edges and securely fasten.
3) Provide necessary supports to maintain fabric at proper location in concrete.
4) Fabric shall not cross expansion joints.

3.7 EMBEDDED ITEMS

A. General: Work may include embedment of pipes, inserts and other metal objects into concrete as shown, specified or ordered.
1) Firmly and securely fasten items in place prior to placement of concrete.
2) Protect items from being displaced, broken or deformed.
3) Items to be clean, free of rust, scale, dust, dirt, paint, oil or other foreign material.
4) Do not embed wood in concrete.
5) Tightly pack concrete around pipes and other metal work to prevent leakage and to provide prefect adhesion.
6) Protect pipes, conduits and open items from filling with concrete.

3.8 FORMS

A. General: Build true to line and grade, mortar tight and rigid to prevent displacement or sagging between supports.
1) Provide adequate supports and shoring.
2) Forms for permanently exposed surfaces to be smooth and free from irregularities, dents, sags or holes.
3) Bolts and rods for internal ties to be arranged such that upon removal metal will be not less than 1 1/2 inches from any concrete surface.
4) Remove form ties immediately after removal of forms and plug holes with grout within 24 hours

after removal and keep damp for four days to prevent shrinking.
5) Wire tying of forms is not permitted.
6) Construct forms for removal without hammering or prying against concrete.
7) Place suitable moldings to bevel or round exposed edges, at expansion joints, or other points to be left exposed, as may be required.

B. Coating: Prior to placement of reinforcement or concrete, coat exposed surfaces. Unexposed surfaces may be thoroughly wetted in lieu of oiling prior to placement of concrete.

C. Removal: Do not remove forms and/or form supports until concrete has obtained sufficient strength to support itself and any live loads it may be subjected to.

3.9 CURING

A. General: All concrete, including gunite, shall be water cured by covering with double thickness of burlap, cotton mats or other approved material kept thoroughly saturated with water.
1) Keep forms wet until removed.
2) Cure for a period of seven days for normal Portland cement or four days for high early strength cement.
3) Concrete poured in dry shall not be submerged until it has attained sufficient strength to adequately sustain stresses involved, nor shall it be subjected to flowing water for four days.
4) Begin curing of gunite as soon as possible without damaging surfaces, but not later than two hours after placing.

3.10 FINISHES

A. General: Power or hand float slabs to a true and even finish in a manner that will not bring excess fines to surface.
1) Consistency of the concrete shall be such that water does not accumulate at surface.
2) Float with wood or steel float and steel troweled to a smooth finish.
3) Troweling shall be minimum necessary to obtain a smooth, dense surface and shall not be done until mortar has hardened sufficiently to prevent excess fine material from being worked to surface.
4) Broom finish surfaces subject to pedestrian and vehicular traffic by lightly brushing with a push broom to produce a non-slip surface.

B. Repairs: As soon as forms can safely be removed, all irregular projections shall be chipped off flush with concrete and all voids produced by spacers or any honeycombing shall be pointed up with grout and troweled flush with concrete surface.
1) Honeycombing shall be cut out to expose a sound concrete surface prior to pointing.
2) Mortar pointing or parching is confined to repair of small defects in relatively green concrete. Where, in opinion of Engineer, substantial repairs are required, defective concrete shall be cut out to sound concrete and repaired with gunite or concrete or removed and reconstructed as directed.

3.11 QUALITY CONTROL TESTING DURING CONSTRUCTION

A. The Owner will employ a testing laboratory to perform following tests and to submit test reports.
1) Sampling Fresh Concrete: ASTM C 172, except modified for slump to comply with ASTM C 94.
2) Slump: ASTM C 143.
3) Air Content: ASTM C 173, volumetric method for lightweight or normal weight concrete; ASTM C 231 pressure for normal weight concrete; one for each set of cylinders.
4) Compression Test Specimen: ASTM C 31; mold and store for laboratory cured test specimens except when field-cure test specimens required.
5) Compressive Strength Tests: ASTM C 39.

B. Engineer may waive strength test when total quantity of a given class of concrete is less than 50 cubic yards.

C. Additional Tests: Testing service to make additional tests of in-place concrete when test results indicate specified concrete strengths and other characteristics have not been attained as directed by Engineer. Obtain test samples by cored cylinders complying with ASTM C 42, or other methods as directed. Contractor shall pay for such tests and any additional testing as may be required, when unacceptable concrete is verified.

4. MEASUREMENT AND PAYMENT

4.1 GENERAL:

A. No separate payment will be made for work covered by this section and all costs in connection therewith shall be included in contract price for item or structure to which it pertains.

END OF SECTION 32 05 23

SECTION 32 13 13
CONCRETE WALKS, CURBS, GUTTERS AND PAVEMENT

1. GENERAL

1.1 DESCRIPTION OF WORK
A. Extent of work is indicated on drawings and includes but is not limited to:
B. Curb.
C. Curb and gutter.
D. Valley gutter.
E. Sidewalks.
F. Concrete Pavement.

1.2 RELATED WORK
A. Section 30 00 00 - General Site Work Requirements
B. Section 31 20 00 - Earthwork
C. Section 32 05 23 - Concrete for Site Work or other Division-03 Sections.
D. Section 32 12 16 - Asphaltic Concrete Pavement

1.3 SUBMITTALS - comply with requirements of Section 30 00 00.

1.4 QUALITY ASSURANCE - comply with requirements of Section 30 00 00.

2. PRODUCTS

2.1 MATERIALS
A. Forms: Comply with requirements of Section 32 05 23 or other Division-03 Sections.
B. Welded Wire Fabric (WWF): Comply with requirements of Section 32 05 23 or other Division-03 Sections.
C. Reinforcing Bars: Comply with requirements of Section 32 05 23 or other Division-03 Sections.
D. Concrete Materials: Comply with requirements of Section 32 05 23 or other Division-03 Sections.
   1) Concrete pavement shall be Class-A concrete in accordance with Section 32 05 23 and reinforced with Forta CR fiber reinforcement, or approved equal, with fiber length in accordance with manufacturer's recommendations.
E. Preformed Joint Filler (PJF): Product to meet requirements of FDOT Section 932.
F. Joint Sealer for Pavement and Structures: Product to meet requirements of FDOT Section 932.

3. EXECUTION

3.1 INSPECTION
A. Examine areas where items are to be installed and notify Engineer of unsatisfactory conditions.
   1) Do not proceed with work until unsatisfactory conditions have been corrected.

3.2 SURFACE PREPARATION:
A. Prepare in accordance with applicable Division-30 specifications.
   1) Remove loose materials from compacted surface immediately before placing concrete.
B. Proof-roll concrete pavement subbase surface to check for unstable and yielding areas.
   1) Do not begin work until unsatisfactory conditions have been corrected.

3.3 FORM CONSTRUCTION:
A. Comply with requirements of Section 32 05 23 or other Division-03 Sections.
B. Check completed formwork for grade alignment to following tolerances:
   1) Top of forms not more than 1/8 inch in 10 feet.
   2) Vertical face on longitudinal axis not more than 1/4 inch in 10 feet.
C. Clean forms after each use, and coat as often as required to ensure separation from concrete without

damage.

3.4 **REINFORCEMENT** - Comply with requirements of Section 32 05 23 or other Division-03 Sections.

3.5 CONCRETE PLACEMENT

A. General: Comply with requirements of Section 32 05 23 or other Division-03 Sections and as herein specified.
B. Do not place concrete until subbase and forms have been checked for line and grade.
C. Moisten subbase if required to provide a uniform dampened condition at time concrete is placed.
D. Do not place concrete around manholes or other structures until they are at required finish elevation and alignment.
E. Deposit and spread concrete as far as practical in a continuous operation between transverse joints. If interrupted for more than 1/2 hour, place a construction joint.

3.6 JOINTS:

A. General: Construct expansion, weakened-plane (contraction), and construction joints true-to-line with face perpendicular to surface of concrete, unless otherwise indicated.
   1) Construct transverse joints at right angles to centerline or longitudinal direction, unless otherwise indicated.
   2) When joining existing structures, place transverse joints to align with previously placed joints.
B. Weakened-Plane (Contraction Joints): Provide transverse and longitudinal joints in accordance with spacing requirements contained herein and details shown on drawings.
   1) Joints may be tooled, sawed, or formed by use of an insert and shall be as follows unless dimensioned on drawings and include sealant reservoir where required.
   2) Construct with minimum depth equal to 1/4 concrete thickness and maximum width of 1/4 inch.
   3) Tooled Joints: Form in fresh concrete by grooving top portion with recommended cutting tool and finishing edges with a jointer.
   4) Sawed Joints: Form using powered saws equipped with shatterproof abrasive or diamond-rimmed blades. Cut as soon as surface will not be torn, abraded, or otherwise damaged by cutting action.
C. Construction Joints: Provide transverse and longitudinal joints in accordance with spacing requirements contained herein and details shown on drawings.
   1) Place construction joints at end of all pours and at locations where placement operations are stopped for a period of more than 1/2 hour, except where such pours terminate at expansion joints.
   2) Use standard metal key-way-section forms when details not shown on drawings.
D. Expansion Joints: Provide transverse and longitudinal joints in accordance with spacing requirements contained herein and details shown on drawings.
   1) Provide premolded joint filler for expansion joints at following locations:
      (a) At concrete pavement abutting concrete curbs, catch basins, manholes, inlets, structures, walks and other fixed objects, and at intersections of travel lanes unless otherwise indicated.
      (b) For sidewalks provide ½ inch joints at locations shown in details.
      (c) For curbs and gutters provide ½ inch joints at 500 feet intervals, ends of runs, beginning, middle and end of curved sections.
   2) Doweled joints are required only at locations of intersections of concrete pavement where vehicular traffic will cross the joint such as roadway intersections.
   3) Construct in accordance with details shown on drawings or as follows when not shown.
      (a) Extend joint fillers full-width and depth of joint less depth of sealant reservoir where required.
      (b) If no joint sealer, place top of joint filler flush with finish concrete surface.
      (c) Furnish joint fillers in one-piece lengths for full width being placed, wherever possible. Where more than one length is required, lace or clip joint filler sections together.
      (d) Protect top edge of joint filler during concrete placement with a metal cap or other temporary material. Remove protection after concrete has been placed on both sides of joint.
E. Joint Spacing: Unless noted otherwise, joint spacing shall be as follows:
   1) Curbs and Gutters: Comply with requirements of FDOT Section 520.
   2) Sidewalks: Comply with details contained in construction drawings.
   3) Concrete Pavement:
      (a) Longitudinal and transverse joint spacing to be not more than 15 feet in any direction.
      (b) On radius sections, maximum joint spacing to be 12 feet as measured along the longest edge

of curve.

(c) Do not use joint spacing of less than 4 feet.

F. Concrete pavement joint patterns to be at discretion of Contractor in accordance with Portland Cement Association (PCA) publication PA017.01P, "Concrete Parking Areas" and following publications. Comply with following:
   1) PCA PA0I7.01P, "Concrete Parking Areas".
   2) PCA IS059.03P, "Joint Design for Concrete Highway and Street Pavements".
   3) PCA IS211.01P, "Concrete Streets: Typical Pavement Sections and Jointing Details".
   4) PCA IS119.02P "Suggested Specifications for Construction of Concrete Streets".
   5) PCA MS152.01P "Typical Sections And Details"
   6) Concrete Institute of Florida, "Parking Area Specifications".

3.7 SEALANT RESERVOIRS

A. General: Construct sealant reservoirs as part of joint construction for joints located within concrete pavement subject to vehicular traffic and other locations as shown on drawings.
B. Unless noted otherwise, sealant reservoirs may be tooled, sawed or formed using inserts and shall be to dimensions shown on drawings.

3.8 JOINT SEALANT

A. General: Seal joints within concrete pavement subject to vehicular traffic and other locations as shown on drawings.
B. Comply with requirements of FDOT Section 932.

3.9 CONCRETE FINISHING:

A. After striking-off and consolidating concrete, smooth surface by screeding and floating
   1) Use hand methods when mechanical floating is not possible.
   2) Finish to a uniform texture.
B. After floating, test surface for trueness with 10' straightedge, distribute concrete as required to remove surface irregularities, and refloat as required to provide a continuous smooth finish.
C. Work edges of slabs, gutters, top edge of back of curb and formed joints with an edging tool, and round to 1/2" radius, unless otherwise indicated. Eliminate any tool marks on concrete surface.
D. After completion of floating and when excess moisture or surface sheen has disappeared, complete surface finishing, as follows:
   1) Broom finish by drawing a fine-hair broom across concrete surface, perpendicular to line of traffic. Repeat operation if required to provide a fine line texture acceptable to Engineer.
   2) On inclined slab surfaces, provide a coarse, non-slip finish by scoring surface with a stiff-bristled broom, perpendicular to line of traffic.
E. Do not remove forms for 24 hours after concrete has been placed. After form removal, clean ends of joints and point-up any minor honeycombed areas. Remove and replace areas or sections with major defects, as directed by Engineer.

3.10 CURING:

A. Protect and cure finished concrete paving, complying with requirements of applicable Division-30 or Division-03 specifications. Use moist-curing methods for initial curing whenever possible.

3.11 REPAIRS AND PROTECTIONS:

A. Repair or replace broken or defective concrete, as directed by Engineer.
B. Protect concrete from damage until acceptance of work. Exclude traffic from pavement for at least 14 days after placement.
   1) When construction traffic is permitted, maintain pavement as clean as possible by removing surface stains and spillage of materials as they occur.
C. Sweep concrete pavement and wash free of stains, discoloration, dirt and other foreign material just prior to final inspection.

3.12 **TESTING AND INSPECTION REQUIREMENTS** - comply with requirements of Section 30 00 00 and Section 32 05 23.

3.13 CONCRETE PAVEMENT ACCEPTANCE TESTING

A. Acceptance testing to consist of one pass of standard 10-foot rolling straightedge operated while pavement is plastic.
   1) Upon sufficient hardening to walk on concrete, test for irregularities exceeding 1/8 inch using straightedge.
   2) Testing and correction to be in accordance with FDOT Specification 350.
B. At option of Owner, flood with water and inspect for ponding.

4. MEASUREMENT AND PAYMENT

4.1 GENERAL

A. The contract unit price shall be compensation in full for furnishing all materials, labor, equipment, tools and incidentals necessary for completion in every detail in accordance with plans and specifications.
   1) There will be no separate payment for clean up and restoration of property, or other items under this section unless specifically identified on the proposal, bid form, or contract.

END OF SECTION 32 13 13

SECTION 328400 PLANTING IRRIGATION

PART 1 - GENERAL

1.1 RELATED DOCUMENTS

A. Drawings and general provisions of the Contract, including General and Supplementary Conditions and Division 01 Specification Sections, apply to this Section.

1.2 SUMMARY

A. Section Includes:

1. Piping.
2. Manual valves.
3. Automatic control valves.
4. Miscellaneous piping specialties.
5. Sprinklers.
6. Drip irrigation specialties.
7. Controllers.
8. Boxes for automatic control valves.

1.3 DEFINITIONS

A. Circuit Piping: Downstream from control valves to sprinklers, specialties, and drain valves. Piping is under pressure during flow.

B. Drain Piping: Downstream from circuit-piping drain valves. Piping is not under pressure.

C. Main Piping: Downstream from point of connection to water distribution piping to and including control valves. Piping is under water-distribution-system pressure.

D. Low Voltage: As defined in NFPA 70 for circuits and equipment operating at less than 50 V or for remote-control, signaling power-limited circuits.

1.4 PERFORMANCE REQUIREMENTS

A. Irrigation zone control shall be automatic operation with controller valves.

B. Location of Sprinklers and Specialties: Design location is approximate. Make minor adjustments necessary to avoid plantings and obstructions such as signs and light standards. Maintain 100 percent irrigation coverage of areas indicated.

C. Minimum Working Pressures: The following are minimum pressure requirements for piping, valves, and specialties unless otherwise indicated:

1. Irrigation Main Piping: **200 psig**
2. Circuit Piping: **150 psig**

1.5 ACTION SUBMITTALS

A. Product Data: For each type of product indicated. Include rated capacities, operating characteristics and furnished specialties and accessories.

B. Wiring Diagrams: for power, signal, and control wiring.

C. Delegated-Design Submittal: For irrigation systems indicated to comply with performance requirements and design criteria, including analysis data signed and sealed by the qualified professional responsible for their preparation.

1.6 INFORMATIONAL SUBMITTALS

A. Coordination Drawings: Irrigation systems, drawn to scale, on which components are shown and coordinated with each other, using input from Installers of the items involved. Also include adjustments necessary to avoid plantings and obstructions such as signs and light standards.

B. Qualification Data: For qualified Installer.

C. Zoning Chart: Show each irrigation zone and its control valve.

D. Controller Timing Schedule: Indicate timing settings for each automatic controller zone.

E. Field quality-control reports.

1.7 CLOSEOUT SUBMITTALS

A. Operation and Maintenance Data: For sprinklers, drip, controllers, and automatic control valves to include in operation and maintenance manuals.

1.8 QUALITY ASSURANCE

A. Installer Qualifications: An employer of workers that include a certified irrigation designer qualified by The Irrigation Association or Professional Class member of the American Society of Irrigation Consultants

B. Electrical Components, Devices, and Accessories: Listed and labeled as defined in NFPA 70, by a qualified testing agency, and marked for intended location and application.

1.9 DELIVERY, STORAGE, AND HANDLING

A. Deliver piping with factory-applied end caps. Maintain end caps through shipping, storage, and handling to prevent pipe-end damage and to prevent entrance of dirt, debris, and moisture.

B. Store plastic piping protected from direct sunlight. Support to prevent sagging and bending.

1.10 PROJECT CONDITIONS

A. Interruption of Existing Water Service: Do not interrupt water service to facilities occupied by Owner or others unless permitted under the following conditions and then only after arranging to provide temporary water service according to requirements indicated:

1. Notify Owner no fewer than two days in advance of proposed interruption of water service.
2. Do not proceed with interruption of water service without Owner's written permission.

PART 2 - PRODUCTS

2.1 PIPES, TUBES, AND FITTINGS

A. Comply with requirements in the piping schedule for applications of pipe, tube, and fitting materials, and for joining methods for specific services, service locations, and pipe sizes.

B. PVC Pipe: ASTM D 1785, PVC 1120 compound, Schedules 40 and 80.

1. PVC Socket Fittings: ASTM D 2466, Schedules 40 and 80.
2. PVC Threaded Fittings: ASTM D 2464, Schedule 80.
3. PVC Socket Unions: Construction similar to MSS SP-107, except both headpiece and tailpiece shall be PVC with socket ends.

C. PVC Pipe, Pressure Rated: ASTM D 2241, PVC 1120 compound, SDR 21 and SDR 26.

1. PVC Socket Fittings: ASTM D 2467, Schedule 80.
2. PVC Socket Unions: Construction similar to MSS SP-107, except both headpiece and tailpiece shall be PVC with socket or threaded ends.

2.2 PIPING JOINING MATERIALS

A. Solvent Cements for Joining PVC Piping: ASTM D 2564. Include primer according to ASTM F 6q56.

B. Plastic, Pipe-Flange Gasket, Bolts, and Nuts: Type and material recommended by piping system manufacturer unless otherwise indicated.

2.3 ENCASEMENT FOR PIPING

A. Standard: ASTM A 674 or AWWA C105.

2.4 MANUAL VALVES

A. Plastic Threaded Ball Valves:

1. Description:
   a. Standard: MSS SP-122.
   b. Pressure Rating: 150 psig
   c. Body Material: PVC.
   d. Type: Union.
   e. End Connections: Socket or threaded.
   f. Port: Full.

2.5 AUTOMATIC CONTROL VALVES

A. Plastic Automatic Control Valve

1. General Information
   a. Provide valve as per the specification.

2. Valve
   a. Irrigation valve specifications include but are not limited to:
      1) The valve body and bonnet shall be constructed of heavy-duty and ultra-violet resistant plastic.
      2) The bonnet shall be assembled to the body using multi-drive screws for use with flathead, Phillips, or hexagonal tools.
      3) Shall possess a water tight seal between the body and bonnet.
      4) Shall be a normally closed, forward flow design.
      5) Shall have a filtered pilot flow to resist debris and clogging.
      6) Shall be slow closing to prevent water hammer from causing subsequent system damage.
      7) Shall have a Ø1 inch NPT globe and angle inlet as well as a Ø1 inch NPT outlet.
      8) Shall have a manual internal bleed capability to operate the valve without allowing water into the valve box.
      9) Shall have a non-rising flow control handle to adjust water flow as needed.
      10) Shall include a 24 VAC 50/60 Hz solenoid capable of 2-wire operation.
         a) Inrush current: 0.41A (9.9VA) at 60Hz
         b) Holding current: 0.14A (3.43 VA) at 60Hz
      11) Operating flow rate of 2-40 gpm (7.6-151.4 l/min).
      12) Operating pressure range of 15-150 psi (1.04-10.4 bar).
      13) Water temperature: Up to 110°F (43°C).
      14) Ambient temperature: Up to 125°F (52°C).
      15) Shall accommodate an optional field-installed pressure regulating dial.
      16) Shall accept an optional latching solenoid for use with battery operated controllers.
      17) Shall be available with an optional purple flow control handle for use with non-potable water applications.
      18) Shall have a heavy-duty stainless steel spring for positive diaphragm closure.

2.6 SPRINKLERS

1. Rotors
   a. designed to provide uniform coverage over entire area of spray shown on drawings at available water pressure or as follows:
      1) Rotor for shrub or groundcover (21-40 feet) spacing: maximum 30-40 psi.
2. Pop-Up Spray
   a. Rotor for shrub or small turf areas (8-17 feet) spacing: maximum 30-40 psi. Irrigation rotor specifications include but are not limited to:
      1) The rotor body, stem and nozzle, shall be constructed of heavy-duty and ultra-violet resistant plastic.
         a) Shall have a heavy-duty stainless steel retract spring for positive pop-down.
      2) Shall have integrated seals and method for clearing debris.
         a) Oversized pressure activated wiper seal prevents leaks and protects internals from debris.
         b) Precision controlled flush at pop-down to clear debris from the unit, to assure positive stem retraction in all soil types.
         c) Ported arc adjustment screw to clear debris from unit at pop-down
      3) Shall have a slip clutch installation feature to allow easy arc alignment.
      4) Non-reversing 360° full arc rotation.
      5) 7.38 inch body height; 4.0 inch and 12 inch pop-up height (measured to center of nozzle).
      6) Operating range of 8 to 25 feet.
      7) Operating pressure range of 5 to 55 psi.
      8) Shall have a precipitation rate of 0.20 to 1.50 in/hr.
      9) Shall include a green cover and a flow shut-off valve in the rotor head.
      10) Exposed surface diameter shall measure 1.5 inch.
      11) Shall include Ø3/4 inch NPT female threaded bottom inlet.
      12) Shall include a nozzle tree containing twelve nozzles with indicated flow rates from 0.76 to 9.63 gpm and an exit trajectory of 10-25°.
      13) All rotor body components shall be removable from the top without special tools in order to provide quick and easy flushing and maintenance of the sprinkler.
      14) Shall include slot in cover for use of a pull up tool for ease of nozzle installation and replacement.
      15) Shall include nozzle retention screw that may also be used to reduce spray radius by 25%.
      16) Shall have a filter screen in the stem to protect the drive from clogging and to simplify removal for cleaning and flushing the system.
      17) Shall utilize nozzles designed to deliver even distribution over the entire radius including large wind resistant droplets and gentle close-in-watering.

2.7 CONTROLLERS

A. Description:

1. The controller shall be a full-featured, commercial-industrial product for the purpose of irrigation operation, management, and monitoring of control valves and sensors. The

controller shall be of a modular design that is provided with a standard 8-station output module. The controller shall be expandable to 12-station decoder output module controller Stations for Automatic Control Valves: Each station is variable from approximately 5 to 60 minutes. Include switch for manual or automatic operation of each station.

2. Exterior Control Enclosures: NEMA 250, Type 4, weatherproof, with locking cover and two matching keys; include provision for grounding.
   a. Body Material: Molded plastic.
   b. Mounting: Pole mounted.
3. Control Transformer: 24-V secondary, with primary fuse.
4. Depending on requirements, transformer input shall be 120 VAC, 60 Hz or 230 VAC, 50 Hz. Maximum output per station shall be 24 VAC, up to 0.56 A. Maximum output per P/MV terminal shall be 24 VAC, up to 0.56 A.
5. The controller transformer shall be equipped with an internal, self-resetting thermal circuit breaker to protect against overheating.
6. The controller transformer shall also be equipped with a ground lug for connecting to proper earth-ground hardware.
7. Station Modules
   a. Controller shall provide 12 (plastic enclosure) station output module slots Timing Device: Adjustable, 24-hour, 14-day clock, with automatic operations to skip operation any day in timer period, to operate every other day, or to operate two or more times daily.
   b. Station modules shall be secured against field wiring tension by locking levers.
   c. Using 2 wire only, the controller shall be expandable from 8 to 38 stations (plastic) and 8 to 54 stations (metal and pedestals).
   d. Using conventional station modules in conjunction with one decoder output module (model: EZ-DM), all controller configurations (plastic, metal, pedestal) shall expand up to 54 stations.
   e. Using only one decoder output module (model: EZ-DM) all controller configurations (plastic, pedestal) shall expand up to 54 stations.
   f. The controller shall have a base model capacity of 12 stations, consisting of one 8-station output module.
   g. Each station output shall supply 24 VAC, up to 0.56 A current for solenoid activation.
   h. The controller shall have self-diagnostic, electronic short circuit protection that detects a faulty circuit, continues watering the remainder of the program, and reports the faulty station via alert/notification to the user's smartphone, tablet, or computer. The built-in milliamp sensor shall constantly be measuring the current draw of each individual station.
   i. Module hardware
      1. The controller output modules shall have metal oxide varistors (MOVs) and copper induction coils on each station output circuit to help protect the microcircuitry from power surges
         i. Sensor inputs - The controller shall be equipped with two dedicated general-purpose sensor ports.
      2. The sensor inputs shall be compatible with any standard normally closed or normally open "Clik-type" sensors for automatic shutdown during rain, freeze, soil moisture, and/or wind events.

3. The sensor inputs shall also be compatible with the Rainbird Flow Meter for flow monitoring, alerts, and reporting.

k. P/MV outputs
   1. The controller shall have one built-in P/MV (24 VAC) output with a capacity of up to 0.56 A.
   2. The P/MV output shall be selectable as active or disabled per each individual station.
   3. A common wire terminal is provided on the controller's power module, and additional commons are provided on each station output module.
      a. SmartPort®
         1) The controller shall be pre-wired with a SmartPort connector for easy connection of optional wireless remote controls.
         2) For international or short-range uses, the wireless remote control shall be the Rainbird model with a useful range of up to 1,000' (330 m).
         3) For use in the United States or long-range uses, where permitted, the wireless remote shall be Rainbird model with a useful range of up to 2 mi. (3.2 km).
   4. 3.10 Wi-Fi information
      a. The controller shall be equipped with built-in Wi-Fi.
      b. Wi-Fi operation shall be 802.11 b/g/n.
      c. Wi-Fi frequency is 2.4 GHz.
      d. Security shall have the ability to auto detect and offer the following security settings: WPA2, WPA Personal, and WPA Auto.

8. Moisture Sensor: Adjustable from one to seven days, to shut off water flow during rain.
9. Wiring: UL 493, Type UF multiconductor, with solid-copper conductors; insulated cable; suitable for direct burial.
   a. Feeder-Circuit Cables: No. 12 AWG minimum, between building and controllers.
   b. Low-Voltage, Branch-Circuit Cables: No. 14 AWG minimum, between controllers and automatic control valves; color-coded different from feeder-circuit-cable jacket color; with jackets of different colors for multiple-cable installation in same trench.
   c. Splicing Materials: Manufacturer's packaged kit consisting of insulating, spring-type connector or crimped joint and epoxy resin moisture seal; suitable for direct burial.

2.8 BOXES FOR AUTOMATIC CONTROL VALVES

A. Plastic Boxes:
   1. Description: Box and cover, with open bottom and openings for piping; designed for installing flush with grade.
      a. Size: As required for valves and service.
      b. Shape: Round (for gate valves) and Rectangular for control valves.
      c. Sidewall Material: PE.
      d. Cover Material: PE

B. Drainage Backfill: Cleaned gravel or crushed stone, graded from 3/4 inch minimum to 3 inches maximum.

PART 3 - EXECUTION

3.1 EARTHWORK

A. Excavating, trenching, and backfilling are specified in Section 312000 "Earth Moving."

B. Install warning tape directly above pressure piping, 12 inches below finished grades, except 6 inches below subgrade under pavement and slabs.

C. Drain Pockets: Excavate to sizes indicated. Backfill with cleaned gravel or crushed stone, graded from 3/4 to 3 inches to 12 inches below grade. Cover gravel or crushed stone with sheet of asphalt-saturated felt and backfill remainder with excavated material.

D. Provide minimum cover over top of underground piping according to the following:

1. Irrigation Main Piping: Minimum depth of 36 inches below finished grade, or not less than 18 inches below average local frost depth, whichever is deeper.
2. Circuit Piping: 12 inches.
3. Drain Piping: 12 inches.
4. Sleeves: 24 inches.

3.2 PREPARATION

A. Set stakes to identify locations of proposed irrigation system. Obtain Architect's approval before excavation.

3.3 PIPING INSTALLATION

A. Location and Arrangement: Drawings indicate location and arrangement of piping systems. Install piping as indicated unless deviations are approved on Coordination Drawings.

B. Install piping at minimum uniform slope of 0.5 percent down toward drain valves.

C. Install piping free of sags and bends.

D. Install groups of pipes parallel to each other, spaced to permit valve servicing.

E. Install fittings for changes in direction and branch connections.

F. Install unions adjacent to valves and to final connections to other components with NPS 2 or smaller pipe connection.

G. Install underground thermoplastic piping according to ASTM D 2774 and ASTM F 690.

H. Install expansion loops in control-valve boxes for plastic piping.

I. Lay piping on solid subbase, uniformly sloped without humps or depressions.

J. Install ductile-iron piping according to AWWA C600.

K. Install PVC piping in dry weather when temperature is above 40 deg F. Allow joints to cure at least 24 hours at temperatures above 40 deg F before testing.

L. Install water regulators with shutoff valve and strainer on inlet and pressure gage on outlet. Install shutoff valve on outlet. Install aboveground or in control-valve boxes.

M. Water Hammer Arresters: Install between connection to building main and circuit valves aboveground or in control-valve boxes.

N. Install piping in sleeves under parking lots, roadways, and sidewalks.

O. Install sleeves made of Schedule 40 PVC pipe and socket fittings, and solvent-cemented joints.

P. Install transition fittings for plastic-to-metal pipe connections according to the following:
1. Underground Piping:
   a. NPS 1-1/2 and Smaller: Plastic-to-metal transition fittings.
   b. NPS 2 and Larger: AWWA transition couplings.
2. Aboveground Piping:
   a. NPS 2 and Smaller: Plastic-to-metal transition fittings.
   b. NPS 2 and Larger: Use dielectric flange kits with one plastic flange.

Q. Install dielectric fittings for dissimilar-metal pipe connections according to the following:
1. Underground Piping:
   a. NPS 2 and Smaller: Dielectric coupling or dielectric nipple.
   b. NPS 2-1/2 and Larger: Prohibited except in control-valve box.
2. Aboveground Piping:
   a. NPS 2 and Smaller: Dielectric union.
   b. NPS 2-1/2 to NPS 4: Dielectric flange.
   c. NPS 5 and Larger: Dielectric flange kit.
3. Piping in Control-Valve Boxes:
   a. NPS 2 and Smaller: Dielectric union.
   b. NPS 2-1/2 to NPS 4: Dielectric flange.
   c. NPS 5 and Larger: Dielectric flange kit.

3.4 JOINT CONSTRUCTION

A. Ream ends of pipes and tubes and remove burrs. Bevel plain ends of steel pipe.

B. Remove scale, slag, dirt, and debris from inside and outside of pipe and fittings before assembly.

C. Threaded Joints: Thread pipe with tapered pipe threads according to ASME B1.20.1. Cut threads full and clean using sharp dies. Ream threaded pipe ends to remove burrs and restore full ID. Join pipe fittings and valves as follows:
1. Apply appropriate tape or thread compound to external pipe threads unless dry seal threading is specified.
2. Damaged Threads: Do not use pipe or pipe fittings with threads that are corroded or damaged. Do not use pipe sections that have cracked or open welds.

D. Flanged Joints: Select rubber gasket material, size, type, and thickness for service application. Install gasket concentrically positioned. Use suitable lubricants on bolt threads.

E. Ductile-Iron Piping Gasketed Joints: Comply with AWWA C600 and AWWA M41.

F. Copper-Tubing Brazed Joints: Construct joints according to CDA's "Copper Tube Handbook," using copper-phosphorus brazing filler metal.

G. Copper-Tubing Soldered Joints: Apply ASTM B 813 water-flushable flux to tube end unless otherwise indicated. Construct joints according to ASTM B 828 or CDA's "Copper Tube Handbook," using lead-free solder alloy (0.20 percent maximum lead content) complying with ASTM B 32.

H. PE Piping Fastener Joints: Join with insert fittings and bands or fasteners according to piping manufacturer's written instructions.

I. PE Piping Heat-Fusion Joints: Clean and dry joining surfaces by wiping with clean cloth or paper towels. Join according to ASTM D 2657.

1. Plain-End PE Pipe and Fittings: Use butt fusion.
2. Plain-End PE Pipe and Socket Fittings: Use socket fusion.

J. PVC Piping Solvent-Cemented Joints: Clean and dry joining surfaces. Join pipe and fittings according to the following:

1. Comply with ASTM F 402 for safe-handling practice of cleaners, primers, and solvent cements.
2. PVC Pressure Piping: Join schedule number, ASTM D 1785, PVC pipe and PVC socket fittings according to ASTM D 2672. Join other-than-schedule-number PVC pipe and socket fittings according to ASTM D 2855.

3.5 VALVE INSTALLATION

A. Valves: Install in boxes for automatic control valves or aboveground between shutoff valves.

3.6 SPRINKLER INSTALLATION

A. Install sprinklers after hydrostatic test is completed.

B. Install sprinklers at manufacturer's recommended heights.

C. Locate part-circle sprinklers to maintain a minimum distance of 6 inches from walls and 2 inches from other boundaries unless otherwise indicated.

3.7 AUTOMATIC IRRIGATION-CONTROL SYSTEM INSTALLATION

A. Equipment Mounting: Install exterior freestanding controllers within manufacturer plastic cabinet.

1. Place and secure anchorage devices. Use setting drawings, templates, diagrams, instructions, and directions furnished by manufacturer.
2. Install anchor bolts to elevations required for proper attachment to supported equipment per manufacturer.

B. Install control cable in same trench as irrigation piping and at least 2 inches below piping. Provide conductors of size not smaller than recommended by controller manufacturer. Install cable in separate sleeve under paved areas.

3.8 CONNECTIONS

A. Comply with requirements for piping specified for irrigation water supply as directed by local permitting requirements and Chapter 62-524, F.A.C., rules of Florida Department of Environmental Protection for piping, fittings, and specialties.

B. Install piping adjacent to equipment, valves, and devices to allow service and maintenance.

C. Connect wiring between controllers and automatic control valves.

3.9 IDENTIFICATION

A. Identify system components. Comply with requirements for identification specified in Section 220553 "Identification for Plumbing Piping and Equipment."

B. Equipment Nameplates and Signs: Install engraved plastic-laminate equipment nameplates and signs on each automatic controller.
1. Text: In addition to identifying unit, distinguish between multiple units, inform operator of operational requirements, indicate safety and emergency precautions, and warn of hazards and improper operations.

C. Warning Tapes: Arrange for installation of continuous, underground, detectable warning tapes over underground piping during backfilling of trenches. See Section 312000 "Earth Moving" for warning tapes.

3.10 FIELD QUALITY CONTROL

A. Manufacturer's Field Service: Engage a factory-authorized service representative to inspect, test, and adjust components, assemblies, and equipment installations, including connections.

B. Perform tests and inspections.
1. Manufacturer's Field Service: Engage a factory-authorized service representative to inspect components, assemblies, and equipment installations, including connections, and to assist in testing.

C. Tests and Inspections:
1. Leak Test: After installation, charge system and test for leaks. Repair leaks and retest until no leaks exist.
2. Operational Test: After electrical circuitry has been energized, operate controllers and automatic control valves to confirm proper system operation.

3. Test and adjust controls and safeties. Replace damaged and malfunctioning controls and equipment.

D. Any irrigation product will be considered defective if it does not pass tests and inspections.

E. Prepare test and inspection reports.

3.11 STARTUP SERVICE

A. Perform startup service.
1. Complete installation and startup checks according to manufacturer's written instructions.
2. Verify that controllers are installed and connected according to the Contract Documents.
3. Verify that electrical wiring installation complies with manufacturer's submittal.

3.12 ADJUSTING

A. Adjust settings of controllers.

B. Adjust automatic control valves to provide flow rate at rated operating pressure required for each sprinkler circuit.

C. Adjust sprinklers and devices, except those intended to be mounted aboveground, so they will be flush with finish grade.

3.13 CLEANING

A. Flush dirt and debris from piping before installing sprinklers and other devices.

3.14 DEMONSTRATION

A. Train Owner's maintenance personnel to adjust, operate, and maintain automatic control valves and controllers.

3.15 PIPING SCHEDULE

A. Install components having pressure rating equal to or greater than system operating pressure.

B. Piping in control-valve boxes and aboveground may be joined with flanges or unions instead of joints indicated.

C. Underground irrigation main piping NPS 4 shall be one of the following:
1. Class 200 PVC pipe and socket fittings, and solvent-cemented joints.

D. Underground irrigation main piping, NPS 5 and larger, shall be the following:
1. Class 200 PVC pipe and socket fittings; and solvent-cemented joints.

E. Circuit piping, NPS **2** the following:
1. Schedule 40, PVC pipe and socket fittings; and solvent-cemented joints.

F. Circuit piping, NPS 2-1/2 to NPS 4 shall be the following:
1. Schedule 40, PVC pipe and socket fittings; and solvent-cemented joints.

G. Underground Branches and Offsets at Sprinklers and Devices: Schedule 80, PVC pipe; threaded PVC fittings; and threaded joints.
   1. Option: Plastic swing-joint assemblies, with offsets for flexible joints, manufactured for this application.

END OF SECTION 328400

SECTION 329200 - RESTORATION

PART 1 - GENERAL

1.1 RELATED DOCUMENTS

A. Drawings and general provisions of the Contract, including General and Supplementary Conditions and Division 01 Specification Sections, apply to this Section.

1.2 SUMMARY

A. Section Includes:
   1. Sodding.

B. Related Requirements:
   1. Section 329300 "Plants" for trees, shrubs, ground covers, and other plants as well as border edgings and mow strips.

1.3 DEFINITIONS

A. Finish Grade: Elevation of finished surface of planting soil.

B. Pesticide: A substance or mixture intended for preventing, destroying, repelling, or mitigating a pest. Pesticides include insecticides, miticides, herbicides, fungicides, rodenticides, and molluscicides. They also includes substances or mixtures intended for use as a plant regulator, defoliant, or desiccant.

C. Pests: Living organisms that occur where they are not desired or that cause damage to plants, animals, or people. Pests include insects, mites, grubs, mollusks (snails and slugs), rodents (gophers, moles, and mice), unwanted plants (weeds), fungi, bacteria, and viruses.

D. Planting Soil: Existing, on-site soil; imported soil; or manufactured soil that has been modified with soil amendments and perhaps fertilizers to produce a soil mixture best for plant growth. See “Soil Preparation (Performance Specification)" and drawing designations for planting soils.

E. Subgrade: The surface or elevation of subsoil remaining after excavation is complete, or the top surface of a fill or backfill before planting soil is placed.

1.4 INFORMATIONAL SUBMITTALS

A. Qualification Data: For landscape Installer.

B. Certification of Grass Seed: From seed vendor for each grass-seed monostand or mixture, stating the botanical and common name, percentage by weight of each species and variety, and percentage of purity, germination, and weed seed. Include the year of production and date of packaging.

1. Certification of each seed mixture for sod. Include identification of source and name and telephone number of supplier.

C. Product Certificates: For fertilizers, from manufacturer.

D. Pesticides and Herbicides: Product label and manufacturer's application instructions specific to Project.

1.5 CLOSEOUT SUBMITTALS

A. Maintenance Data: Recommended procedures to be established by Owner for maintenance of turf during a calendar year. Submit before expiration of required maintenance periods.

1.6 QUALITY ASSURANCE

A. Installer Qualifications: A qualified landscape installer whose work has resulted in successful turf establishment.
1. Professional Membership: Installer shall be a member in good standing of either the Professional Landcare Network or the American Nursery and Landscape Association.
2. Experience: Five years' experience in turf installation in addition to requirements in Section 014000 "Quality Requirements."
3. Installer's Field Supervision: Require Installer to maintain an experienced full-time supervisor on Project site when work is in progress.

1.7 DELIVERY, STORAGE, AND HANDLING

A. Seed and Other Packaged Materials: Deliver packaged materials in original, unopened containers showing weight, certified analysis, name and address of manufacturer, and indication of compliance with state and Federal laws, as applicable.

B. Sod: Harvest, deliver, store, and handle sod according to requirements in "Specifications for Turfgrass Sod Materials" and "Specifications for Turfgrass Sod Transplanting and Installation" sections in TPI's "Guideline Specifications to Turfgrass Sodding." Deliver sod within 24 hours of harvesting and in time for planting promptly. Protect sod from breakage and drying.

C. Bulk Materials:
1. Do not dump or store bulk materials near structures, utilities, walkways, and pavements, or on existing turf areas or plants.
2. Provide erosion-control measures to prevent erosion or displacement of bulk materials; discharge of soil-bearing water runoff; and airborne dust reaching adjacent properties, water conveyance systems, or walkways.
3. Accompany each delivery of bulk materials with appropriate certificates.

PART 2 - PRODUCTS

2.1 TURFGRASS SOD

A. Turfgrass Sod: Certified, complying with "Specifications for Turfgrass Sod Materials" in TPI's "Guideline Specifications to Turfgrass Sodding." Furnish viable sod of uniform density, color, and texture that is strongly rooted and capable of vigorous growth and development when planted.

B. Turfgrass Species: Zoysia Grass 'El Toro' (Eremochloa ophiuroides).

C. Turfgrass Species: Sod of grass species as follows, with not less than 85 percent germination, not less than 95 percent pure seed, and not more than 0.5 percent weed seed:

2.2 FERTILIZERS

A. Commercial Fertilizer: Commercial-grade complete fertilizer of neutral character, consisting of fast- and slow-release nitrogen, 50 percent derived from natural organic sources of urea formaldehyde, phosphorous, and potassium in the following composition:
   1. Composition: 1 lb/1000 sq. ft. of actual nitrogen, 4 percent phosphorous, and 2 percent potassium, by weight.
   2. Composition: Nitrogen, phosphorous, and potassium in amounts recommended in soil reports from a qualified soil-testing laboratory.

B. Slow-Release Fertilizer: Granular or pelleted fertilizer consisting of 50 percent water-insoluble nitrogen, phosphorus, and potassium in the following composition:

   1. Composition: 20 percent nitrogen, 10 percent phosphorous, and 10 percent potassium, by weight.
   2. Composition: Nitrogen, phosphorous, and potassium in amounts recommended in soil reports from a qualified soil-testing laboratory.

2.3 PESTICIDES

A. General: Pesticide, registered and approved by the EPA, acceptable to authorities having jurisdiction, and of type recommended by manufacturer for each specific problem and as required for Project conditions and application. Do not use restricted pesticides unless authorized in writing by authorities having jurisdiction.

B. Pre-Emergent Herbicide (Selective and Nonselective): Effective for controlling the germination or growth of weeds within planted areas at the soil level directly below the mulch layer.

C. Post-Emergent Herbicide (Selective and Nonselective): Effective for controlling weed growth that has already germinated.

PART 3 - EXECUTION

3.1 EXAMINATION

A. Examine areas to be planted for compliance with requirements and other conditions affecting installation and performance of the Work.
   1. Verify that no foreign or deleterious material or liquid such as paint, paint washout, concrete slurry, concrete layers or chunks, cement, plaster, oils, gasoline, diesel fuel, paint thinner, turpentine, tar, roofing compound, or acid has been deposited in soil within a planting area.
   2. Suspend planting operations during periods of excessive soil moisture until the moisture content reaches acceptable levels to attain the required results.
   3. Uniformly moisten excessively dry soil that is not workable or which is dusty.

B. Proceed with installation only after unsatisfactory conditions have been corrected.

C. If contamination by foreign or deleterious material or liquid is present in soil within a planting area, remove the soil and contamination as directed by Architect and replace with new planting soil.

3.2 TURF AREA PREPARATION

A. General: Prepare planting area for soil placement and mix planting soil according to Section 329113 "Soil Preparation."

B. Coordinate "Placing Planting Soil" Paragraph below with Section 329113 "Soil Preparation" or Section 329115 "Soil Preparation (Performance Specification)."

C. Placing Planting Soil: Blend planting soil in place.
   1. Reduce elevation of planting soil to allow for soil thickness of sod.

D. Moisten prepared area before planting if soil is dry. Water thoroughly and allow surface to dry before planting. Do not create muddy soil.

E. Before planting, obtain Architect's acceptance of finish grading; restore planting areas if eroded or otherwise disturbed after finish grading.

F. Moisten prepared area before planting if surface is dry. Water thoroughly and allow surface to dry before planting. Do not create muddy soil.

3.3 SODDING

A. Lay sod within 24 hours of harvesting. Do not lay sod if dormant or if ground is frozen or muddy.

B. Lay sod to form a solid mass with tightly fitted joints. Butt ends and sides of sod; do not stretch or overlap. Stagger sod strips or pads to offset joints in adjacent courses. Avoid damage to soil or

sod during installation. Tamp and roll lightly to ensure contact with soil, eliminate air pockets, and form a smooth surface. Work sifted soil or fine sand into minor cracks between pieces of sod; remove excess to avoid smothering sod and adjacent grass.

1. Lay sod across slopes exceeding 1:3.
2. Anchor sod on slopes exceeding 1:6 with wood pegs spaced as recommended by sod manufacturer but not less than two anchors per sod strip to prevent slippage.

C. Saturate sod with fine water spray within two hours of planting. During first week after planting, water daily or more frequently as necessary to maintain moist soil to a minimum depth of 1-1/2 inches below sod.

3.4 TURF MAINTENANCE

A. General: Maintain and establish turf by watering, fertilizing, weeding, mowing, trimming, replanting, and performing other operations as required to establish healthy, viable turf. Roll, regrade, and replant bare or eroded areas and re-mulch to produce a uniformly smooth turf. Provide materials and installation the same as those used in the original installation.

1. Fill in as necessary soil subsidence that may occur because of settling or other processes. Replace materials and turf damaged or lost in areas of subsidence.
2. In areas where mulch has been disturbed by wind or maintenance operations, add new mulch and anchor as required to prevent displacement.
3. Apply treatments as required to keep turf and soil free of pests and pathogens or disease. Use integrated pest management practices whenever possible to minimize the use of pesticides and reduce hazards.

B. Watering:

1. Schedule watering to prevent wilting, puddling, erosion, and displacement of seed or mulch. Lay out temporary watering system to avoid walking over muddy or newly planted areas.
2. Water turf with fine spray at a minimum rate of 1 inch per week unless rainfall precipitation is adequate.

C. Mow turf as soon as top growth is tall enough to cut. Repeat mowing to maintain specified height without cutting more than one-third of grass height. Remove no more than one-third of grass-leaf growth in initial or subsequent mowings. Do not delay mowing until grass blades bend over and become matted. Do not mow when grass is wet. Schedule initial and subsequent mowings to maintain the following grass height:

1. Mow Zoysia grass to a height of 1 to 2.5 inch.

3.5 SATISFACTORY TURF

A. Turf installations shall meet the following criteria as determined by Architect:

1. Satisfactory Seeded Turf: At end of maintenance period, a healthy, uniform, close stand of grass has been established, free of weeds and surface irregularities, with coverage exceeding 90 percent over any 10 sq. ft. and bare spots not exceeding 5 by 5 inches.
2. Satisfactory Sodded Turf: At end of maintenance period, a healthy, well-rooted, even-colored, viable turf has been established, free of weeds, open joints, bare areas, and surface irregularities.

B. Use specified materials to reestablish turf that does not comply with requirements, and continue maintenance until turf is satisfactory.

3.6 PESTICIDE APPLICATION

A. Apply pesticides and other chemical products and biological control agents according to requirements of authorities having jurisdiction and manufacturer's written recommendations. Coordinate applications with Owner's operations and others in proximity to the Work. Notify Owner before each application is performed.

B. Post-Emergent Herbicides (Selective and Nonselective): Apply only as necessary to treat already-germinated weeds and according to manufacturer's written recommendations.

3.7 CLEANUP AND PROTECTION

A. Promptly remove soil and debris created by turf work from paved areas. Clean wheels of vehicles before leaving site to avoid tracking soil onto roads, walks, or other paved areas.

B. Remove surplus soil and waste material, including excess subsoil, unsuitable soil, trash, and debris, and legally dispose of them off Owner's property.

C. Erect temporary fencing or barricades and warning signs as required to protect newly planted areas from traffic. Maintain fencing and barricades throughout initial maintenance period and remove after plantings are established.

D. Remove non-degradable erosion-control measures after grass establishment period.

3.8 MAINTENANCE SERVICE

A. Turf Maintenance Service: Provide full maintenance by skilled employees of landscape Installer. Maintain as required in "Turf Maintenance" Article. Begin maintenance immediately after each area is planted and continue until acceptable turf is established, but for not less than the following periods:

1. Sodded Turf: 30 days from date of Substantial Completion.

END OF SECTION 329200

SECTION 32 92 19
GRASSING (BY SEEDING)

1. GENERAL

1.1 DESCRIPTION OF WORK

A. Extent of work is indicated on drawings and includes but is not limited to:
   1) Ground preparation.
   2) Fertilization.
   3) Seeding.
   4) Hydro-seeding
   5) Rolling.
   6) Watering.

1.2 RELATED WORK

A. Section 30 00 00 - General Site Work Requirements
B. Section 31 20 00 - Earthwork
C. Section 31 23 16.13 - Earthwork for Utilities
D. Section 31 25 00 - Erosion Control and Environmental Protection

1.3 SUBMITTALS - comply with requirements of Section 30 00 00.

1.4 QUALITY ASSURANCE - comply with requirements of Section 30 00 00.

2. PRODUCTS

2.1 GRASS SEED - Comply with requirements of FDOT Section 570 and Section 981.

2.2 HYDRO-SEED - Product meeting requirements of FDOT and approved by Engineer.

2.3 MULCH - Comply with requirements of FDOT Section 570 and Section 981.

2.4 FERTILIZER - Comply with requirements of FDOT Section 570 and Section 982.

A. Use Type I fertilizer unless directed otherwise.

2.5 DOLOMITIC LIME - Comply with requirements of FDOT Section 570 and Section 982.

2.6 WATER - Comply with requirements of FDOT Section 570 and Section 983.

3. EXECUTION

3.1 EQUIPMENT - Comply with requirements of FDOT Section 570.

3.2 SEED MIX

A. Seed mixtures and applicability shall be in accordance with following table. Mixtures and applicability of seed types not included in table shall be determined by Engineer on a case by case basis.

A. The 18 inch planting mixture, when required, shall consist of a thorough mixture of 40% peat and 60% sand. The peat shall be Florihome peat or equivalent and the sand shall be clean and free from debris of any kind.

2.06 FERTILIZER

A. Fertilizer shall be pelletized 13-13-13, or approved equal.

PART 3 - EXECUTION

3.01 LANDSCAPING RESTORATION

A. Lawn Areas: Any lawn area affected by the required work shall be restored to a condition equal or better than the conditions existing before the commencement of work.

B. Balled Plants: Plants where required shall be adequately balled with firm natural balls of soil, sized as set forth in "Horticultural Standards." Balls shall be firmly wrapped with burlap or equally approved strong cloth. No balled plant will be planted if the ball is cracked or broken before or during the process of planting.

C. Preparation of Plant Pits: All plant pits shall be circular in outline and have vertical sides. Tree pits shall be two feet wider than the width of the ball and one foot deeper than the depth of the ball. Shrubs that are either B&B or 3 gallons + shall have pits that are two feet wider than the width of the plant ball and 6 inches deeper than the depth of the ball. Smaller shrubs shall have pits that are at least one foot wider than the width of the plant ball and 6 inches deeper than the ball depth.

D. Setting Plants: All plants except as otherwise specified, shall be centered in pits. Deep planting shall be avoided and unless otherwise specified, plants shall be set at such a level that after settlement they will bear the same relation to the required grade as they have to the natural grade before being transplanted.

E. Balled and burlapped plants and palm trees shall be placed on 6 inches to 12 inches of tamped planting mixture and adjusted so as to be at the proper level. The rope and burlap shall be cut away and the burlap folded down to the bottom of the pit. Very large B&B plants shall remain wrapped until fully backfilled and then just the upper portion of the burlap shall be removed. Backfill of planting mix shall be placed halfway up the pit and then water tamped. After this water has drained away, backfill around the ball to grade and water tamp again. Finally, form a ridge of soil around the edge of the pit to form a saucer and full area three times with water.

F. Water: Water to be used initially during plant installation shall be furnished by the CONTRACTOR. The existing irrigation system, where damaged, shall be promptly repaired after the installation of the plants.

G. Options as to Methods: Any plant may be furnished container grown instead of balled if all other requirements are met.

H. Immediately before sod is placed, 8-8-8 fertilizer shall be applied at the rate of approximately 500 pounds per acre, by broadcasting and raking into the planting area.

I. Sod shall be firmly embedded by light tamping. Wherever necessary to prevent an erosion condition caused by vertical edges at the outer limits of the sodded area, the sod shall be tamped so as to produce a featheredge at the outer limits. The sod shall be kept in a moist condition after it is planted. Water shall not be applied between the hours of 8 A.M., and 4 P.M., nor when there

SECTION 32 92 23
SODDING

1. GENERAL

1.1 DESCRIPTION OF WORK
A. Extent of work is indicated on drawings and includes but is not limited to:
   1) Ground preparation.
   2) Fertilization.
   3) Sodding.
   4) Watering.

1.2 RELATED WORK
A. Section 30 00 00 - General Site Work Requirements
B. Section 31 20 00 - Earthwork
C. Section 31 23 16.13 - Earthwork for Utilities
D. Section 31 25 00 - Erosion Control and Environmental Protection

1.3 SUBMITTALS - Comply with requirements of Section 30 00 00

1.4 QUALITY ASSURANCE - Comply with requirements of Section 30 00 00.

2. PRODUCTS

2.1 SOLID SOD - Comply with requirements of FDOT Section 575 and Section 981.

2.2 FERTILIZER - Comply with requirements of FDOT Section 575 and Section 982.

2.3 DOLOMITIC LIME - Comply with requirements of FDOT Section 575 and Section 982.

2.4 WATER - Comply with requirements of FDOT Section 575 and Section 983.

3. EXECUTION

3.1 GENERAL
A. Use of solid sod is conditioned on the time of year, weather and soil conditions. Do not sod when time of year, weather or soil conditions are inappropriate without authorization of Engineer. During dormant periods, consult with Engineer on use of alternative stabilization method. Engineer may direct use of seed & mulch, hydroseeding, hydromulch or any stabilization methods as contained in Section 31 25 00 as an alternative to solid sod.

3.2 PREPARATION OF GROUND
A. Scarify or loosen area to a suitable depth then rake smooth, free from rocks or stones.
   1) Engineer may authorize elimination of ground preparation for area where the soil is sufficiently loose.
   2) Correct soft spots and inequalities in grade.
   3) Schedule inspection by Engineer upon preparation of ground.
   4) Water soil before sod placement.
   5) Comply with requirements of Section 31 25 00.

3.3 FERTILIZATION - Comply with requirements of FDOT Section 575.

3.4 SOD PLACEMENT
A. General: Lay sod without voids and tamp or roll to required finish grade.
   1) Broom screen topsoil over entire area.
   2) Thoroughly water sod.

A. The 18 inch planting mixture, when required, shall consist of a thorough mixture of 40% peat and 60% sand. The peat shall be Florihome peat or equivalent and the sand shall be clean and free from debris of any kind.

2.06 FERTILIZER

A. Fertilizer shall be pelletized 13-13-13, or approved equal.

PART 3 - EXECUTION

3.01 LANDSCAPING RESTORATION

A. Lawn Areas: Any lawn area affected by the required work shall be restored to a condition equal or better than the conditions existing before the commencement of work.

B. Balled Plants: Plants where required shall be adequately balled with firm natural balls of soil, sized as set forth in "Horticultural Standards." Balls shall be firmly wrapped with burlap or equally approved strong cloth. No balled plant will be planted if the ball is cracked or broken before or during the process of planting.

C. Preparation of Plant Pits: All plant pits shall be circular in outline and have vertical sides. Tree pits shall be two feet wider than the width of the ball and one foot deeper than the depth of the ball. Shrubs that are either B&B or 3 gallons + shall have pits that are two feet wider than the width of the plant ball and 6 inches deeper than the depth of the ball. Smaller shrubs shall have pits that are at least one foot wider than the width of the plant ball and 6 inches deeper than the ball depth.

D. Setting Plants: All plants except as otherwise specified, shall be centered in pits. Deep planting shall be avoided and unless otherwise specified, plants shall be set at such a level that after settlement they will bear the same relation to the required grade as they have to the natural grade before being transplanted.

E. Balled and burlapped plants and palm trees shall be placed on 6 inches to 12 inches of tamped planting mixture and adjusted so as to be at the proper level. The rope and burlap shall be cut away and the burlap folded down to the bottom of the pit. Very large B&B plants shall remain wrapped until fully backfilled and then just the upper portion of the burlap shall be removed. Backfill of planting mix shall be placed halfway up the pit and then water tamped. After this water has drained away, backfill around the ball to grade and water tamp again. Finally, form a ridge of soil around the edge of the pit to form a saucer and full area three times with water.

F. Water: Water to be used initially during plant installation shall be furnished by the CONTRACTOR. The existing irrigation system, where damaged, shall be promptly repaired after the installation of the plants.

G. Options as to Methods: Any plant may be furnished container grown instead of balled if all other requirements are met.

H. Immediately before sod is placed, 8-8-8 fertilizer shall be applied at the rate of approximately 500 pounds per acre, by broadcasting and raking into the planting area.

I. Sod shall be firmly embedded by light tamping. Wherever necessary to prevent an erosion condition caused by vertical edges at the outer limits of the sodded area, the sod shall be tamped so as to produce a featheredge at the outer limits. The sod shall be kept in a moist condition after it is planted. Water shall not be applied between the hours of 8 A.M., and 4 P.M., nor when there

SECTION 33 05 07
DIRECTIONAL BORES

PART 1 - GENERAL

1.01 DESCRIPTION OF WORK

A. The extent of directional boring is shown on the drawings.

B. The work included in this section covers the installation of carrier pipe by the directional boring (trenchless installation) method as described herein, within the limits indicated on the drawings. In general, include bore pit, pilot hole (as required), drilling fluids, carrier pipe, removal and disposal of drilling fluids and soil cuttings, soil reports as required by jurisdictional agencies beyond those already provided by the Owner, siltation and sediment control, and all other work required to install the carrier pipe as specified herein and as shown on the drawings.

C. The Contractor will furnish all labor, equipment, materials and supplies and will perform all work necessary to provide Owner with a complete, finished reclaimed water and sewer force main crossing via horizontal directional drilling.

D. The proposed profile and grade of the fiber optic conduit is the responsibility of the contractor. All existing utility locations (horizontal and vertical) within the proposed alignment shall be confirmed by the contractor prior to drilling. Contractor is responsible for any damage to the existing utilities during work.

E. The Contractor shall have an FDOT inspector on the job site for all directional bores crossing a state highway.

F. Contractor must also conform to the FDOT Specification on Directional Boring. A copy of this specification can be found in Appendix D of these Specifications.

1.02 DESIGN/PERFORMANCE REQUIREMENTS

A. Provide design engineering for the work as described in paragraph 1.2 and as described herein and on the contract drawings, including, but not limited to, the following elements:

1. Bore hole diameter and length,

2. Location of borehole entry and exit points,

3. Drilling procedures,

4. Pipeline pulling operations,

5. Method of drilling fluid disposal,

6. Area required for drilling operations and storage of pipe,

7. Drilling fluids management plan, and

8. Review of plan and profile drawings and proposed horizontal and vertical alignment of the pipeline, with written certification of agreement with them, or recommended departure from them.

B. The Contractor's submitted design shall be signed and sealed by a Professional Engineer whose specialty includes design of horizontal drilling operations. The cost of these engineering services will be included in the bid price.

C. The Contractor shall be responsible for conducting the job in accordance with all applicable federal, state and local permits, codes and statutes.

1.03 SUBMITTALS

A. Drawings:

1. Working drawings showing in detail the size and location of boring pits together with all sheeting and shoring to be used in supporting embankments and trench walls, and any other details of the proposed methods of installation required to allow adequate review by the engineer.

2. The Contractor shall prepare a drilling plan indicating equipment proposed for each location, pull-back forces anticipated and shall verify that the DR of the pipe specified is adequate to withstand the anticipated pull-back forces in addition to the earth, line and groundwater loads.

B. Shop Drawings:

1. Complete layout and details for fabrication and installation of pipeline; including design data and calculations.

2. Submittal shall include, but not be limited to, elements listed in the above Design/Performance Requirements paragraph.

C. Task Schedule:

1. Detailed schedule of tasks for each stage or operation involved in the work of this section. Include as a minimum the following major tasks:

a) Preparatory earthwork operations,

b) Drilling rig mobilization and set-up,

c) Pipe delivery and on-site pipe joining operations,

d) Pilot hole drilling and reaming operations,

e) Pipeline pulling operations,

f) Pipeline hydrostatic testing,

g) Drilling fluid disposal, and

h) Restoration and demobilization.

2. Task Schedule shall conform to contract schedule as outlined in the General Provisions.

3. On completion of pilot hole phase of each drill site, a complete set of "as-built" records shall be submitted in duplicate to the Engineer. These records shall include copies of the plan and profile drawing, as well as directional survey reports as recorded during the

drilling operation. Upon completion drawings shall be submitted to the engineer in ACAD 2000 file format.

4. Technical data of equipment to be utilized.

5. Prior to approval, submit the names of supervisory field personnel and historical information of directional boring experience.

6. Submit MSDS (Material Safety Data Sheets) information for the drilling slurry compounds.

D. Disposal Plan:

1. The plan shall describe the Contractor's plans for disposal of the drilling fluid and the names, addresses and telephone numbers of any and all subcontractors who will be performing any portion of the disposal activities.

2. At a minimum the plan shall include:

a) Disposal method,

b) Disposal hauler(s),

c) Disposal locations,

d) Estimated quantity to be disposed,

e) Type of vehicle hauling drilling fluids,

f) Signed statement that all hauling equipment (ie., vehicle, tanker, dump truck, trailer, etc.) meets all requirements of state agencies, and

g) Letter from proposed disposal site(s) accepting material.

E. Erosion Control Plan:

1. The erosion control plan shall be submitted prior to the preconstruction conference.

2. It shall be a written, detailed plan for the accomplishment of acceptable erosion control on the project.

3. The plan shall describe all necessary temporary measures to be implemented for preventing soil erosion from the construction site until permanent erosion control and finished surfaces are installed.

4. The plan shall comply with all state and local requirements.

F. Pipe Connection Procedures:

1. The Contractor shall submit pipe connection procedures to the Engineer prior to connecting any pipe.

2. For plastic (HDPE) pipe, the Contractor shall submit the pipe manufacturer's representative's written approval of his procedures.

1.04 PERMITS

A. N/A

1.05 QUALITY ASSURANCE

A. Crossings must conform to applicable requirements of all utility companies affected, State Highway Department, and environmental agencies.

B. Qualifications:

1. The Contractor shall be thoroughly experienced in the type construction contemplated herein.

C. References:

1. The Contractor must demonstrate expertise in trenchless methods by providing a list of five references for which similar work has been performed within the last two years.

2. Two of the references shall be from projects where the SAME SIZE OR LARGER pipe than the largest carrier pipe specified in the contract documents was successfully installed at a linear distance greater than or equal to the longest bore required by the contract documents.

3. The references shall include a name and telephone number where contact can be made to verify capability.

4. The subcontractor must provide documentation showing successful completion of the projects used for reference.

5. Conventional trenching experience will not be considered applicable.

D. Mandrel:

1. Upon completion of carrier pipe installation, Contractor shall pass a mandrel through the entire length of the bore in the presence of the Owner's representative to inspect for roughness and necking.

2. Mandrel shall not be more than 2-inches in diameter smaller than the ID of the carrier pipe installed.

3. Mandrel and towrope shall be constructed of materials that will not scar or harm the carrier pipe in any manner.

E. Pipe Manufacturer's Quality Control:

1. The pipe manufacturer shall have an ongoing Quality Control program for incoming and outgoing materials.

2. High-density polyethylene (HDPE) resins for manufacturing of pipe shall be checked for density, melt flow rate, and contamination.

3. These incoming resins shall be approved by NSF before being converted to pipe.

4. Pipe shall be checked for outside diameter, wall thickness, length, roundness, and surface

finish on the inside and outside and end cut.

F. Fittings Manufacturer's Quality Control:

1. The fitting manufacturer shall have an on-going quality control program for incoming and outgoing materials.

2. Molded fittings shall be inspected for voids and knit lines.

3. All fabricated fittings shall be inspected for joint quality and alignment.

4. All fabricated fitting welds shall be made using a Data Logger.

5. A record of the temperature, pressure and graph of the fusion cycle shall be maintained by the fitting manufacturer.

1.06 PRODUCT DELIVERY, STORAGE, AND HANDLING

A. The pipe and fitting manufacturer shall package products for shipment in a manner suitable for safe transport on commercial carriers.

B. When delivered, a receiving inspection shall be performed, and any shipping damage reported to the pipe and fittings manufacturer.

C. Pipe and fittings shall be handled, installed, and tested in accordance with manufacturer's recommendations and the requirements of this specification.

D. Deliver and store materials within limits of rights-of-way and/or property lines as shown on the drawings as directed by the owner.

E. The Contractor shall be responsible for securing all project materials and shall bear the cost of replacing any materials which may become misplaced or stolen.

1.07 JOB CONDITIONS

A. The Contractor shall be held fully responsible for protecting against surface subsidence, damage, or disturbance of adjacent property and facilities from his construction methods.

B. Each directional boring crew shall have a reasonable proportion of experienced men.

C. A superintendent and/or engineer experienced in directional boring methods and techniques, and who represents the boring contractor, shall be present at all times while work is proceeding. He shall also be responsible for the frequent checking of line and grade, if needed. Tolerances should be agreed to in the light gradient and easement requirements.

D. Contractor shall be held responsible for the coordination and scheduling of all construction work.

1.08 SAFETY

A. All drilling equipment must have a permanent, inherent alarm system capable of detecting an electrical current.

B. The ground system shall be equipped with an audible alarm to warn the operator when the drill head nears electrified cable.

C. All crews shall be provided with grounded safety mats, heavy gauge ground cables with connectors, and hot boots and gloves.

D. All supervisory personnel must be adequately trained and have direct supervisory experience in directional boring.

PART 2 - PRODUCTS

2.01 MATERIALS

A. Drilling fluid shall be a gel-forming colloidal fluid consisting of at least 10% of high-grade bentonite, which is totally inert and contains no environmental risk, or equal.

B. Carrier Pipe:

1. Pipe and fittings shall be high-density polyethylene manufactured from NSF approved PLEXCO P34CH compound, PE 3408, or equal.

2. Pipe shall meet AWWA C-906, PE Pressure Pipe and Fittings 4" – 53" for Distribution and be marked with the NSF-pw logo.

3. Hydrostatic design stress (HDS) shall be 800 psi at 73.4°F with a minimum pipe DR of 11 and operating pressure of 200 psi at 73.4°F.

4. Pipe and fittings shall be produced by the same manufacturer from identical materials meeting the requirements of this specification.

5. Molded fittings shall meet the requirements of ASTM D-3261 and this specification. At the point of fusion, the outside diameter and minimum wall thickness of fitting butt fusion outlets shall meet the outside diameter and minimum wall thickness specifications of ASTM F-714 for the same size of pipe.

6. Pipe shall be manufactured in accordance with ASTM F-714, ASTM D-3035, or the applicable dedicated service specification. Print line markings shall include a production code from which the location and date of manufacture can be identified. Upon request, the manufacturer shall provide an explanation of his production code.

C. Pipe Marking:

1. HDPE color coding shall be in accordance with the marking requirements specified herein.

D. Acceptable Pipe Manufacturer:

1. Performance Pipe, Driscoplex 4000, PE 3408, AWWA C-906, DIPS sizing, Richardson TX, (800) 527-0662; Supplier: ISCO Industries, Grand Bay, AL, 1-800-345-4726, or engineer approved equal.

E. Butt fusion Fittings:

1. HDPE fittings shall be PE 3408 HDPE, Cell Classification of 345464C as determined by ASTM D3350-99, and approved for AWWA use.

2. Butt fusion fittings shall have a manufacturing standard of ASTM D3261.

3. Molded and fabricated fittings shall have a pressure rating equal to the pipe unless

otherwise specified in the plans.

4. Fabricated fittings are to be manufactured using Data Loggers.

5. Temperature, fusion pressure and a graphic representation of the fusion cycle shall be part of the Quality Control records.

6. All fittings shall be suitable for use as pressure conduits, and per AWWA C906, have nominal burst values of three and one-half times the working pressure rating of the fitting.

F. Transition Fittings:

1. Terminate all HDPE pipe with fusion welded flanges (125 lb bolt pattern). See paragraph above for alternate fusion procedures.

2.02 EQUIPMENT

A. Directional Drilling Equipment:

1. General:

a. The directional drilling equipment shall consist of a directional drilling rig of sufficient capacity to perform the bore and pull back the pipe, a drilling fluid mixing, delivery and recovery system of sufficient capacity to successfully complete the installation, a drilling fluid recycling system to remove solids from the drilling fluid so that the fluid can be reused (if required), a magnetic guidance system or walk over system to accurately guide boring operations, a vacuum truck of sufficient capacity to handle the drilling fluid volume, trained and competent personnel to operate the system.

b. All equipment shall be in good, safe condition with sufficient supplies, materials and spare parts on hand to maintain the system in good working order for the duration of this project.

2. Drilling Rig:

a. The directional drilling machine shall consist of a hydraulically powered system to rotate and push hollow drilling pipe into the ground at a variable angle while delivering a pressurized fluid mixture to a guidable drill (bore) head.

b. The machine shall be anchored to the ground to withstand the pulling, pushing and rotating pressure required to complete the installation.

c. The hydraulic power system shall be self-contained with sufficient pressure and volume to power drilling operations.

d. Hydraulic system shall be free of leaks. Rig shall have a system to monitor and record maximum pullback pressure during pullback operations.

e. There shall be a system to detect electrical current from the drill string and an audible alarm which automatically sounds when an electrical current is detected.

3. Drill Head:

a. The drill head shall be steerable by changing its rotation and shall provide

necessary cutting surfaces and drilling fluid jets.

B. Guidance System:

1. General:

a. An electronic walkover tracking system or a Magnetic Guidance System (MGS) probe or proven gyroscopic probe and interface shall be used to provide a continuous and accurate determination of the location of the drill head during the drilling operation.

b. The guidance shall be capable of tracking at all depths up to 50 feet and in any soil condition, including hard rock.

c. It shall enable the driller to guide the drill head by providing immediate information on the tool face, azimuth (horizontal direction), and inclination (vertical direction).

d. The guidance system shall be accurate and calibrated to manufacturer's specifications of the vertical depth of the borehole at sensing position at depths up to fifty feet and accurate to 2-feet horizontally.

2. Components:

a. The Contractor shall supply all components and materials to install, operate, and maintain the guidance system.

3. The guidance System shall be of a proven type, and shall be set up and operated by personnel trained and experienced with the system.

4. The operator shall be aware of any geo-magnetic anomalies and shall consider such influences in the operation of the guidance system.

2.03 JOINING METHODS

A. Butt fusion joining:

1. Plain end pipe and fittings shall be made using butt fusion.

2. The butt fusion procedures shall be in accordance with the manufacturer or the PPI.

3. The fusion equipment operator shall receive training using the recommended procedure.

4. The Contractor shall be responsible to verify that the fusion equipment is in good operating condition and that the operator has been trained within the past twelve months.

5. The fusion equipment shall be equipped with a Data Logger. Records of the welds (heater temperature, fusion pressure, and a graph of the fusion cycle) shall be maintained for 5 years.

6. Fusion beads shall not be removed.

B. Mechanical Joining:

1. Polyethylene pipe and fittings may be joined together using flanges or mechanical joint

adapters.

2. These fittings shall be made from PE 3048 HDPE, with a Cell Classification of 345464C as determined by ASTM D3350-99.

3. Flanged and MJ adapters shall have a manufacturing standard of ASTM D3261.

4. They shall have a pressure rating equal to the pipe unless otherwise specified on the plans.

C. Electrofusion couplings:

1. Polyethylene pipe and fittings may be joined using approved electrofusion couplings.

2. Fittings shall be PE 3408 HDPE, Cell Classification of 345464C as determined by ASTM D3350-99.

3. Electrofusion fittings shall have a manufacturing standard of ASTM F1055.

4. Fittings shall have a pressure rating equal to the pipe unless otherwise specified on the plans.

5. All electrofusion fittings shall be suitable for use as pressure conduits, and per AWWA C906, have nominal burst values of three and one-half times the working pressure rating of the fitting.

PART 3 - EXECUTION

3.01 EXECUTION

A. The Utility bore depth will equal or exceed 10 times the bore size. The Contractor shall be responsible for setting all grade stakes, lines, and levels.

B. Coordinate the locations of underground utilities with appropriate companies. Advise Engineer immediately if conflict exists.

C. Contractor shall operate and maintain all equipment as required to keep the work free from excessive spoil and environmental risks.

D. N/A

E. The Contractor shall perform the necessary general earthwork operations as required for the directional drilling and pipe pulling operations.

F. The Contractor shall be responsible for restoring all areas impacted by contractors work effort to pre-work conditions. The Contractor shall be responsible for constructing all means of temporary access to the designated work sites and shall be liable for all damages caused as a result of the work.

3.02 INSTALLATION

A. Installation shall be in a trenchless manner producing continuous bores. The entry point shall be where shown on the plan submitted as required in 1.2 above. The exit point for the drilled hole shall be within 10 feet laterally and within 20 feet longitudinally of where shown on the plan submitted as required in 1.2 above. No exception to this requirement will be allowed.

B. The tunneling system shall be remotely steerable and permit electronic monitoring of tunnel depth

and location.

C. Tunneling must be performed by a fluid-cutting process (high pressure-low volume) utilizing a liquid clay, i.e., bentonite. The clay lining will maintain tunnel stability and provide lubrication in order to reduce frictional drag while the pipe is being installed. In addition, the clay fluid must be totally inert and contain no environmental risk.

D. The Contractor must also have a mobile vacuum spoils recovery vehicle on site to remove the drilling spoils from the access pits. The spoils must then be transported from the job site and be properly disposed of. Under no circumstances will the drilling spoils be permitted to be disposed of into sanitary, storm, or other public or private drainage systems.

E. Mechanical, pneumatic, or water-jetting methods will be considered unacceptable due to the possibility of surface subsidence.

F. After an initial bore has been completed, a reamer will be installed at the termination pit and the pipe will be pulled back to the starting pit. The reamer must also be capable of discharging liquid clay to facilitate the installation of the pipe into a stabilized and lubricated tunnel.

G. The Contractor shall provide all material, equipment, and facilities required for directional drilling. Proper alignment and elevation of the borehole shall be consistently maintained throughout the directional drilling operation. The method used to complete the directional drill shall conform to the requirements of all applicable permits.

H. The entire drill path shall be accurately surveyed with entry and exit stakes placed in the appropriate locations within the areas indicated on drawings. If Contractor is using a magnetic guidance system, drill path will be surveyed for any surface geo-magnetic variations or anomalies.

I. Contractor shall place silt fence between all drilling operations and any drainage, well-fields, wetland, waterway or other area designated for such protection necessary by documents, state, federal and local regulations. Additional environmental protection necessary to contain any hydraulic or drilling fluid spills shall be put in place, including berms, liners, turbidity curtains and other measures. Fuel may not be stored in bulk containers within 200 feet of any water body or wetland.

J. Readings shall be recorded after advancement of each successive drill pipe, (no more than 15') and the readings plotted on a scaled drawing of 1" = 5', both vertical and horizontal. Access to all recorded readings and plan and profile information shall be made available to the Engineer, or his representative, at all times. At no time shall the deflection radius of the drill pipe exceed the deflection limits of the carrier pipe as specified herein.

K. A complete list of all drilling fluid additives and mixtures to be used in the directional operation will be submitted to the Engineer, along with their respective Material Safety Data Sheets. All drilling fluids and loose cuttings shall be contained in pits or holding tanks for recycling or disposal, no fluids shall be allowed to enter any unapproved areas or natural waterways. Upon completion of the directional drill project, the drilling mud and cuttings shall be disposed of by the Contractor at an approved dumpsite.

L. The pilot hole shall be drilled on bore path with no deviations greater than 5% of depth over a length of 100-feet. In the event that pilot does deviate from the bore path more than 5-feet of depth in 100-feet, Contractor will notify Engineer and Engineer may require Contractor to pullback and re-drill from the location along bore path before the deviation. In the event that a drilling fluid fractures, inadvertent returns or returns loss occurs during pilot hole drilling operations, Contractor shall cease drilling, wait at least 30 minutes, inject a quantity of drilling fluid with a viscosity exceeding 120 seconds as measured by a March funnel and wait another 30 minutes. If mud fracture or returns loss

continues, Contractor will discuss additional options with the Engineer and work will then proceed accordingly.

M. Flange/MJ Adapter Installation: Flanges/MJ Adapters shall be attached to pipe and fittings using butt fusion. The flanges/MJ adapters shall be aligned and centered relative to the pipe. Flanges/MJ adapters should be square with the valve or other flange before tightening of bolts. Bolts should not be used to draw flanges into alignment. Bolt threads shall be lubricated, and flat washers shall be used under flange nuts. Bolts shall be tightened using a "star tightening pattern". See manufactures recommendations. Twenty-four hours after first tightening the flange bolts, they must be re-tightened using the same "star tightening patter" used above. The final tightening torque shall be as indicated by the manufacturer.

N. On each day butt fusions are to be made, the first fusion of the day shall be a trial fusion. The trial fusion shall be allowed to cool completely, then fusion test straps shall be cut out. The test strap shall be 12" or 30 times the wall thickness in length (minimum) and 1" or 1.5 times the wall thickness in width (minimum). Bend the test strap until the ends of the strap touch. If the fusion fails at the joint, a new trial fusion shall be made, cooled completely and tested. Butt fusion of pipe to be installed shall not commence until a trial fusion has passed the bent strap test.

O. Socket and saddle fusions shall be tested by a bent strap test as described by the pipe manufacturer. The pipe manufacturer shall provide visual guidelines for inspecting the butt, saddle and socket fusions joints.

P. The Contractor shall be liable for retrieving or sealing any pipe that becomes lodged in the drill hole.

3.03 PIPE PULLING OPERATIONS

A. The full length of the pipe to be installed shall be laid out, welded and tested in one complete unit before being pulled back through the drilled hole. Once started, pipeline pullback shall be continuous unless approved otherwise in writing by the Owner or Owner's designated representative.

B. The pulling head shall be designed by the Contractor to withstand the continuous tensile pull stresses with intermittent sudden occasional surges. The Contractor shall be responsible for determining the pulling loads.

C. The pipe shall be continuously lubricated with a bentonite slurry and the assembled pipeline shall be laid on rollers, or other apparatus, to facilitate pullback and prevent damage to pipe.

D. The Contractor shall continue pull back until 10 linear feet (minimum) of pipe is above ground for the purpose of pipe inspection.

E. A blind flange shall be bolted to the fusion welded flange and the pipe shall be marked and buried with a minimum cover of 36-inches. Connections, which will be made under another contract, will require the removal of the blind flange and a flanged ductile iron adapter shall be bolted to the fusion welded flange suitable for the transitional material. Provide restrained joints or Megalug joint restraint as required.

3.04TESTING

A. In addition to the water system testing requirements specified for the entire system, the Contractor shall conduct a low pressure air test of the HDPE reclaimed water and sewer force main above ground prior to pullback as follows:

1. Secure and brace ends of pipe to be tested.

2. Provide calibrated low range air pressure gauge on high end of pipe.

3. Fill pipe to maximum pressure of 20.0 psig. Add air as necessary to compensate for internal/external pipe temperature and initial pipe expansion. Check all pipe joints and test fittings with mild soap solution. Repair or replace all leaking joints, pipe and/or fittings.

4. Once air pressure has stabilized, pipe should hold constant air pressure for two hours. If pipe does not hold pressure, check all joints and test fittings with soap solution.

5. Repair or replace sources of leakage and completely retest entire section.

B. In addition to the water system testing requirements specified for the entire system, the Contractor shall conduct a hydrostatic test of the HDPE reclaimed water and sewer force main in-ground after pullback as follows:

1. Flush the HDPE main with potable water to remove any sediment, solids and/or foreign material prior to any in place testing. Then, fill the pipe with potable water and after all free air is removed from the test section, raise the pressure at a steady rate to the required pressure. The pressure in the section shall be measured with calibrated pressure gauges at each end of the pipe section.

2. Test pressure shall be 150 psi. The initial pressure test shall be applied and allowed to stand without makeup water for a sufficient time to allow for diametric expansion or pipe stretching to stabilize. This usually occurs within 2-3 hours. After this equilibrium period, the test section can be returned to 150 psi operating pressure, the pump turned off, and a final test pressure held for three hours.

3. Immediately following the pressure test, the results shall be furnished to the Engineer or Inspector. Leaking pipes that cannot be repaired to meet pressure test must be removed, filled with concrete, or otherwise placed out of service.

3.05 DAMAGED OR IMPROPERLY INSTALLED PIPE

A. If the pipe is damaged before installation, or does not meet the specifications, it shall be replaced at no expense to the Owner. If the pipe is damaged during installation by the Contractor's operations, placed at the improper grade or line, or cannot be advanced because of an unseen obstruction or any other reason, it shall, at the discretion of the Engineer, be retrieved or abandoned in place and the void filled with concrete by pressure grouting as soon as possible. If it becomes necessary to drill another hole, an alternate installation shall be made as directed by the Engineer.

B. The Contractor shall re-drill the hole and furnish all additional labor and materials required to complete the job as indicated on the plans and specifications at no additional cost to the Owner. The cost for retrieval or abandonment of pipe shall be at the expense of the Contractor. No additional payment shall be made for pipe which is retrieved, abandoned, or damaged beyond use, including dewatering, excavation, drilling, backfilling, etc.

C. Sections of pipe having been discovered with cuts or gouges in excess of 10% of the pipe wall thickness shall be cut out and removed. The undamaged portions of the pipe shall be rejoined using one of the joining methods allowed in the Section.

END OF SECTION

SECTION 33 11 10
WATER DISTRIBUTION SYSTEM

1. GENERAL

1.1 DESCRIPTION OF WORK
A. Extent of work is indicated on drawings and includes but is not limited to:
   1) Water mains.
   2) Appurtenances.
   3) Service laterals.

1.2 RELATED WORK
A. Section 30 00 00 - General Site Work Requirements
B. Section 31 23 16.13 - Earthwork for Utilities
C. Section 32 05 23 - Concrete for Site Work

1.3 SUBMITTALS - comply with requirements of Section 30 00 00.

1.4 QUALITY ASSURANCE - comply with requirements of Section 30 00 00.

2. PRODUCTS

2.1 GENERAL
A. Use materials in accordance with material standard and applicable laws, ordinances and codes.
B. Materials to be new, unused and correctly designed and of standard first grade quality intended for use.
C. Materials to be certified in accordance with ANSI/NSF 61.
D. Do not use materials or equipment which are inferior or of a lower grade than indicated, specified or required.

2.2 WATER MAINS
A. General: Type to be as shown on drawings or approved.
B. Marking: Pipe and tubing to be marked as prescribed in referenced AWWA and ASTM specifications.

2.3 DUCTILE IRON PIPE (DIP)
A. Pipe: Ductile iron pipe in accordance with AWWA C-150 and C-151, in nominal 18 or 20 foot laying lengths.
   1) Except as noted hereafter or shown otherwise on the drawings, use minimum pressure class 150 pipe.
      (a) For systems to be dedicated to a local municipality, verify and use pressure class as required by entity.
      (b) For private systems which provide fire flow to a building fire sprinkler system use minimum pressure class 200 pipe.
B. Joints: Joints may be push-on, mechanical or flanged type as shown on the drawings. Above ground piping to be flanged joint. Joint accessories to be furnished with pipe.
   1) Push-on type joints to be bell & spigot gasketed joints in accordance with AWWA C-111.
   2) Mechanical joints to be a bolted joint of the stuffing-box type in accordance with AWWA C-111.
   3) Flanged joints to be in accordance with AWWA C-110.

2.4 POLYVINYL CHLORIDE PIPE (PVC) - SMALLER THAN 4 INCHES
A. Pipe: SDR 21 pipe with a minimum pressure rating of 200 psi as manufactured in accordance with ASTM D-2241.
   1) Pipe color to be blue for potable water and purple for reclaimed water.
B. Joints: “Push-on” joints in accordance with ASTM D-3139.
   1) Glued joint pipe will not be allowed.
C. Gaskets: Use elastomeric gaskets in accordance with ASTM F-477.

2.5 POLYVINYL CHLORIDE PIPE -4 INCHES THROUGH 12 INCHES

A. Pipe: Use pipe manufactured in accordance with AWWA C-900, latest edition.
   1) Except as noted hereafter or shown otherwise on the drawings, use DR 18, pressure class 235 pipe.
      (a) For systems to be dedicated to a local municipality, verify and use pressure class as required by entity.
   2) Pipe color to be blue for potable water and purple for reclaimed water.
B. Joints: Joints may be push-on or mechanical type as shown on the drawings. Joint accessories to be furnished with the fitting.
   1) Push-on type joints to be bell & spigot gasketed joints in accordance with ASTM D-3139.
   2) Mechanical joints to be a bolted joint of the stuffing-box type in accordance with AWWA C-111.
C. Gaskets: Use gaskets in accordance with ASTM F-477.

2.6 POLYVINYL CHLORIDE (PVC) PIPE -14 INCHES THROUGH 48 INCHES

A. Pipe: Use pipe manufactured in accordance with AWWA C-905, latest edition.
   1) Except as noted hereafter or shown otherwise on the drawings, use DR 21, pressure class 200 pipe.
      (a) For systems to be dedicated to a local municipality, verify and use pressure class as required by entity.
   2) Pipe color to be blue for potable water and purple for reclaimed water.
B. Joints: Joints may be push-on or mechanical type as shown on the drawings. Joint accessories to be furnished with the fitting.
   1) Push-on type joints to be bell & spigot gasketed joints in accordance with ASTM D-3139.
   2) Mechanical joints to be a bolted joint of the stuffing-box type in accordance with AWWA C-111.
C. Gaskets: Use gaskets in accordance with ASTM F-477.

2.7 MOLECULARLY ORIENTED POLYVINYL CHLORIDE (PVCO) PIPE -6 INCHES THROUGH 12 INCHES

A. Pipe: Use pipe manufactured in accordance with AWWA C-909, latest edition.
   1) Except as noted hereafter or shown otherwise on the drawings use minimum pressure class 200 pipe.
      (a) For systems to be dedicated to a local municipality, verify and use pressure class as required by entity.
   2) Pipe color to be blue for potable water and purple for reclaimed water.
B. Joints: Joints may be push-on or mechanical type as shown on the drawings. Joint accessories to be furnished with the fitting.
   1) Push-on type joints to be bell & spigot gasketed joints in accordance with ASTM D-3139.
   2) Mechanical joints to be a bolted joint of the stuffing-box type in accordance with AWWA C-111.
C. Gaskets: Use gaskets in accordance with ASTM F-477.

2.8 POLYETHYLENE (PE) TUBING –SMALLER THAN 4 INCHES

A. Tubing: Use pipe manufactured in accordance with AWWA C-901, latest edition.
   1) Except as noted hereafter or shown otherwise on the drawings, use minimum pressure class 200 pipe.
      (a) For systems to be dedicated to a local municipality, verify and use pressure class as required by entity.
   2) Pipe color to be co-extruded blue striped for potable water and purple striped for reclaimed water.
B. Joints: Tubing to be continuous and joints will not be allowed without approval of Engineer.

2.9 POLYETHYLENE (PE) 4 INCHES THROUGH 63 INCHES

A. Pipe: Use pipe manufactured in accordance with AWWA C-906, latest edition.
   1) Except as noted hereafter or shown otherwise on the drawings, use minimum pressure class 160 pipe.
      (a) For systems to be dedicated to a local municipality, verify and use pressure class as required by entity.
      (b) For private systems which provide fire flow to a building fire sprinkler system, use minimum pressure class 200 pipe.
   2) Pipe color to be co-extruded blue striped for potable water and purple striped for reclaimed water.

B. Joints: Joints may be fused, flanged or mechanical type or as shown on the drawings. Joint accessories to be furnished with the fitting.
   1) Fused joints to be in accordance with manufacturer's recommendations.
   2) Flanged joints to be in accordance with AWWA C-207.
   3) Mechanical joints to be a bolted joint of the stuffing-box type in accordance with AWWA C-111.
C. Gaskets: Use gaskets in accordance with ASTM F-477.

2.10 STEEL PIPE
A. Steel pipe to be schedule 40 galvanized steel in accordance with ASTM A120.
B. Joints to be threaded.

2.11 FITTINGS 3 INCHES AND LARGER
A. General: Ductile iron fittings in accordance with AWWA C-110/A21.10 or C-153/A21.53 with a minimum pressure rating of 350 psi.
B. Coating: Use cement mortar lined and coated fittings in accordance with AWWA C-104.
C. Anchoring Devices: Ductile iron devices in accordance with ANSI/AWWA C-110, and/or C-111.
   1) Use sufficient number of set screws to restrain thrust at rated pressure without need for additional restraint.
D. Retainer Glands: Use Clow F-1058, American Cast Iron Pipe Co. M.J. Retainer Glands, EBAA Series 1200, NAPPCO Series 460, and Columbus Standard M.J. Retainer Glands, EBAA iron wedge action megalug, or an approved equal.
E. Push-on joint restraints to be similar to EBAA iron, series 800, or approved equal.
F. Coatings: Coatings to be as follows:
   1) Flange adapters to be provided with a painted "shop coat".
   2) Retainer glands to be provided with a bituminous coat.
   3) Push-on restraints to be provided with a bituminous coat.

2.12 FITTINGS SMALLER THAN 3 INCHES
A. General: Comply with requirements of AWWA C-800.
   1) Use stainless steel inserts at all fittings in polyethylene tubing. Comply with requirements of AWWA C-901.

2.13 PRECAST THRUST BLOCKS
A. General: Precast concrete thrust blocks manufactured to provide minimum dimensions and construction shown on plans and subject to approval by Engineer.
B. Concrete: Refer to applicable Division-30 specifications.

2.14 BACKFLOW PREVENTERS
A. General: Backflow preventers in accordance with AWWA C-506.
   1) Type and make to be as acceptable to local municipality.
   2) Devices to be tested and certified in accordance with requirements of the local municipality.
B. Piping Leads:
   1) 0 inches to 3 inches: Galvanized steel in accordance with requirements contained herein.
   2) 3" and greater: Ductile iron in accordance with requirements contained herein.
C. Strainers: All backflow preventers to be supplied with a strainer.

2.15 FIRE HYDRANTS
A. General: Post type dry-barrel hydrants in accordance with AWWA C-502 and approved by fire department or utility.
   1) The local municipality approved hydrant models are American Darling B-84-B, Mueller Centurion, M&H A-129, and Clow Medallion.
B. Type: Traffic rated compression type capable of opening against line pressure.
   1) Main valve to remain closed should hydrant be broken off above ground.
C. Pressure Rating: Hydrant to be rated at 150 psi working pressure and 300 psi hydrostatic pressure.
D. Size: 5-1/4 inch main valve, one 4-1/2 inch pumper nozzle and two 2-1/2 inch hose nozzles.
E. Auxiliary Valve: Supply with an auxiliary gate valve in accordance with requirements contained herein.

2.16 GATE AND TAPPING VALVES

A. General: Resilient seated in accordance with AWWA C-509 and following supplemental requirements:
   1) Valves 12 inches and smaller to be bubble-tight at 200 psi water working pressure.
   2) Test pressure to be twice rated working pressure and at all times zero leakage will be maintained.
   3) Class B gray iron body, non-rising stem suitable for buried vertical mounting.
      (a) Non-rising stem in accordance with AWWA specifications with cast integral stem collar and furnished of bronze conforming to ASTM B132 Alloy A.
      (b) Stem nuts to be independent of wedge and of solid bronze conforming to ASTM B-62.
   4) Sealing mechanism to be either a replaceable internally reinforced, specially contoured, molded rubber disc seat ring attached to face of disc with self-locking stainless steel screws or a sealing surface permanently bonded with resilient material to meet ASTM D-429.
   5) Replaceable seat rings to be designed to prevent improper installation
   6) Stuffing boxes to be o-ring seal type with two rings located in stem.
   7) Low friction torque reduction thrust bearings to be located both above and below stem collar.
   8) Valves to open by turning a two inch square AWWA operating nut clockwise.
B. Joints: Joints to conform with requirements for pipe.
C. All valves to be furnished with operating nuts.
D. All tapping valves to be interchangeable with other makes of tapping sleeves.

2.17 TAPPING SLEEVES

A. General: Heavy gray cast iron, ductile cast iron or high strength steel and in two halves.
B. Joints: Tapping sleeves to seal to pipe by use of a confined o-ring gasket able to withstand a pressure test of 150 psi with no leakage in accordance with AWWA C-110.
   1) A 3/4 inch NPT test plug to be provided for pressure testing.
   2) Outlet branch flange suitable for attachment by all makes of tapping valves meeting AWWA standards.

2.18 TAPPING SADDLES

A. General: Heavy gray cast iron or ductile cast iron, high strength steel, or brass with attachment straps and hardware.
B. Straps: 2 straps of stainless steel, brass, or corrosion resistant alloy steel in accordance with AWWA C-111.
C. Bands: Stainless steel.
D. Joints: Tapping saddles to seal to pipe by use of a confined o-ring gasket able to withstand a pressure test of 150 psi with no leakage in accordance with AWWA C-110.

2.19 COATINGS

A. Ductile iron pipe and fittings: Interior cement-mortar lining and exterior coal tar epoxy coating.
   1) Cement-mortar linings in accordance with AWWA C-104.
   2) Coal tar epoxy coatings in accordance with ANSI A21.51
B. Steel fittings: Interior and exterior fusion epoxy coated.
C. Valves: Interior and exterior to be epoxy coated in accordance with AWWA C-550.

2.20 WATER SERVICES

A. Service Lines: PE or PVC as specified herein.
B. Fittings: All fittings to be manufactured of brass, cast and machined in accordance with AWWA C-800.
   1) Fittings to be as manufactured by Mueller Company, Hays Manufacturing Company, Ford Meter Box Company, James Jones Company or A.Y. McDonald Manufacturing Company, or approved equal.
C. Service Saddles:
   1) Service saddles for pipe less than three inches to be a single band which is hinged or split from saddle body and is anchored by bolting one or more bolts between band and saddle body.
   2) Service saddles for pipe greater than three inches to vary in bolt patterns and band numbers based on type of pipe to be tapped.
   3) Service saddles for 6 inch and 8 inch PVC C-900 pipe to be a double wide single flexible band, or two bands, sized exactly for 6 inch and 8 inch PVC C-900 pipe and is to be anchored by a minimum four bolt pattern on saddle body.

4) Service saddles for ANSI/AWWA C-150 ductile iron pipe to be at least a single band, two bolt pattern saddle anchoring, or hinged wide single strap with one bolt assembly.
5) All other service saddles for pipe greater than three inches to use a double-wide single flexible band, or two bands, with a minimum of a four bolt pattern anchoring.

D. Inserts: For PE pipe, stainless steel inserts to be used at connections with corporation stops, curb stops and meter valves.

3. EXECUTION

3.1 GENERAL:

A. Conform with requirements of referenced standard specifications and manufacturer's recommendations.
B. Comply with requirements of Section 31 23 16.13 for excavation, bedding, and backfill.
C. Place water mains and services a minimum of 30 inches below grade and 36 inches below pavement.
D. Place 10 gauge insulated copper wire 3" to 6" above centerline of all non-metallic pipe and mains. Wire to terminate at top of each valve box and be capable of extending 12" above top of box without valve operation interference. All splices to be made using watertight sealing method.
E. Fire mains, fire lines, and any dedicated lines connecting a fire suppression system with water main system to be constructed and tested by a Licensed Fire Sprinkler Contractor in accordance with Florida Statute 633.
F. Maintain a vertical clear separation of 18 inches between water main and sanitary sewer, sanitary force main or storm sewer crossings.
   1) Sanitary or storm to cross under water main whenever possible.
   2) Adjust water main to provide necessary clearance.
G. Where a vertical clear separation of 18 inches cannot be provided, construct both water main and sanitary sewer or sanitary force main of DIP with 20 foot laying length. For crossings of existing utility, construct new pipe of DIP.
   1) Maintain a minimum separation of 10 feet between any two joints.
   2) Joints to be equidistant from crossing.
   3) All water main joints within 20 feet of crossing to be mechanically restrained.
   4) A minimum vertical separation of 6 inches to be required.
H. Maintain a lateral separation of 10 feet between water main and sanitary or storm sewer.
   1) When 10 foot separation cannot be maintained, place water main in separate trench or on undisturbed earth shelf located on one side of sewer or force main at such an elevation that the aforementioned 18 inch vertical clear separation is provided.
   2) When 18 inch clear vertical separation and 10 foot horizontal separation cannot be maintained, construct water main and sewer of DIP with 20 foot laying length, place water main a minimum of 6 inches clear vertically above sewer and stagger joints to provide maximum distance between water and sewer joints.
I. Verify location and elevation of points of connection prior to commencing work.

3.2 HANDLING

A. General: Handle pipe and appurtenances with care to avoid damage.
   1) Lift by hoists or slide or roll on skidways in such a manner as to avoid shock.
   2) Do not drop.
   3) Do not allow pipe on skidways to roll against pipe already on ground.
   4) Damaged materials will not be installed.
B. Avoid damage to coating and lining.
   1) Repair damage prior to installation.
C. Pipe to be distributed on site of work parallel with and opposite or near place it is to be laid in trench and with bell ends facing directions in which installation will proceed unless otherwise directed.

3.3 INSTALLATION OF PIPE

A. Thoroughly clean pipe interior of foreign material before lowering into trench and keep clean during laying operations by means of plugs or other approved methods.
B. Properly position joint gaskets before pipe is lowered into trench.
C. Join pipe in accordance with manufacturer's requirements.

D. Install watertight plugs in open ends of pipe at all times when pipe laying is not in progress.
E. Do not allow trench water to enter pipe.
F. Perform cutting of pipe for inserting valves, fittings or closure pieces in a neat and workmanlike manner without damage to pipe.
   1) Bevel ends of cut pipe to prevent edge from damaging gasket upon insertion.
G. Whenever necessary to deflect pipe, either in vertical or horizontal plane, to avoid obstructions, maximum allowable deflection to be in accordance with manufacturer's recommendations.
H. Do not lay pipe in water or when trench conditions or weather is unsuitable.
I. Any pipe which is damaged or found to be defective after laying to be taken up and re-laid or replaced.
J. Backhoe buckets or excavation equipment are not to be applied directly to pipe.
K. If a joint is defective, it shall be cut out and entirely replaced or, if permission is given by Engineer, it may be repaired by a suitable clamp.

3.4 INSTALLATION OF FITTINGS

A. Fittings: Set and join to pipe in a manner specified previously for joint assembly. When conditions warrant, fittings should be provided with special support trussing and blocking.

3.5 INSTALLATION OF VALVES

A. General: Install in accordance with manufacturer's recommendations and referenced standard specifications.
B. Valves to be set and joined to new pipe in manner heretofore specified for cleaning, laying and joining pipe.
C. Valve Boxes: Cast iron valve boxes to be firmly supported and maintained centered and plumb over operating nut of valve with box cover flush with surface of finished pavement or at such other level as may directed.
   1) Boxes set in non-paved areas to have 24 inch square concrete pads centered and poured around top section of valve box.
   2) Valve covers to be painted safety blue as prescribed by American Public Works Association (APWA) uniform color code for utility systems and cast with word "Water" or letter W.
   3) Install valve and box to allow complete opening and closing by insertion of a valve key through valve box.
D. Blow-Offs: Blow-offs shall not be connected to any sewer or submerged in any stream or be installed in any other manner that will permit back-siphonage of contaminated water into distribution system.

3.6 INSTALLATION OF TAPS

A. General: Use material, equipment and procedures in accordance with AWWA Standards.
B. Sterilize material and equipment in accordance with AWWA Standards.
C. Pressure test sleeve and valve prior to performing tap to insure a watertight joint.

3.7 ANCHORAGE OF BENDS, TEES AND PLUGS

A. General: Prevent separation of joints at bends, tees and ends by providing adequate thrust restraint using thrust blocking or mechanical devices as selected by Contractor.
B. Concrete for Thrust Blocking: Comply with requirements of applicable Division-30 or Division-03 specifications.
C. Thrust Blocking: Place between undisturbed earth and fitting to be anchored with area of bearing on pipe and ground as shown on drawings.
   1) Place concrete so that pipe and fitting joints will be accessible for repair.
D. Precast thrust blocks may be used in lieu of poured-in-place blocks on eight inch and smaller water mains.
   1) Placement will be in accordance with standard procedures for restraining thrust.
   2) Earth behind blocks will be either undisturbed or compacted to a minimum of 95% AASHTO T-180.
E. Mechanical Devices: Install in accordance with manufacturer's recommendations.

3.8 TESTING AND INSPECTION REQUIREMENTS

A. General: Coordinate all testing and inspections and notify Engineer and agency inspectors 48 hours in advance. Tests to be observed by Engineer.

B. Fusion Joint Quality: Contractor to supervise and verify fusion procedures as well as field set-up and operation of fusion equipment by on-site fusion operator. At the option of the Engineer, Field verify fusion quality by making and testing a trial fusion. Allow trial fusion to completely cool, then cut out and bend test straps in accordance with ASTM D 2657. If trial fusion bent strap test fails at the joint, then field fusions represented by the trial fusion shall be rejected. Contractor, at his expense, to make all necessary corrections to equipment, set-up, operation and fusion procedure, and shall re-make the rejected fusions.

3.9 HYDROSTATIC TEST

A. Hydrostatic Test: Perform hydrostatic pressure test for a minimum of two hours on all domestic/combined services, mains and fittings at a minimum pressure of 150 psi in accordance with AWWA C-605 for PVC and PVCO, and AWWA C-600 for all other pipe. For dedicated fire mains and fittings, perform test for a minimum of two hours at a minimum pressure of 200 psi in accordance with NFPA 24-8-9.
   1) Perform test at any convenient time upon backfill and after piping has been cleaned and flushed.
   2) Prior to test, allow adequate curing time for reaction blocking.
   3) At request of Engineer, furnish certified test data for pressure gauges and recorders.
   4) When requested, provide chart recorders.
   5) Test in sections not exceeding one-half mile or as recommended by references.
   6) Expel all air prior to test by making any necessary taps and afterward install tapered brass plugs.

B. Pump test section to a pressure greater than minimum test pressure.
   1) Do not exceed minimum test pressure by more than 25 psi.
   2) If required, provide pressure relief valves pre-set to test pressure plus 25 psi.
   3) For PE pipe, gradually increase pressure to 10 psi above test pressure and maintain for 3 hours to allow for initial expansion, then reduce pressure to test pressure prior to commencement of leakage test. Make-up water during initial expansion phase is not considered in leakage test.

C. Maintain test pressure in excess of minimum by pumping water into test section.
   1) Do not allow pressure fluctuations greater than 5 psi.
   2) Failure to maintain pressure above minimum pressure will void test.

D. At end of two hour test period, adjust pressure to highest pressure obtained during duration of test period by pumping water into test section and then measure total amount of water used during test.

E. Test leakage is the volume of water required to maintain test pressure in excess of minimum pressure during duration of test period plus volume required at conclusion of test to bring line pressure back up to highest pressure obtained during duration of test period.

F. Allowable leakage test for services, water mains and fittings at 150 psi not to exceed that shown in following table. Allowable leakage for other pressures to be in accordance with test standards above.
   1) An additional leakage of 0.0078 gallons per hour per inch of diameter is allowed when testing against closed valves.

Two Hour Hydrostatic Test Allowable Leakage			
Nominal Pipe Dia. (In.)	Gallons/1000 Ft. of Pipe	Nominal Pipe Dia. (In.)	Gallons/1000 Ft. of Pipe
0.75	0.12	10	1.66
1	0.16	12	1.99
1.5	0.25	14	2.32
2	0.33	16	2.65
2.5	0.41	18	2.98
3	0.50	20	3.31
4	0.66	24	3.97
6	0.99	30	4.96
8	1.32	36	5.96

G. Allowable test leakage for fire mains and fitting to be in accordance with NFPA 24-8-9.

H. Leakage Correction:
   1) Mechanical joints: Tighten gland (do not exceed required torque).

2) Push-on joints: Cut out and entirely replace joint, or when allowed repair by a suitable clamp.
3) Remove and replace all cracked or defective pipes, fittings, valves or hydrants.
4) Repeat test upon correction.

I. Contractor is warned that pressure testing against existing "end-of-line" or blow-off valves is done at his own risk. Failure will not relieve Contractor of test requirements or result in additional compensation for extra work performed.

3.10 DISINFECTION

A. Disinfection: Thoroughly flush to remove all foreign material and sterilize in accordance with AWWA C-651.

B. Bacteriological Testing: After disinfecting and final flushing and before system is placed in service, perform testing by laboratory, state certified in accordance with Chapter 403, Florida Statutes.
1) Test two samples, taken one per day on consecutive days, for each half mile of main and for each branch.
2) If Engineer determines uncontrolled water has entered main, or excessive quantities of dirt or debris have entered main, obtain and test bacteriological samples at 200 feet intervals identified by location.
3) Obtain samples from water that has stood in main for at least 16 hours after final flushing.
4) Collect samples in sterile bottles treated with sodium thiosulfate as required by "Standard Methods for Examination of Water and Wastewater".
5) Do not use hose or fire hydrant in collection of samples. A corporation cock may be installed in main with a copper tube gooseneck assembly. After samples have been collected, gooseneck assembly may be removed.
6) Bacteriological testing must be performed concurrent to the as-built survey of the water system described in Section 30 00 00, item 3.9. If the as-built survey is delayed, bacteriological testing must be repeated at the time of the as-built survey for use in certification of the system. Bacteriological tests older than 60 days are not valid for use in system certification.

3.11 PLACEMENT INTO SERVICE

A. General: Except for single services, do not place system into service until a letter of clearance has been obtained from the Florida Department of Environmental Protection. Prior to this time, limit operation to disinfection, testing for leaks, and testing equipment operation.

B. Coordination: Coordinate construction, inspections, testing and as-built surveys for completion not less than 45 days prior to issuance of certificate of occupancy or placement into service.

4. MEASUREMENT AND PAYMENT

4.1 GENERAL

A. The contract unit price to be compensation in full for furnishing all materials, labor, equipment, tools and incidentals necessary for completion in every detail in accordance with plans and specifications.
1) There will be no separate payment for clean-up and restoration of property, or other items under this section unless specifically identified on the proposal, bid form, or contract.

END OF SECTION 33 11 10

SECTION 33 31 00
SEWER COLLECTION SYSTEM

1. GENERAL

1.1 DESCRIPTION OF WORK
A. Extent of work is indicated on drawings and includes but is not limited to:
   1) Sanitary sewer mains.
   2) Sewer laterals (services).
   1) Manholes, frames and covers.

1.2 RELATED WORK
A. Section 30 00 00 - General Site Work Requirements
B. Section 31 23 16.13 - Earthwork for Utilities
C. Section 32 05 23 - Concrete for Site Work

1.3 SUBMITTALS - comply with requirements of Section 30 00 00.

1.4 QUALITY ASSURANCE - comply with requirements of Section 30 00 00.

2. PRODUCTS

2.1 GENERAL
A. Use materials in accordance with material standard and applicable laws, ordinances and codes.
B. Materials to be new, unused and correctly designed and of standard first grade quality intended for use.
C. Do not use materials or equipment which are inferior, of a lower grade than indicated, specified, or required.

2.2 GRAVITY SEWER
A. General: Type shall be as shown on drawings.
B. Marking: Pipe and tubing to be marked as prescribed in referenced ASTM specifications.
C. Furnish ells, tees, reducing tees, wyes, couplings, crosses, transitions and end caps of same type and class of material as conduit, or of material having equal or superior physical and chemical properties as acceptable to Engineer.

2.3 POLYVINYL CHLORIDE PIPE (PVC)
A. Pipe: SDR 35 in accordance with ASTM D-3034 and D-1784. Pipe color shall be green.
B. Joints: Bell and spigot type conforming to ASTM D-3212 using factory installed, flexible elastomeric seals.
C. Elastomeric seals shall conform to ASTM F-477.
D. Coatings: Not required.
E. Cutting: PVC sewer pipe may be field cut using hand or power saws in accordance with manufacturer's recommendations. Raw spigot end thus formed shall be filed to remove gasket-damaging burrs and to form a standard bevel.
F. Fittings: PVC sewer pipe fittings shall comply with ASTM D-3034, ASTM D-3212 and have elastomeric seals conforming to ASTM F-477.

2.4 DUCTILE IRON PIPE
A. Pipe: Class 52 with a minimum tensile strength of 60,000 psi, a minimum yield strength of 42,000 psi, and a minimum elongation of 10% and in accordance with AWWA C-150/ANSI A 21.50.
B. Joints: Slip-on type with a single rubber gasket or mechanical joints in accordance with AWWA C-110/ANSI A 21.10.
C. Coatings: Interior and exterior bituminous coating in accordance with ANSI A-21.6, A-21.8 or A-21.51.

2.5 MANHOLES
A. General: Precast reinforced concrete sections in accordance with ANSI/ASTM C-478.
   1) Each manhole shall have a base section or tee section, barrel section and top, all as required.
B. Manhole Barrels: Constructed with preformed openings to meet indicated pipe alignment conditions and invert elevations.

1) Preformed opening not greater than 4 inches larger than outside diameter of pipe or pipe bell to be connected.
2) Distance between nearest edge of preformed openings and shoulder of barrel joint shall be 6 inches minimum.

C. Manhole Joints: Constructed with integral joints to prevent ground water infiltration.
1) Joints shall be tongue and groove with “ram-neck” or o-ring compression rubber gaskets in accordance with Federal Specification SS-S-210-A.

D. Manhole Connector: Use flexible pipe to manhole connector in connection of sewer pipe to pre-cast manhole.
1) Flexible connector shall be a Kor-N-Seal connector or equal and shall comply with ASTM C-443 and ASTM C-923 and consist of material designed to be resistant to ozone, weather elements, chemicals, including acids, alkalis, animal and vegetable fats, oils and petroleum products.

E. Invert Channel: Invert channels shall be constructed smooth and semicircular, conforming to inside of adjacent sewer section.
1) Mortared invert shall be made with a smooth curve using as large a radius as possible.
2) Changes in size and grade shall be made gradually and smoothly.
3) Benches shall be built up solidly with concrete or brick and mortar and shall be built whenever inside drop exceeds 24 inches.
4) All pipe entering manhole must be trimmed flush with walls.
5) All exposed sharp edges of pipe shall be wiped smooth with mortar.

F. Concrete Base: Precast or cast-in-place at Contractor’s option.
1) Use concrete which will attain a 28-day compressive strength of not less than 3000 psi.
2) Use reinforcing steel with a yield strength of not less than 60,000 psi in accordance with ASTM A-615.

G. Tops: Use flat concrete slab for manholes less than 6 feet in depth and an eccentric cone for all others.

H. Coatings: 2 coats of coal tar epoxy with a minimum total thickness of 16 mils interior and/or exterior as required by utility.

2.6 MASONRY MATERIALS

A. Brick: ANSI/ASTM C-32, Grade MS.

B. Masonry Mortar: ANSI/ASTM C-270, Type M.

C. For minor amounts of mortar, packaged materials complying with ANSI/ASTM C-387, Type M, will be acceptable.

2.7 METAL ACCESSORIES

A. Manhole Frames and Covers: Gray cast iron, ANSI/ASTM A-48, Class 30 B.
1) Furnish covers with cast-in legend “Sanitary” or in accordance with utility.

B. Manhole Steps: Gray cast iron, ANSI/ASTM A-48, Class 30 B, integrally cast into manhole sidewalls, unless otherwise indicated.

3. EXECUTION

3.1 GENERAL:

A. Conform with requirements of referenced standard specifications and manufacturer’s recommendations.

B. Comply with requirements of Section 31 23 16.13 for excavation, bedding, and backfill.

C. Place lines a minimum of 30 inches below grade and 36 inches below pavement.

D. Place 10 gauge insulated copper wire 3” to 6” above centerline of all non-metallic pipe. Wire to terminate at top of cleanouts.

E. Comply with requirements of Section 33 11 10 for separation with water mains.
1) Maintain a horizontal separation of 10 feet between water main and sanitary sewer.
2) When bottom of water main is 18 inches above top of sanitary sewer and located in a separate trench, a lesser horizontal separation may be used when specifically dimensioned on plans or if prior approval is obtained from Engineer.

F. Verify location and elevation of points of connection prior to commencing work. Perform work to avoid interruptions to service where possible. Required service interruptions shall be performed during off-peak hours.

3.2 CLOSING ABANDONED UTILITIES

A. Close open ends of abandoned underground utilities indicated to remain in place.

B. Provide sufficiently strong closures to withstand hydrostatic or earth pressure which may result after closure.
1) Close with plastic plugs, or other acceptable methods suitable for size and type material being closed.
2) Wood plugs are not acceptable.

3) Close concrete or masonry utilities with not less than eight inch thick brick masonry bulkheads.

3.3 HANDLING

A. General: Handle pipe and appurtenances with care to avoid damage.
   1) Lift by hoists or slide or roll on skidways in such a manner as to avoid shock.
   2) Do not drop.
   3) Do not allow pipe on skidways to roll against pipe already on ground.
   4) Damaged materials will not be installed.
B. Avoid damage to coating and lining.
   1) Repair damage prior to installation.
C. Pipe shall be distributed on site of work parallel with and opposite or near place it is to be laid in trench and with bell ends facing directions in which installation will proceed unless otherwise directed.

3.4 INSTALLATION OF PIPE

A. General: Comply with requirements of Section 31 23 16.13 for excavation, bedding and backfill.
B. Ductile Iron Pipe: Install in accordance with manufacturer's recommendations and DIP research association publication "A Guide for Installation of Ductile Iron Pipe".
C. Polyvinyl Chloride Pipe: Install in accordance with ASTM D-2321 and Uni-Bell standard UNI-B-5.
   1) Deflection shall be limited to 7.5% in accordance with ASTM D-3034.
D. All sewer lines shall be laid to lines, grades and elevations contained within plans such that as-built slopes shall not deviate more than 10 percent from slopes shown on construction documents nor more than 0.10 feet from inverts shown on construction plans, whichever is less.
   1) For runs less than 250 feet, increase slopes and adjust inverts as required to insure that as-built slopes shall not deviate more than 10 percent from minimum slope shown on plans.
   2) Deviations which result in slopes less than 10 percent of minimum slope requirement shall be removed and replaced at no cost to Owner and shall include cost of any and all work by others which may be disturbed by such removal and replacement
E. Clean interior of all foreign material before being lowering into trench and keep clean by means of plugs or other approved methods.
F. Do not lay pipe in water or when trench conditions or weather is unsuitable for such work.
G. Pipe laying shall proceed up grade with spigot ends pointing in direction of flow.
   1) Lubricate spigot ends of pipe with a lubricant specified by pipe manufacturer prior to joining.
   2) Apply sufficient pressure to pipe to properly seat socket in bell of pipe.
   3) Joint Adapters: Make joints between ductile iron pipe and other types of pipe with standard manufactured ductile iron adapters and fittings.
H. Whenever pipe laying is stopped for night or for any other cause, end of pipe shall be securely closed with a stopper to prevent entrance of water, mud or other obstructing matter, and shall be secured to prevent being dislodged by sliding or other movement of backfilling.
I. Minimize interruptions to existing utilities.
J. Any pipe which is damaged or found to be defective after laying shall be taken up and re-laid or replaced.
K. After each pipe is laid it shall be partly backfilled and made secure before next joint is laid.
L. Interior Inspection: Inspect pipe to determine whether line displacement or other damage has occurred.
M. Make inspections after lines between manholes, or manhole locations, have been installed and approximately two feet of backfill is in place and at completion of project.
N. If inspection indicates poor alignment, debris, displaced pipe, infiltration or other defects, correct such defects to satisfaction of Engineer.

3.5 LATERALS AND SERVICES

A. Install laterals from sewer main to ROW line, 2 feet beyond back of curb, or within 5 feet of building as shown on construction plans and mark end.
   1) Ends of laterals shall terminate at such depth as required to serve adjacent property except that maximum depth below ground surface at end of lateral shall be four feet.
   2) In sewers over eight feet in depth, or where directed, stacks shall be carried up from tee connections at an angle of 45 degrees with vertical, and end shall terminate at depth specified for laterals.
   3) Ends of stacks or laterals shall be closed with covers as specified for tee branches.
   4) Mark lateral end point as shown on drawings.
   5) Permanently scribe lateral crossing of concrete curbs, gutters or valley gutters where present.
   6) Materials for stacks and laterals shall be as shown on drawings or designated in proposal.

B. Wherever house laterals are intercepted by excavation for new sewer, connection shall be maintained temporarily to old sewer until particular section of new sewer is completed and tested. Then house lateral shall be broken and reconnected to new sewer through a tee which shall have been placed in sewer for that purpose.

3.6 UNDERGROUND STRUCTURES

A. Precast Concrete Manholes: Place as shown on drawings.
   1) In paved areas, set tops of frames and covers flush with finish surface.
   2) In unpaved areas, set tops three inches above finish surface, unless otherwise indicated.
B. Use epoxy-bonding compound where manhole steps are mortared into manhole walls.
C. Provide drop manholes as shown on plans.

3.7 JOINING PIPE TO MANHOLES OR OTHER STRUCTURES

A. Connect pipe to manhole or other structure using flexible connector such as Kor-n-seal connector or approved equal in accordance with ASTM C-443 and ASTM C-923.
B. Stubouts for future mains shall be constructed at locations and to elevations shown on plans.
   1) Stubouts shall be plugged with bricks and mortar per detail shown on plans.

3.8 TESTING AND INSPECTION REQUIREMENTS - comply with requirements of Section 30 00 00. Tests to be observed by Engineer.

4. OPERATION AND MAINTENANCE

4.1 GENERAL:

A. Maintain systems during construction to prevent depositions of sediments and debris into manholes and lines.
B. Inspect and remove any sediments and debris prior to placement into service.

4.2 PLACEMENT INTO SERVICE

A. General: Except for single services, do not place system into service until a letter of clearance has been obtained from the Florida Department of Environmental Protection. Prior to this time, limit operation to testing.
B. Coordination: Coordinate construction, inspections, testing and as-built surveys for completion not less than 45 days prior to issuance of certificate of occupancy or placement into service.

4.3 POST-CONSTRUCTION RECOMMENDED OPERATION AND MAINTENANCE PROCEDURES

A. General
   1) Operation and maintenance procedures shall be in accordance with “Operation and Maintenance of Wastewater Collection Systems”, California State University, Department of Civil Engineering, 1980.
   2) Operation and maintenance procedures shall be in accordance with “Wastewater Collection Systems Management Manual of Practice No. 7, Water Environment Federation.
   3) Systems shall be operated and maintained so as to provide uninterrupted service.
   4) Inspections to be performed by licensed service professional for private systems or appropriate maintenance entity for public systems.
B. Gravity Collection System
   1) Facility procedures should be implemented to prevent unauthorized disposal or connection from sources such as stormwater, chemicals, industrial wastes, flammables, or other products.
   2) Manholes should be inspected on a biannual basis for debris and blockages. Deficiencies should be corrected.
   3) Manholes should be inspected on an annual basis following a significant rainfall event for evidence of stormwater infiltration. Deficiencies should be corrected.
   4) The complete system should be inspected once every three years. Deficiencies should be corrected.

5. MEASUREMENT AND PAYMENT

5.1 GENERAL

A. The contract unit price shall be compensation in full for furnishing all materials, labor, equipment, tools and incidentals necessary for completion in every detail in accordance with plans and specifications.
   1) There will be no separate payment for clean up and restoration of property, or other items under this section unless specifically identified on the proposal, bid form, or contract.
B. Sewer Pipe:

1) When payment is on a lineal basis, contract unit price for various sizes, types and depths of pipe shall be compensation in full for one linear foot of pipe complete and in place.
2) When payment is on a lineal basis with depth of cut classifications, contract unit price shall be compensation in full for one linear foot of pipe within depth of cut classification complete and in place.
3) Length of pipe will be measured horizontally from center of structures and ends of pipes, except, mitered end sections will not be included in the length of concrete pipe. When depth of cut classifications are included in contract unit price, classification will be vertical distance from natural ground surface or subgrade of roadway, whichever is least, to pipe invert.
   (a) Depth of cut will be vertical distance from ground surface or subgrade, whichever is least, to pipe invert.

C. Manholes: When payment is on a per unit basis with depth of cut classifications, contract unit price shall be compensation in full for one structure of various size, type and depth complete with frames and covers, steps, inverts, connections and stub-outs in place.
   1) Depth of structure shall be vertical distance from top of structure to invert.

END OF SECTION 33 31 00

THIS PAGE LEFT INTENTIONALLY BLANK

SECTION 33 40 00
STORM SEWER COLLECTION SYSTEM

1. GENERAL

1.1 DESCRIPTION OF WORK

A. Extent of work is indicated on drawings and includes but is not limited to:
   1) Storm sewer piping.
   2) Manholes, frames and covers.
   3) Grate inlets, frames and gratings.
   4) Outfall structures.
   5) Junction boxes.
   6) Endwalls.
   7) Mitered end sections.
   8) Riprap.
   9) Skimmers.

1.2 RELATED WORK

A. Section 30 00 00 - General Site Work Requirements
B. Section 31 20 00 - Earthwork
C. Section 31 23 16.13 - Earthwork for Utilities
D. Section 32 05 23 - Concrete for Site work or Division-03 Section for Concrete

1.3 SUBMITTALS - comply with requirements of Section 30 00 00.

1.4 QUALITY ASSURANCE - comply with requirements of Section 30 00 00.

2. PRODUCTS

2.1 CONDUIT MATERIALS

A. Reinforced Concrete Pipe (RCP): ANSI/ASTM C76, Class Ill, Wall 'B', with bell and spigot joints using o-ring rubber gaskets and complying with ANSI/ASTM C 443,
B. Fiber Reinforced Concrete Pipe (FRCP): FDOT 449, Class Ill, with bell and spigot joints using o-ring rubber gaskets and complying with the hydrostatic requirements of ANSI/ASTM C 443,
C. Corrugated Polyethylene/Polypropylene Pipe (CPE or CPP):
   1) Smaller than 12": Double wall high density polyethylene pipe with corrugated exterior and smooth interior such as ADS N-12 WT IB or equal in accordance with AASHTO M252 Type S or ASTM F2648. Joints to be watertight in accordance with ASTM D3212. Fittings to be in accordance with ASTM F2306.
   2) 12" and greater: Double wall polypropylene pipe with corrugated exterior and smooth interior such as ADS N-12 HP or equal in accordance with ASTM F2736. Joints to be bell and spigot in accordance with ASTM F2736 and watertight in accordance with ASTM D3212. Fittings to be in accordance with ASTM F2736.
D. Polyvinyl Chloride Pipe (PVC): In accordance with ASTM D3034 and D1784 and meeting dimension requirements of standard dimension ratio (SDR) 35. Joints to be bell and spigot type conforming to ASTM D3212 using factory installed flexible elastomeric seals. Elastomeric seals to conform to ASTM F477. Color to be white.

2.2 CONCRETE STRUCTURES

A. Concrete Base: Precast or cast-in-place, at Contractor's option. Use concrete which will attain a 28-day compressive strength of not less than 3000 psi. Use reinforcing steel with a yield strength of 60,000 psi in accordance with ASTM A615.
B. Precast Concrete Structures: ANSI/ASTM C478, size and modifications as indicated with modified

tongue-and-groove compression gasket joints or bell and spigot joints using o-ring rubber gaskets and complying with ANSI/ASTM C443.

C. Cast-In-Place Concrete Structures: Use concrete with a minimum 28-day compressive strength of not less than 3000 psi. Use reinforcing steel with a yield strength of 60,000 psi in accordance with ASTM A615. Joints when necessary to be modified tongue-and-groove compression gasket joints complying with ANSI/ASTM C443.

2.3 MASONRY MATERIALS

A. Concrete Masonry Units: ANSI/ASTM C139.
B. Manhole Brick: ANSI/ASTM C32, Grade MS.
C. Sewer Brick: ANSI/ASTM C32, Grade SS.
D. Masonry Mortar: ANSI/ASTM C270, Type M.
E. For minor amounts of mortar, packaged materials complying with ANSI/ASTM C387, Type M, will be acceptable.

2.4 METAL ACCESSORIES

A. Manhole Frames and Covers: Gray cast iron in accordance with ANSI/ASTM A48, Class 30 B. Manhole frames and covers to be traffic rated.
B. Manhole Steps: Gray cast iron, ANSI/ASTM A48, Class 30 B, integrally cast into manhole sidewalls, unless otherwise indicated.
C. Inlet Grates and Frames: Gray cast iron in accordance with ANSI/ASTM A48, Class 30 B unless noted otherwise. Steel grates and frames to be galvanized steel in accordance with ASTM A123.
   1) Grates and frames to be traffic rated, except grates in retention and detention areas may be non-traffic rated.

2.5 RIP-RAP

A. General: Riprap material to be crushed quarry stone, crushed concrete, or as specified on drawings.
B. Gradation: Graded mixture with individual pieces weighing, in general from 20 to 300 pounds with not more than 25% weighing less than 50 pounds, and at least 50% weighing 100 pounds or more, or as shown on the drawings.
C. Stone to be sound and durable quarry stone material with a minimum specific gravity of 1.90.
D. Material to be free of cracks, soft seams, debris, rebar, structural defects and to be roughly angular and reasonably free from thin, flat or elongated pieces.
E. Geotextile: Fabric to be Mirafi 500-X or approved equal.

3. EXECUTION

3.1 EXCAVATION, BEDDING AND BACKFILL - comply with requirements of Section 31 23 16.13.

3.2 INSTALLATION OF CONDUIT

A. General: Install conduit in accordance with governing authorities having jurisdiction, except where more stringent requirements are indicated.
   1) Inspect for defects before installation. Mark defective materials and promptly remove from site.
   2) Lay beginning at low point of system, true to grade and alignment indicated with unbroken continuity of invert.
   3) Place bell ends or groove end of pipe facing upstream.
   4) Install gaskets in accordance with manufacturer's recommendations.
B. Concrete Pipe: Install in accordance with applicable provisions of American Concrete Pipe Association "Concrete Pipe Field Manual", unless otherwise indicated.
   1) Place circular concrete pipe with elliptical reinforcing so that reference lines indicating top of pipe are not more than 5 degrees from vertical plane through longitudinal axis of pipe.
C. CPE Pipe: Install in accordance with manufacturer's recommendations.
D. PVC Pipe: Install in accordance with manufacturer's recommendations.
E. Cover requirements: Clear cover between top of pipe and bottom of base, pavement, or grade to not be less than requirements contained in FDOT Index 205.

F. Cleaning Conduit: Clear interior of conduit of dirt and other superfluous material as work progresses.
   1) Maintain swab or drag line and pull past each joint upon completion.
   2) Use brushes and brooms in large, accessible conduits.
   3) Place plugs in ends of uncompleted conduit at end of day or whenever work stops.
   4) Flush lines between manholes when required to remove collected debris.

G. Closing Abandoned Utilities: Close open ends of abandoned underground utilities which are indicated to remain in place.
   1) Provide sufficiently strong closures to withstand hydrostatic or earth pressure.
   2) Close open ends of concrete or masonry utilities with not less than eight inches brick masonry bulkheads.

H. Interior Inspection: Continually inspect conduits to determine whether line displacement or other damage has occurred during installation or backfill operations.
   1) Make inspections after lines between manholes, or manhole locations, have been installed and approximately two feet of backfill is in place and at completion of project. If inspection indicates poor alignment, debris, displaced pipe, infiltration or other defects, correct such defects to satisfaction of Engineer.

3.3 UNDERGROUND STRUCTURES

A. General: Structures to be pre-cast concrete unless specifically allowed and authorized in writing by Engineer.
   1) Where structures occur in pavements, set tops of frames and covers flush with finish surface. Elsewhere, set tops three inches above finish surface, unless otherwise indicated.
   2) Use epoxy-bonding compound where steps are mortared into structure walls.

B. Masonry Structures: Place as shown on drawings.
   1) At Contractor's option, use either sewer brick or concrete masonry units.
   2) Mix mortar with minimum water for workability. Re-tamping of mortar will not be permitted. Keep mortar mixing and conveying equipment clean. Do not deposit mortar upon, or permit contact with, ground.
   3) Lay masonry in mortar to form full bed with ends and side joints in one operation, and with full bed and vertical joints, not more than 5/8 inch wide. Protect fresh masonry from freezing and from rapid drying.
   4) Apply a 1/2-inch thick mortar coating on both interior and exterior wall surfaces.

C. Cast-In-Place Concrete Structures: Place as shown on drawings.

D. Precast Concrete Structures: Place as shown on drawings.
   1) Provide rubber joint gasket complying with ASTM C443. Grout inside of joints.

E. Connections: Connect to existing conduits and structures to will conform as nearly as practicable to requirements specified for new work.
   1) Prevent concrete or debris from entering existing conduit or structure. Remove debris, concrete or other extraneous material which may accumulate.

3.4 RIP-RAP

A. General: Place and arrange on geotextile fabric to form a compact layer to the lines and grades shown on plans and to specified thickness; plus or minus three inches.
   1) Place such that small pieces are not segregated but evenly distributed.

3.5 DISPOSAL OF EXCESS AND WASTE MATERIALS - comply with requirements of Section 30 00 00.

3.6 **TESTING AND INSPECTION REQUIREMENTS -** comply with requirements of Section 30 00 00.

4. OPERATION AND MAINTENANCE

4.1 GENERAL:

A. Maintain systems during construction to prevent depositions of sediments and debris into structures and sewers.

B. Inspect and remove any sediments and debris prior to placement into service.

C. Implement procedures to prevent unauthorized disposal or connection from sources such as chemicals, industrial wastes, flammables, or other products.
D. Inspect structures on a biannual basis for debris and blockages. Correct deficiencies.
E. Inspect complete system once every three years. Correct deficiencies.

5. MEASUREMENT AND PAYMENT

5.1 GENERAL

A. The contract unit price to be compensation in full for furnishing all materials, labor, equipment, tools and incidentals necessary for completion in every detail in accordance with plans and specifications.
   1) There will be no separate payment for clean up and restoration of property, or other items under this section unless specifically identified on the proposal, bid form, or contract.
B. Pipe: When payment is on a lineal basis, contract unit price for various sizes, types and depths of pipe to be compensation in full for one linear foot of pipe, complete and in place.
   1) Length of pipe to be measured horizontally from center of structures and ends of pipes; except, mitered end sections will be excluded in the length of concrete pipe.
C. Manholes, Junction Boxes and Inlets: When payment is on a per unit basis with depth of cut classifications, contract unit price to be compensation in full for one structure of various size, type and depth complete with frames and covers or grates, steps, inverts, connections and stub-outs in place.
   1) Depth of structure to be vertical distance from top of structure to invert.
D. Mitered End Sections: When payment is on a per unit basis, contract unit price for various sizes and types, including concrete pipe section, reinforcing, connections, anchors, concrete, sand, sod and incidentals necessary to be compensation in full for one mitered end section complete and in place.

END OF SECTION 33 40 00