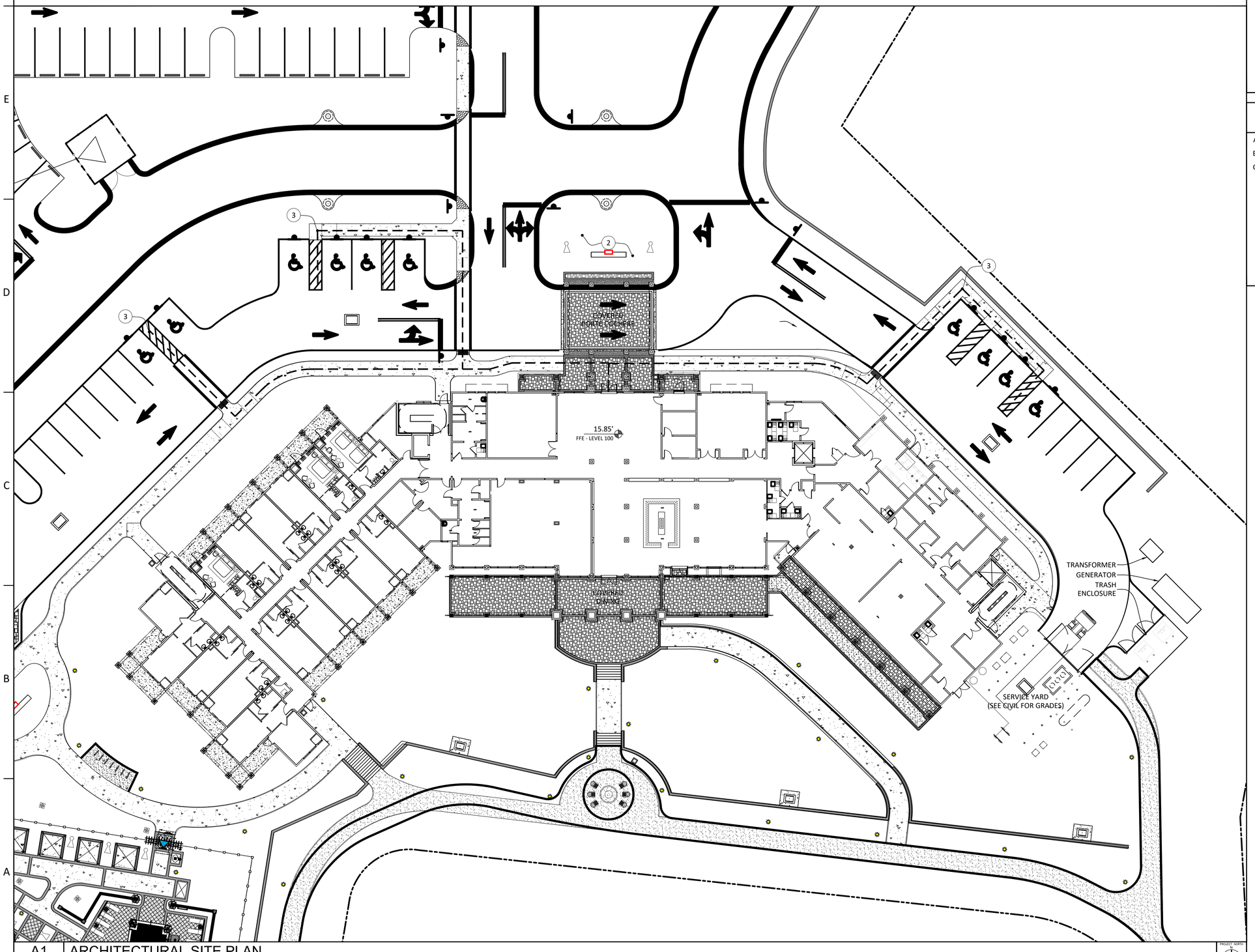

SHEET NOTES / LEGEND

1. THIS IS AN ARCHITECTURAL SITE PLAN. REFER TO CIVIL FOR FINAL LAYOUTS
2. MONUMENTAL SITE SIGN, SEE LANDSCAPE DRAWINGS
3. ACCESSIBLE ROUTE

GENERAL NOTES

A. LEVEL 100: FIN FL ELEV = 15.85'
B. BASE FLOOD ELEVATION (BFE) = 13.0'
C. DESIGN FLOOD ELEVATION (DFE)= 14.0'

A1	ARCHITECTURAL SITE PLAN
A000	1/16" = 1'-0"

PROJECT NORTH

KUO DIEDRICH CHI
730 PEACHTREE STREET, NE
STUDIO 325
ATLANTA, GEORGIA 30308
678.244.6270
www.KDCarchitects.com

ARCHITECT:

Mark A Diedrich

Digitally signed by Mark A Diedrich
Date: 2025.11.14 15:30:05 -05'00'

ARCH. REG: AR91344

CONSULTANT:

REVISIONS

DATE:	DESCRIPTION:
10/18/24	SCHEMATIC DESIGN
6/5/25	DESIGN DEVELOPMENT
10/23/25	50% CONSTRUCTION DOCS
11/14/25	PERMIT SET

PROJECT:

SERENITY SEASIDE RESORT

BUILDING #1

THE INN

186 SOUTH BAY SHORE DRIVE, EASTPOINT, FL 32328

Serenity Seaside Operations, LLC
174 Watercolor Way, PMB 410
Santa Rosa Beach, Florida 32459

JOB NUMBER: 23019.1

DATE: --/--/----

TITLE: ARCHITECTURAL SITE PLAN

SHEET: A000

K:\Projects\23\23019\DWGs\Serenity_Bldg-1_Inn\Sheets\23019.1-A000.dwg Plotted: Nov 13, 2025 - 6:06pm by ColebLawrence

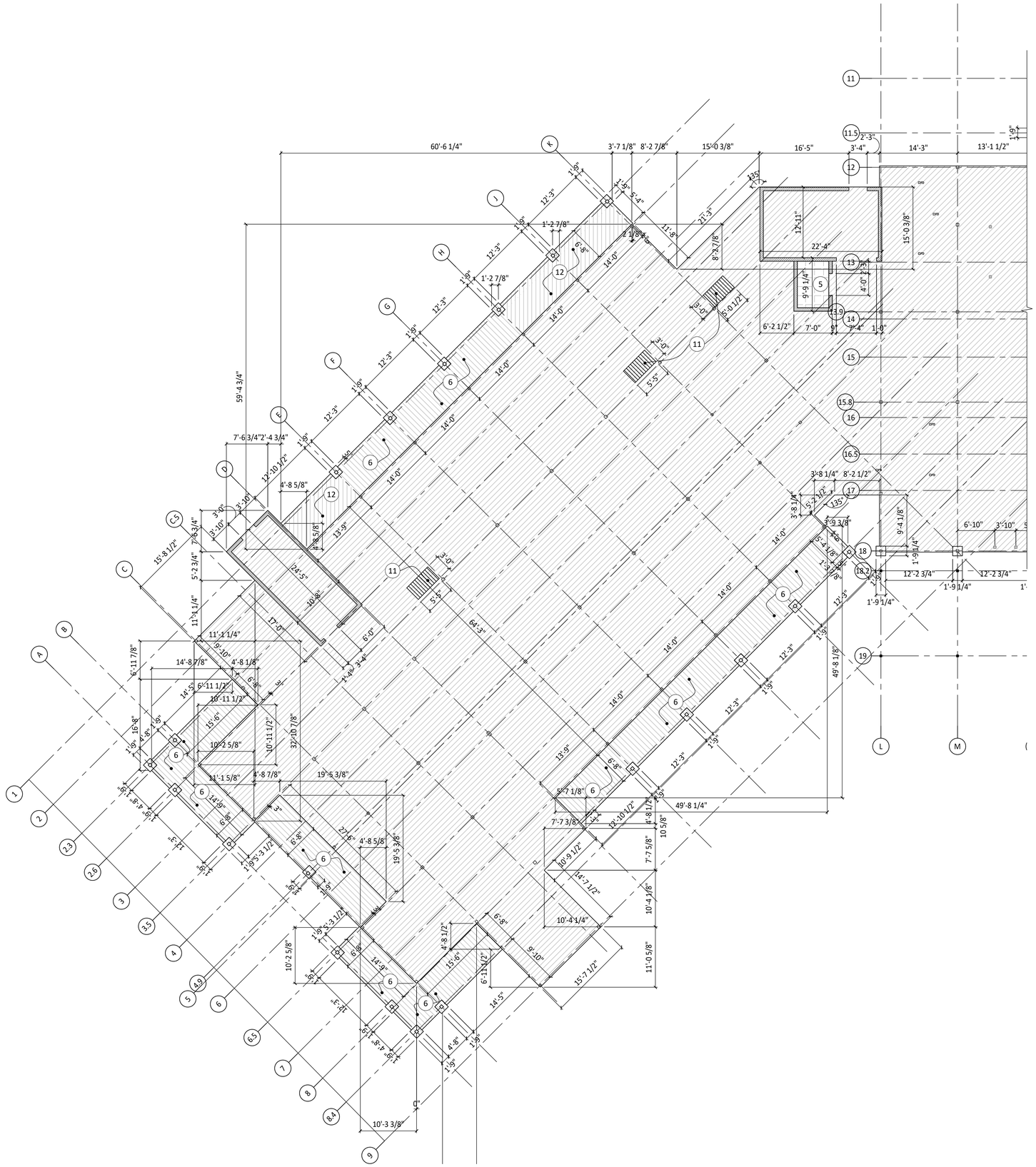

SHEET NOTES / LEGEND

1. CONC SLAB EDGE ALIGNS W/ GRIDLINE
2. COLUMN FACE ALIGNS W/ GRIDLINE
3. EDGE OF BEARING WALL STUD ALIGNED W/ EDGE OF SLAB
4. VERIFY SLAB DEPRESSION W/ PAVER SELECTION
5. TOP OF ELEVATOR PIT, 5'-0" BELOW FIN FL
6. CONC SLAB, 1/2" SLAB STEP BELOW MAIN SLAB & SLOPES 1/4" : 12" AWAY FROM BLDG, BROOM FINISH
7. CONC SLAB DEPRESSION: 4" FOR COOLER/FREEZERS
8. FLOOR BOX, SEE ELEC
9. TRENCH DRAIN, SEE PLUMB
10. CONC PAD FOR LAUNDRY EQUIP
11. RECESSED ADA SHOWER SLABS, 3"
12. CONC SLAB, 1/4" SLAB STEP BELOW MAIN SLAB FOR ADA UNITS & SLOPES 1/4" : 12" AWAY FROM BLDG, BROOM FINISH

LEGEND

101	DOOR / CASED OPENING	#	WINDOW TAG
A#	WALL PARTITION TAG	L#	LOUVER TAG
101	ROOM NUMBER TAG	SLOPE	DIRECTION OF SLOPEDFLOOR

AD	AREA DRAIN	EF	EXHAUST FAN
CU	CONDENSING UNIT	HB	HOSE BIBB
FE	FIRE EXTINGUISHER	POS	POINT OF SALE
FD	FLOOR DRAIN	WH	WATER HEATER

GENERAL NOTES

A. ALL FURNITURE IS BY OWNER

B. HOTEL ROOM TYPE MATRIX, C4/A114

C. INTERIOR PARTITION TYPES TO BE TYPE "A", U.N.O - SEE A1/A851

D. TOP OF PARTITION DETAILS, SEE A1/A861

E. FIRE EXTINGUISHER DETAILS, SEE A4/A871

F. REFER TO SHEETS G104 - G107 FOR ADA REQUIRED DIMENSIONS

G. TYP DOOR HINGE INSTALL DIMENSION @ PERPENDICULAR WALLS, E6/A871

H. DOOR SCHEDULES ON SHEETS A801 & A802

I. METAL STUD WALL FRAMING ADDITIONAL DETAILS ON SHEETS A871 & A872

J. UL PENETRATIONS & UL ASSEMBLIES: SEE SHEETS A881 - A885

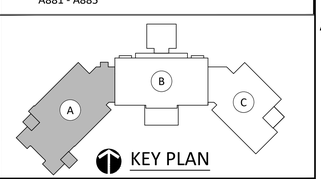

KEY PLAN

A2	SLAB EDGE PLAN: LEVEL 100 - PART "A"	
A001A	1/8" = 1'-0"	

KUO DIEDRICH CHI
730 PEACHTREE STREET, NE
STUDIO 325
ATLANTA, GEORGIA 30308
678.244.6270
www.KDCarchitects.com

ARCHITECT:

Mark A Diedrich

Digitally signed by Mark A Diedrich
Date: 2025.11.14 15:30:19 -05'00'

ARCH. REG: AR91344

CONSULTANT:

REVISIONS

DATE:	DESCRIPTION:
10/18/24	SCHEMATIC DESIGN
6/5/25	DESIGN DEVELOPMENT
10/23/25	50% CONSTRUCTION DOCS
11/14/25	PERMIT SET

PROJECT:

SERENITY SEASIDE RESORT

BUILDING #1

THE INN

186 SOUTH BAY SHORE DRIVE, EASTPOINT, FL 32328

Serenity Seaside Operations, LLC
174 Watercolor Way, PMB 410
Santa Rosa Beach, Florida 32459

JOB NUMBER: 23019.1

DATE: --/--/----

TITLE: SLAB EDGE PLAN: LEVEL 100 - PART "A"

SHEET: A001A

K:\Projects\23\23019\DWGs\Serenity_Bldg-1_Inn\Sheets\23019.1-A001A.dwg Plotted: Nov 13, 2025 -- 6:06pm by CalebLawrence

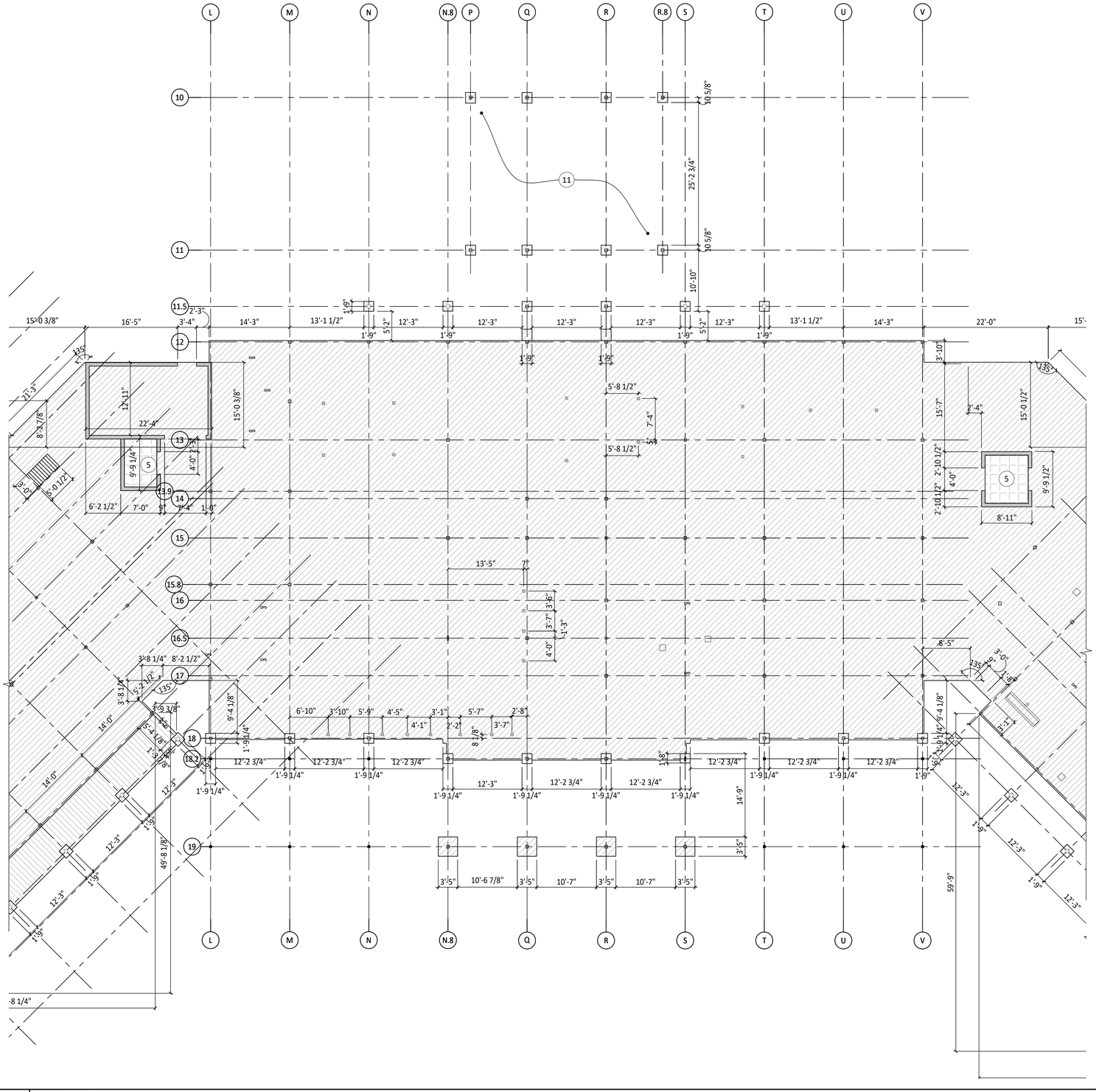

A2 | SLAB EDGE PLAN: LEVEL 100 - PART "B"

A001B | 1/8" = 1'-0"

PROJECT NORTH

SHEET NOTES / LEGEND

1. CONC SLAB EDGE ALIGNS W/ GRIDLINE
2. COLUMN FACE ALIGNS W/ GRIDLINE
3. EDGE OF BEARING WALL STUD ALIGNED W/ EDGE OF SLAB
4. ~~VERIFY SLAB DEPRESSION W/ PAVER SELECTION~~
5. TOP OF ELEVATOR PIT, 5'-0" BELOW FIN FL
6. CONC SLAB, SLOPES 1/4" : 12" AWAY FROM BLDG, BROOM FINISH
7. CONC SLAB DEPRESSION: 4" FOR COOLER/FREEZERS
8. FLOOR BOX, SEE ELEC
9. TRENCH DRAIN, SEE PLUMB
10. CONC PAD FOR LAUNDRY EQUIP
11. SEE LANDSCAPE DRAWINGS FOR CONCRETE RIBBON CURB AND HEADERS AT VEHICULAR PAVERS

LEGEND

101	DOOR / CASED OPENING	#	WINDOW TAG
A#	WALL PARTITION TAG	L#	LOUVER TAG
101	ROOM NUMBER TAG	SLOPE	DIRECTION OF SLOPEDFLOOR

AD	AREA DRAIN	EF	EXHAUST FAN
CU	CONDENSING UNIT	HB	HOSE BIBB
FE	FIRE EXTINGUISHER	POS	POINT OF SALE
FD	FLOOR DRAIN	WH	WATER HEATER

GENERAL NOTES

A. ALL FURNITURE IS BY OWNER

B. HOTEL ROOM TYPE MATRIX, C4/A114

C. INTERIOR PARTITION TYPES TO BE TYPE "A", U.N.O - SEE A1/A851

D. TOP OF PARTITION DETAILS, SEE A1/A861

E. FIRE EXTINGUISHER DETAILS, SEE A4/A871

F. REFER TO SHEETS G104 - G107 FOR ADA REQUIRED DIMENSIONS

G. TYP DOOR HINGE INSTALL DIMENSION @ PERPENDICULAR WALLS, E6/A871

H. DOOR SCHEDULES ON SHEETS A801 & A802

I. METAL STUD WALL FRAMING ADDITIONAL DETAILS ON SHEETS A871 & A872

J. UL PENETRATIONS & UL ASSEMBLIES: SEE SHEETS A881 - A885

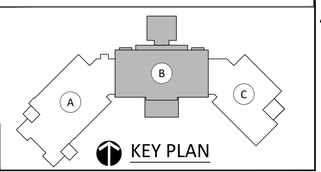

KEY PLAN

KUO DIEDRICH CHI
730 PEACHTREE STREET, NE
STUDIO 325
ATLANTA, GEORGIA 30308
678.244.6270
www.KDCarchitects.com

ARCHITECT:

Mark A Diedrich

Digitally signed by Mark A Diedrich
Date: 2025.11.14 15:30:42 -05'00'

ARCH. REG: AR91344

CONSULTANT:

REVISIONS

DATE:	DESCRIPTION:
10/18/24	SCHEMATIC DESIGN
6/5/25	DESIGN DEVELOPMENT
10/23/25	50% CONSTRUCTION DOCS
11/14/25	PERMIT SET

PROJECT:

SERENITY SEASIDE RESORT

BUILDING #1

THE INN

186 SOUTH BAY SHORE DRIVE, EASTPOINT, FL 32328

Serenity Seaside Operations, LLC
174 Watercolor Way, PMB 410
Santa Rosa Beach, Florida 32459

JOB NUMBER: 23019.1

DATE: --/--/----

TITLE: SLAB EDGE PLAN: LEVEL 100 - PART "B"

SHEET: A001B

K:\Projects\23\23019\DWGs\Serenity_Bldg-1_Inn\Sheets\23019.1-A001B.dwg Plotted: Nov 13, 2025 - 6:06pm by ColebLawrence

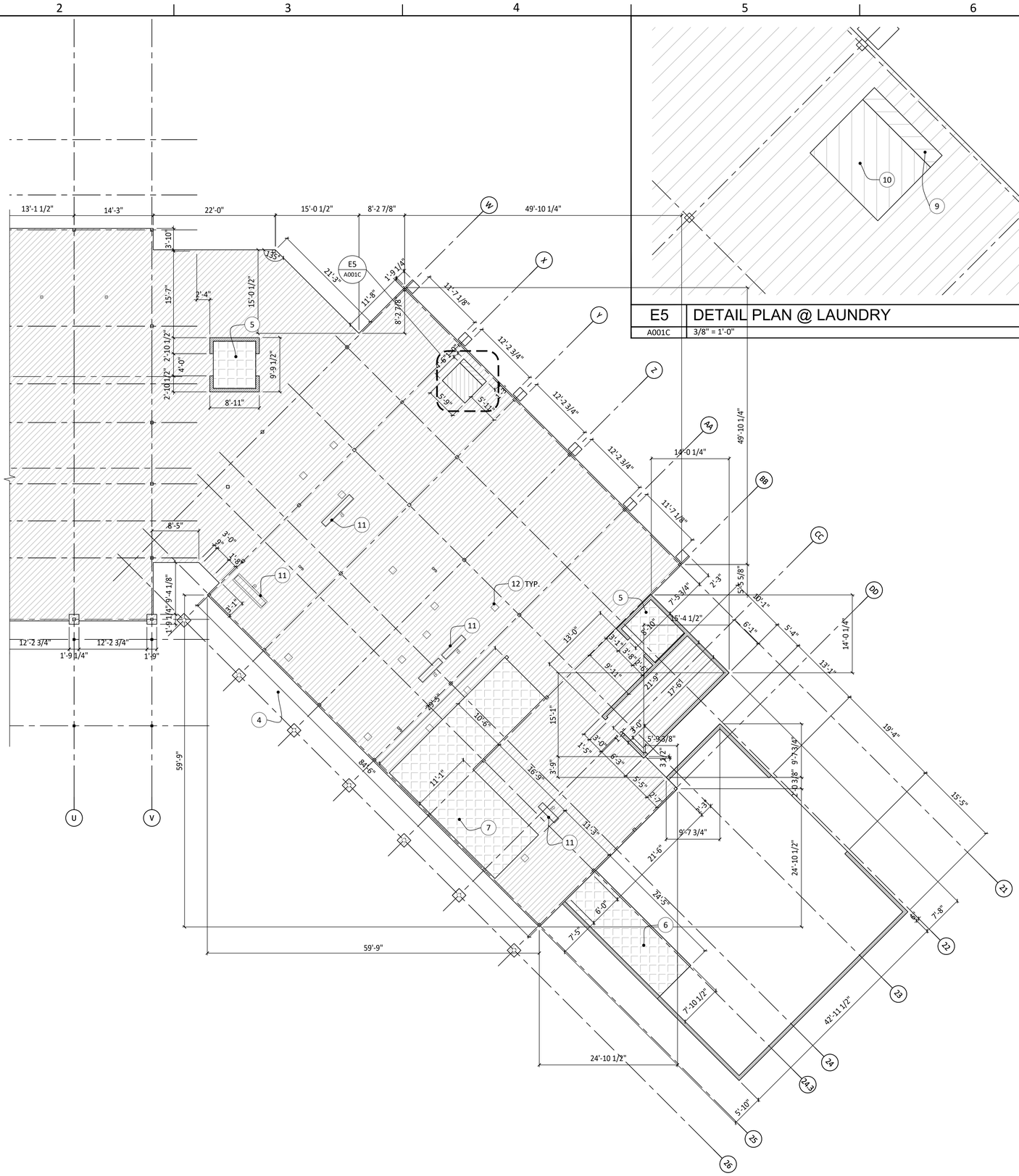

E5	DETAIL PLAN @ LAUNDRY
A001C	3/8" = 1'-0"

SHEET NOTES / LEGEND

1. CONC SLAB EDGE ALIGNS W/ GRIDLINE
2. COLUMN FACE ALIGNS W/ GRIDLINE
3. EDGE OF BEARING WALL STUD ALIGNED W/ EDGE OF SLAB
4. VERIFY SLAB DEPRESSION W/ PAVER SELECTION
5. TOP OF ELEVATOR PIT, 5'-0" BELOW FIN FL
6. CONC SLAB, SLOPES 1/4" : 12" AWAY FROM BLDG, BROOM FINISH
7. CONC SLAB DEPRESSION: 4" FOR COOLER/FREEZERS
8. FLOOR BOX, SEE ELEC
9. TRENCH DRAIN FOR LAUNDRY EQUIP, SEE PLUMB
10. CONC PAD FOR LAUNDRY EQUIP
11. TRENCH DRAIN FOR FOOD SERVICE EQUIP, SEE PLUMB
12. FLOOR SINK FOR FOOD SERVICE EQUIP, SEE PLUMB

LEGEND

101	DOOR / CASED OPENING	#	WINDOW TAG
A#	WALL PARTITION TAG	L#	LOUVER TAG
101	ROOM NUMBER TAG	SLOPE	DIRECTION OF SLOPEDFLOOR

AD	AREA DRAIN	EF	EXHAUST FAN
CU	CONDENSING UNIT	HB	HOSE BIBB
FE	FIRE EXTINGUISHER	POS	POINT OF SALE
FD	FLOOR DRAIN	WH	WATER HEATER

GENERAL NOTES

A. ALL FURNITURE IS BY OWNER

B. HOTEL ROOM TYPE MATRIX, C4/A114

C. INTERIOR PARTITION TYPES TO BE TYPE "A", U.N.O - SEE A1/A851

D. TOP OF PARTITION DETAILS, SEE A1/A861

E. FIRE EXTINGUISHER DETAILS, SEE A4/A871

F. REFER TO SHEETS G104 - G107 FOR ADA REQUIRED DIMENSIONS

G. TYP DOOR HINGE INSTALL DIMENSION @ PERPENDICULAR WALLS, E6/A871

H. DOOR SCHEDULES ON SHEETS A801 & A802

I. METAL STUD WALL FRAMING ADDITIONAL DETAILS ON SHEETS A871 & A872

J. UL PENETRATIONS & UL ASSEMBLIES: SEE SHEETS A881 - A885

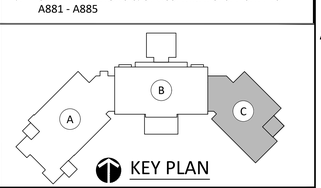

A2	SLAB EDGE PLAN: LEVEL 100 - PART "C"
A001C	1/8" = 1'-0"

KUO DIEDRICH CHI
730 PEACHTREE STREET, NE
STUDIO 325
ATLANTA, GEORGIA 30308
678.244.6270
www.KDCarchitects.com

ARCHITECT:

Mark A Diedrich

Digitally signed by Mark A Diedrich
Date: 2025.11.14 15:30:59 -05'00'

ARCH. REG: AR91344

CONSULTANT:

REVISIONS

DATE:	DESCRIPTION:
10/18/24	SCHEMATIC DESIGN
6/5/25	DESIGN DEVELOPMENT
10/23/25	50% CONSTRUCTION DOCS
11/14/25	PERMIT SET

PROJECT:

SERENITY SEASIDE RESORT

BUILDING #1

THE INN

186 SOUTH BAY SHORE DRIVE, EASTPOINT, FL 32328

Serenity Seaside Operations, LLC
174 Watercolor Way, PMB 410
Santa Rosa Beach, Florida 32459

JOB NUMBER: 23019.1

DATE: --/--/----

TITLE: SLAB EDGE PLAN: LEVEL 100 - PART "C"

SHEET: A001C

K:\Projects\23\23019\DWGs\Serenity_Bldg-1_Inn\Sheets\23019.1-A001C.dwg Plotted: Nov 13, 2025 - 6:06pm by CalebLawrence

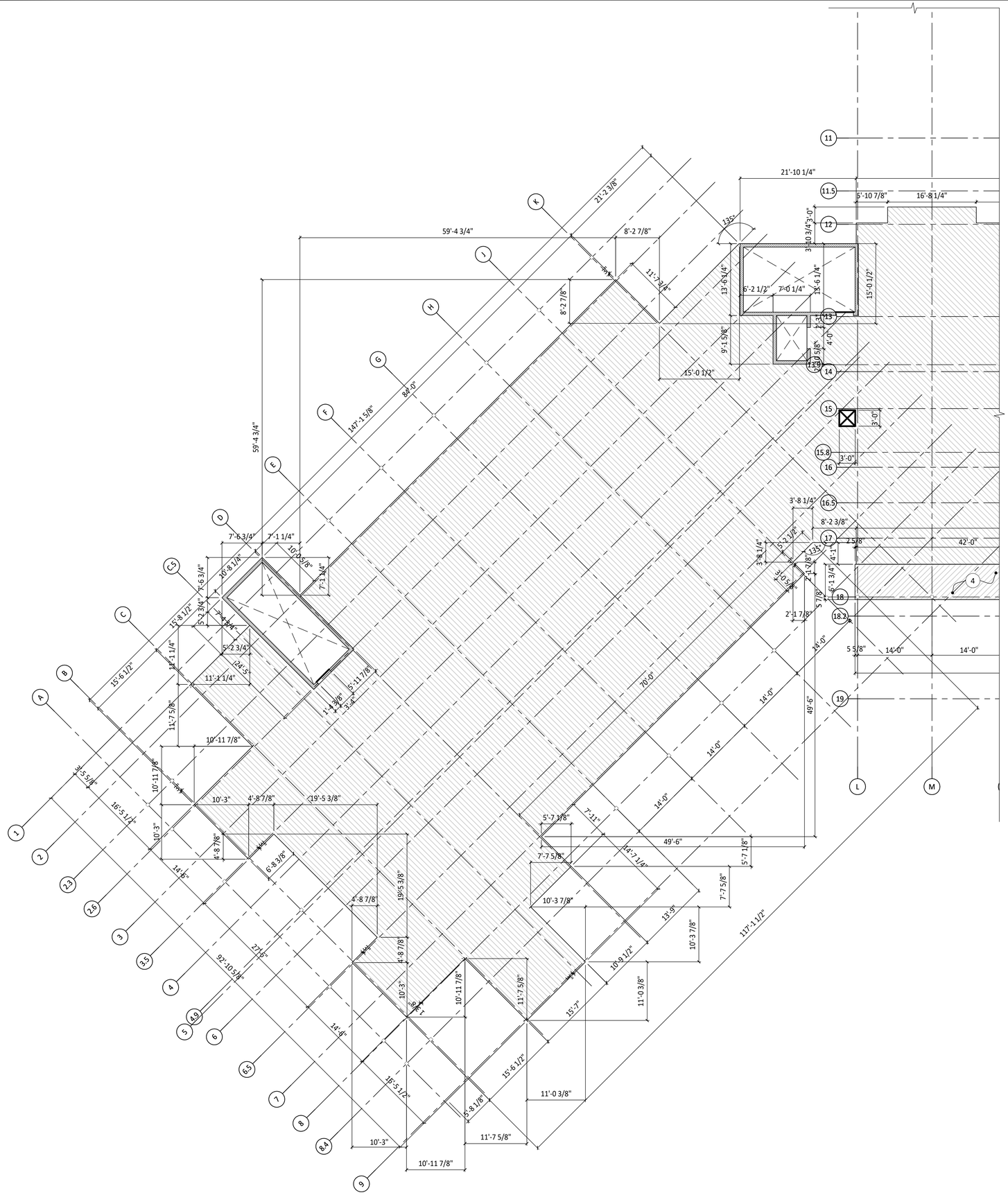

A2	SLAB EDGE PLAN: LEVEL 200 - PART "A"
A002A	1/8" = 1'-0"

PROJECT NORTH

SHEET NOTES / LEGEND

1. CONC SLAB EDGE ALIGNS W/ GRIDLINE
2. COLUMN FACE ALIGNS W/ GRIDLINE
3. EDGE OF BEARING WALL STUD ALIGNED W/ EDGE OF SLAB
4. CONC SLAB, 1/2" SLAB STEP BELOW MAIN SLAB & SLOPES 1/8" : 12" AWAY FROM BLDG, BROOM FINISH W/ PEDESTRIAN TRAFFIC COATING

LEGEND

101	DOOR / CASED OPENING	#	WINDOW TAG
A#	WALL PARTITION TAG	L#	LOUVER TAG
101	ROOM NUMBER TAG	SLOPE	DIRECTION OF SLOPEDFLOOR

AD	AREA DRAIN	EF	EXHAUST FAN
CU	CONDENSING UNIT	HB	HOSE BIBB
FE	FIRE EXTINGUISHER	POS	POINT OF SALE
FD	FLOOR DRAIN	WH	WATER HEATER

GENERAL NOTES

A. ALL FURNITURE IS BY OWNER

B. HOTEL ROOM TYPE MATRIX, C4/A114

C. INTERIOR PARTITION TYPES TO BE TYPE "A", U.N.O - SEE A1/A851

D. TOP OF PARTITION DETAILS, SEE A1/A861

E. FIRE EXTINGUISHER DETAILS, SEE A4/A871

F. REFER TO SHEETS G104 - G107 FOR ADA REQUIRED DIMENSIONS

G. TYP DOOR HINGE INSTALL DIMENSION @ PERPENDICULAR WALLS, E6/A871

H. DOOR SCHEDULES ON SHEETS A801 & A802

I. METAL STUD WALL FRAMING ADDITIONAL DETAILS ON SHEETS A871 & A872

J. UL PENETRATIONS & UL ASSEMBLIES: SEE SHEETS A881 - A885

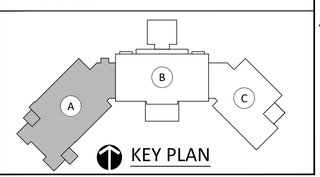

KEY PLAN

KUO DIEDRICH CHI
730 PEACHTREE STREET, NE
STUDIO 325
ATLANTA, GEORGIA 30308
678.244.6270
www.KDCarchitects.com

ARCHITECT:

Mark A Diedrich

Digitally signed by Mark A Diedrich
Date: 2025.11.14 15:31:12 -05'00'

ARCH. REG: AR91344

CONSULTANT:

REVISIONS	
DATE:	DESCRIPTION:
10/18/24	SCHEMATIC DESIGN
6/5/25	DESIGN DEVELOPMENT
10/23/25	50% CONSTRUCTION DOCS
11/14/25	PERMIT SET

PROJECT:

SERENITY SEASIDE RESORT

BUILDING #1

THE INN

186 SOUTH BAY SHORE DRIVE, EASTPOINT, FL 32328

Serenity Seaside Operations, LLC
174 Watercolor Way, PMB 410
Santa Rosa Beach, Florida 32459

JOB NUMBER: 23019.1

DATE: --/--/----

TITLE: SLAB EDGE PLAN: LEVEL 200 - PART "A"

SHEET: A002A

K:\Projects\23\23019\DWGs\Serenity_Bldg-1_Inn\Sheets\23019.1-A002A.dwg Plotted: Nov 13, 2025 - 6:07pm by ColeLawrence

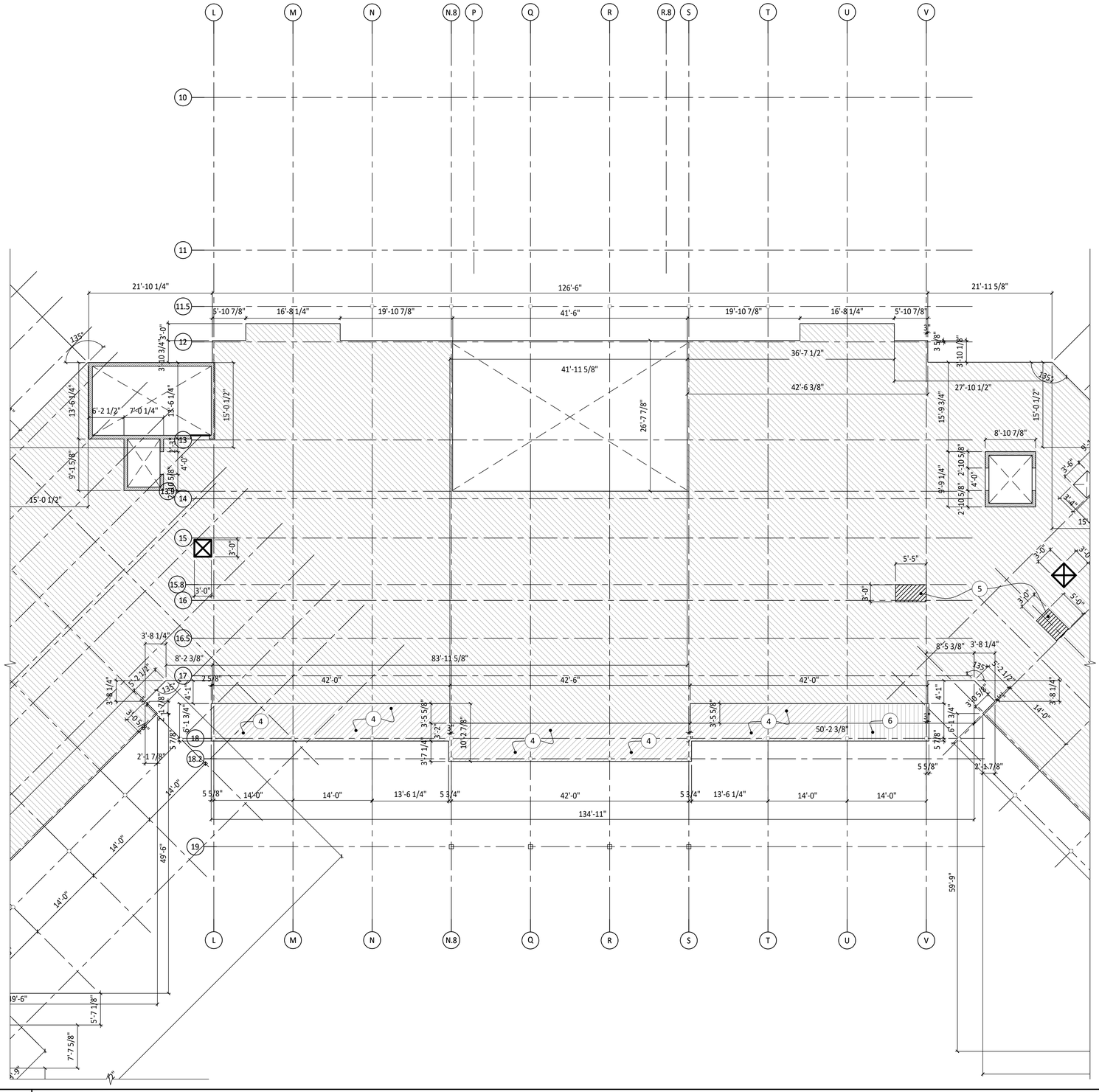

SHEET NOTES / LEGEND

1. CONC SLAB EDGE ALIGNS W/ GRIDLINE
2. COLUMN FACE ALIGNS W/ GRIDLINE
3. EDGE OF BEARING WALL STUD ALIGNED W/ EDGE OF SLAB
4. CONC SLAB, 1/2" SLAB STEP BELOW MAIN SLAB & SLOPES 1/8" : 12" AWAY FROM BLDG, BROOM FINISH W/ PEDESTRIAN TRAFFIC COATING
5. RECESSED SLABS AT ADA SHOWERS, 3"
6. CONC SLAB, 1/4" SLAB STEP BELOW MAIN SLAB FOR ADA UNITS & SLOPES 1/8" : 12" AWAY FROM BLDG, BROOM FINISH W/ PEDESTRIAN TRAFFIC COATING

LEGEND

101	DOOR / CASED OPENING	#	WINDOW TAG
A#	WALL PARTITION TAG	L#	LOUVER TAG
101	ROOM NUMBER TAG	SLOPE	DIRECTION OF SLOPEDFLOOR

AD	AREA DRAIN	EF	EXHAUST FAN
CU	CONDENSING UNIT	HB	HOSE BIBB
FE	FIRE EXTINGUISHER	POS	POINT OF SALE
FD	FLOOR DRAIN	WH	WATER HEATER

GENERAL NOTES

A. ALL FURNITURE IS BY OWNER

B. HOTEL ROOM TYPE MATRIX, C4/A114

C. INTERIOR PARTITION TYPES TO BE TYPE "A", U.N.O - SEE A1/A851

D. TOP OF PARTITION DETAILS, SEE A1/A861

E. FIRE EXTINGUISHER DETAILS, SEE A4/A871

F. REFER TO SHEETS G104 - G107 FOR ADA REQUIRED DIMENSIONS

G. TYP DOOR HINGE INSTALL DIMENSION @ PERPENDICULAR WALLS, E6/A871

H. DOOR SCHEDULES ON SHEETS A801 & A802

I. METAL STUD WALL FRAMING ADDITIONAL DETAILS ON SHEETS A871 & A872

J. UL PENETRATIONS & UL ASSEMBLIES: SEE SHEETS A881 - A885

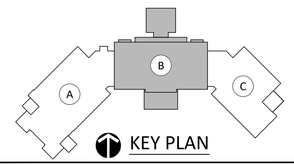

KEY PLAN

KUO DIEDRICH CHI
730 PEACHTREE STREET, NE
STUDIO 325
ATLANTA, GEORGIA 30308
678.244.6270
www.KDCarchitects.com

ARCHITECT:

Mark A Diedrich

Digitally signed by Mark A Diedrich
Date: 2025.11.14 15:31:24 -05'00'

ARCH. REG: AR91344

CONSULTANT:

REVISIONS

DATE:	DESCRIPTION:
10/18/24	SCHEMATIC DESIGN
6/5/25	DESIGN DEVELOPMENT
10/23/25	50% CONSTRUCTION DOCS
11/14/25	PERMIT SET

PROJECT:

SERENITY SEASIDE RESORT

BUILDING #1

THE INN

186 SOUTH BAY SHORE DRIVE, EASTPOINT, FL 32328

Serenity Seaside Operations, LLC
174 Watercolor Way, PMB 410
Santa Rosa Beach, Florida 32459

JOB NUMBER: 23019.1

DATE: --/--/----

TITLE: SLAB EDGE PLAN: LEVEL 200 - PART "B"

SHEET: A002B

A2 | SLAB EDGE PLAN: LEVEL 200 - PART "B"

A002B | 1/8" = 1'-0"

PROJECT NORTH

K:\Projects\23\23019\DWGs\Serenity_Bldg-1_Inn\Sheets\23019.1-A002B.dwg Plotted: Nov. 13, 2025 - 6:07pm by ColebLawrence

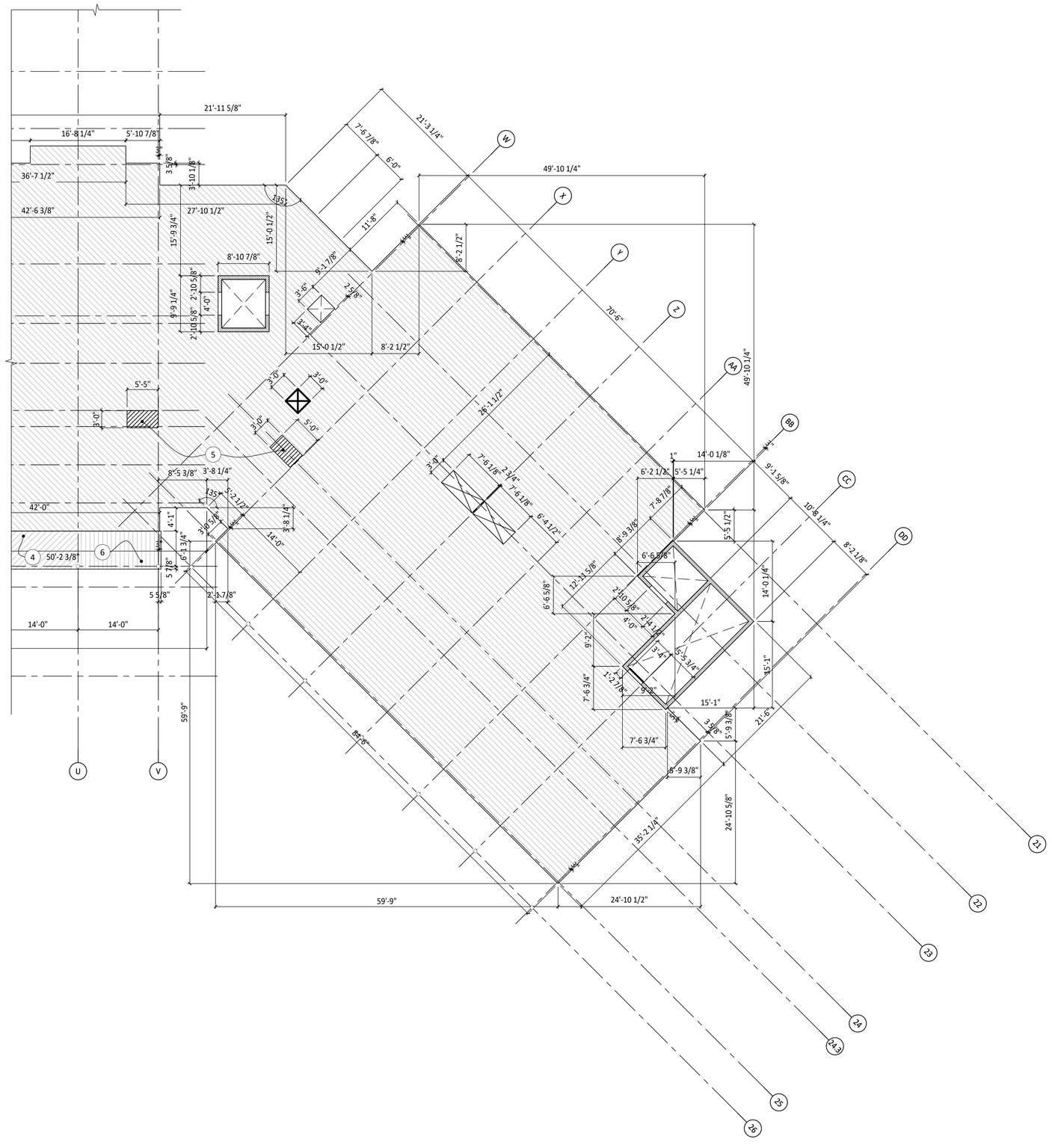

SHEET NOTES / LEGEND

1. CONC SLAB EDGE ALIGNS W/ GRIDLINE
2. COLUMN FACE ALIGNS W/ GRIDLINE
3. EDGE OF BEARING WALL STUD ALIGNED W/ EDGE OF SLAB
4. CONC SLAB, 1/2" SLAB STEP BELOW MAIN SLAB & SLOPES 1/8" : 12" AWAY FROM BLDG, BROOM FINISH W/ PEDESTRIAN TRAFFIC COATING
5. RECESSED SLABS AT ADA SHOWERS, 3"
6. CONC SLAB, 1/4" SLAB STEP BELOW MAIN SLAB FOR ADA UNITS & SLOPES 1/8" : 12" AWAY FROM BLDG, BROOM FINISH W/ PEDESTRIAN TRAFFIC COATING

LEGEND

101	DOOR / CASED OPENING	#	WINDOW TAG
A#	WALL PARTITION TAG	L#	LOUVER TAG
101	ROOM NUMBER TAG	SLOPE	DIRECTION OF SLOPEDFLOOR

AD	AREA DRAIN	EF	EXHAUST FAN
CU	CONDENSING UNIT	HB	HOSE BIBB
FE	FIRE EXTINGUISHER	POS	POINT OF SALE
FD	FLOOR DRAIN	WH	WATER HEATER

GENERAL NOTES

A. ALL FURNITURE IS BY OWNER

B. HOTEL ROOM TYPE MATRIX, C4/A114

C. INTERIOR PARTITION TYPES TO BE TYPE "A", U.N.O - SEE A1/A851

D. TOP OF PARTITION DETAILS, SEE A1/A861

E. FIRE EXTINGUISHER DETAILS, SEE A4/A871

F. REFER TO SHEETS G104 - G107 FOR ADA REQUIRED DIMENSIONS

G. TYP DOOR HINGE INSTALL DIMENSION @ PERPENDICULAR WALLS, E6/A871

H. DOOR SCHEDULES ON SHEETS A801 & A802

I. METAL STUD WALL FRAMING ADDITIONAL DETAILS ON SHEETS A871 & A872

J. UL PENETRATIONS & UL ASSEMBLIES: SEE SHEETS A881 - A885

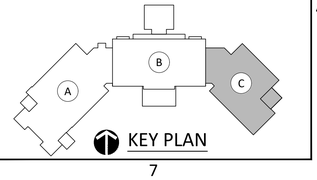

KUO DIEDRICH CHI
730 PEACHTREE STREET, NE
STUDIO 325
ATLANTA, GEORGIA 30308
678.244.6270
www.KDCarchitects.com

ARCHITECT:

Mark A Diedrich

Digitally signed by Mark A Diedrich
Date: 2025.11.14 15:31:36 -05'00'

ARCH. REG: AR91344

CONSULTANT:

REVISIONS

DATE:	DESCRIPTION:
10/18/24	SCHEMATIC DESIGN
6/5/25	DESIGN DEVELOPMENT
10/23/25	50% CONSTRUCTION DOCS
11/14/25	PERMIT SET

PROJECT:

SERENITY SEASIDE RESORT

BUILDING #1

THE INN

186 SOUTH BAY SHORE DRIVE, EASTPOINT, FL 32328

Serenity Seaside Operations, LLC
174 Watercolor Way, PMB 410
Santa Rosa Beach, Florida 32459

JOB NUMBER: 23019.1

DATE: --/--/----

TITLE: SLAB EDGE PLAN: LEVEL 200 - PART "C"

SHEET: A002C

A2 | SLAB EDGE PLAN: LEVEL 200 - PART "C"
A002C | 1/8" = 1'-0"

PROJECT NORTH

K:\Projects\23\23019\DWGs\Serenity_Bldg-1_Inn\Sheets\23019.1-A002C.dwg Plotted: Nov 13, 2025 - 8:07pm by ColebLawrence

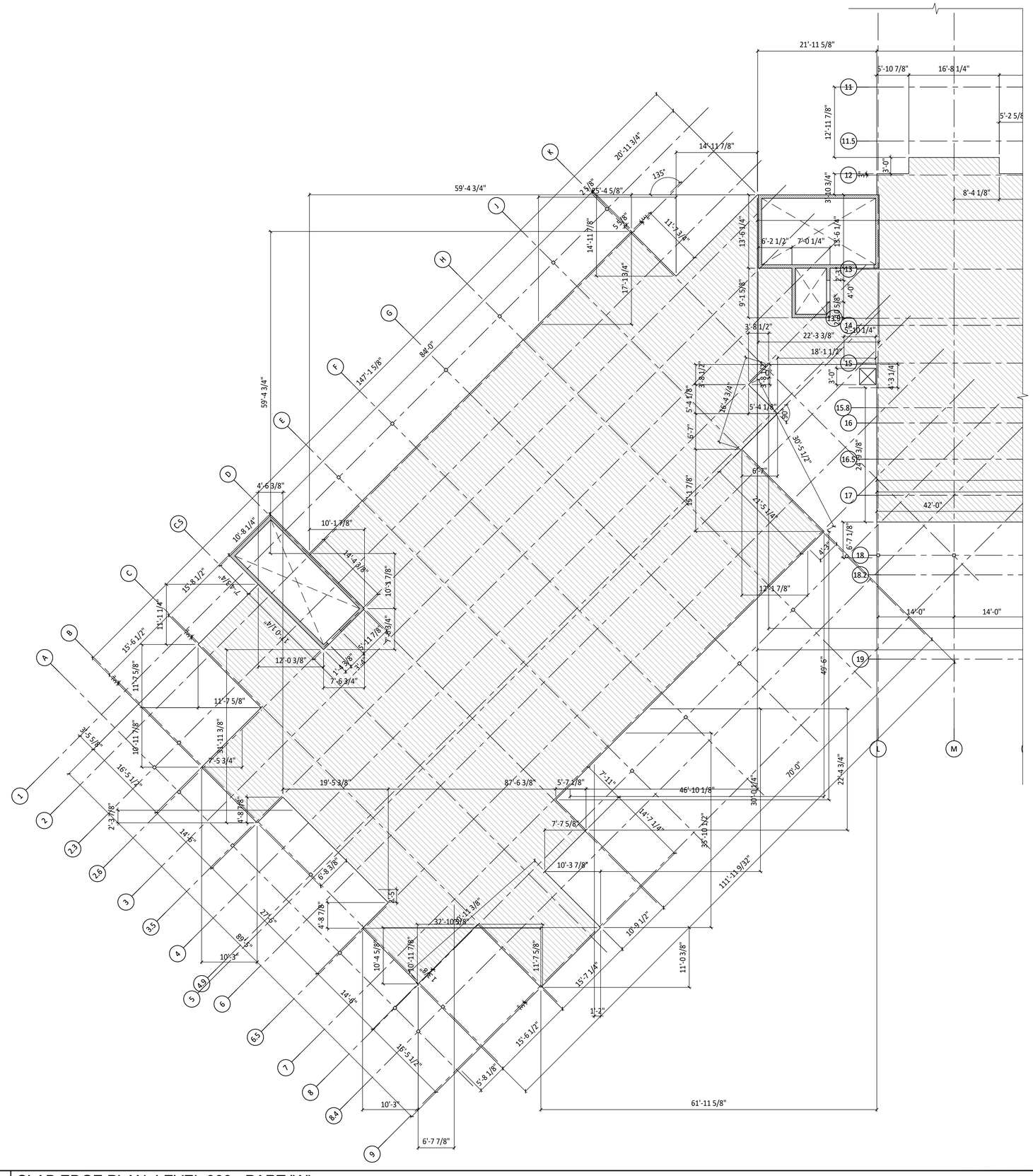

SHEET NOTES / LEGEND

1. CONC SLAB EDGE ALIGNS W/ GRIDLINE
2. COLUMN FACE ALIGNS W/ GRIDLINE
3. EDGE OF BEARING WALL STUD ALIGNED W/ EDGE OF SLAB

LEGEND

101	DOOR / CASED OPENING	#	WINDOW TAG
A#	WALL PARTITION TAG	L#	LOUVER TAG
101	ROOM NUMBER TAG	SLOPE	DIRECTION OF SLOPEDFLOOR

AD	AREA DRAIN	EF	EXHAUST FAN
CU	CONDENSING UNIT	HB	HOSE BIBB
FE	FIRE EXTINGUISHER	POS	POINT OF SALE
FD	FLOOR DRAIN	WH	WATER HEATER

GENERAL NOTES

A. ALL FURNITURE IS BY OWNER

B. HOTEL ROOM TYPE MATRIX, C4/A114

C. INTERIOR PARTITION TYPES TO BE TYPE "A", U.N.O - SEE A1/A851

D. TOP OF PARTITION DETAILS, SEE A1/A861

E. FIRE EXTINGUISHER DETAILS, SEE A4/A871

F. REFER TO SHEETS G104 - G107 FOR ADA REQUIRED DIMENSIONS

G. TYP DOOR HINGE INSTALL DIMENSION @ PERPENDICULAR WALLS, E6/A871

H. DOOR SCHEDULES ON SHEETS A801 & A802

I. METAL STUD WALL FRAMING ADDITIONAL DETAILS ON SHEETS A871 & A872

J. UL PENETRATIONS & UL ASSEMBLIES: SEE SHEETS A881 - A885

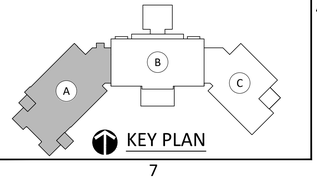

KEY PLAN

KUO DIEDRICH CHI
730 PEACHTREE STREET, NE
STUDIO 325
ATLANTA, GEORGIA 30308
678.244.6270
www.KDCarchitects.com

ARCHITECT:

Mark A Diedrich

Digitally signed by Mark A Diedrich
Date: 2025.11.14 15:31:47 -05'00'

ARCH. REG: AR91344

CONSULTANT:

REVISIONS	
DATE:	DESCRIPTION:
10/18/24	SCHEMATIC DESIGN
6/5/25	DESIGN DEVELOPMENT
10/23/25	50% CONSTRUCTION DOCS
11/14/25	PERMIT SET

PROJECT:

SERENITY SEASIDE RESORT

BUILDING #1

THE INN

186 SOUTH BAY SHORE DRIVE, EASTPOINT, FL 32328

Serenity Seaside Operations, LLC
174 Watercolor Way, PMB 410
Santa Rosa Beach, Florida 32459

JOB NUMBER: 23019.1

DATE: --/--/----

TITLE: SLAB EDGE PLAN: LEVEL 300 - PART "A"

SHEET: A003A

A2 | SLAB EDGE PLAN: LEVEL 300 - PART "A"
A003A | 1/8" = 1'-0"

PROJECT NORTH

K:\Projects\23\23019\OWGs\Serenity_Bldg-1_Inn\Sheets\23019.1-A003A.dwg Plotted: Nov 13, 2025 - 8:07pm by ColebLawrence

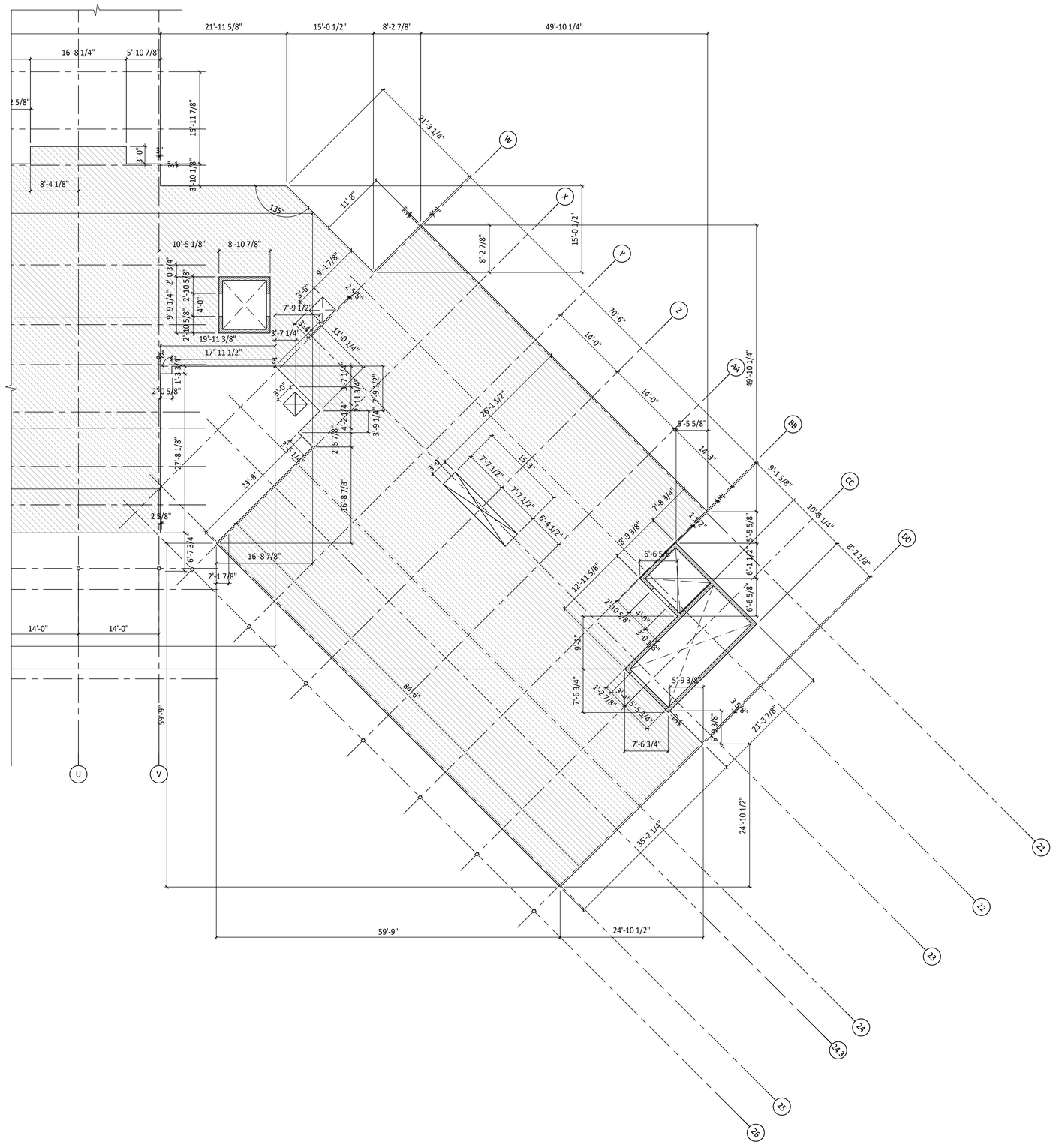

SHEET NOTES / LEGEND

1. CONC SLAB EDGE ALIGNS W/ GRIDLINE
2. COLUMN FACE ALIGNS W/ GRIDLINE
3. EDGE OF BEARING WALL STUD ALIGNED W/ EDGE OF SLAB

LEGEND

101	DOOR / CASED OPENING	#	WINDOW TAG
A#	WALL PARTITION TAG	L#	LOUVER TAG
101	ROOM NUMBER TAG	SLOPE	DIRECTION OF SLOPEDFLOOR

AD	AREA DRAIN	EF	EXHAUST FAN
CU	CONDENSING UNIT	HB	HOSE BIBB
FE	FIRE EXTINGUISHER	POS	POINT OF SALE
FD	FLOOR DRAIN	WH	WATER HEATER

GENERAL NOTES

A. ALL FURNITURE IS BY OWNER

B. HOTEL ROOM TYPE MATRIX, C4/A114

C. INTERIOR PARTITION TYPES TO BE TYPE "A", U.N.O - SEE A1/A851

D. TOP OF PARTITION DETAILS, SEE A1/A861

E. FIRE EXTINGUISHER DETAILS, SEE A4/A871

F. REFER TO SHEETS G104 - G107 FOR ADA REQUIRED DIMENSIONS

G. TYP DOOR HINGE INSTALL DIMENSION @ PERPENDICULAR WALLS, E6/A871

H. DOOR SCHEDULES ON SHEETS A801 & A802

I. METAL STUD WALL FRAMING ADDITIONAL DETAILS ON SHEETS A871 & A872

J. UL PENETRATIONS & UL ASSEMBLIES: SEE SHEETS A881 - A885

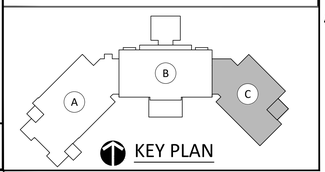

KEY PLAN

KUO DIEDRICH CHI
730 PEACHTREE STREET, NE
STUDIO 325
ATLANTA, GEORGIA 30308
678.244.6270
www.KDCarchitects.com

ARCHITECT:

Mark A Diedrich

Digitally signed by Mark A Diedrich
Date: 2025.11.14 15:32:10 -05'00'

ARCH. REG: AR91344

CONSULTANT:

REVISIONS

DATE:	DESCRIPTION:
10/18/24	SCHEMATIC DESIGN
6/5/25	DESIGN DEVELOPMENT
10/23/25	50% CONSTRUCTION DOCS
11/14/25	PERMIT SET

PROJECT:

SERENITY SEASIDE RESORT

BUILDING #1

THE INN

186 SOUTH BAY SHORE DRIVE, EASTPOINT, FL 32328

Serenity Seaside Operations, LLC
174 Watercolor Way, PMB 410
Santa Rosa Beach, Florida 32459

JOB NUMBER: 23019.1

DATE: --/--/----

TITLE: SLAB EDGE PLAN: LEVEL 300 - PART "C"

SHEET: A003C

A2 | SLAB EDGE PLAN: LEVEL 300 - PART "C"
A003C | 1/8" = 1'-0"

PROJECT NORTH

K:\Projects\23\23019\DWGs\Serenity_Bldg-1_Inn\Sheets\23019.1-A003C.dwg Plotted: Nov 13, 2025 - 6:07pm by CalebLawrence

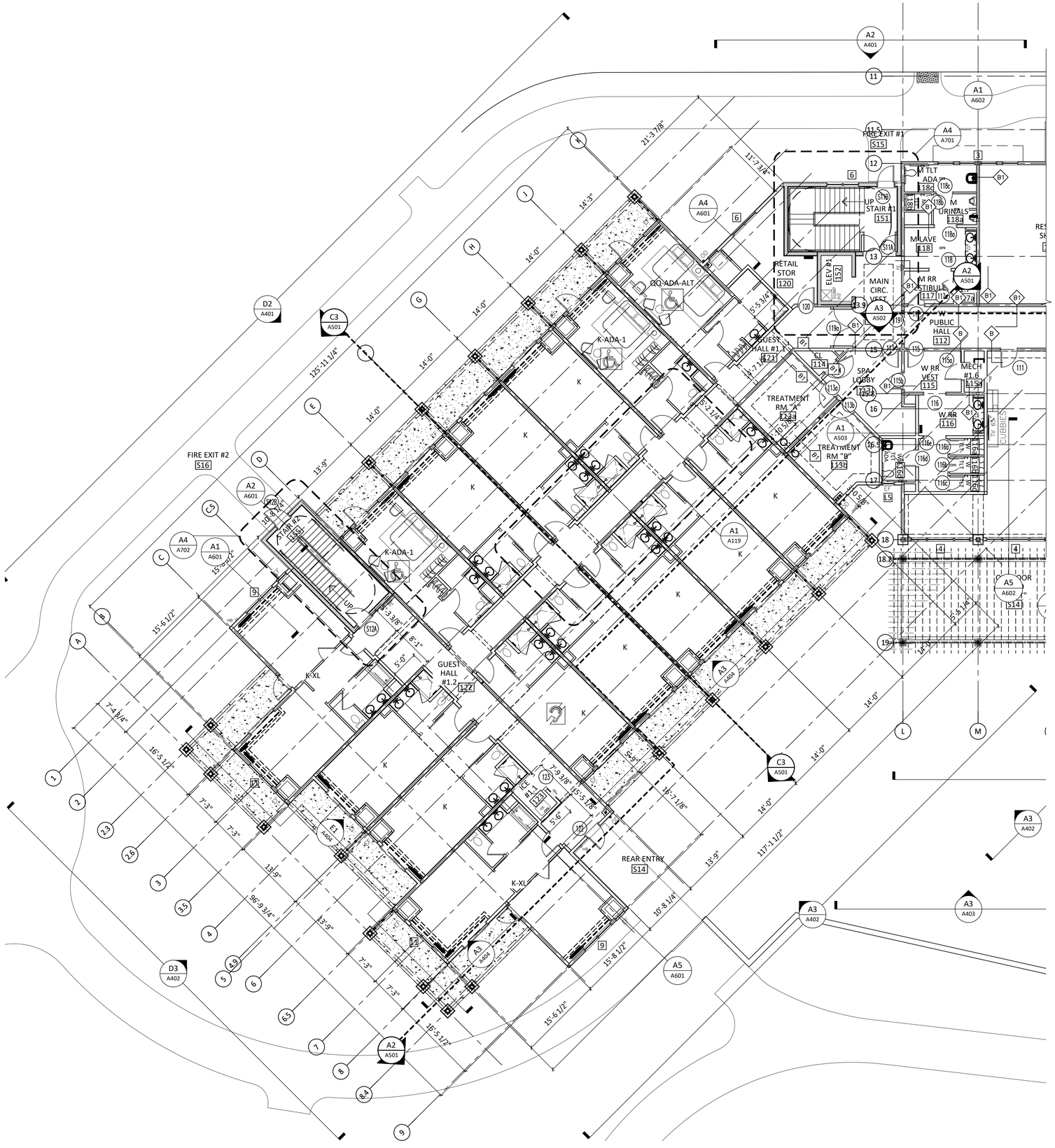
A2 A401
A1 A602
A4 A701
A4 A601
A4 A702
A1 A601
A2 A601
A2 A501
A3 A502
A1 A503
A1 A119
A5 A602
A3 A403
A3 A402
A5 A601
C3 A501
D2 A401
D3 A402
E1 A404
FIRE EXIT #1 S15
FIRE EXIT #2 S16
REAR ENTRY S14
UP STAIR #1 151
STAIR #2 153
RETAIL STOR 120
ELEV #1 152
MAIN CIRC. VEST. 113
M TLT ADA 118c
M URINALS 118a
M LAVE 118
M RR VESTIBULE 117
W PUBLIC HALL 112
W RR VEST 115
W RR 116
SPA LOBBY 113a
MECH #1.6 114
CL 114
TREATMENT RM "A" 138
TREATMENT RM "B" 139
GUEST HALL #1.1 121
GUEST HALL #1.2 122
CE #1.1 123
QQ-ADA-ALT
K-ADA-1
K-XL
K
21'-3 7/8"
11'-7 3/4"
14'-3"
14'-0"
125'-11 1/4"
13'-9"
15'-6 1/2"
16'-5 1/4"
7'-4 1/4"
7'-3"
96'-9 3/4"
117'-1 1/2"
10'-8 1/4"
15'-8 1/2"
14'-7 1/8"
15'-5 3/4"
7'-9 3/8"
5'-6"
8'-1"
5'-0"
10'-3 1/8"
5'-5 1/4"
5'-3 1/8"
5'-5 3/4"
5'-8 1/4"
5'-8 1/4"
5'-9"
5'-8"
5'-8 1/4"
5'-8 1/4"
5'-8 1/4

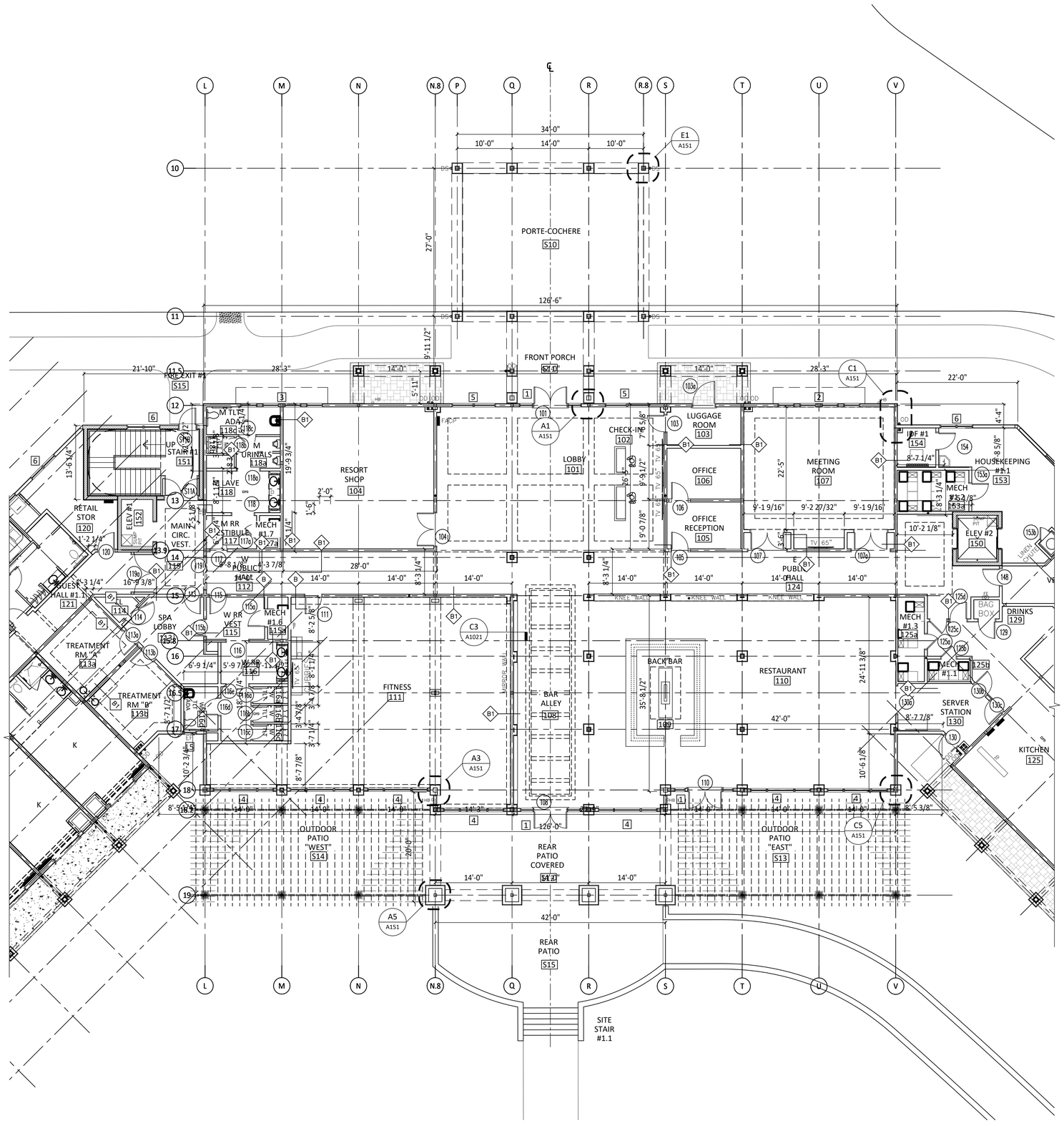

A2 FLOOR PLAN: LEVEL 100 - "PLAN B"

A101B | 1/8" = 1'-0"

SHEET NOTES / LEGEND

1. ALL WALLS ARE TYPE "A" UNLESS NOTED OTHERWISE

LEGEND

101	DOOR / CASED OPENING	#	WINDOW TAG
A#	WALL PARTITION TAG	L#	LOUVER TAG
101	ROOM NUMBER TAG	SLOPE	DIRECTION OF SLOPED FLOOR

AD	AREA DRAIN	EF	EXHAUST FAN
CU	CONDENSING UNIT	HB	HOSE BIBB
FE	FIRE EXTINGUISHER	POS	POINT OF SALE
FD	FLOOR DRAIN	WH	WATER HEATER

GENERAL NOTES

A. ALL FURNITURE IS BY OWNER

B. HOTEL ROOM TYPE MATRIX, C4/A114

C. INTERIOR PARTITION TYPES TO BE TYPE "A", U.N.O - SEE A1/A851

D. TOP OF PARTITION DETAILS, SEE A1/A861

E. FIRE EXTINGUISHER DETAILS, SEE A4/A871

F. REFER TO SHEETS G104 - G107 FOR ADA REQUIRED DIMENSIONS

G. TYP DOOR HINGE INSTALL DIMENSION @ PERPENDICULAR WALLS, E6/A871

H. DOOR SCHEDULES ON SHEETS A801 & A802

I. METAL STUD WALL FRAMING ADDITIONAL DETAILS ON SHEETS A871 & A872

J. UL PENETRATIONS & UL ASSEMBLIES: SEE SHEETS A881 - A885

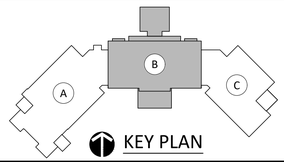

KEY PLAN

KUO DIEDRICH CHI
730 PEACHTREE STREET, NE
STUDIO 325
ATLANTA, GEORGIA 30308
678.244.6270
www.KDCarchitects.com

ARCHITECT:

ARCH. REG: AR91344

CONSULTANT:

REVISIONS

DATE:	DESCRIPTION:
10/18/24	SCHEMATIC DESIGN
6/5/25	DESIGN DEVELOPMENT
10/23/25	50% CONSTRUCTION DOCS
11/14/25	PERMIT SET

PROJECT:

SERENITY SEASIDE RESORT

BUILDING #1

THE INN

186 SOUTH BAY SHORE DRIVE, EASTPOINT, FL 32328

Serenity Seaside Operations, LLC
174 Watercolor Way, PMB 410
Santa Rosa Beach, Florida 32459

JOB NUMBER: 23019.1

DATE: --/--/----

TITLE: FLOOR PLAN: LEVEL 100 - "PLAN B"

SHEET: A101B

K:\Projects\23\23019\DWGs\Serenity_Bldg-1_inn\Sheets\23019.I-A101B.dwg Plotted: Nov 13, 2025 - 6:08pm by CalebLawrence

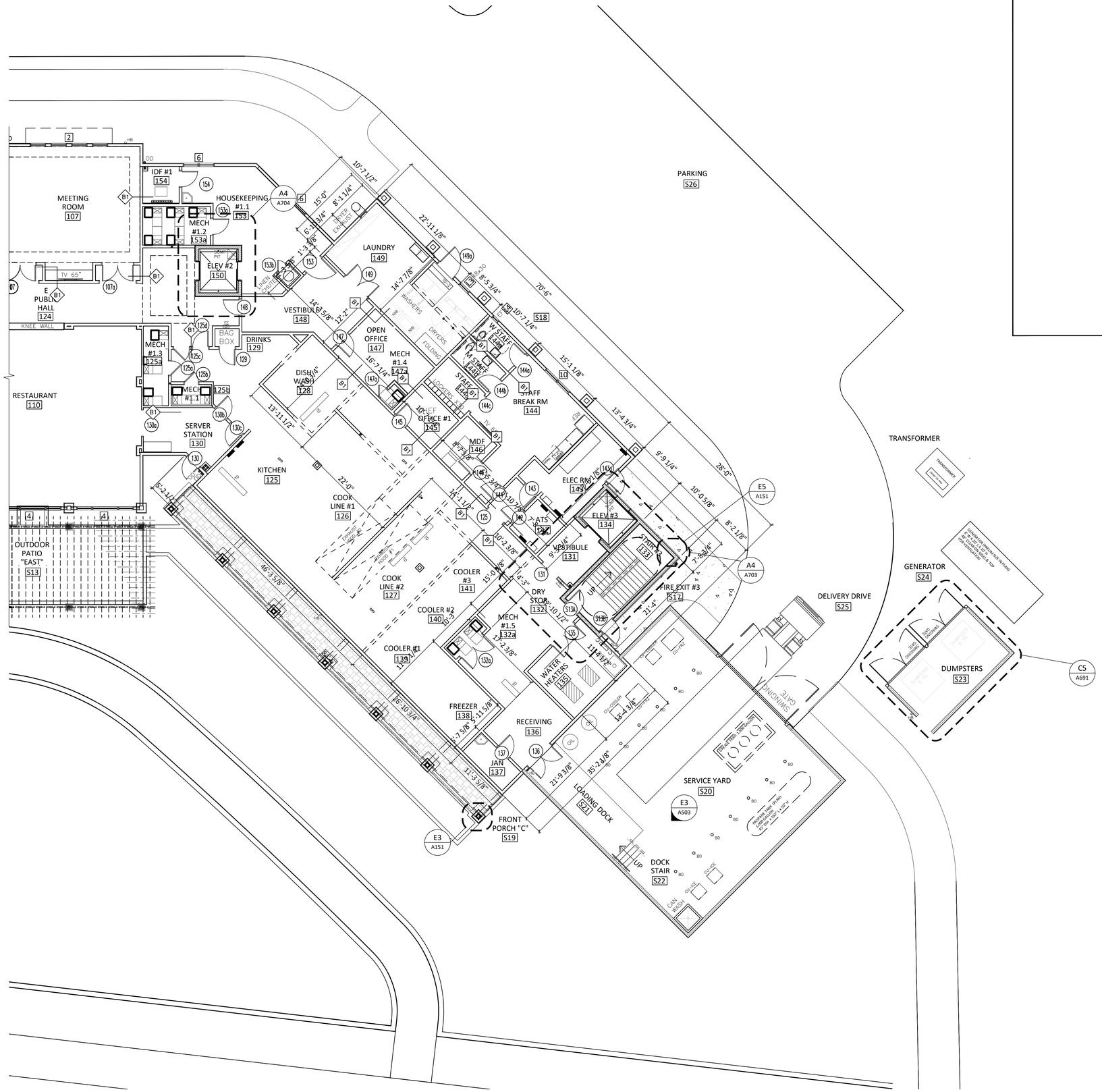

LEGEND

101	DOOR / CASED OPENING	#	WINDOW TAG
A#	WALL PARTITION TAG	L#	LOUVER TAG
101	ROOM NUMBER TAG	SLOPE	DIRECTION OF SLOPEDFLOOR

AD	AREA DRAIN	EF	EXHAUST FAN
CU	CONDENSING UNIT	HB	HOSE BIBB
FE	FIRE EXTINGUISHER	POS	POINT OF SALE
FD	FLOOR DRAIN	WH	WATER HEATER

GENERAL NOTES

A. ALL FURNITURE IS BY OWNER

B. HOTEL ROOM TYPE MATRIX, C4/A114

C. INTERIOR PARTITION TYPES TO BE TYPE "A", U.N.O - SEE A1/A851

D. TOP OF PARTITION DETAILS, SEE A1/A861

E. FIRE EXTINGUISHER DETAILS, SEE A4/A871

F. REFER TO SHEETS G104 - G107 FOR ADA REQUIRED DIMENSIONS

G. TYP DOOR HINGE INSTALL DIMENSION @ PERPENDICULAR WALLS, E6/A871

H. DOOR SCHEDULES ON SHEETS A801 & A802

I. METAL STUD WALL FRAMING ADDITIONAL DETAILS ON SHEETS A871 & A872

J. UL PENETRATIONS & UL ASSEMBLIES: SEE SHEETS A881 - A885

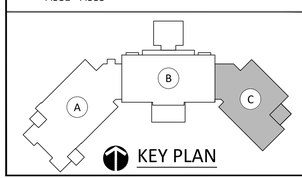

KEY PLAN

SHEET NOTES / LEGEND

1. ALL WALLS ARE TYPE "A" UNLESS NOTED OTHERWISE

KUO DIEDRICH CHI
730 PEACHTREE STREET, NE
STUDIO 325
ATLANTA, GEORGIA 30308
678.244.6270
www.KDCarchitects.com

ARCHITECT:

ARCH. REG: AR91344

CONSULTANT:

REVISIONS

DATE:	DESCRIPTION:
10/18/24	SCHEMATIC DESIGN
6/5/25	DESIGN DEVELOPMENT
10/23/25	50% CONSTRUCTION DOCS
11/14/25	PERMIT SET

PROJECT:

SERENITY SEASIDE RESORT

BUILDING #1

THE INN

186 SOUTH BAY SHORE DRIVE, EASTPOINT, FL 32328

Serenity Seaside Operations, LLC
174 Watercolor Way, PMB 410
Santa Rosa Beach, Florida 32459

JOB NUMBER: 23019.1

DATE: --/--/----

TITLE: FLOOR PLAN: LEVEL 100 - "PLAN C"

SHEET: A101C

A2	FLOOR PLAN: LEVEL 100 - "PLAN C"
A101C	1/8" = 1'-0"

PROJECT NORTH

K:\Projects\23\23019\DWGs\Serenity_Bldg-1_Inn\Sheets\23019.1-A101C.dwg Plotted: Nov 13, 2025 - 6:08pm by CalebLawrence

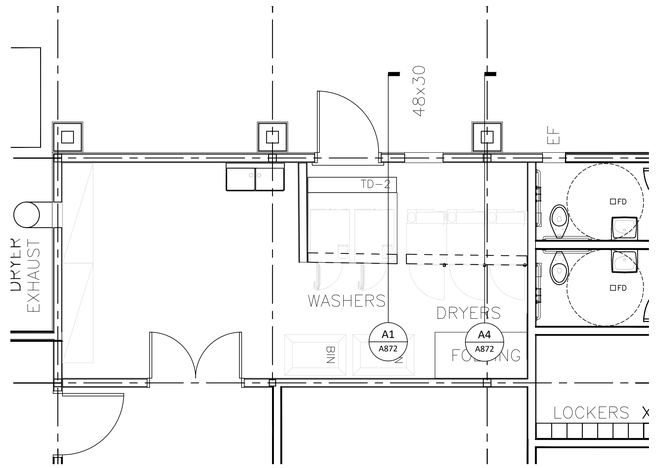

E4 | DTL PLAN @ LAUNDRY

A101 | 1/4" = 1'-0"

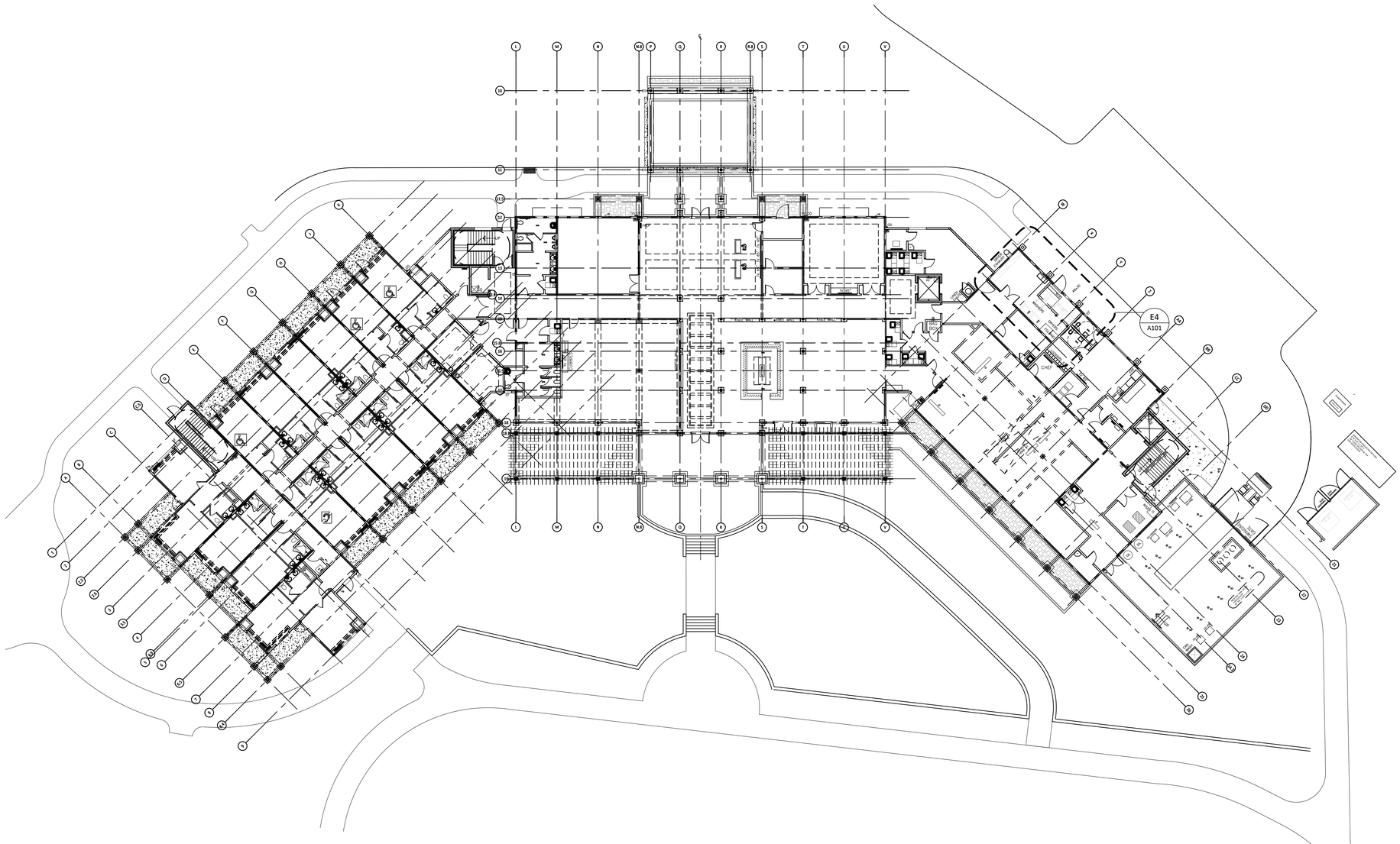

A1 | FLOOR PLAN: LEVEL 100 - COMPOSITE

A101 | 1/16" = 1'-0"

SHEET NOTES / LEGEND

1. -
2.

LEGEND

101	DOOR / CASED OPENING	#	WINDOW TAG
A#	WALL PARTITION TAG	L#	LOUVER TAG
101	ROOM NUMBER TAG	SLOPE	DIRECTION OF SLOPEDFLOOR

AD	AREA DRAIN	EF	EXHAUST FAN
CU	CONDENSING UNIT	HB	HOSE BIBB
FE	FIRE EXTINGUISHER	POS	POINT OF SALE
FD	FLOOR DRAIN	WH	WATER HEATER

GENERAL NOTES

A. ALL FURNITURE IS BY OWNER

B. HOTEL ROOM TYPE MATRIX, C4/A114

C. INTERIOR PARTITION TYPES TO BE TYPE "A", U.N.O - SEE A1/A851

D. TOP OF PARTITION DETAILS, SEE A1/A861

E. FIRE EXTINGUISHER DETAILS, SEE A4/A871

F. REFER TO SHEETS G104 - G107 FOR ADA REQUIRED DIMENSIONS

G. TYP DOOR HINGE INSTALL DIMENSION @ PERPENDICULAR WALLS, E6/A871

H. DOOR SCHEDULES ON SHEETS A801 & A802

I. METAL STUD WALL FRAMING ADDITIONAL DETAILS ON SHEETS A871 & A872

J. UL PENETRATIONS & UL ASSEMBLIES: SEE SHEETS A881 - A885

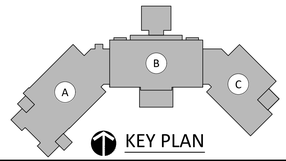

KEY PLAN

KUO DIEDRICH CHI
730 PEACHTREE STREET, NE
STUDIO 325
ATLANTA, GEORGIA 30308
678.244.6270
www.KDCarchitects.com

ARCHITECT:

ARCH. REG: AR91344

CONSULTANT:

REVISIONS

DATE:	DESCRIPTION:
10/18/24	SCHEMATIC DESIGN
6/5/25	DESIGN DEVELOPMENT
10/23/25	50% CONSTRUCTION DOCS
11/14/25	PERMIT SET

PROJECT:

SERENITY SEASIDE RESORT

BUILDING #1

THE INN

186 SOUTH BAY SHORE DRIVE, EASTPOINT, FL 32328

Serenity Seaside Operations, LLC
174 Watercolor Way, PMB 410
Santa Rosa Beach, Florida 32459

JOB NUMBER: 23019.1

DATE: --/--/----

TITLE: FLOOR PLAN: LEVEL 100 - COMPOSITE

SHEET: A101

K:\Projects\23\23019\DWGs\Serenity_Bldg-1_Inn\Sheets\23019.1-A101.dwg Plotted: Nov 13, 2025 - 6:08pm by CalebLawrence

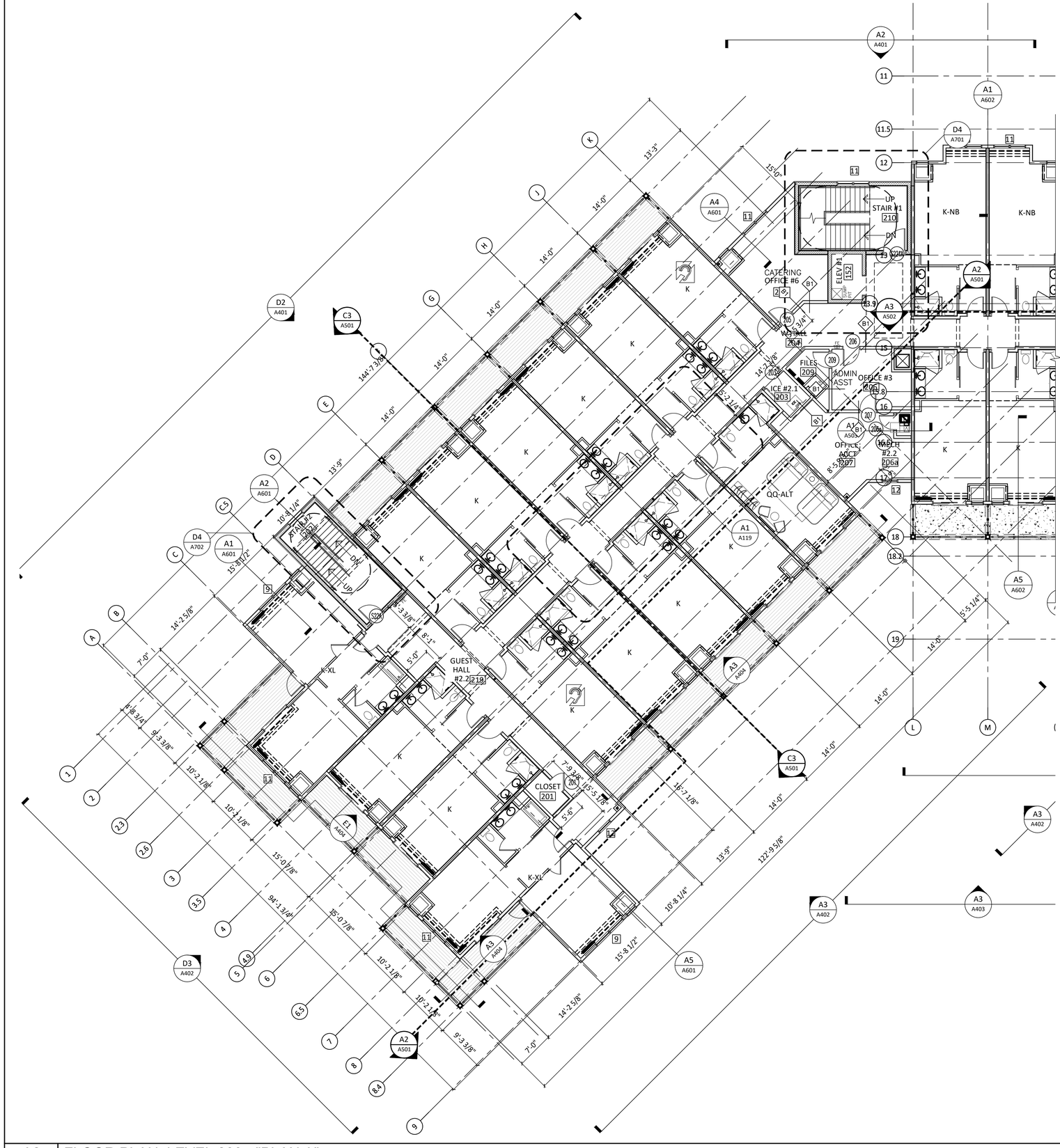

A2	FLOOR PLAN: LEVEL 200 - "PLAN A"
A102A	1/8" = 1'-0"

SHEET NOTES / LEGEND

1. ALL WALLS ARE TYPE "A" UNLESS NOTED OTHERWISE

LEGEND

101	DOOR / CASED OPENING	#	WINDOW TAG
A#	WALL PARTITION TAG	L#	LOUVER TAG
101	ROOM NUMBER TAG	SLOPE	DIRECTION OF SLOPEDFLOOR

AD	AREA DRAIN	EF	EXHAUST FAN
CU	CONDENSING UNIT	HB	HOSE BIBB
FE	FIRE EXTINGUISHER	POS	POINT OF SALE
FD	FLOOR DRAIN	WH	WATER HEATER

GENERAL NOTES

A. ALL FURNITURE IS BY OWNER

B. HOTEL ROOM TYPE MATRIX, C4/A114

C. INTERIOR PARTITION TYPES TO BE TYPE "A", U.N.O - SEE A1/A851

D. TOP OF PARTITION DETAILS, SEE A1/A861

E. FIRE EXTINGUISHER DETAILS, SEE A4/A871

F. REFER TO SHEETS G104 - G107 FOR ADA REQUIRED DIMENSIONS

G. TYP DOOR HINGE INSTALL DIMENSION @ PERPENDICULAR WALLS, E6/A871

H. DOOR SCHEDULES ON SHEETS A801 & A802

I. METAL STUD WALL FRAMING ADDITIONAL DETAILS ON SHEETS A871 & A872

J. UL PENETRATIONS & UL ASSEMBLIES: SEE SHEETS A881 - A885

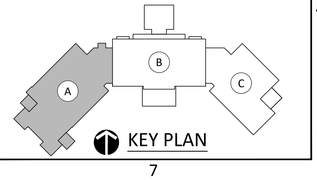

KEY PLAN

KUO DIEDRICH CHI
730 PEACHTREE STREET, NE
STUDIO 325
ATLANTA, GEORGIA 30308
678.244.6270
www.KDCarchitects.com

ARCHITECT:

ARCH. REG: AR91344

CONSULTANT:

REVISIONS	
DATE:	DESCRIPTION:
10/18/24	SCHEMATIC DESIGN
6/5/25	DESIGN DEVELOPMENT
10/23/25	50% CONSTRUCTION DOCS
11/14/25	PERMIT SET

PROJECT:

SERENITY SEASIDE RESORT

BUILDING #1

THE INN

186 SOUTH BAY SHORE DRIVE, EASTPOINT, FL 32328

Serenity Seaside Operations, LLC
174 Watercolor Way, PMB 410
Santa Rosa Beach, Florida 32459

JOB NUMBER: 23019.1

DATE: --/--/----

TITLE: FLOOR PLAN: LEVEL 200 - "PLAN A"

SHEET: A102A

K:\Projects\23\23019\OWGs\Serenity_Bldg-1_Inn\Sheets\23019.1-A102A.dwg Plotted: Nov 13, 2025 - 6:09pm by ColebLawrence

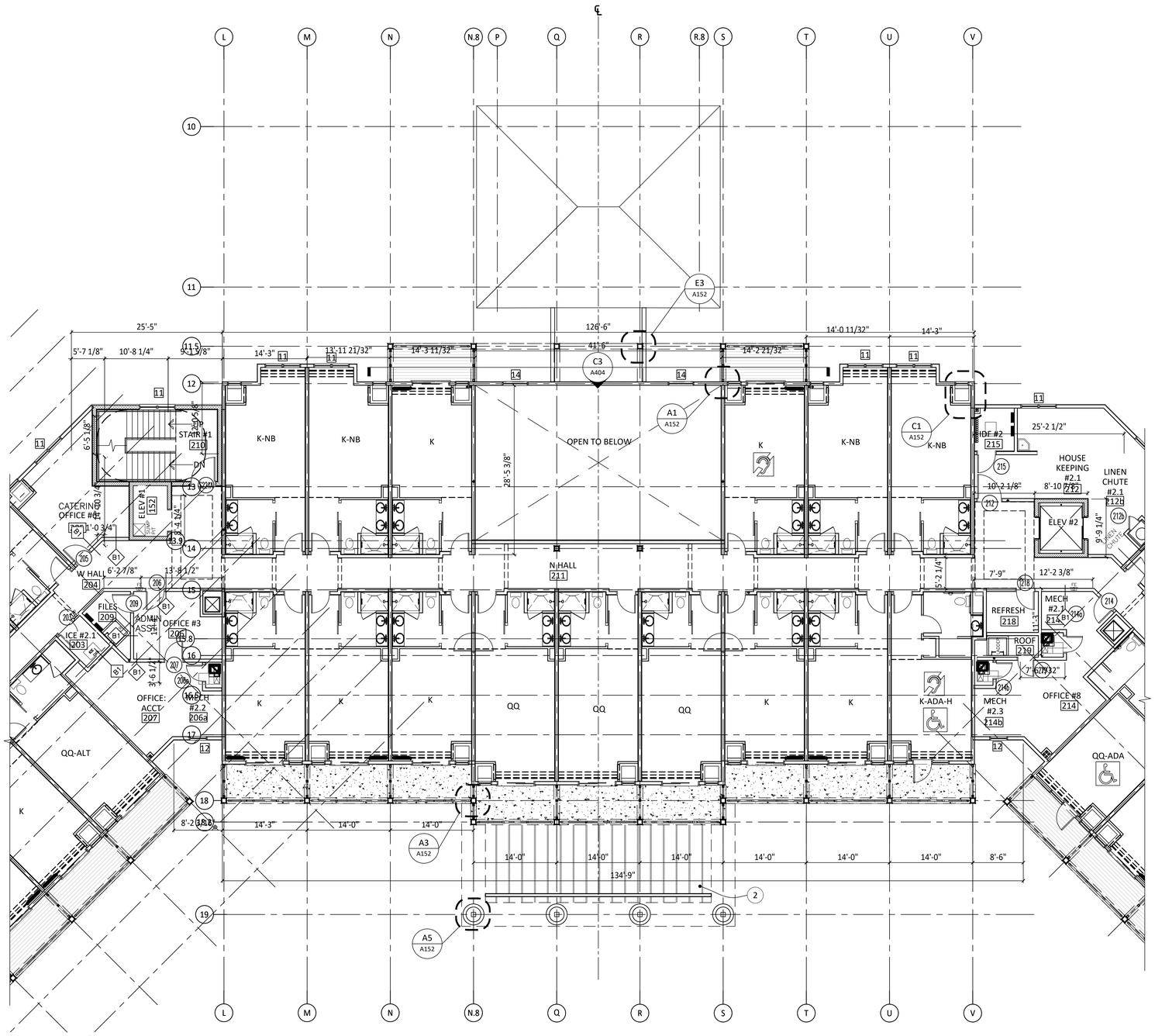

SHEET NOTES / LEGEND

1. ALL WALLS ARE TYPE "A" UNLESS NOTED OTHERWISE
2. STANDING SEAM METAL ROOF OVER LEVEL 100 COVERED DINING

LEGEND

101	DOOR / CASED OPENING	#	WINDOW TAG
A#	WALL PARTITION TAG	L#	LOUVER TAG
101	ROOM NUMBER TAG	SLOPE	DIRECTION OF SLOPED FLOOR

AD	AREA DRAIN	EF	EXHAUST FAN
CU	CONDENSING UNIT	HB	HOSE BIBB
FE	FIRE EXTINGUISHER	POS	POINT OF SALE
FD	FLOOR DRAIN	WH	WATER HEATER

GENERAL NOTES

A. ALL FURNITURE IS BY OWNER

B. HOTEL ROOM TYPE MATRIX, C4/A114

C. INTERIOR PARTITION TYPES TO BE TYPE "A", U.N.O - SEE A1/A851

D. TOP OF PARTITION DETAILS, SEE A1/A861

E. FIRE EXTINGUISHER DETAILS, SEE A4/A871

F. REFER TO SHEETS G104 - G107 FOR ADA REQUIRED DIMENSIONS

G. TYP DOOR HINGE INSTALL DIMENSION @ PERPENDICULAR WALLS, E6/A871

H. DOOR SCHEDULES ON SHEETS A801 & A802

I. METAL STUD WALL FRAMING ADDITIONAL DETAILS ON SHEETS A871 & A872

J. UL PENETRATIONS & UL ASSEMBLIES: SEE SHEETS A881 - A885

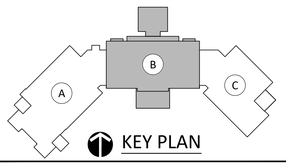

KEY PLAN

A2	FLOOR PLAN: LEVEL 200 - "PLAN B"
A102B	1/8" = 1'-0"

PROJECT NORTH

KUO DIEDRICH CHI
730 PEACHTREE STREET, NE
STUDIO 325
ATLANTA, GEORGIA 30308
678.244.6270
www.KDCarchitects.com

ARCHITECT:

ARCH. REG: AR91344

CONSULTANT:

REVISIONS

DATE:	DESCRIPTION:
10/18/24	SCHEMATIC DESIGN
6/5/25	DESIGN DEVELOPMENT
10/23/25	50% CONSTRUCTION DOCS
11/14/25	PERMIT SET

PROJECT:

SERENITY SEASIDE RESORT

BUILDING #1

THE INN

186 SOUTH BAY SHORE DRIVE, EASTPOINT, FL 32328

Serenity Seaside Operations, LLC
174 Watercolor Way, PMB 410
Santa Rosa Beach, Florida 32459

JOB NUMBER: 23019.1

DATE: --/--/----

TITLE: FLOOR PLAN: LEVEL 200 - "PLAN B"

SHEET: A102B

K:\Projects\23\23019\DWGs\Serenity_Bldg-1_Inn\Sheets\23019.1-A102B.dwg Plotted: Nov 13, 2025 - 6:09pm by ColeBlawrence

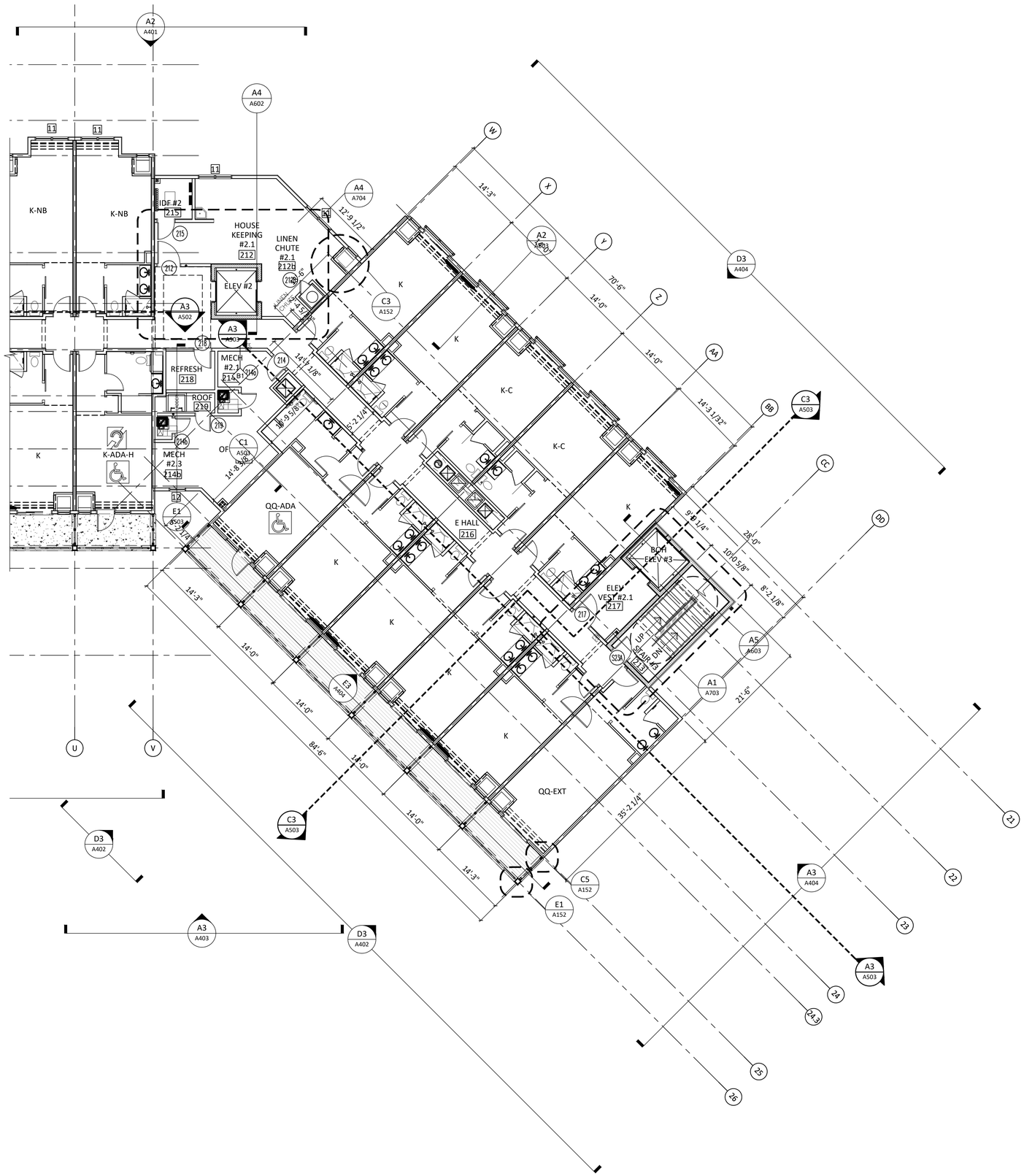

SHEET NOTES / LEGEND

1. ALL WALLS ARE TYPE "A" UNLESS NOTED OTHERWISE

LEGEND

101	DOOR / CASED OPENING	#	WINDOW TAG
A#	WALL PARTITION TAG	L#	LOUVER TAG
101	ROOM NUMBER TAG	SLOPE	DIRECTION OF SLOPEDFLOOR

AD	AREA DRAIN	EF	EXHAUST FAN
CU	CONDENSING UNIT	HB	HOSE BIBB
FE	FIRE EXTINGUISHER	POS	POINT OF SALE
FD	FLOOR DRAIN	WH	WATER HEATER

GENERAL NOTES

A. ALL FURNITURE IS BY OWNER

B. HOTEL ROOM TYPE MATRIX, C4/A114

C. INTERIOR PARTITION TYPES TO BE TYPE "A", U.N.O - SEE A1/A851

D. TOP OF PARTITION DETAILS, SEE A1/A861

E. FIRE EXTINGUISHER DETAILS, SEE A4/A871

F. REFER TO SHEETS G104 - G107 FOR ADA REQUIRED DIMENSIONS

G. TYP DOOR HINGE INSTALL DIMENSION @ PERPENDICULAR WALLS, E6/A871

H. DOOR SCHEDULES ON SHEETS A801 & A802

I. METAL STUD WALL FRAMING ADDITIONAL DETAILS ON SHEETS A871 & A872

J. UL PENETRATIONS & UL ASSEMBLIES: SEE SHEETS A881 - A885

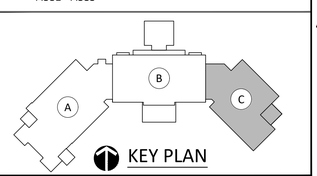

KEY PLAN

KUO DIEDRICH CHI
730 PEACHTREE STREET, NE
STUDIO 325
ATLANTA, GEORGIA 30308
678.244.6270
www.KDCarchitects.com

ARCHITECT:

ARCH. REG: AR91344

CONSULTANT:

REVISIONS

DATE:	DESCRIPTION:
10/18/24	SCHEMATIC DESIGN
6/5/25	DESIGN DEVELOPMENT
10/23/25	50% CONSTRUCTION DOCS
11/14/25	PERMIT SET

PROJECT:

SERENITY SEASIDE RESORT

BUILDING #1

THE INN

186 SOUTH BAY SHORE DRIVE, EASTPOINT, FL 32328

Serenity Seaside Operations, LLC
174 Watercolor Way, PMB 410
Santa Rosa Beach, Florida 32459

JOB NUMBER: 23019.1

DATE: --/--/----

TITLE: FLOOR PLAN: LEVEL 200 - "PLAN C"

SHEET: A102C

A2 | FLOOR PLAN: LEVEL 200 - "PLAN C"
A102C | 1/8" = 1'-0"

PROJECT NORTH

K:\Projects\23\23019\DWGs\Serenity_Bldg-1_Inn\Sheets\23019.1-A102C.dwg Plotted: Nov 13, 2025 - 6:09pm by CateLawrence

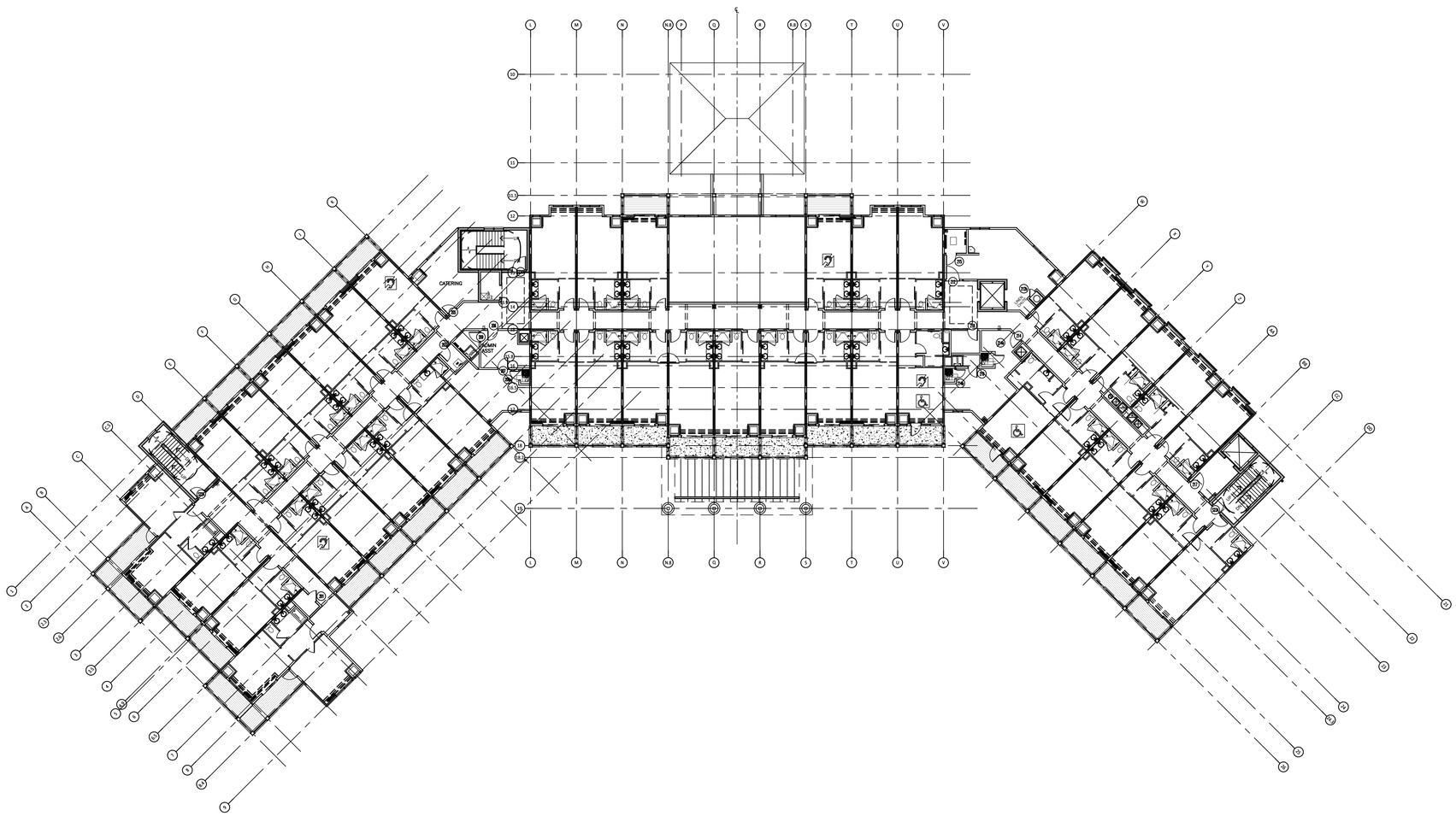

SHEET NOTES / LEGEND

1. -

LEGEND

101	DOOR / CASED OPENING	#	WINDOW TAG
A#	WALL PARTITION TAG	L#	LOUVER TAG
101	ROOM NUMBER TAG	SLOPE	DIRECTION OF SLOPEDFLOOR

AD	AREA DRAIN	EF	EXHAUST FAN
CU	CONDENSING UNIT	HB	HOSE BIBB
FE	FIRE EXTINGUISHER	POS	POINT OF SALE
FD	FLOOR DRAIN	WH	WATER HEATER

GENERAL NOTES

A. ALL FURNITURE IS BY OWNER

B. HOTEL ROOM TYPE MATRIX, C4/A114

C. INTERIOR PARTITION TYPES TO BE TYPE "A", U.N.O - SEE A1/A851

D. TOP OF PARTITION DETAILS, SEE A1/A861

E. FIRE EXTINGUISHER DETAILS, SEE A4/A871

F. REFER TO SHEETS G104 - G107 FOR ADA REQUIRED DIMENSIONS

G. TYP DOOR HINGE INSTALL DIMENSION @ PERPENDICULAR WALLS, E6/A871

H. DOOR SCHEDULES ON SHEETS A801 & A802

I. METAL STUD WALL FRAMING ADDITIONAL DETAILS ON SHEETS A871 & A872

J. UL PENETRATIONS & UL ASSEMBLIES: SEE SHEETS A881 - A885

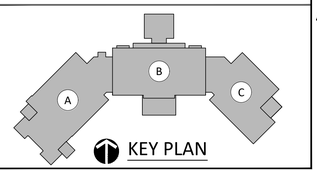

KEY PLAN

A1	FLOOR PLAN: LEVEL 200 - COMPOSITE
A102	1/16" = 1'-0"

PROJECT NORTH

KUO DIEDRICH CHI

730 PEACHTREE STREET, NE
STUDIO 325
ATLANTA, GEORGIA 30308
678.244.6270

www.KDCarchitects.com

ARCHITECT:

ARCH. REG: AR91344

CONSULTANT:

REVISIONS

DATE:	DESCRIPTION:
10/18/24	SCHEMATIC DESIGN
6/5/25	DESIGN DEVELOPMENT
10/23/25	50% CONSTRUCTION DOCS
11/14/25	PERMIT SET

PROJECT:

SERENITY SEASIDE RESORT

BUILDING #1

THE INN

186 SOUTH BAY SHORE DRIVE, EASTPOINT, FL 32328

Serenity Seaside Operations, LLC
174 Watercolor Way, PMB 410
Santa Rosa Beach, Florida 32459

JOB NUMBER: 23019.1

DATE: --/--/----

TITLE: FLOOR PLAN: LEVEL 200 - COMPOSITE

SHEET: A102

K:\Projects\23\23019\DWGs\Serenity_Bldg-1_Inn\Sheets\23019.1-A102.dwg Plotted: Nov 13, 2025 - 6:09pm by ColebLawrence

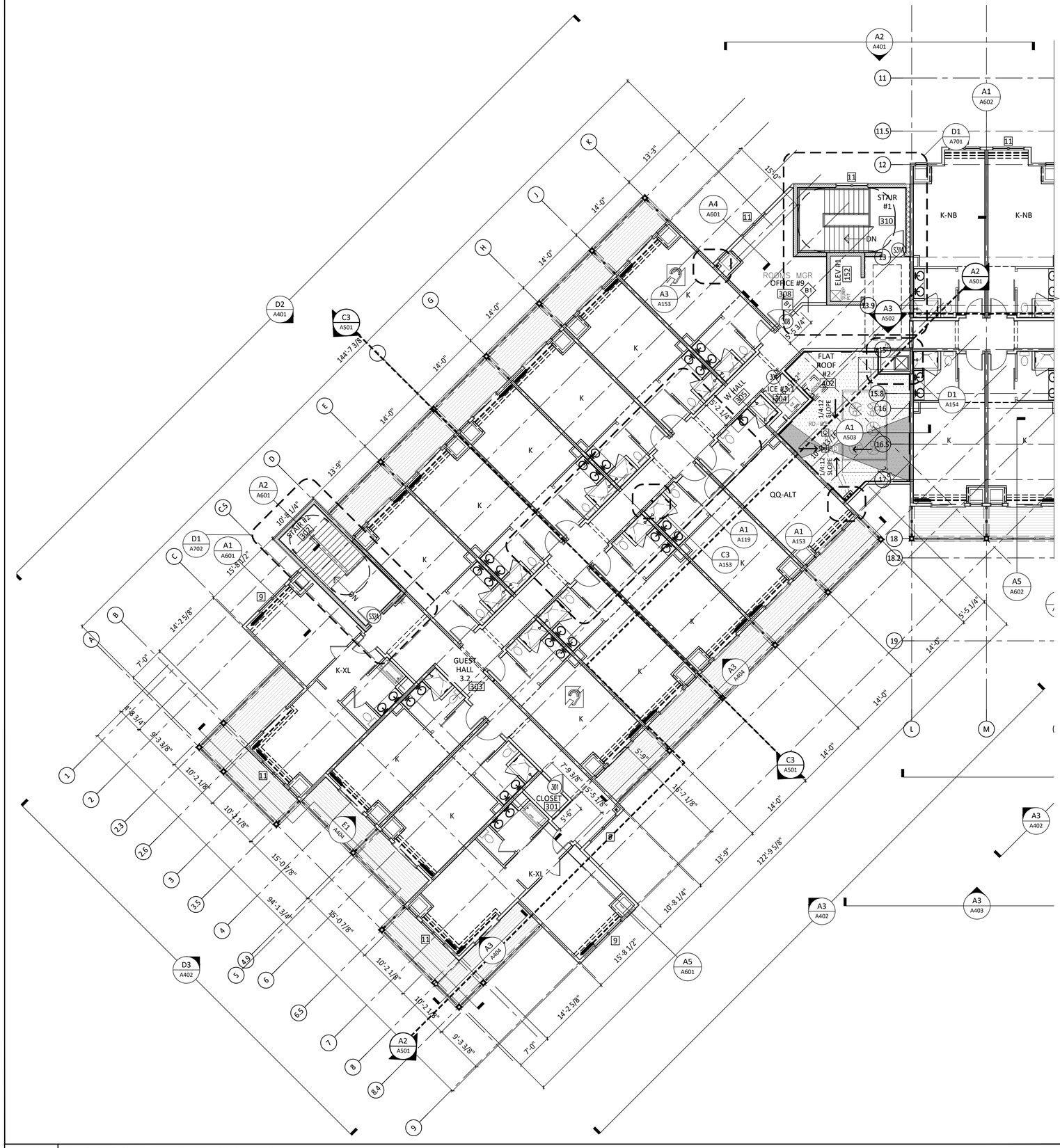

SHEET NOTES / LEGEND

1. ALL WALLS ARE TYPE "A" UNLESS NOTED OTHERWISE

LEGEND

101	DOOR / CASED OPENING	#	WINDOW TAG
A#	WALL PARTITION TAG	L#	LOUVER TAG
101	ROOM NUMBER TAG	SLOPE	DIRECTION OF SLOPEDFLOOR

AD	AREA DRAIN	EF	EXHAUST FAN
CU	CONDENSING UNIT	HB	HOSE BIBB
FE	FIRE EXTINGUISHER	POS	POINT OF SALE
FD	FLOOR DRAIN	WH	WATER HEATER

GENERAL NOTES

A. ALL FURNITURE IS BY OWNER

B. HOTEL ROOM TYPE MATRIX, C4/A114

C. INTERIOR PARTITION TYPES TO BE TYPE "A", U.N.O - SEE A1/A851

D. TOP OF PARTITION DETAILS, SEE A1/A861

E. FIRE EXTINGUISHER DETAILS, SEE A4/A871

F. REFER TO SHEETS G104 - G107 FOR ADA REQUIRED DIMENSIONS

G. TYP DOOR HINGE INSTALL DIMENSION @ PERPENDICULAR WALLS, E6/A871

H. DOOR SCHEDULES ON SHEETS A801 & A802

I. METAL STUD WALL FRAMING ADDITIONAL DETAILS ON SHEETS A871 & A872

J. UL PENETRATIONS & UL ASSEMBLIES: SEE SHEETS A881 - A885

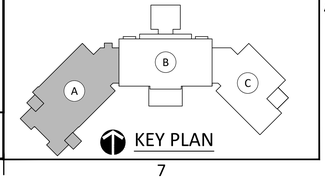

A2	FLOOR PLAN: LEVEL 300 - "PLAN A"
A103A	1/8" = 1'-0"

PROJECT NORTH

KUO DIEDRICH CHI
730 PEACHTREE STREET, NE
STUDIO 325
ATLANTA, GEORGIA 30308
678.244.6270
www.KDCarchitects.com

ARCHITECT:

ARCH. REG: AR91344

CONSULTANT:

REVISIONS

DATE:	DESCRIPTION:
10/18/24	SCHEMATIC DESIGN
6/5/25	DESIGN DEVELOPMENT
10/23/25	50% CONSTRUCTION DOCS
11/14/25	PERMIT SET

PROJECT:

SERENITY SEASIDE RESORT

BUILDING #1

THE INN

186 SOUTH BAY SHORE DRIVE, EASTPOINT, FL 32328

Serenity Seaside Operations, LLC
174 Watercolor Way, PMB 410
Santa Rosa Beach, Florida 32459

JOB NUMBER: 23019.1

DATE: --/--/----

TITLE: FLOOR PLAN: LEVEL 300 - "PLAN A"

SHEET: A103A

K:\Projects\23\23019\DWGs\Serenity_Bldg-1_Inn\Sheets\23019.1-A103A.dwg Plotted: Nov 13, 2025 - 6:10pm by ColebLawrence

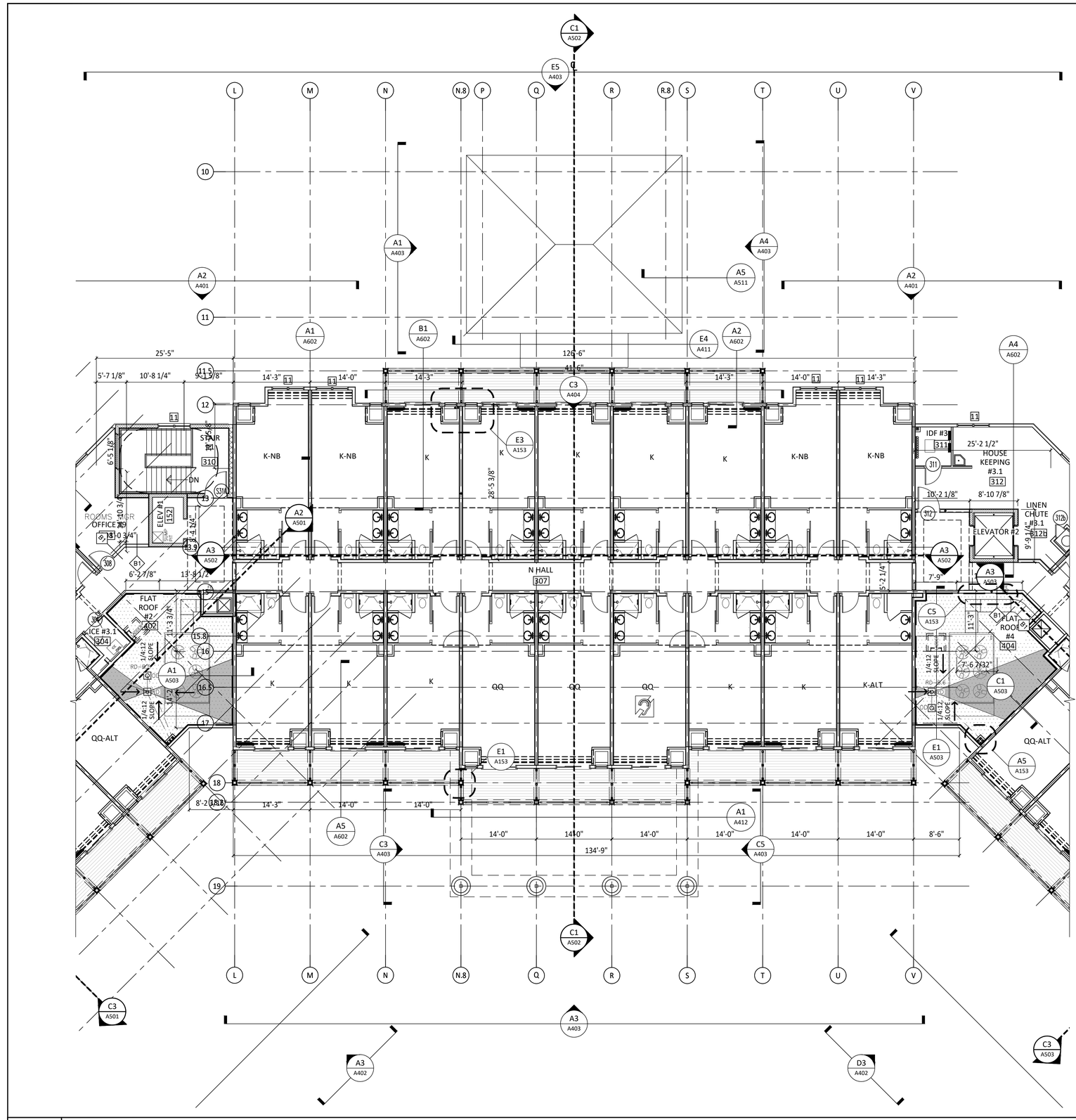

A2	FLOOR PLAN: LEVEL 300 - "PLAN B"
A103B	1/8" = 1'-0"

PROJECT NORTH

SHEET NOTES / LEGEND

1. ALL WALLS ARE TYPE "A" UNLESS NOTED OTHERWISE

LEGEND

101	DOOR / CASED OPENING	#	WINDOW TAG
A#	WALL PARTITION TAG	L#	LOUVER TAG
101	ROOM NUMBER TAG	SLOPE	DIRECTION OF SLOPEDFLOOR

AD	AREA DRAIN	EF	EXHAUST FAN
CU	CONDENSING UNIT	HB	HOSE BIBB
FE	FIRE EXTINGUISHER	POS	POINT OF SALE
FD	FLOOR DRAIN	WH	WATER HEATER

GENERAL NOTES

A. ALL FURNITURE IS BY OWNER

B. HOTEL ROOM TYPE MATRIX, C4/A114

C. INTERIOR PARTITION TYPES TO BE TYPE "A", U.N.O - SEE A1/A851

D. TOP OF PARTITION DETAILS, SEE A1/A861

E. FIRE EXTINGUISHER DETAILS, SEE A4/A871

F. REFER TO SHEETS G104 - G107 FOR ADA REQUIRED DIMENSIONS

G. TYP DOOR HINGE INSTALL DIMENSION @ PERPENDICULAR WALLS, E6/A871

H. DOOR SCHEDULES ON SHEETS A801 & A802

I. METAL STUD WALL FRAMING ADDITIONAL DETAILS ON SHEETS A871 & A872

J. UL PENETRATIONS & UL ASSEMBLIES: SEE SHEETS A881 - A885

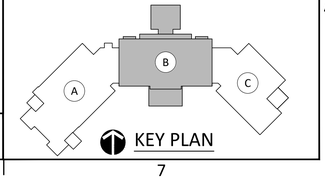

KEY PLAN

KUO DIEDRICH CHI

730 PEACHTREE STREET, NE
STUDIO 325
ATLANTA, GEORGIA 30308
678.244.6270

www.KDCarchitects.com

ARCHITECT:

Mark A Diedrich

Digitally signed by Mark A Diedrich
Date: 2025.11.14 15:38:41 -05'00'

ARCH. REG: AR91344

CONSULTANT:

REVISIONS	
DATE:	DESCRIPTION:
10/18/24	SCHEMATIC DESIGN
6/5/25	DESIGN DEVELOPMENT
10/23/25	50% CONSTRUCTION DOCS
11/14/25	PERMIT SET

PROJECT:

SERENITY SEASIDE RESORT

BUILDING #1

THE INN

186 SOUTH BAY SHORE DRIVE, EASTPOINT, FL 32328

Serenity Seaside Operations, LLC
174 Watercolor Way, PMB 410
Santa Rosa Beach, Florida 32459

JOB NUMBER: 23019.1

DATE: --/--/----

TITLE: FLOOR PLAN: LEVEL 300 - "PLAN B"

SHEET: A103B

K:\Projects\23\23019\DWGs\Serenity_Bldg-1_Inn\Sheets\23019.1-A103B.dwg Plotted: Nov 13, 2025 - 6:10pm by ColebLawrence

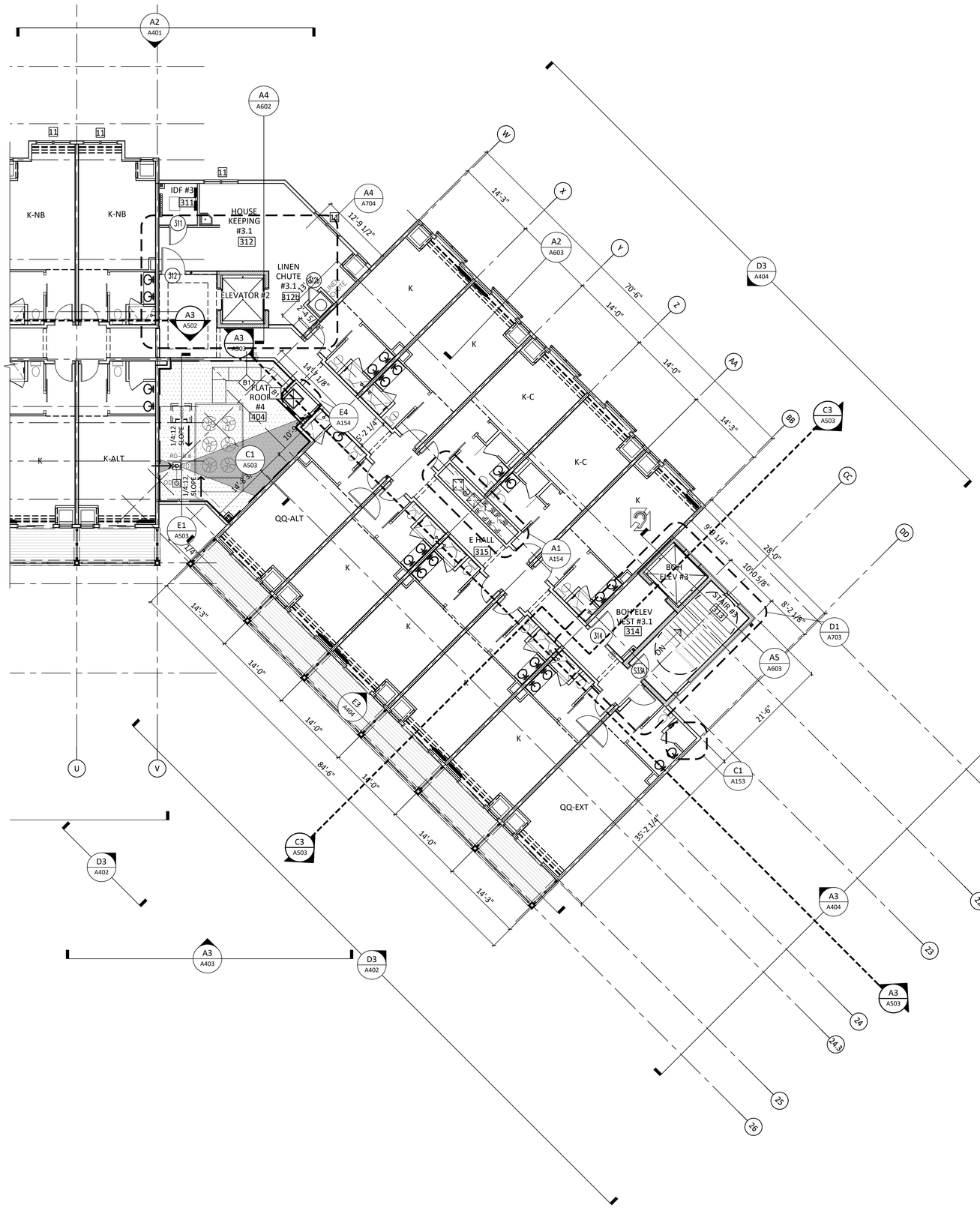

SHEET NOTES / LEGEND

1. ALL WALLS ARE TYPE "A" UNLESS NOTED OTHERWISE

LEGEND

101	DOOR / CASED OPENING	#	WINDOW TAG
A#	WALL PARTITION TAG	L#	LOUVER TAG
101	ROOM NUMBER TAG	← SLOPE	DIRECTION OF SLOPEDFLOOR

AD	AREA DRAIN	EF	EXHAUST FAN
CU	CONDENSING UNIT	HB	HOSE BIBB
FE	FIRE EXTINGUISHER	POS	POINT OF SALE
FD	FLOOR DRAIN	WH	WATER HEATER

GENERAL NOTES

A. ALL FURNITURE IS BY OWNER

B. HOTEL ROOM TYPE MATRIX, C4/A114

C. INTERIOR PARTITION TYPES TO BE TYPE "A", U.N.O - SEE A1/A851

D. TOP OF PARTITION DETAILS, SEE A1/A861

E. FIRE EXTINGUISHER DETAILS, SEE A4/A871

F. REFER TO SHEETS G104 - G107 FOR ADA REQUIRED DIMENSIONS

G. TYP DOOR HINGE INSTALL DIMENSION @ PERPENDICULAR WALLS, E6/A871

H. DOOR SCHEDULES ON SHEETS A801 & A802

I. METAL STUD WALL FRAMING ADDITIONAL DETAILS ON SHEETS A871 & A872

J. UL PENETRATIONS & UL ASSEMBLIES: SEE SHEETS A881 - A885

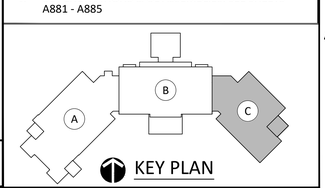

KEY PLAN

A2	FLOOR PLAN: LEVEL 300 - "PLAN C"
A103C	1/8" = 1'-0"

KUO DIEDRICH CHI
730 PEACHTREE STREET, NE
STUDIO 325
ATLANTA, GEORGIA 30308
678.244.6270
www.KDCarchitects.com

ARCHITECT:

Mark A Diedrich

Digitally signed by Mark A Diedrich
Date: 2025.11.14 15:39:11 -05'00'

ARCH. REG: AR91344

CONSULTANT:

REVISIONS	
DATE:	DESCRIPTION:
10/18/24	SCHEMATIC DESIGN
6/5/25	DESIGN DEVELOPMENT
10/23/25	50% CONSTRUCTION DOCS
11/14/25	PERMIT SET

PROJECT:

SERENITY SEASIDE RESORT

BUILDING #1

THE INN

186 SOUTH BAY SHORE DRIVE, EASTPOINT, FL 32328

Serenity Seaside Operations, LLC
174 Watercolor Way, PMB 410
Santa Rosa Beach, Florida 32459

JOB NUMBER: 23019.1

DATE: --/--/----

TITLE: FLOOR PLAN: LEVEL 300 - "PLAN C"

SHEET: A103C

K:\Projects\23\23019\DWGs\Serenity_Bldg-1_Inn\Sheets\23019.1-A103C.dwg Plotted: Nov 13, 2025 - 6:10pm by CoteLawrence

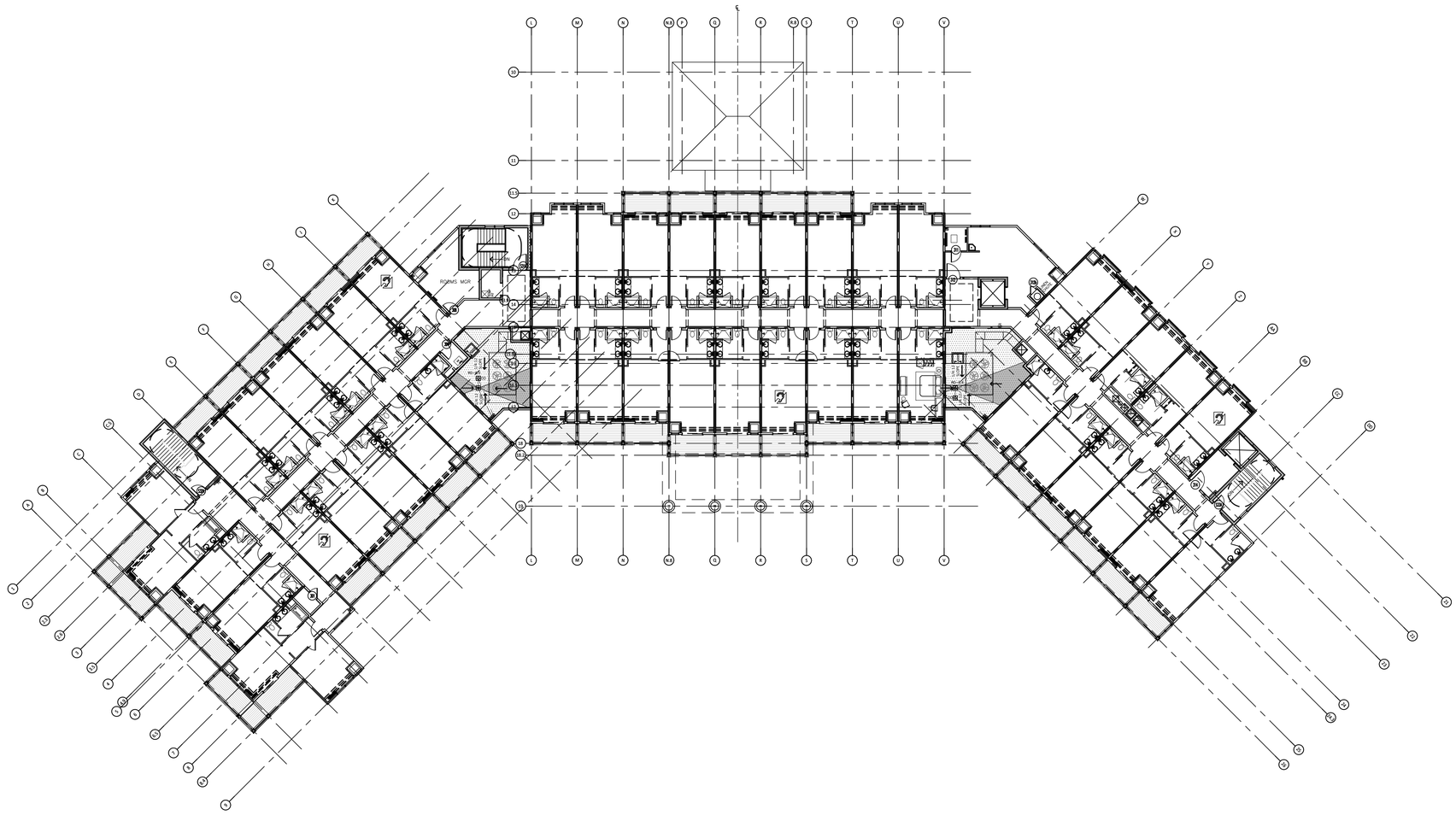

SHEET NOTES / LEGEND

1. -

LEGEND

101	DOOR / CASED OPENING	#	WINDOW TAG
A#	WALL PARTITION TAG	L#	LOUVER TAG
101	ROOM NUMBER TAG	SLOPE	DIRECTION OF SLOPEDFLOOR

AD	AREA DRAIN	EF	EXHAUST FAN
CU	CONDENSING UNIT	HB	HOSE BIBB
FE	FIRE EXTINGUISHER	POS	POINT OF SALE
FD	FLOOR DRAIN	WH	WATER HEATER

GENERAL NOTES

A. ALL FURNITURE IS BY OWNER

B. HOTEL ROOM TYPE MATRIX, C4/A114

C. INTERIOR PARTITION TYPES TO BE TYPE "A", U.N.O - SEE A1/A851

D. TOP OF PARTITION DETAILS, SEE A1/A861

E. FIRE EXTINGUISHER DETAILS, SEE A4/A871

F. REFER TO SHEETS G104 - G107 FOR ADA REQUIRED DIMENSIONS

G. TYP DOOR HINGE INSTALL DIMENSION @ PERPENDICULAR WALLS, E6/A871

H. DOOR SCHEDULES ON SHEETS A801 & A802

I. METAL STUD WALL FRAMING ADDITIONAL DETAILS ON SHEETS A871 & A872

J. UL PENETRATIONS & UL ASSEMBLIES: SEE SHEETS A881 - A885

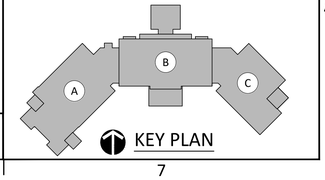

KEY PLAN

KUO DIEDRICH CHI

730 PEACHTREE STREET, NE
STUDIO 325
ATLANTA, GEORGIA 30308
678.244.6270

www.KDCarchitects.com

ARCHITECT:

Mark A Diedrich

Digitally signed by Mark A Diedrich
Date: 2025.11.14 15:37:47 -05'00'

ARCH. REG: AR91344

CONSULTANT:

REVISIONS	
DATE:	DESCRIPTION:
10/18/24	SCHEMATIC DESIGN
6/5/25	DESIGN DEVELOPMENT
10/23/25	50% CONSTRUCTION DOCS
11/14/25	PERMIT SET

PROJECT:

SERENITY SEASIDE RESORT

BUILDING #1

THE INN

186 SOUTH BAY SHORE DRIVE, EASTPOINT, FL 32328

Serenity Seaside Operations, LLC
174 Watercolor Way, PMB 410
Santa Rosa Beach, Florida 32459

JOB NUMBER: 23019.1

DATE: --/--/----

TITLE: FLOOR PLAN: LEVEL 300 - COMPOSITE

SHEET: A103

A1	FLOOR PLAN: LEVEL 300 - COMPOSITE
A103	1/16" = 1'-0"

PROJECT NORTH

K:\Projects\23\23019\DWGs\Serenity_Bldg-1_Inn\Sheets\23019.1-A103.dwg Plotted: Nov 13, 2025 - 6:09pm by ColebLawrence

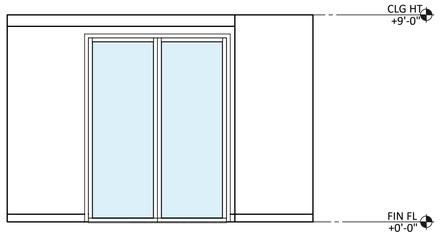

E1	INT ELEV @ NORTH - UNIT "K"
A111	3/8" = 1'-0"

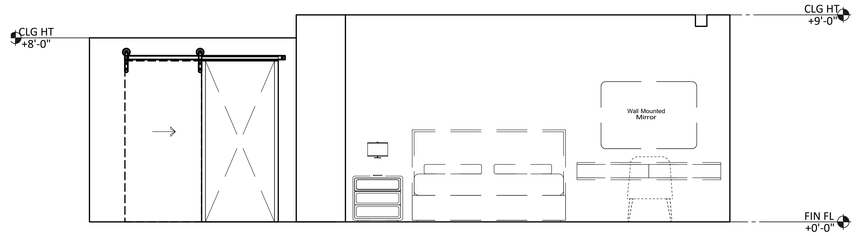

E3	INT ELEV @ WEST - UNIT "K"
A111	3/8" = 1'-0"

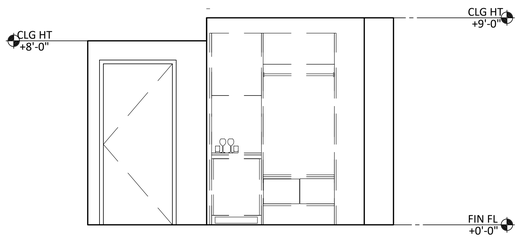

D1	INT ELEV @ SOUTH - UNIT "K"
A111	3/8" = 1'-0"

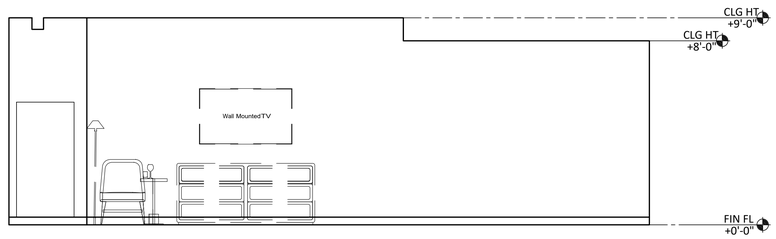

D3	INT ELEV @ EAST - UNIT "K"
A111	3/8" = 1'-0"

GENERAL NOTES

A. ALL FURNITURE IS BY OWNER
B. HOTEL ROOM MATRIX, C4/G114
C. LIFE SAFETY PLANS, SHEETS G111, G112, & G113
D. DIMENSIONS ARE TO FIN FACE OF PARTITION, UNO
E. PROVIDE BLOCKING FOR ALL SHELVING & TOILET ACCESSORIES
F. ALL WALL DEVICES & OUTLETS IN RATED WALLS TO BE LOCATED SO THAT THEY ARE NOT "BACK TO BACK"
G. MOUNTING HEIGHTS, SHEETS G106 & G107
H. DETAILED ELEV @ GUEST RM ENTRY DOOR, B6/A120
I. NOT USED
J. PLANS @ ADA SHOWERS, B3/A120.
K. SECTION @ SHOWER DRAINS, A2 & A5/A120
L. SECTION @ TUB/SHOWER EDGE SUPPORT, D1/A120
M. DEVICE LAYOUT FOR ADA GUEST RM, A1/A120
N. DETAILS @ GUEST RM CLOSETS, E3/A120
O. REFER TO BUILDING PLANS FOR LOCATIONS OF ADA AND HEARING GUESTROOM UNITS

SHEET NOTES / LEGEND

1. ALL WALLS TYPE A U.N.O.
2. SEE COMPOSITE PLANS FOR BALCONY FLOORING MATERIAL & GUARDRAIL LOCATIONS
3. SHOWER CURB, B5/A121
4. BATHROOM EXHAUST DUCT CHASE ON L300 GUESTROOMS ONLY

NOTE:
REFER TO COMPOSITE BLDG PLANS FOR LOCATIONS OF JULIET BALCONIES

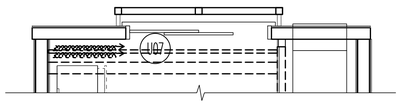

C1	JULIET BALCONY ALTERNATIVE @ UNIT "K"
A111	3/8" = 1'-0"

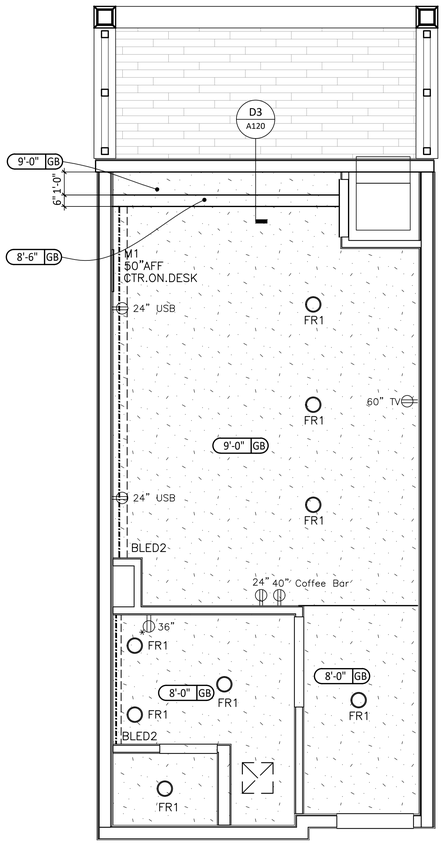

A3	RCP: UNIT "K" (KING)
A111	3/8" = 1'-0"

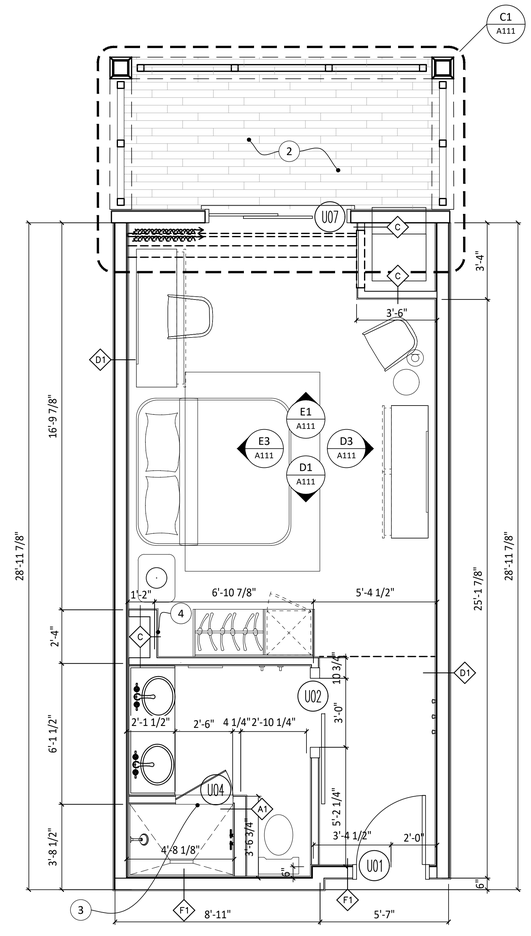

A5	FLOOR PLAN: UNIT "K" (KING)
A111	3/8" = 1'-0"

KUO DIEDRICH CHI
730 PEACHTREE STREET, NE
STUDIO 325
ATLANTA, GEORGIA 30308
678.244.6270
www.KDCarchitects.com

ARCHITECT:
Mark A Diedrich
Digitally signed by Mark A Diedrich
Date: 2025.11.14 15:39:38 -05'00'
ARCH. REG: AR91344

CONSULTANT:

REVISIONS

DATE:	DESCRIPTION:
10/18/24	SCHEMATIC DESIGN
6/5/25	DESIGN DEVELOPMENT
10/23/25	50% CONSTRUCTION DOCS
11/14/25	PERMIT SET

PROJECT:
SERENITY SEASIDE RESORT
BUILDING #1
THE INN
186 SOUTH BAY SHORE DRIVE, EASTPOINT, FL 32328

Serenity Seaside Operations, LLC
174 Watercolor Way, PMB 410
Santa Rosa Beach, Florida 32459

JOB NUMBER: 23019.1
DATE: --/--/----
TITLE: FLOOR PLANS: BEDROOM UNIT "K" (KING)
SHEET: A111

K:\Projects\23\23019\DWGs\Serenity_Bldg-1_Inn\Sheets\23019.1-A111.dwg Plotted: Nov 14, 2025 - 1:58pm by CalebLawrence

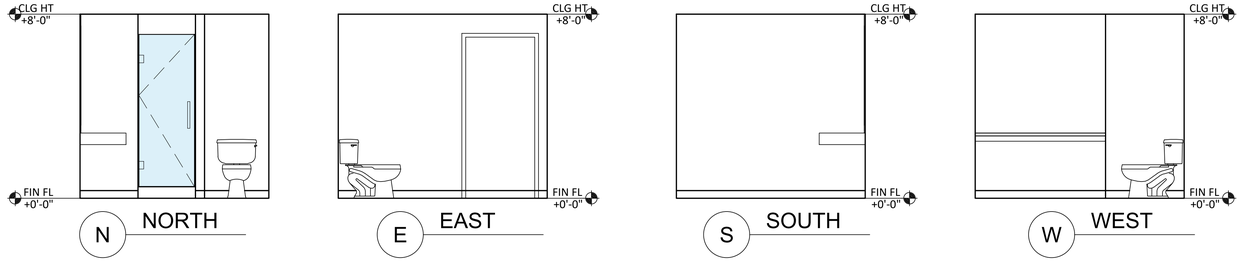

E2 | INT ELEV @ BATHROOM "QQ"

A112 | 3/8" = 1'-0"

GENERAL NOTES

A. ALL FURNITURE IS BY OWNER
B. HOTEL ROOM MATRIX, C4/G114
C. LIFE SAFETY PLANS, SHEETS G111, G112, & G113
D. DIMENSIONS ARE TO FIN FACE OF PARTITION, UNO
E. PROVIDE BLOCKING FOR ALL SHELVING & TOILET ACCESSORIES
F. ALL WALL DEVICES & OUTLETS IN RATED WALLS TO BE LOCATED SO THAT THEY ARE NOT "BACK TO BACK"
G. MOUNTING HEIGHTS, SHEETS G106 & G107
H. DETAILED ELEV @ GUEST RM ENTRY DOOR, B6/A120
I. NOT USED
J. PLANS @ ADA SHOWERS, B3/A120.
K. SECTION @ SHOWER DRAINS, A2 & A5/A120
L. SECTION @ TUB/SHOWER EDGE SUPPORT, D1/A120
M. DEVICE LAYOUT FOR ADA GUEST RM, A1/A120
N. DETAILS @ GUEST RM CLOSETS, E3/A120
O. REFER TO BUILDING PLANS FOR LOCATIONS OF ADA AND HEARING GUESTROOM UNITS

SHEET NOTES / LEGEND

1. ALL WALLS TYPE A U.N.O
2. SEE COMPOSITE FLOOR PLANS FOR LOCATIONS OF ROOMS W/CONNECTING DOORS
3. SEE COMPOSITE PLANS FOR BALCONY FLOORING MATERIAL & GUARDRAIL LOCATIONS
4. SHOWER CURB, B5/A121
5. BATHROOM EXHAUST DUCT CHASE ON L300 GUESTROOMS ONLY

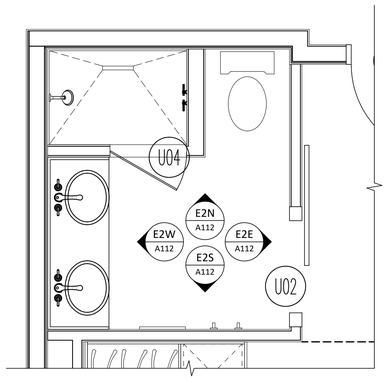

C1 | DETAILED FLOOR PLAN: BATHROOM "QQ"

A112 | 1/2" = 1'-0"

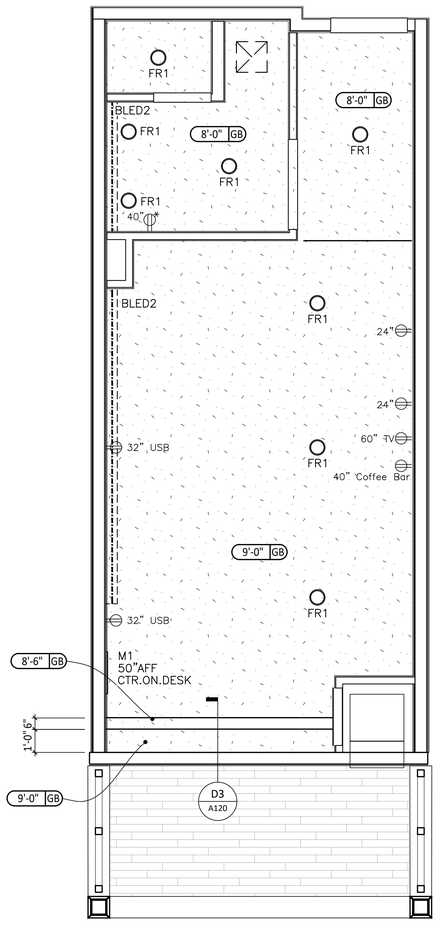

A3 | RCP: UNIT "QQ" (QUEEN/QUEEN)

A112 | 3/8" = 1'-0"

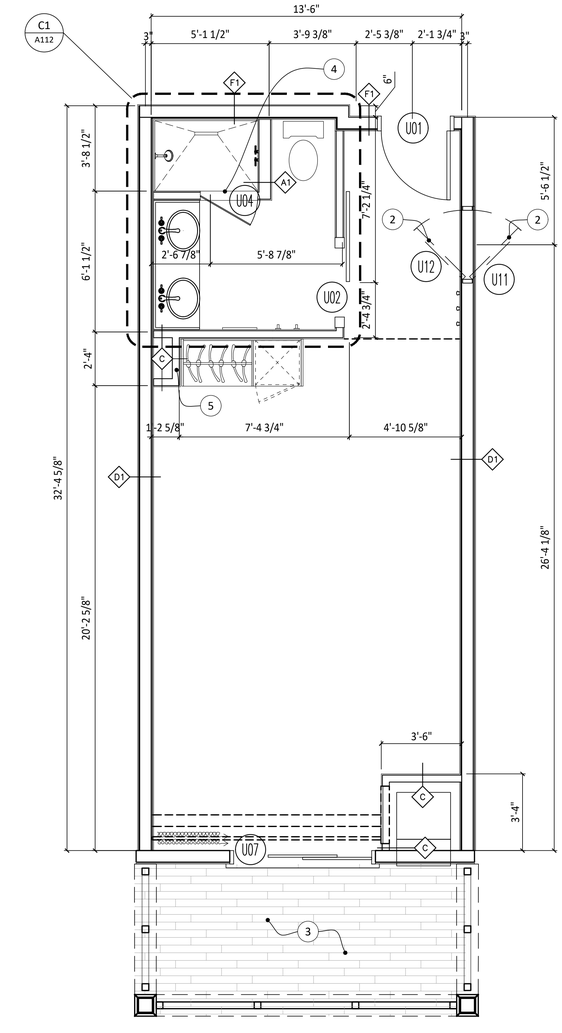

A5 | FLOOR PLAN: UNIT "QQ" (QUEEN/QUEEN)

A112 | 3/8" = 1'-0"

KUO DIEDRICH CHI
730 PEACHTREE STREET, NE
STUDIO 325
ATLANTA, GEORGIA 30308
678.244.6270
www.KDCarchitects.com

ARCHITECT:

Mark A Diedrich

Digitally signed by Mark A Diedrich
Date: 2025.11.14 15:40:11 -05'00'

ARCH. REG: AR91344

CONSULTANT:

REVISIONS	
DATE:	DESCRIPTION:
10/18/24	SCHEMATIC DESIGN
6/5/25	DESIGN DEVELOPMENT
10/23/25	50% CONSTRUCTION DOCS
11/14/25	PERMIT SET

PROJECT:

SERENITY SEASIDE RESORT

BUILDING #1

THE INN

186 SOUTH BAY SHORE DRIVE, EASTPOINT, FL 32328

Serenity Seaside Operations, LLC
174 Watercolor Way, PMB 410
Santa Rosa Beach, Florida 32459

JOB NUMBER: 23019.1

DATE: --/--/----

TITLE: FLOOR PLANS: BEDROOM UNIT "QQ" (QUEEN/QUEEN)

SHEET: A112

K:\Projects\23\23019\DWGs\Serenity_Bldg--1_Inn\Sheets\23019.1-A112.dwg Plotted: Nov 14, 2025 - 1:38pm by CalebLawrence

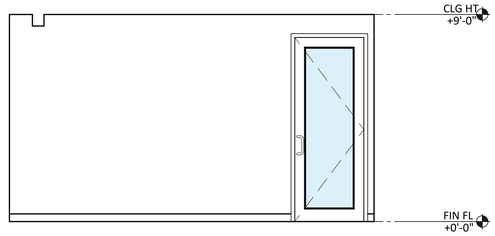

F1	INT ELEV @ NORTH - UNIT "K - XL"
A113	3/8" = 1'-0"

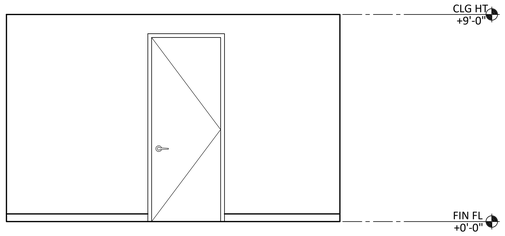

F3	INT ELEV @ EAST - UNIT "K - XL"
A113	3/8" = 1'-0"

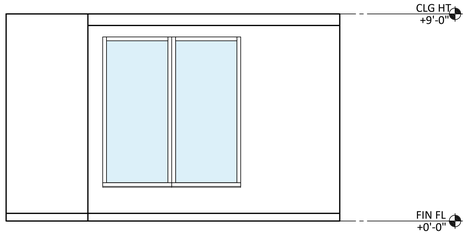

D1	INT ELEV @ WEST - UNIT "K - XL"
A113	3/8" = 1'-0"

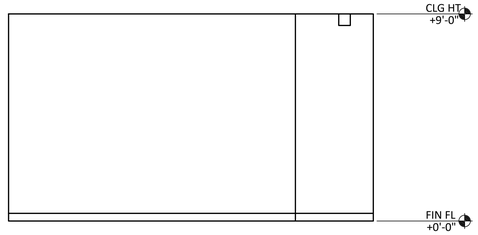

E5	INT ELEV @ SOUTH - UNIT "K - XL"
A113	3/8" = 1'-0"

GENERAL NOTES

A. ALL FURNITURE IS BY OWNER
B. HOTEL ROOM MATRIX, C4/G114
C. LIFE SAFETY PLANS, SHEETS G111, G112, & G113
D. DIMENSIONS ARE TO FIN FACE OF PARTITION, UNO
E. PROVIDE BLOCKING FOR ALL SHELVING & TOILET ACCESSORIES
F. ALL WALL DEVICES & OUTLETS IN RATED WALLS TO BE LOCATED SO THAT THEY ARE NOT "BACK TO BACK"
G. MOUNTING HEIGHTS, SHEETS G106 & G107
H. DETAILED ELEV @ GUEST RM ENTRY DOOR, B6/A120
I. NOT USED
J. PLANS @ ADA SHOWERS, B3/A120.
K. SECTION @ SHOWER DRAINS, A2 & A5/A120
L. SECTION @ TUB/SHOWER EDGE SUPPORT, D1/A120
M. DEVICE LAYOUT FOR ADA GUEST RM, A1/A120
N. DETAILS @ GUEST RM CLOSETS, E3/A120
O. REFER TO BUILDING PLANS FOR LOCATIONS OF ADA AND HEARING GUESTROOM UNITS

SHEET NOTES / LEGEND

1. ALL WALLS TYPE A U.N.O.
2. SEE COMPOSITE PLANS FOR BALCONY FLOORING MATERIAL & GUARDRAIL LOCATIONS
3. BATHROOM EXHAUST DUCT CHASE ON L300 GUESTROOMS ONLY

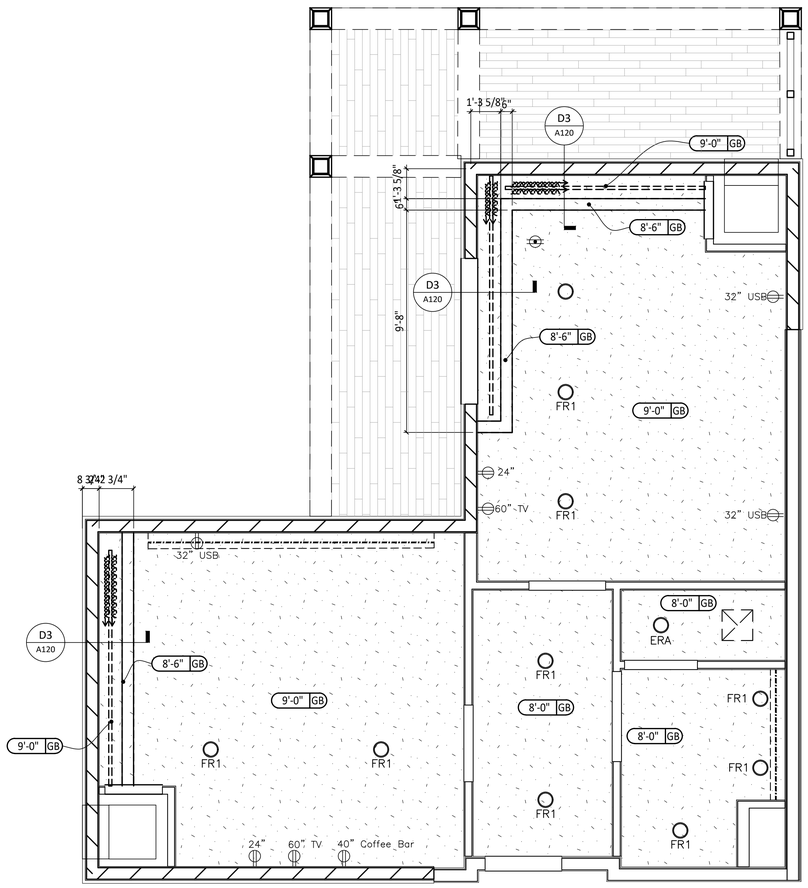

A2	RCP: UNIT "K-XL" (KING - SUITE)
A113	3/8" = 1'-0"

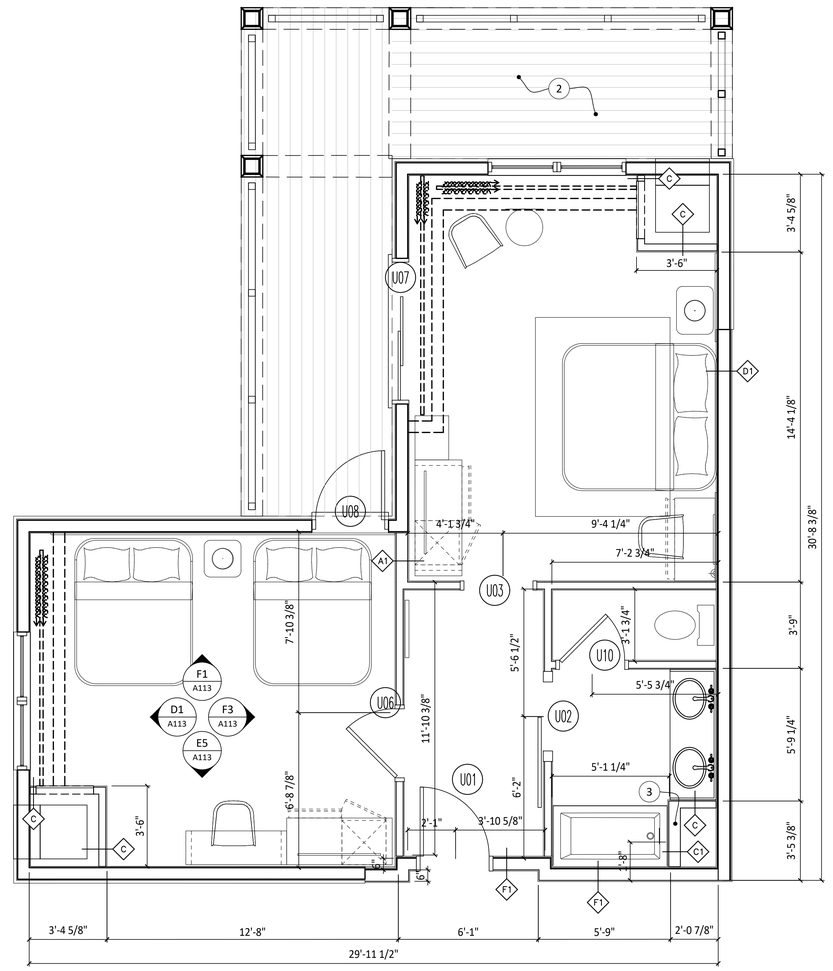

A5	FLOOR PLAN: UNIT "K-XL" (KING - SUITE)
A113	3/8" = 1'-0"

KUO DIEDRICH CHI
730 PEACHTREE STREET, NE
STUDIO 325
ATLANTA, GEORGIA 30308
678.244.6270
www.KDCarchitects.com

ARCHITECT:
Mark A Diedrich
Digitally signed by Mark A Diedrich
Date: 2025.11.14 15:40:42 -05'00'
ARCH. REG: AR91344

CONSULTANT:

REVISIONS

DATE:	DESCRIPTION:
10/18/24	SCHEMATIC DESIGN
6/5/25	DESIGN DEVELOPMENT
10/23/25	50% CONSTRUCTION DOCS
11/14/25	PERMIT SET

PROJECT:
SERENITY SEASIDE RESORT

BUILDING #1

THE INN

186 SOUTH BAY SHORE DRIVE, EASTPOINT, FL 32328

Serenity Seaside Operations, LLC
174 Watercolor Way, PMB 410
Santa Rosa Beach, Florida 32459

JOB NUMBER: 23019.1

DATE: --/--/----

TITLE:
FLOOR PLANS: BEDROOM UNIT "K-XL" (KING - SUITE)

SHEET:
A113

K:\Projects\23\23019\DWGs\Serenity_Bldg-1_Inn\Sheets\23019.1-A113.dwg Plotted: Nov 14, 2025 - 1:58pm by ColebLawrence

GENERAL NOTES

A. ALL FURNITURE IS BY OWNER
B. HOTEL ROOM MATRIX, C4/G114
C. LIFE SAFETY PLANS, SHEETS G111, G112, & G113
D. DIMENSIONS ARE TO FIN FACE OF PARTITION, UNO
E. PROVIDE BLOCKING FOR ALL SHELVING & TOILET ACCESSORIES
F. ALL WALL DEVICES & OUTLETS IN RATED WALLS TO BE LOCATED SO THAT THEY ARE NOT "BACK TO BACK"
G. MOUNTING HEIGHTS, SHEETS G106 & G107
H. DETAILED ELEV @ GUEST RM ENTRY DOOR, B6/A120
I. NOT USED
J. PLANS @ ADA SHOWERS, B3/A120.
K. SECTION @ SHOWER DRAINS, A2 & A5/A120
L. SECTION @ TUB/SHOWER EDGE SUPPORT, D1/A120
M. DEVICE LAYOUT FOR ADA GUEST RM, A1/A120
N. DETAILS @ GUEST RM CLOSETS, E3/A120
O. REFER TO BUILDING PLANS FOR LOCATIONS OF ADA AND HEARING GUESTROOM UNITS

SHEET NOTES / LEGEND

1. ALL WALLS TYPE A U.N.O.
2. SHOWER CURB, B5/A121
3. BATHROOM EXHAUST DUCT CHASE ON L300 GUESTROOMS ONLY

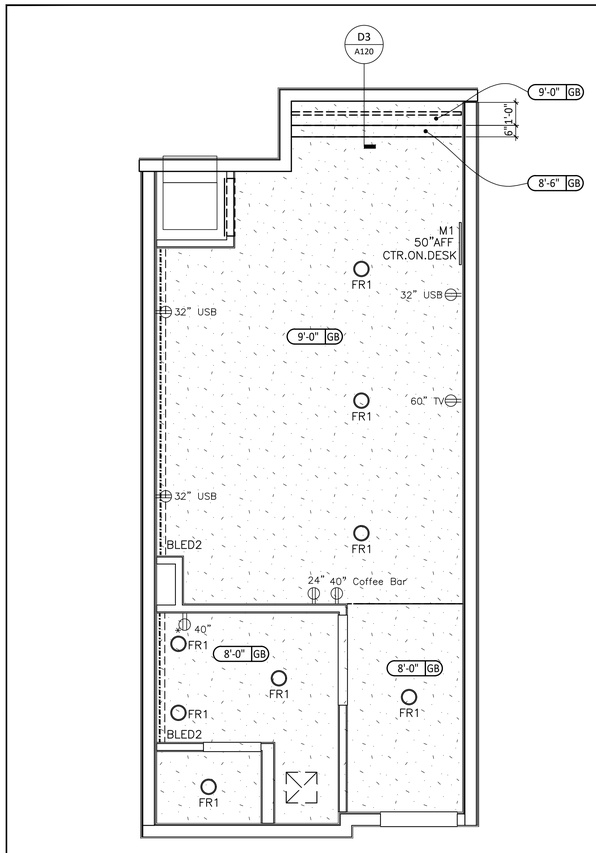

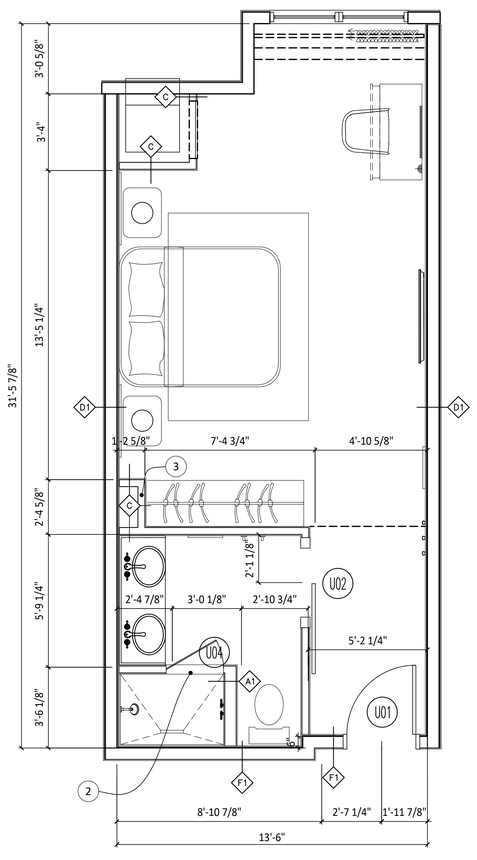

A3 | RCP: UNIT "K-NB" (KING - NO BALCONY) | A114 | 3/8" = 1'-0"

A5 | FLOOR PLAN: UNIT "K-NB" (KING - NO BALCONY) | A114 | 3/8" = 1'-0"

KUO DIEDRICH CHI
730 PEACHTREE STREET, NE
STUDIO 325
ATLANTA, GEORGIA 30308
678.244.6270
www.KDCarchitects.com

ARCHITECT:

Mark A Diedrich

Digitally signed by Mark A Diedrich
Date: 2025.11.14 15:41:13 -05'00'

ARCH. REG: AR91344

CONSULTANT:

REVISIONS	
DATE:	DESCRIPTION:
10/18/24	SCHEMATIC DESIGN
6/5/25	DESIGN DEVELOPMENT
10/23/25	50% CONSTRUCTION DOCS
11/14/25	PERMIT SET

PROJECT:

SERENITY SEASIDE RESORT

BUILDING #1

THE INN

186 SOUTH BAY SHORE DRIVE, EASTPOINT, FL 32328

Serenity Seaside Operations, LLC
174 Watercolor Way, PMB 410
Santa Rosa Beach, Florida 32459

JOB NUMBER: 23019.1

DATE: --/--/----

TITLE: FLOOR PLANS: BEDROOM UNIT "K-NB" (KING - NO BALCONY)

SHEET: A114

K:\Projects\23\23019\DWGs\Serenity_Bldg-1_Inn\Sheets\23019.1-A114.dwg Plotted: Nov 14, 2025 - 1:38pm by CalebLawrence

GENERAL NOTES

A. ALL FURNITURE IS BY OWNER
B. HOTEL ROOM MATRIX, C4/G114
C. LIFE SAFETY PLANS, SHEETS G111, G112, & G113
D. DIMENSIONS ARE TO FIN FACE OF PARTITION, UNO
E. PROVIDE BLOCKING FOR ALL SHELVING & TOILET ACCESSORIES
F. ALL WALL DEVICES & OUTLETS IN RATED WALLS TO BE LOCATED SO THAT THEY ARE NOT "BACK TO BACK"
G. MOUNTING HEIGHTS, SHEETS G106 & G107
H. DETAILED ELEV @ GUEST RM ENTRY DOOR, B6/A120
I. NOT USED
J. PLANS @ ADA SHOWERS, B3/A120.
K. SECTION @ SHOWER DRAINS, A2 & A5/A120
L. SECTION @ TUB/SHOWER EDGE SUPPORT, D1/A120
M. DEVICE LAYOUT FOR ADA GUEST RM, A1/A120
N. DETAILS @ GUEST RM CLOSETS, E3/A120
O. REFER TO BUILDING PLANS FOR LOCATIONS OF ADA AND HEARING GUESTROOM UNITS

SHEET NOTES / LEGEND

1. ALL WALLS TYPE A U.N.O.
2. SEE COMPOSITE PLANS FOR BALCONY FLOORING MATERIAL & GUARDRAIL LOCATIONS
3. SHOWER CURB, B5/A121
4. BATHROOM EXHAUST DUCT CHASE ON L300 GUESTROOMS ONLY

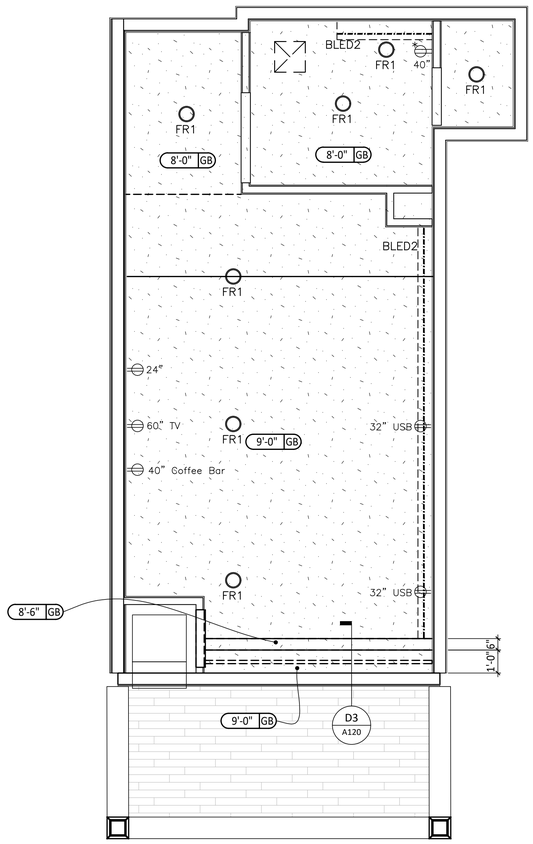

A3 RCP: UNIT "QQ-ALT" (QUEEN/QUEEN - ALTERNATE)
A115 3/8" = 1'-0"

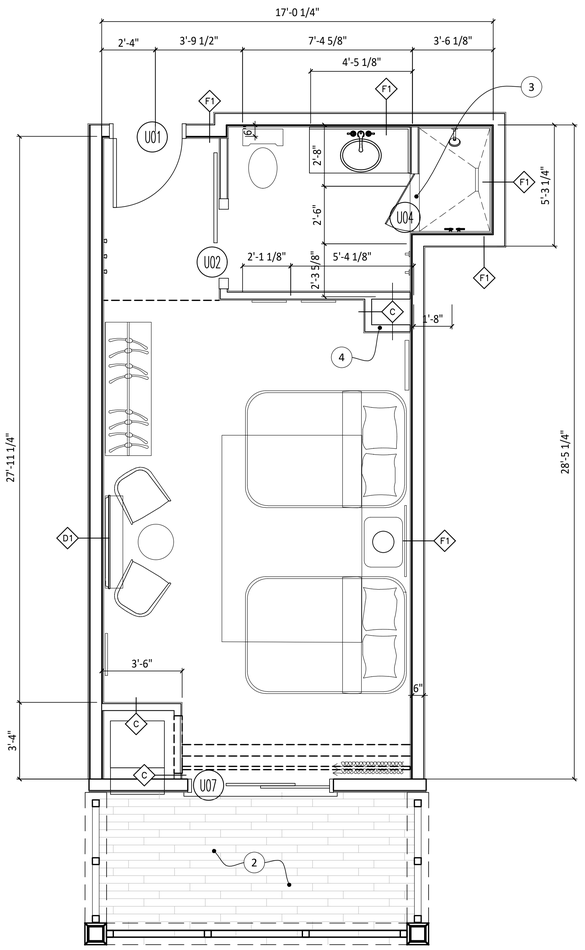

A5 FLOOR PLAN: UNIT "QQ-ALT" (QUEEN/QUEEN - ALTERNATE)
A115 3/8" = 1'-0"

KUO DIEDRICH CHI
730 PEACHTREE STREET, NE
STUDIO 325
ATLANTA, GEORGIA 30308
678.244.6270
www.KDCarchitects.com

ARCHITECT:
Mark A Diedrich
Digitally signed by Mark A Diedrich
Date: 2025.11.14 15:41:45 -05'00'
ARCH. REG: AR91344

CONSULTANT:

REVISIONS

DATE:	DESCRIPTION:
10/18/24	SCHEMATIC DESIGN
6/5/25	DESIGN DEVELOPMENT
10/23/25	50% CONSTRUCTION DOCS
11/14/25	PERMIT SET

PROJECT:
SERENITY SEASIDE RESORT
BUILDING #1
THE INN
186 SOUTH BAY SHORE DRIVE, EASTPOINT, FL 32328

Serenity Seaside Operations, LLC
174 Watercolor Way, PMB 410
Santa Rosa Beach, Florida 32459

JOB NUMBER: 23019.1
DATE: --/--/----
TITLE: FLOOR PLANS: BEDROOM UNIT "QQ-ALT" (QUEEN/QUEEN - ALTERNATE)
SHEET: A115

K:\Projects\23\23019\DWGs\Serenity_Bldg-1_Inn\Sheets\23019.1-A115.dwg Plotted: Nov 14, 2025 – 1:58pm by ColebLawrence

GENERAL NOTES

A. ALL FURNITURE IS BY OWNER
B. HOTEL ROOM MATRIX, C4/G114
C. LIFE SAFETY PLANS, SHEETS G111, G112, & G113
D. DIMENSIONS ARE TO FIN FACE OF PARTITION, UNO
E. PROVIDE BLOCKING FOR ALL SHELVING & TOILET ACCESSORIES
F. ALL WALL DEVICES & OUTLETS IN RATED WALLS TO BE LOCATED SO THAT THEY ARE NOT "BACK TO BACK"
G. MOUNTING HEIGHTS, SHEETS G106 & G107
H. DETAILED ELEV @ GUEST RM ENTRY DOOR, B6/A120
I. NOT USED
J. PLANS @ ADA SHOWERS, B3/A120.
K. SECTION @ SHOWER DRAINS, A2 & A5/A120
L. SECTION @ TUB/SHOWER EDGE SUPPORT, D1/A120
M. DEVICE LAYOUT FOR ADA GUEST RM, A1/A120
N. DETAILS @ GUEST RM CLOSETS, E3/A120
O. REFER TO BUILDING PLANS FOR LOCATIONS OF ADA AND HEARING GUESTROOM UNITS

SHEET NOTES / LEGEND

1. ALL WALLS TYPE A U.N.O
2. SEE COMPOSITE FLOOR PLANS FOR LOCATIONS OF ROOMS W/CONNECTING DOORS
3. SEE COMPOSITE PLANS FOR BALCONY FLOORING MATERIAL & GUARDRAIL LOCATIONS
4. SHOWER CURB, B5/A121
5. BATHROOM EXHAUST DUCT CHASE ON L300 GUESTROOMS ONLY

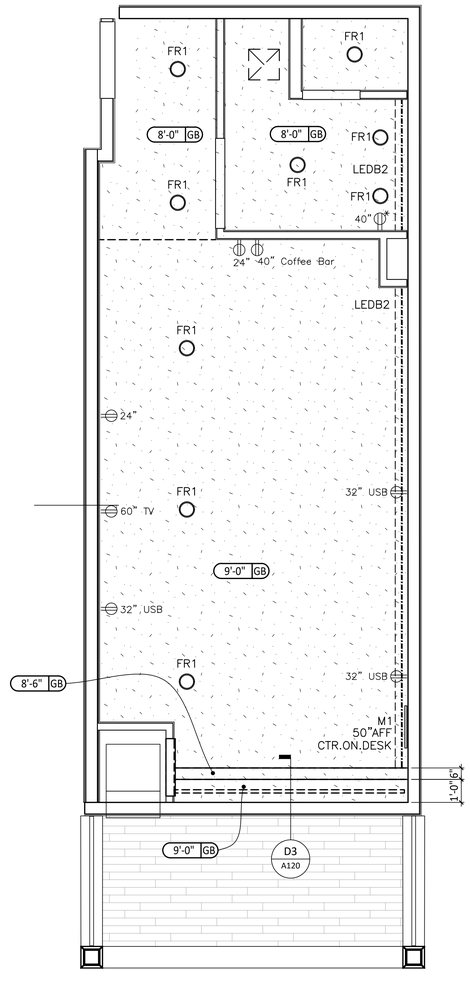

A3 | RCP: UNIT "QQ-EXT" (QUEENQUEEN - EXTENDED)
A116 | 3/8" = 1'-0"

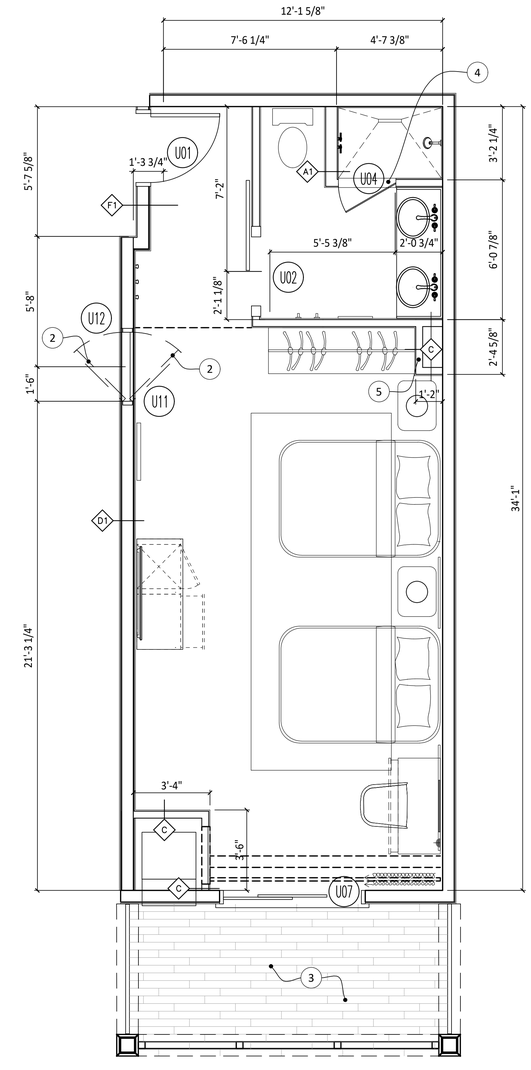

A5 | FLOOR PLAN: UNIT "QQ-EXT" (QUEENQUEEN - EXTENDED)
A116 | 3/8" = 1'-0"

KUO DIEDRICH CHI
730 PEACHTREE STREET, NE
STUDIO 325
ATLANTA, GEORGIA 30308
678.244.6270
www.KDCarchitects.com

ARCHITECT:
Mark A Diedrich
Digitally signed by Mark A Diedrich
Date: 2025.11.14 15:42:20 -05'00'
ARCH. REG: AR91344

CONSULTANT:

REVISIONS

DATE:	DESCRIPTION:
10/18/24	SCHEMATIC DESIGN
6/5/25	DESIGN DEVELOPMENT
10/23/25	50% CONSTRUCTION DOCS
11/14/25	PERMIT SET

PROJECT:
SERENITY SEASIDE RESORT
BUILDING #1
THE INN
186 SOUTH BAY SHORE DRIVE, EASTPOINT, FL 32328

Serenity Seaside Operations, LLC
174 Watercolor Way, PMB 410
Santa Rosa Beach, Florida 32459

JOB NUMBER: 23019.1
DATE: --/--/----

TITLE:
FLOOR PLANS: BEDROOM UNIT "QQ-EXT" (QUEEN/QUEEN - EXTENDED)

SHEET:
A116

K:\Projects\23\23019\DWGs\Serenity_Bldg-1_Inn\Sheets\23019.1-A116.dwg Plotted: Nov 14, 2025 - 1:58pm by ColebLawrence

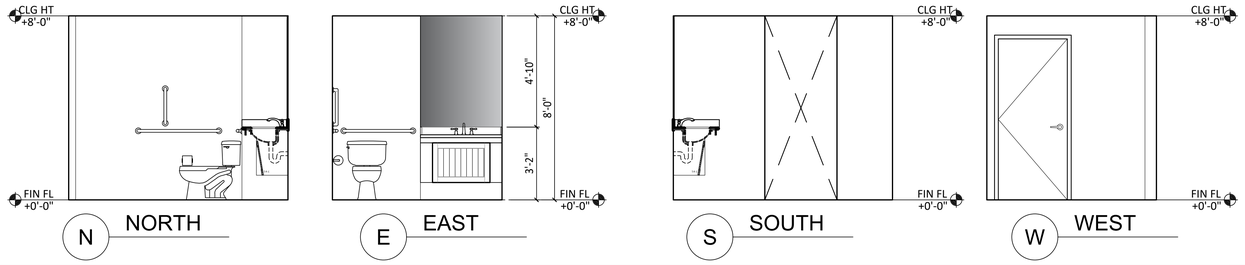

E2 | INT ELEV @ BATHROOM - UNIT K-ADA

A117 | 3/8" = 1'-0"

GENERAL NOTES

A. ALL FURNITURE IS BY OWNER
B. HOTEL ROOM MATRIX, C4/G114
C. LIFE SAFETY PLANS, SHEETS G111, G112, & G113
D. DIMENSIONS ARE TO FIN FACE OF PARTITION, UNO
E. PROVIDE BLOCKING FOR ALL SHELVING & TOILET ACCESSORIES
F. ALL WALL DEVICES & OUTLETS IN RATED WALLS TO BE LOCATED SO THAT THEY ARE NOT "BACK TO BACK"
G. MOUNTING HEIGHTS, SHEETS G106 & G107
H. DETAILED ELEV @ GUEST RM ENTRY DOOR, B6/A120
I. NOT USED
J. PLANS @ ADA SHOWERS, B3/A120.
K. SECTION @ SHOWER DRAINS, A2 & A5/A120
L. SECTION @ TUB/SHOWER EDGE SUPPORT, D1/A120
M. DEVICE LAYOUT FOR ADA GUEST RM, A1/A120
N. DETAILS @ GUEST RM CLOSETS, E3/A120
O. REFER TO BUILDING PLANS FOR LOCATIONS OF ADA AND HEARING GUESTROOM UNITS

SHEET NOTES / LEGEND

1. ALL WALLS TYPE A U.N.O.
2. SEE COMPOSITE PLANS FOR BALCONY FLOORING MATERIAL & GUARDRAIL LOCATIONS
3. BATHROOM EXHAUST DUCT CHASE ON L300 GUESTROOMS ONLY

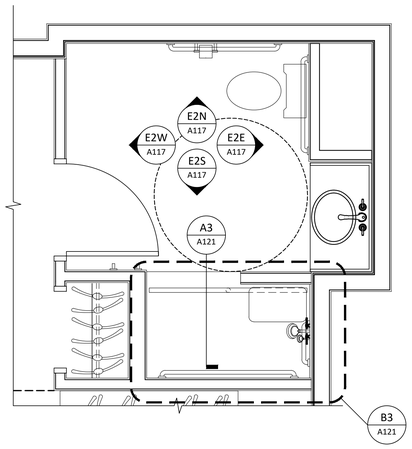

C1 | DETAILED FLOOR PLAN: BATHROOM "K-ADA-H"

A117 | 1/2" = 1'-0"

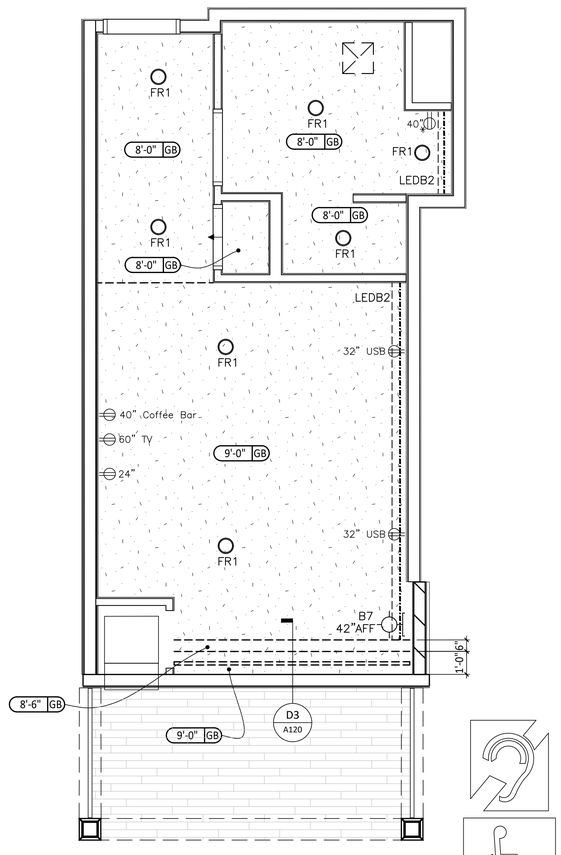

A3 | RCP: UNIT "K-ADA-H" (KING - ACCESSIBLE - HEARING)

A117 | 3/8" = 1'-0"

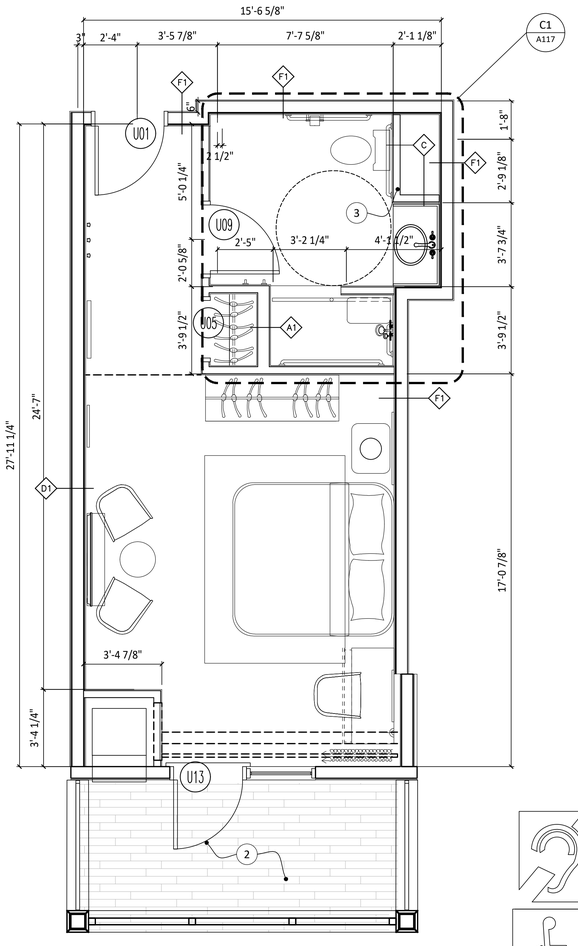

A5 | FLOOR PLAN: UNIT "K-ADA-H" (KING - ACCESSIBLE - HEARING)

A117 | 3/8" = 1'-0"

KUO DIEDRICH CHI
730 PEACHTREE STREET, NE
STUDIO 325
ATLANTA, GEORGIA 30308
678.244.6270
www.KDCarchitects.com

ARCHITECT:
Mark A Diedrich
Digitally signed by Mark A Diedrich
Date: 2025.11.14 15:43:02 -05'00'
ARCH. REG: AR91344

CONSULTANT:

REVISIONS	
DATE:	DESCRIPTION:
10/18/24	SCHEMATIC DESIGN
6/5/25	DESIGN DEVELOPMENT
10/23/25	50% CONSTRUCTION DOCS
11/14/25	PERMIT SET

PROJECT:
SERENITY SEASIDE RESORT
BUILDING #1
THE INN
186 SOUTH BAY SHORE DRIVE, EASTPOINT, FL 32328

Serenity Seaside Operations, LLC
174 Watercolor Way, PMB 410
Santa Rosa Beach, Florida 32459

JOB NUMBER: 23019.1

DATE: --/--/----

TITLE: FLOOR PLANS: BEDROOM UNIT "K-ADA-H" (KING - ACCESSIBLE - HEARING)

SHEET: A117

K:\Projects\23\23019\DWGs\Serenity_Bldg-1_Inn\Sheets\23019.1-A117.dwg Plotted: Nov 14, 2025 - 1:58pm by CalebLawrence

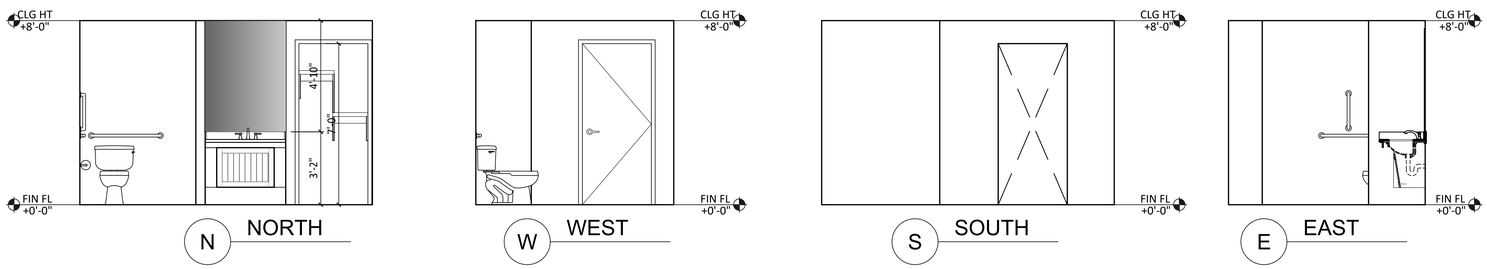

D1 | INT ELEV @ BATHROOM - UNIT QQ ADA

A118 | 3/8" = 1'-0"

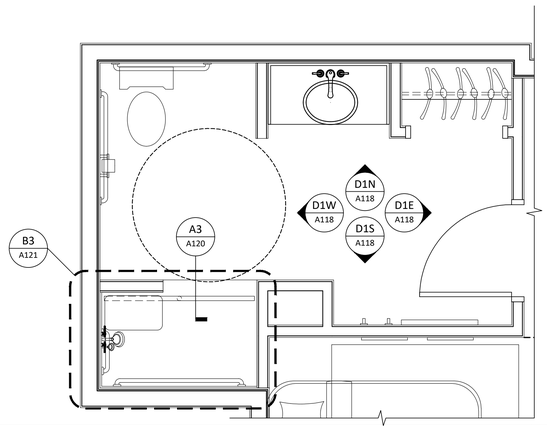

C1 | DETAILED FLOOR PLAN: BATHROOM "QQ"

A118 | 1/2" = 1'-0"

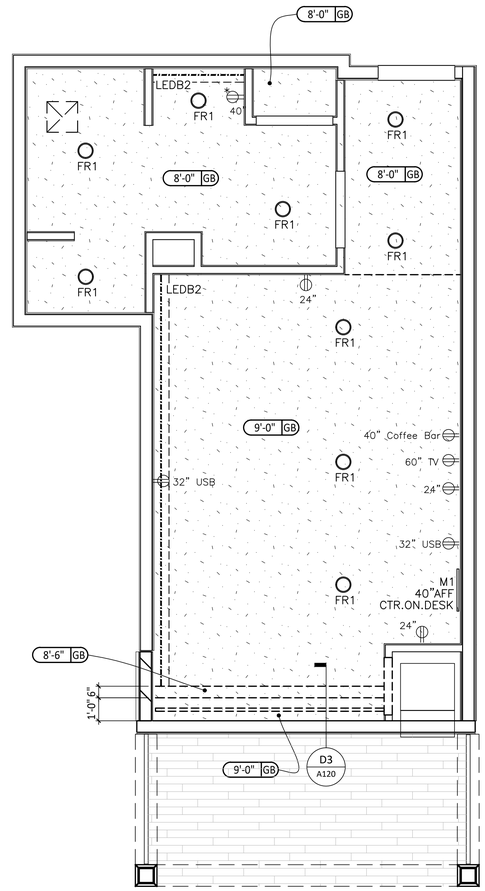

A4 | RCP: UNIT "QQ-ADA" (QUEENS/QUEEN - ACCESSIBLE)

A118 | 3/8" = 1'-0"

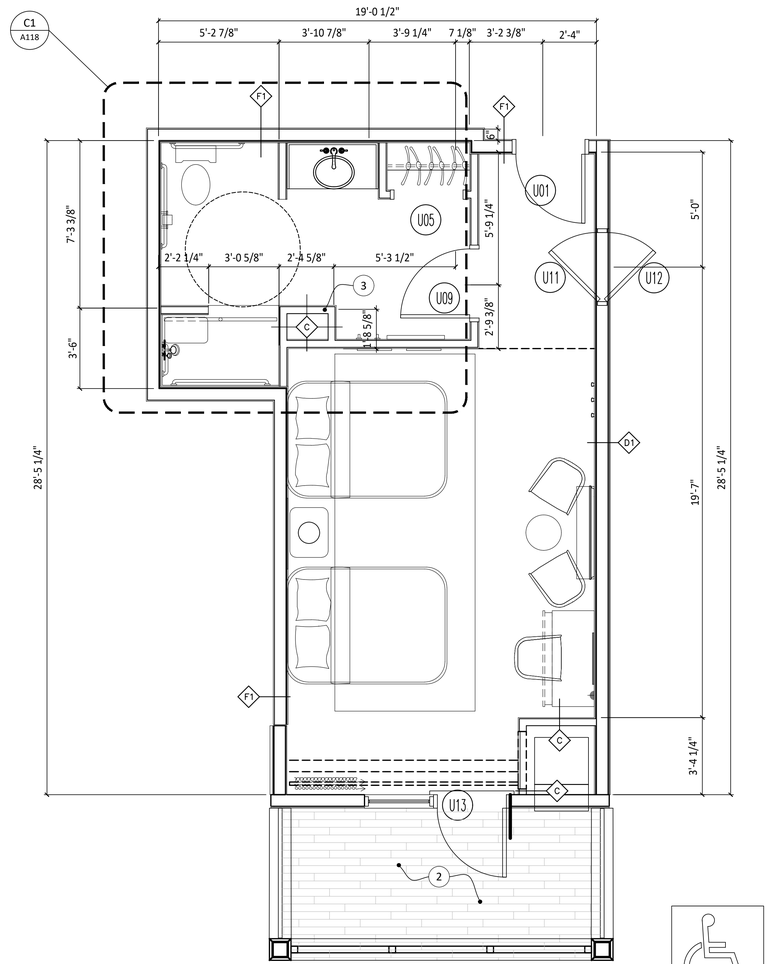

A5 | FLOOR PLAN: UNIT "QQ-ADA" (QUEENS/QUEEN - ACCESSIBLE)

A118 | 3/8" = 1'-0"

GENERAL NOTES

A. ALL FURNITURE IS BY OWNER
B. HOTEL ROOM MATRIX, C4/G114
C. LIFE SAFETY PLANS, SHEETS G111, G112, & G113
D. DIMENSIONS ARE TO FIN FACE OF PARTITION, UNO
E. PROVIDE BLOCKING FOR ALL SHELVING & TOILET ACCESSORIES
F. ALL WALL DEVICES & OUTLETS IN RATED WALLS TO BE LOCATED SO THAT THEY ARE NOT "BACK TO BACK"
G. MOUNTING HEIGHTS, SHEETS G106 & G107
H. DETAILED ELEV @ GUEST RM ENTRY DOOR, B6/A120
I. NOT USED
J. PLANS @ ADA SHOWERS, B3/A120.
K. SECTION @ SHOWER DRAINS, A2 & A5/A120
L. SECTION @ TUB/SHOWER EDGE SUPPORT, D1/A120
M. DEVICE LAYOUT FOR ADA GUEST RM, A1/A120
N. DETAILS @ GUEST RM CLOSETS, E3/A120
O. REFER TO BUILDING PLANS FOR LOCATIONS OF ADA AND HEARING GUESTROOM UNITS

SHEET NOTES / LEGEND

1. ALL WALLS TYPE A U.N.O.
2. SEE COMPOSITE PLANS FOR BALCONY FLOORING MATERIAL & GUARDRAIL LOCATIONS
3. BATHROOM EXHAUST DUCT CHASE ON L300 GUESTROOMS ONLY

KUO DIEDRICH CHI
730 PEACHTREE STREET, NE
STUDIO 325
ATLANTA, GEORGIA 30308
678.244.6270
www.KDCarchitects.com

ARCHITECT:
Mark A Diedrich
Digitally signed by Mark A Diedrich
Date: 2025.11.14 15:43:34 -05'00'
ARCH. REG: AR91344

CONSULTANT:

REVISIONS

DATE:	DESCRIPTION:
10/18/24	SCHEMATIC DESIGN
6/5/25	DESIGN DEVELOPMENT
10/23/25	50% CONSTRUCTION DOCS
11/14/25	PERMIT SET

PROJECT:
SERENITY SEASIDE RESORT
BUILDING #1
THE INN
186 SOUTH BAY SHORE DRIVE, EASTPOINT, FL 32328

Serenity Seaside Operations, LLC
174 Watercolor Way, PMB 410
Santa Rosa Beach, Florida 32459

JOB NUMBER: 23019.1

DATE: --/--/----

TITLE: FLOOR PLANS: BEDROOM UNIT "QQ-ADA" (QUEEN/QUEEN - ACCESSIBLE)

SHEET: A118

K:\Projects\23\23019\DWGs\Serenity_Bldg-1_Inn\Sheets\23019.1-A118.dwg Plotted: Nov 14, 2025 - 1:59pm by CalebLawrence

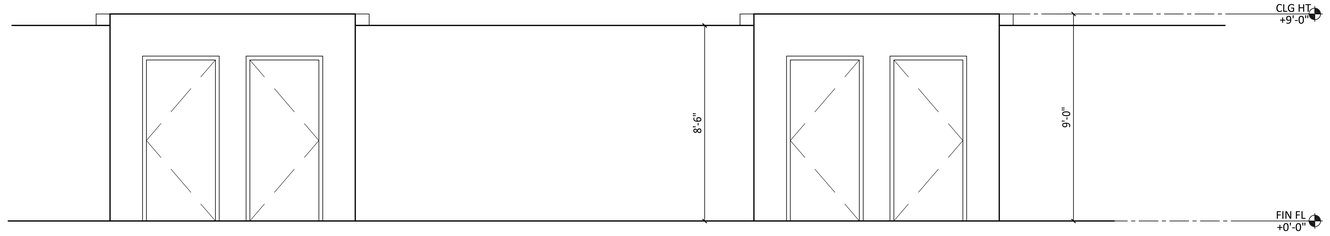

D1 | INT ELEV @ GUEST RM CORRIDOR (TYP)

A119 | 3/8" = 1'-0"

GENERAL NOTES

A. ALL FURNITURE IS BY OWNER
B. HOTEL ROOM MATRIX, C4/G114
C. LIFE SAFETY PLANS, SHEETS G111, G112, & G113
D. DIMENSIONS ARE TO FIN FACE OF PARTITION, UNO
E. PROVIDE BLOCKING FOR ALL SHELVING & TOILET ACCESSORIES
F. ALL WALL DEVICES & OUTLETS IN RATED WALLS TO BE LOCATED SO THAT THEY ARE NOT "BACK TO BACK"
G. MOUNTING HEIGHTS, SHEETS G106 & G107
H. DETAILED ELEV @ GUEST RM ENTRY DOOR, B6/A120
I. NOT USED
J. PLANS @ ADA SHOWERS, B3/A120.
K. SECTION @ SHOWER DRAINS, A2 & A5/A120
L. SECTION @ TUB/SHOWER EDGE SUPPORT, D1/A120
M. DEVICE LAYOUT FOR ADA GUEST RM, A1/A120
N. DETAILS @ GUEST RM CLOSETS, E3/A120
O. REFER TO BUILDING PLANS FOR LOCATIONS OF ADA AND HEARING GUESTROOM UNITS

SHEET NOTES / LEGEND

1. ALL WALLS TYPE A U.N.O.
2. SEE COMPOSITE PLANS FOR BALCONY FLOORING MATERIAL & GUARDRAIL LOCATIONS
3. SHOWER CURB, B5/A121
4. BATHROOM EXHAUST DUCT CHASE ON L300 GUESTROOMS ONLY

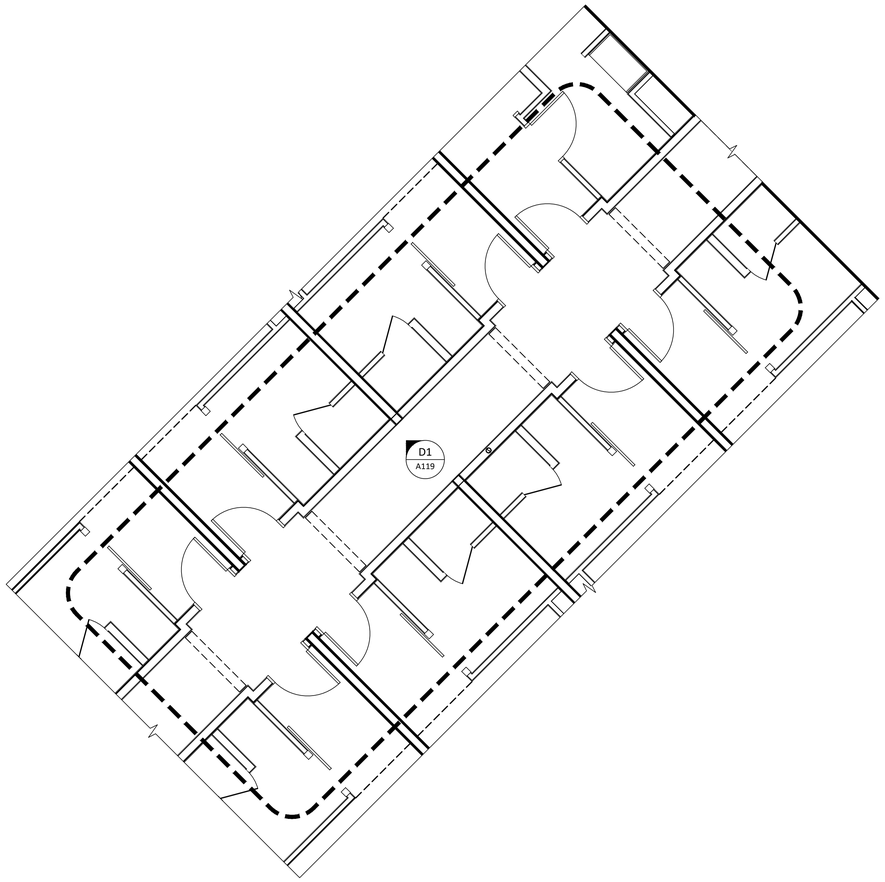

A1 | DETAILED PLAN @ GUEST ROOM CORRIDOR

A119 | 1/4" = 1'-0"

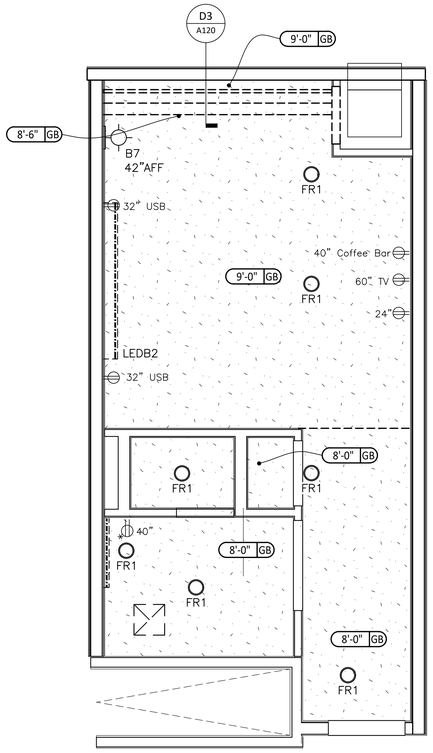

A4 | RCP: UNIT "K-C" (KING - COMPACT)

A119 | 3/8" = 1'-0"

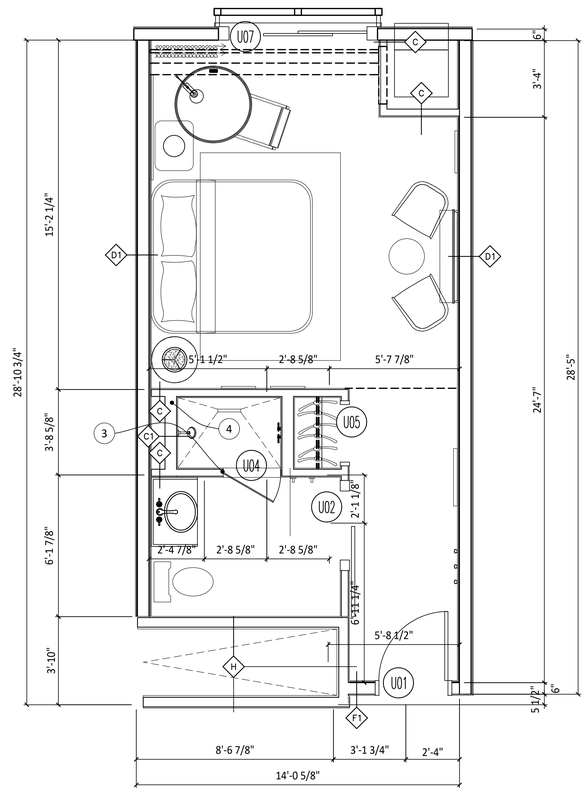

A5 | FLOOR PLAN: UNIT "K-C" (KING - COMPACT)

A119 | 3/8" = 1'-0"

KUO DIEDRICH CHI
730 PEACHTREE STREET, NE
STUDIO 325
ATLANTA, GEORGIA 30308
678.244.6270
www.KDCarchitects.com

ARCHITECT:

Mark A Diedrich

Digitally signed by Mark A Diedrich
Date: 2025.11.14 15:44:08 -05'00'

ARCH. REG: AR91344

CONSULTANT:

REVISIONS

DATE:	DESCRIPTION:
10/18/24	SCHEMATIC DESIGN
6/5/25	DESIGN DEVELOPMENT
10/23/25	50% CONSTRUCTION DOCS
11/14/25	PERMIT SET

PROJECT:

SERENITY SEASIDE RESORT

BUILDING #1

THE INN

186 SOUTH BAY SHORE DRIVE, EASTPOINT, FL 32328

Serenity Seaside Operations, LLC
174 Watercolor Way, PMB 410
Santa Rosa Beach, Florida 32459

JOB NUMBER: 23019.1

DATE: --/--/----

TITLE: FLOOR PLANS: BEDROOM UNIT "K-C" (KING - COMPACT)

SHEET: A119

K:\Projects\23\23019\DWGs\Serenity_Bldg-1_Inn\Sheets\23019.1-A119.dwg Plotted: Nov 14, 2025 - 1:59pm by CalebLawrence

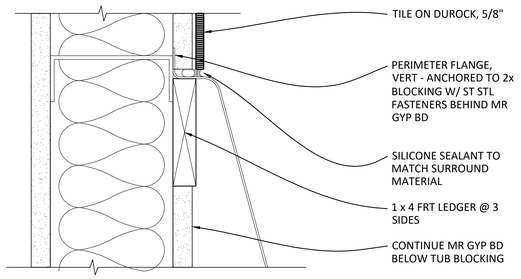

B AT NON-RATED WALL
-

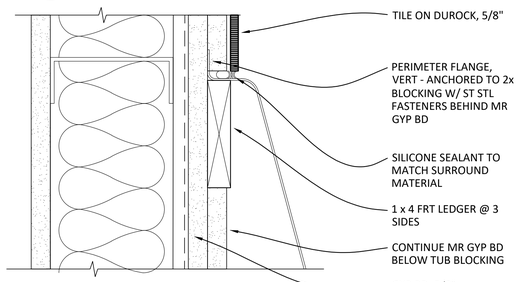

A SECTION
#" = 1'-0"

D1	SECT @ TUB /SHOWER - EDGE SUPPORT
A120	6" = 1'-0"

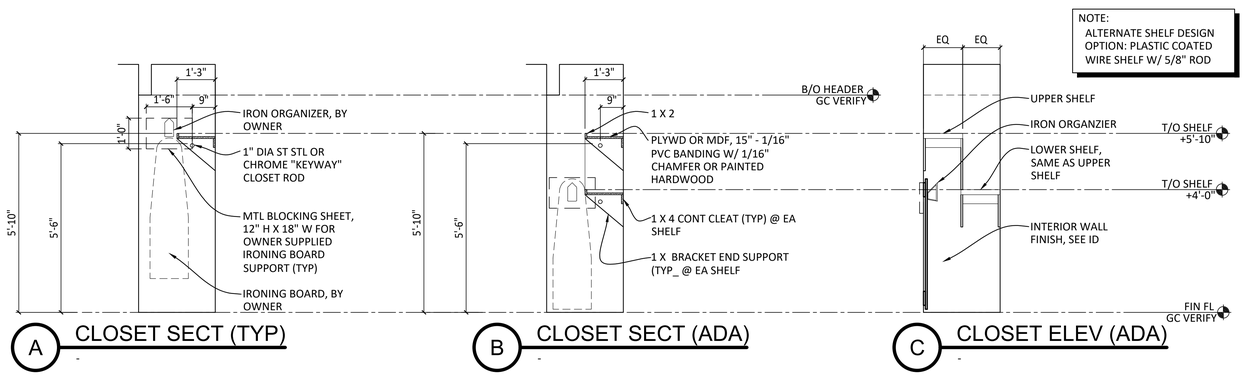

A CLOSET SECT (TYP)
-

B CLOSET SECT (ADA)
-

C CLOSET ELEV (ADA)
-

E3	DETAILS @ GUEST ROOM CLOSETS
A120	1/2" = 1'-0"

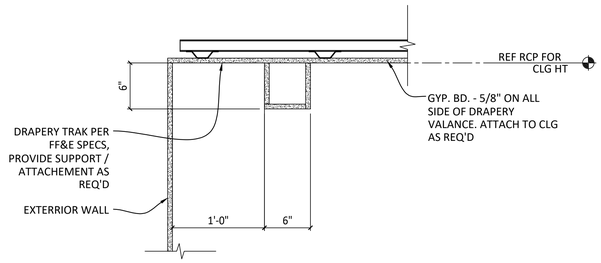

D3	SECTION @ GUEST RM DRAPERY
A120	1/2" = 1'-0"

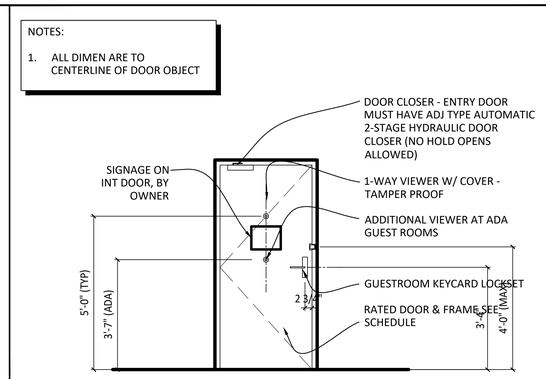

D6	ELEV @ GUEST RM ENTRY DOOR
A120	1/2" = 1'-0"

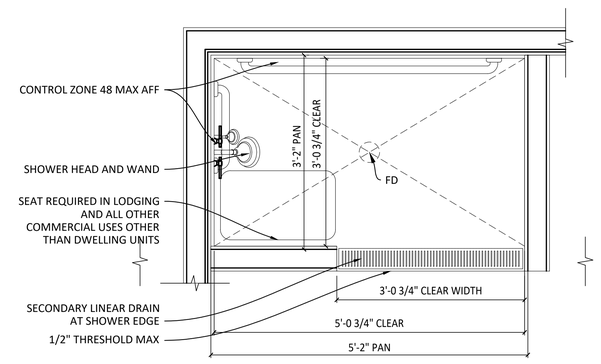

B3	PLAN @ ADA SHOWER
A120	1" = 1'-0"

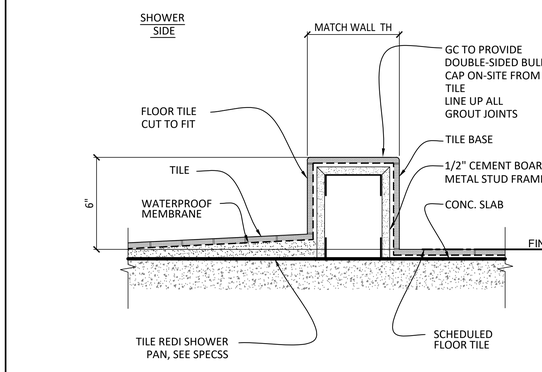

B5	SECTION @ SHOWER CURB
A120	3" = 1'-0"

DEVICES FOR THE HEARING IMPAIRED		
SYMBOL	**DEVICE**	**NOTES**
J PB	BUTTON FOR DOOR SIGNAL	OUTSIDE DOOR ON STRIKE SIDE, +46" AFF TO FACTORY LABEL ON COVER PLATE
J T	2-GANG BOX W/ TRANSFORMER FOR DOOR BELL	MOUNT TRANSFORMER IN SOFFIT OR CABINET AND PROVIDE ACCESS. WALL OUTLET ABOVE AND CENTERED ON DESK. OUTLET SPEC: LEGRAND RADIANT (2) TM8 USBWCC6; RWP262W 2-GANG WALL PLATE
DDS	DOORBELL DISABLE SWITCH	WALL BEHIND ENTRY DOOR, NEAR LIGHT SWITCH "DOORBELL DISABLE SWITCH" PLAQUE
SS	SMOKE STROBE, REMOTE	COMPATIBLE WITH SMOKE DETECTOR, BATHROOM +80" AFF "SMOKE" LABEL INTEGRAL TO DEVICE

NOTE:
1. REQUIREMENTS ON QTY & DISPERSAL OF GUESTROOMS W/ FEATURES FOR THE HEARING IMPAIRED TO BE IN ACCORDANCE W/ ALL APPLICABLE CODES & REGULATIONS. REFER ELEC FOR DOORBELL SPEC
2. PLAN DIAGRAM SHOWS GENERAL CONFIGURATION OF DOORBELL DEVICES - DESIGNER TO MODIFY AS REQUIRED FOR ACTUAL GUESTROOM CONFIGURATION AND LOCAL REQUIREMENTS.
3. PLAQUES (EXCEPT AS NOTED): PROVIDE AS REQUIRED; PLAQUES SHALL BE BLACK PHENOLIC W/ 1/4" WHITE ENGRAVED LETTERS.
4. REFER TO BUILDING PLANS FOR LOCATIONS OF GUESTROOMS WITH ADA COMMUNICATION FEATURES.

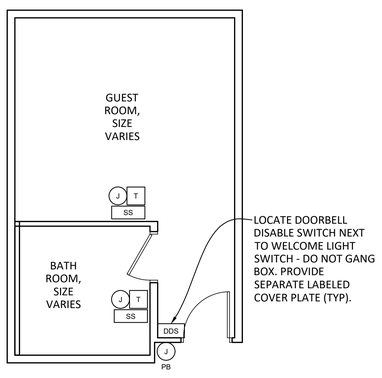

A1	LAYOUT FOR ADA COMMUNICATION FEATURES
A120	1/4" = 1'-0"

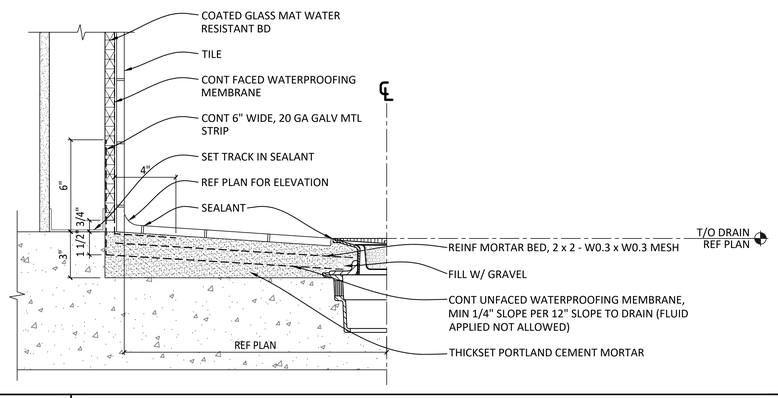

A3	SECTION @ ADA SHOWER DRAIN (CENTER)
A120	3" = 1'-0"

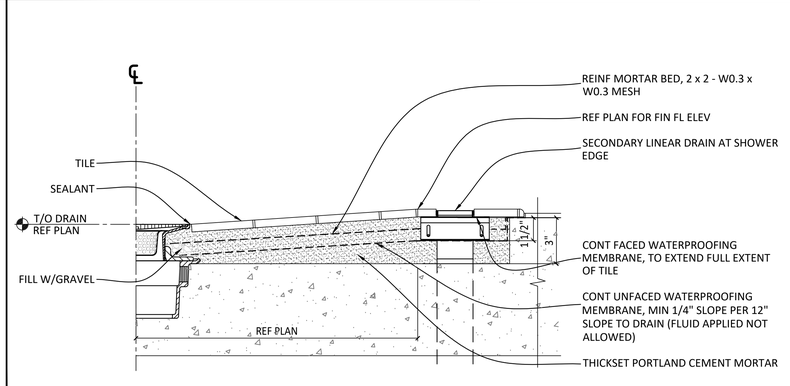

A5	SECTION @ ADA SHOWER DRAIN (THRESHOLD)
A120	3" = 1'-0"

SHEET NOTES / LEGEND

1. NOTE TO GC - SHOWER WALL AND FLOOR ENCLOSURE IS DETAILED AS A TILED SYSTEM WITH A BASIS OF DESIGN AS SCHLUTER KERDI-BOARD. A PREFABRICATED SHOWER PAN SIMILAR TO ENCOMPASS FOUR WALL SHOWER BASE WILL BE ACCEPTABLE.

GENERAL NOTES

A. -

KUO DIEDRICH CHI
730 PEACHTREE STREET, NE
STUDIO 325
ATLANTA, GEORGIA 30308
678.244.6270
www.KDCarchitects.com

ARCHITECT:
Mark A Diedrich
Digitally signed by Mark A Diedrich
Date: 2025.11.14 15:44:49 -05'00'
ARCH. REG: AR91344

CONSULTANT:

REVISIONS

DATE:	DESCRIPTION:
10/18/24	SCHEMATIC DESIGN
6/5/25	DESIGN DEVELOPMENT
10/23/25	50% CONSTRUCTION DOCS
11/14/25	PERMIT SET

PROJECT:
SERENITY SEASIDE RESORT
BUILDING #1
THE INN
186 SOUTH BAY SHORE DRIVE, EASTPOINT, FL 32328

Serenity Seaside Operations, LLC
174 Watercolor Way, PMB 410
Santa Rosa Beach, Florida 32459

JOB NUMBER: 23019.1
DATE: --/--/----
TITLE: GUESTROOM DETAILS
SHEET: A120

K:\Projects\23\23019\DWGs\Serenity_Bldg-1_Inn\Sheets\23019.1-A120.dwg Plotted: Nov. 14, 2025 - 1:59pm by CalebLawrence

GENERAL NOTES

A. ALL FURNITURE IS BY OWNER
B. HOTEL ROOM MATRIX, C4/G114
C. LIFE SAFETY PLANS, SHEETS G111, G112, & G113
D. DIMENSIONS ARE TO FIN FACE OF PARTITION, UNO
E. PROVIDE BLOCKING FOR ALL SHELVING & TOILET ACCESSORIES
F. ALL WALL DEVICES & OUTLETS IN RATED WALLS TO BE LOCATED SO THAT THEY ARE NOT "BACK TO BACK"
G. MOUNTING HEIGHTS, SHEETS G106 & G107
H. DETAILED ELEV @ GUEST RM ENTRY DOOR, B6/A120
I. NOT USED
J. PLANS @ ADA SHOWERS, B3/A120.
K. SECTION @ SHOWER DRAINS, A2 & A5/A120
L. SECTION @ TUB/SHOWER EDGE SUPPORT, D1/A120
M. DEVICE LAYOUT FOR ADA GUEST RM, A1/A120
N. DETAILS @ GUEST RM CLOSETS, E3/A120
O. REFER TO BUILDING PLANS FOR LOCATIONS OF ADA AND HEARING GUESTROOM UNITS

SHEET NOTES / LEGEND

1. ALL WALLS TYPE A U.N.O.
2. SEE COMPOSITE PLANS FOR BALCONY FLOORING MATERIAL & GUARDRAIL LOCATIONS
3. SIM ELEVATIONS TO A117
4. BATHROOM EXHAUST DUCT CHASE ON L300 GUESTROOMS ONLY

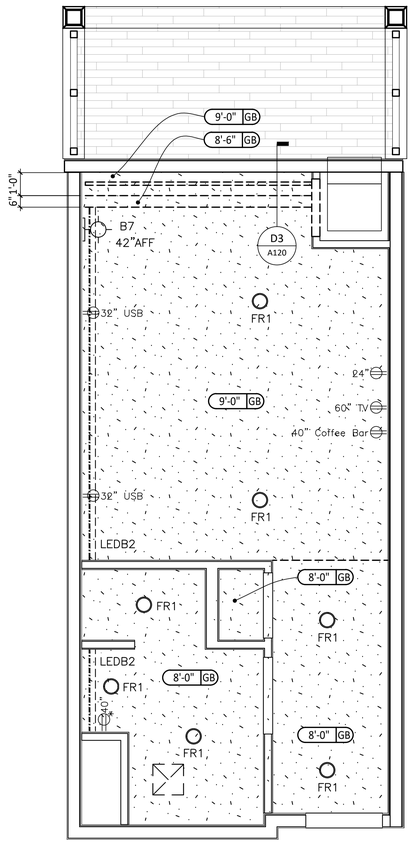

A3 | RCP: UNIT "K-ADA" (KING - ACCESSIBLE)
A121 | 3/8" = 1'-0"

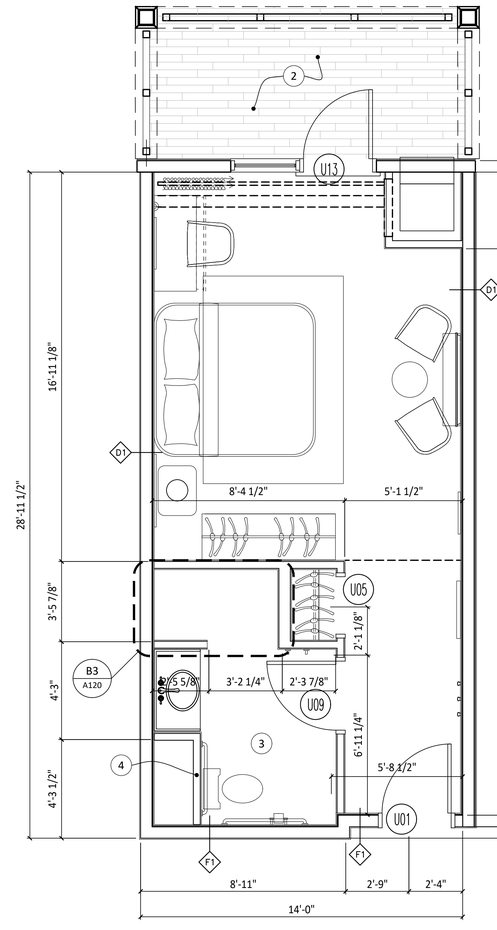

A5 | FLOOR PLAN: UNIT "K-ADA" (KING - ACCESSIBLE)
A121 | 3/8" = 1'-0"

KUO DIEDRICH CHI
730 PEACHTREE STREET, NE
STUDIO 325
ATLANTA, GEORGIA 30308
678.244.6270
www.KDCarchitects.com

ARCHITECT:
Mark A Diedrich
Digitally signed by Mark A Diedrich
Date: 2025.11.14 15:47:08 -05'00'
ARCH. REG: AR91344

CONSULTANT:

REVISIONS

DATE:	DESCRIPTION:
10/18/24	SCHEMATIC DESIGN
6/5/25	DESIGN DEVELOPMENT
10/23/25	50% CONSTRUCTION DOCS
11/14/25	PERMIT SET

PROJECT:
SERENITY SEASIDE RESORT

BUILDING #1

THE INN

186 SOUTH BAY SHORE DRIVE, EASTPOINT, FL 32328

Serenity Seaside Operations, LLC
174 Watercolor Way, PMB 410
Santa Rosa Beach, Florida 32459

JOB NUMBER: 23019.1

DATE: --/--/----

TITLE:
FLOOR PLANS: BEDROOM UNIT "K-ADA" (KING - ACCESSIBLE)

SHEET:
A121

K:\Projects\23\23019\DWGs\Serenity_Bldg-1_Inn\Sheets\23019.1-A121.dwg Plotted: Nov 14, 2025 – 1:59pm by CalebLawrence

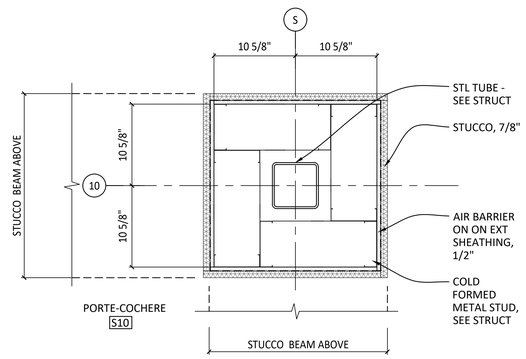

E1 PLAN DETAIL @ LEVEL 100 "WING B"

A151 | 1-1/2" = 1'-0"

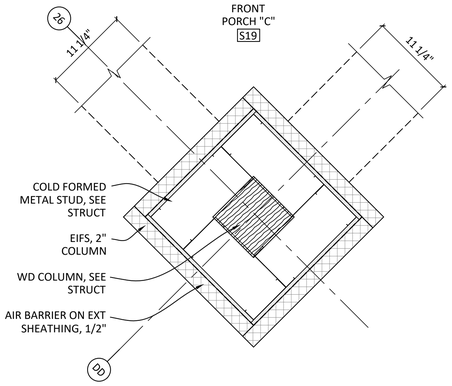

E3 PLAN DETAIL @ LEVEL 100 "WING C"

A151 | 1-1/2" = 1'-0"

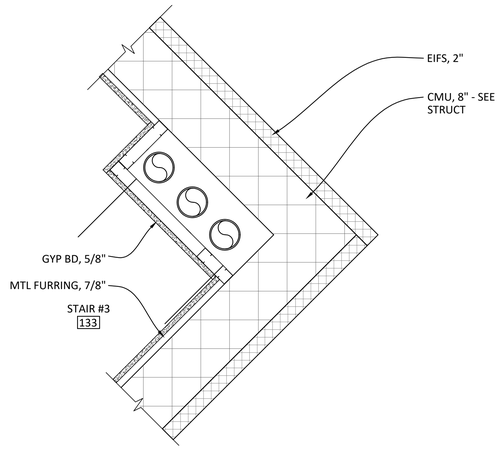

E5 PLAN DETAIL @ LEVEL 100 "WING C"

A151 | 1-1/2" = 1'-0"

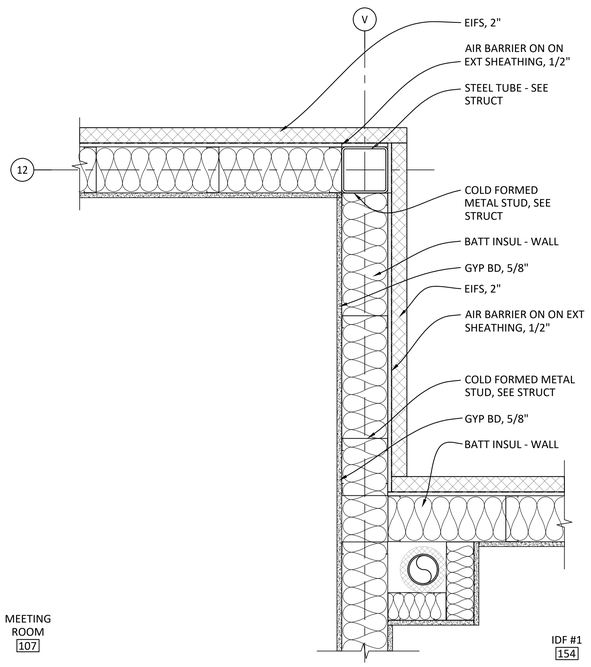

C1 PLAN DETAIL @ LEVEL 100 "WING B"

A151 | 1-1/2" = 1'-0"

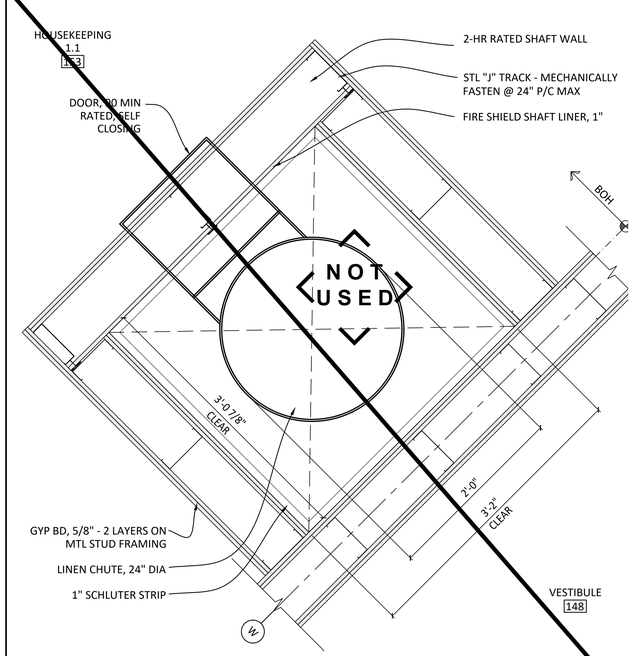

C3 PLAN DETAIL @ LEVEL 100 "WING B"

A151 | 1-1/2" = 1'-0"

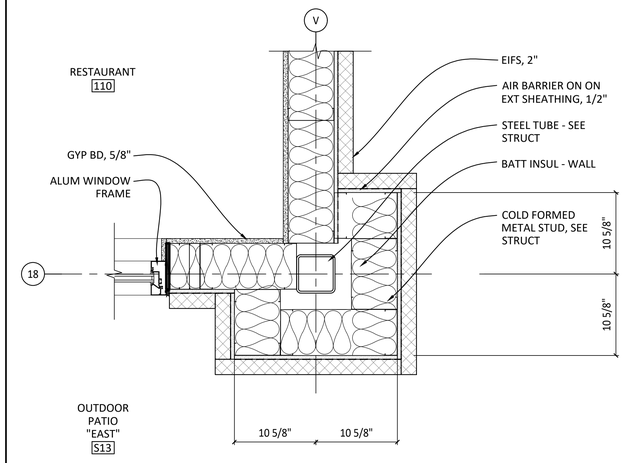

C5 PLAN DETAIL @ LEVEL 100 "WING B"

A151 | 1-1/2" = 1'-0"

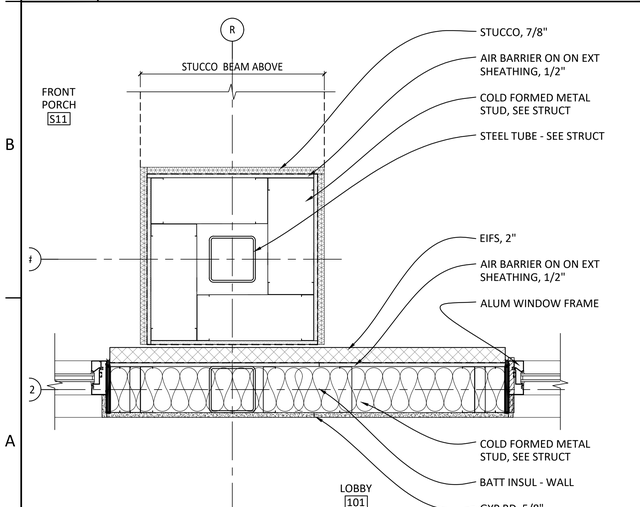

A1 PLAN DETAIL @ LEVEL 100 "WING B"

A151 | 1-1/2" = 1'-0"

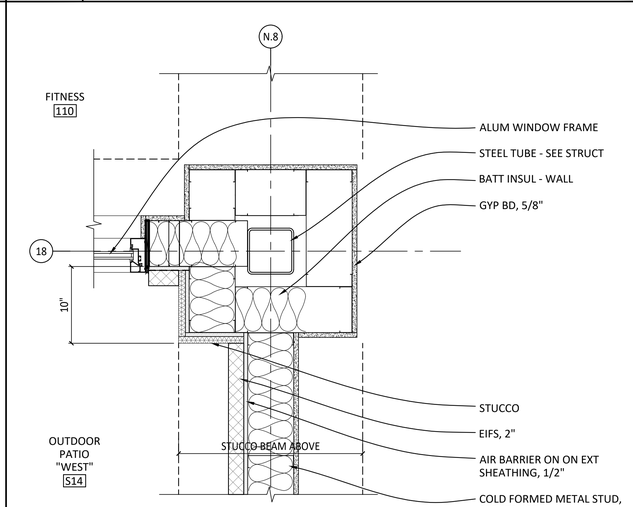

A3 PLAN DETAIL @ LEVEL 100 "WING B"

A151 | 1-1/2" = 1'-0"

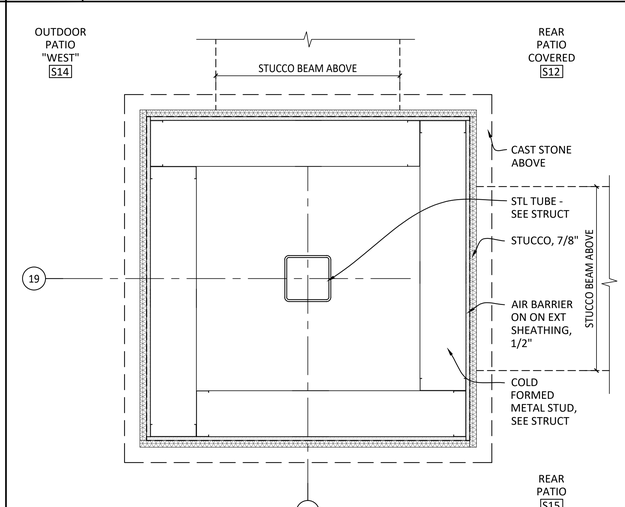

A5 PLAN DETAIL @ LEVEL 100 "WING B"

A151 | 1-1/2" = 1'-0"

SHEET NOTES / LEGEND

1. -

GENERAL NOTES

A. PLAN DETAIL CALLOUTS ARE ON SHEETS A101(A-C), A102(A-C), A103(A-C)

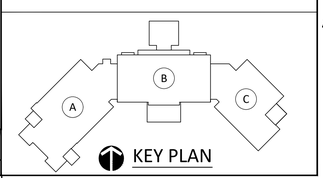

KUO DIEDRICH CHI
730 PEACHTREE STREET, NE
STUDIO 325
ATLANTA, GEORGIA 30308
678.244.6270
www.KDCarchitects.com

ARCHITECT:

Mark A Diedrich

Digitally signed by Mark A Diedrich
Date: 2025.11.14 15:47:51 -05'00'

ARCH. REG: AR91344

CONSULTANT:

REVISIONS

DATE:	DESCRIPTION:
10/18/24	SCHEMATIC DESIGN
6/5/25	DESIGN DEVELOPMENT
10/23/25	50% CONSTRUCTION DOCS
11/14/25	PERMIT SET

PROJECT:

SERENITY SEASIDE RESORT

BUILDING #1

THE INN

186 SOUTH BAY SHORE DRIVE, EASTPOINT, FL 32328

Serenity Seaside Operations, LLC
174 Watercolor Way, PMB 410
Santa Rosa Beach, Florida 32459

JOB NUMBER: 23019.1

DATE: --/--/----

TITLE: PLAN DETAILS: LEVEL 100

SHEET: A151

K:\Projects\23\23019\DWGs\Serenity_Bldg-1_Inn\Sheets\23019.1-A151.dwg Plotted: Nov 14, 2025 - 1:16pm by ColebLawrence

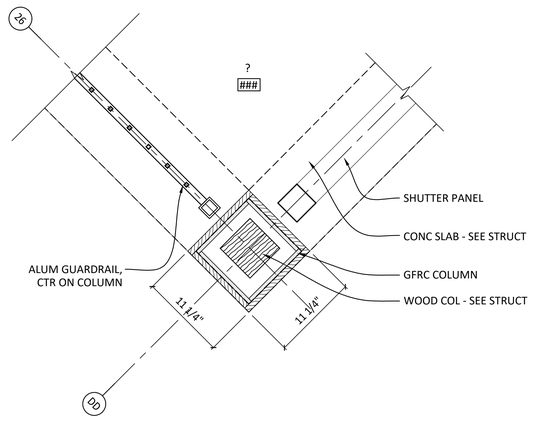

E1	PLAN DETAIL @ LEVEL 200 "WING C"
A152	1-1/2" = 1'-0"

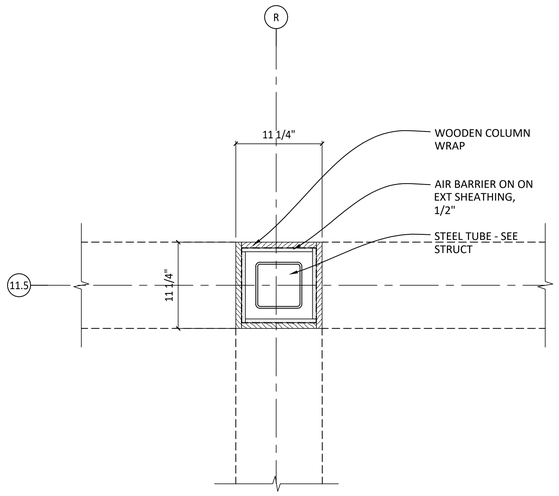

E3	PLAN DETAIL @ LEVEL 200 "WING B"
A152	1-1/2" = 1'-0"

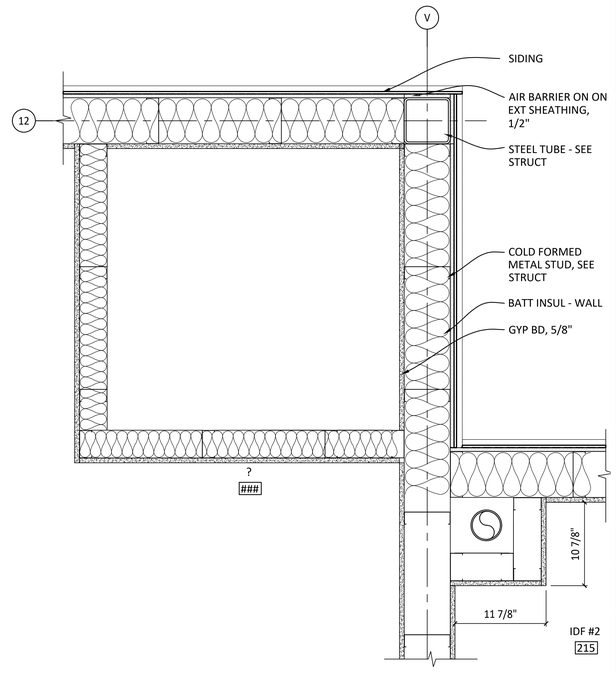

C1	PLAN DETAIL @ LEVEL 200 "WING B"
A152	1-1/2" = 1'-0"

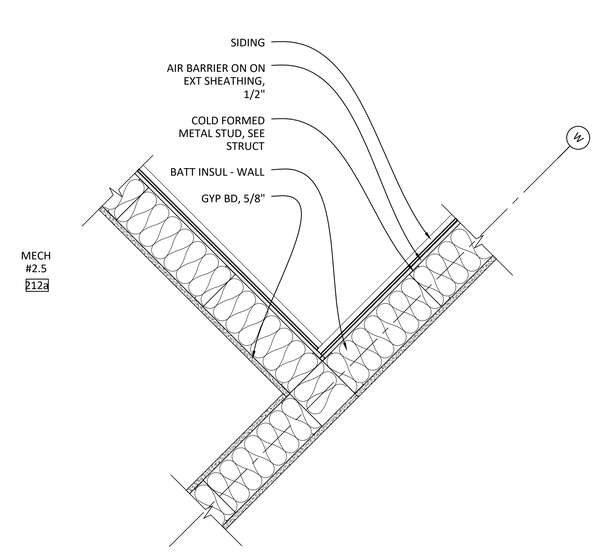

C3	PLAN DETAIL @ LEVEL 200 "WING C"
A152	1-1/2" = 1'-0"

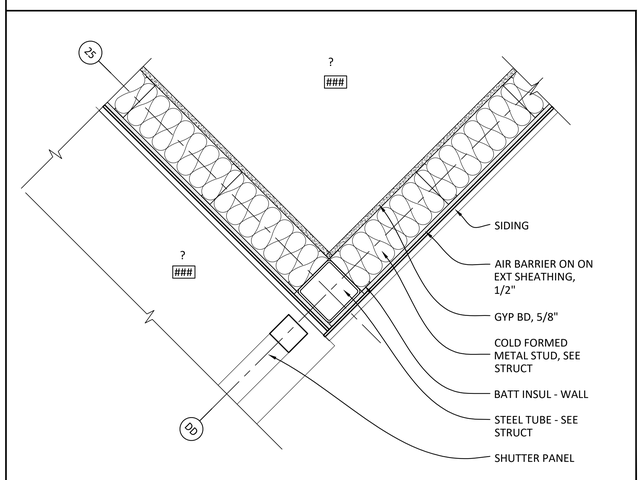

C5	PLAN DETAIL @ LEVEL 200 "WING C"
A152	1-1/2" = 1'-0"

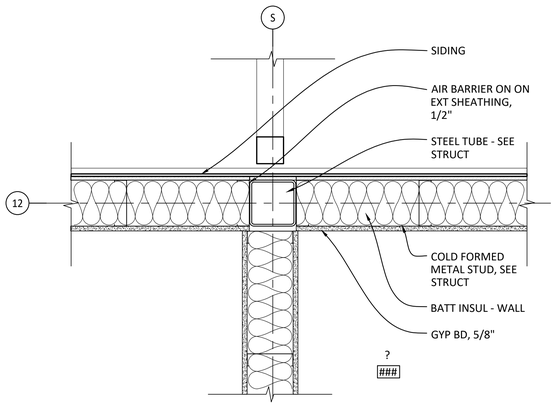

A1	PLAN DETAIL @ LEVEL 200 "WING B"
A152	1-1/2" = 1'-0"

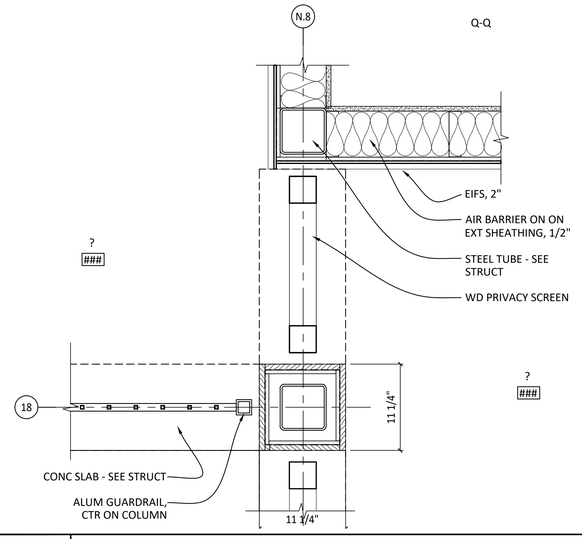

A3	PLAN DETAIL @ LEVEL 200 "WING B"
A152	1-1/2" = 1'-0"

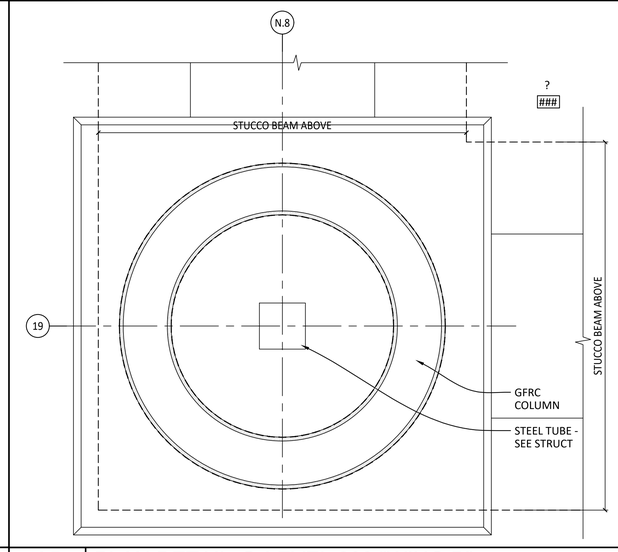

A5	PLAN DETAIL @ LEVEL 200 "WING B"
A152	1-1/2" = 1'-0"

SHEET NOTES / LEGEND

1. -

GENERAL NOTES

A. PLAN DETAIL CALLOUTS ARE ON SHEETS A101(A-C), A102(A-C), A103(A-C)

KUO DIEDRICH CHI

730 PEACHTREE STREET, NE
STUDIO 325
ATLANTA, GEORGIA 30308
678.244.6270

www.KDCarchitects.com

ARCHITECT:

Mark A Diedrich

Digitally signed by Mark A Diedrich
Date: 2025.11.14 15:48:32 -05'00'

ARCH. REG: AR91344

CONSULTANT:

REVISIONS

DATE:	DESCRIPTION:
10/18/24	SCHEMATIC DESIGN
6/5/25	DESIGN DEVELOPMENT
10/23/25	50% CONSTRUCTION DOCS
11/14/25	PERMIT SET

PROJECT:

SERENITY SEASIDE RESORT

BUILDING #1

THE INN

186 SOUTH BAY SHORE DRIVE, EASTPOINT, FL 32328

Serenity Seaside Operations, LLC
174 Watercolor Way, PMB 410
Santa Rosa Beach, Florida 32459

JOB NUMBER: 23019.1

DATE: --/--/----

TITLE: PLAN DETAILS: LEVEL 200

SHEET: A152

K:\Projects\23\23019\DWGs\Serenity_Bldg-1_Inn\Sheets\23019.1-A152.dwg Plotted: Nov 14, 2025 - 1:16pm by ColebLawrence

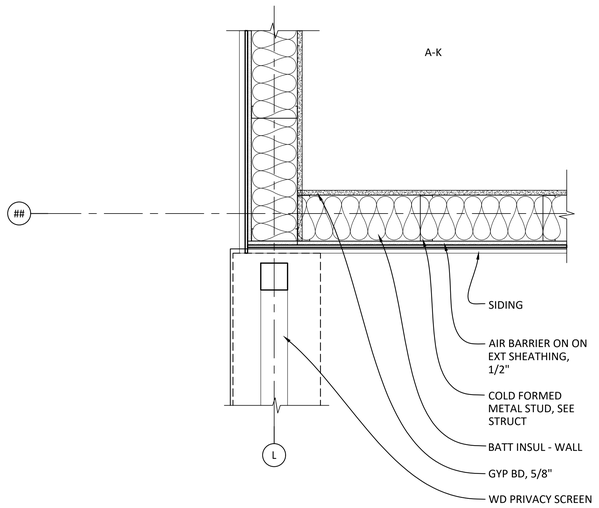

E1	PLAN DETAIL @ LEVEL 300 "WING C"
A153	1-1/2" = 1'-0"

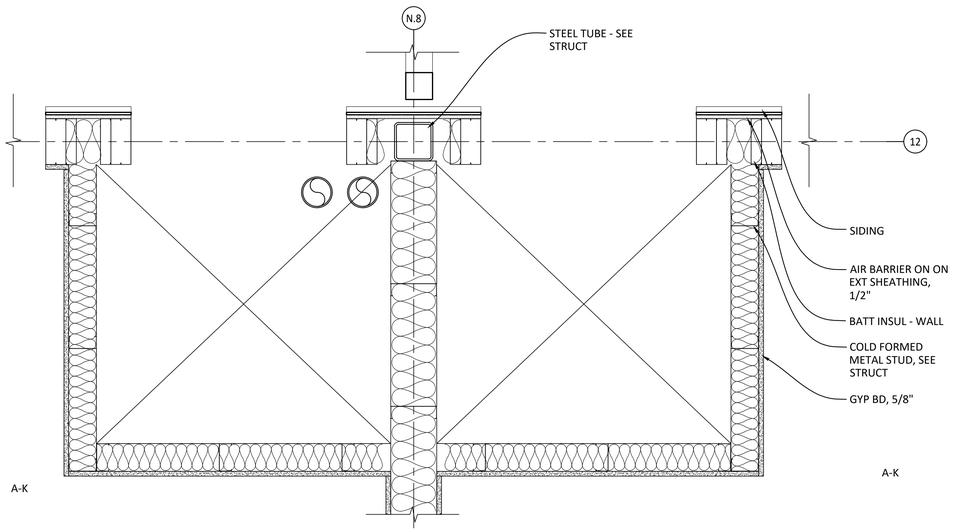

E3	PLAN DETAIL @ LEVEL 300 "WING B"
A153	1-1/2" = 1'-0"

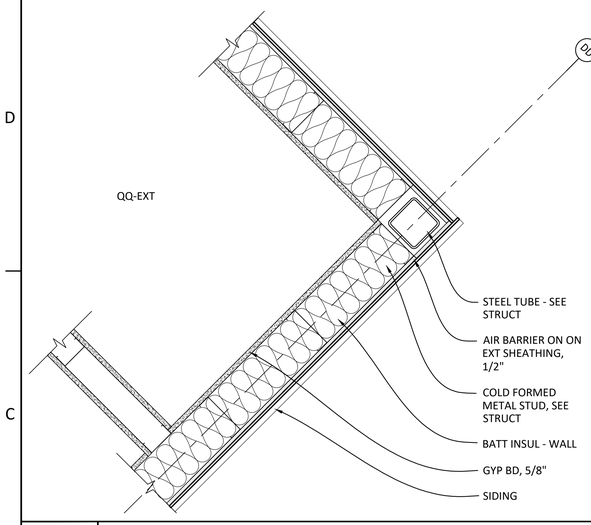

C1	PLAN DETAIL @ LEVEL 300 "WING C"
A153	1-1/2" = 1'-0"

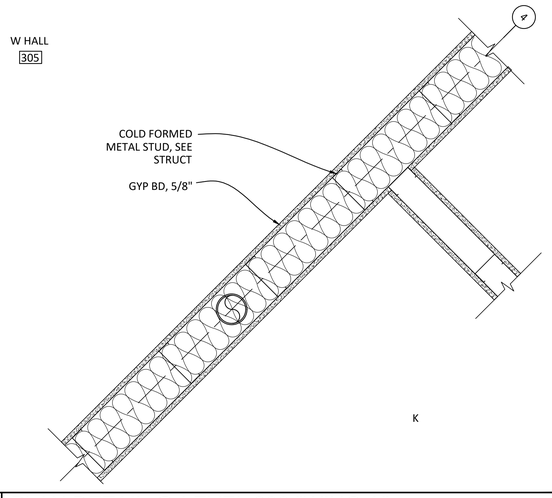

C3	PLAN DETAIL @ LEVEL 300 "WING A"
A153	1-1/2" = 1'-0"

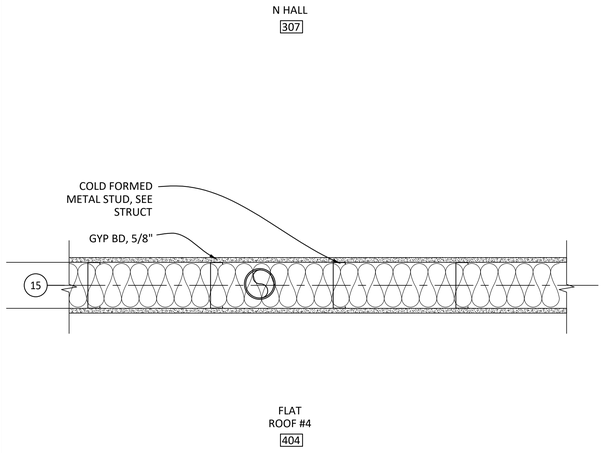

C5	PLAN DETAIL @ LEVEL 300 "WING C"
A153	1-1/2" = 1'-0"

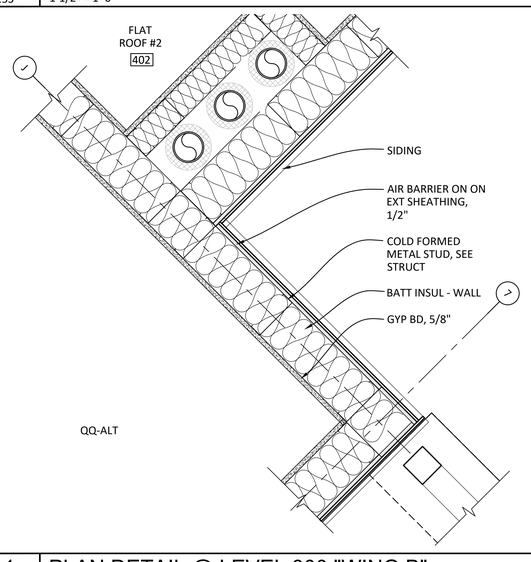

A1	PLAN DETAIL @ LEVEL 300 "WING B"
A153	1-1/2" = 1'-0"

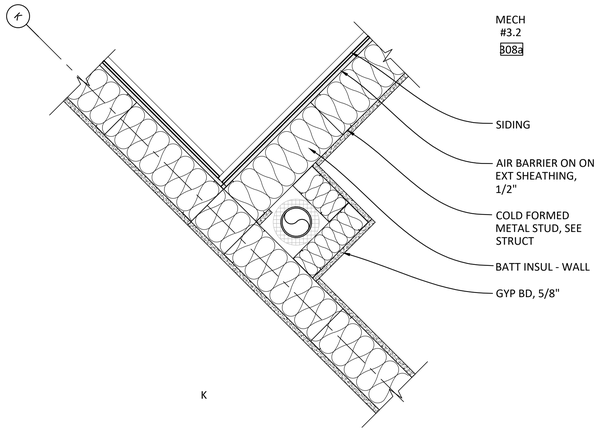

A3	PLAN DETAIL @ LEVEL 300 "WING B"
A153	1-1/2" = 1'-0"

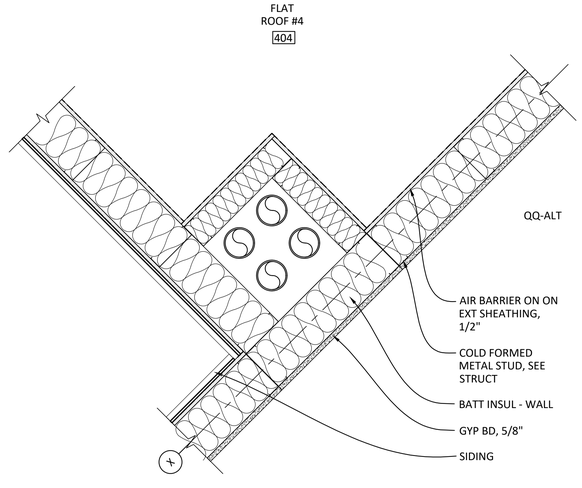

A5	PLAN DETAIL @ LEVEL 300 "WING B"
A153	1-1/2" = 1'-0"

SHEET NOTES / LEGEND

1. -

GENERAL NOTES

A. PLAN DETAIL CALLOUTS ARE ON SHEETS A101(A-C), A102(A-C), A103(A-C)

KUO DIEDRICH CHI
730 PEACHTREE STREET, NE
STUDIO 325
ATLANTA, GEORGIA 30308
678.244.6270
www.KDCarchitects.com

ARCHITECT:
Mark A Diedrich
Digitally signed by Mark A Diedrich
Date: 2025.11.14 15:49:15 -05'00'
ARCH. REG: AR91344

CONSULTANT:

REVISIONS	
DATE:	DESCRIPTION:
10/18/24	SCHEMATIC DESIGN
6/5/25	DESIGN DEVELOPMENT
10/23/25	50% CONSTRUCTION DOCS
11/14/25	PERMIT SET

PROJECT:
SERENITY SEASIDE RESORT
BUILDING #1
THE INN
186 SOUTH BAY SHORE DRIVE, EASTPOINT, FL 32328

Serenity Seaside Operations, LLC
174 Watercolor Way, PMB 410
Santa Rosa Beach, Florida 32459

JOB NUMBER: 23019.1
DATE: --/--/----
TITLE: PLAN DETAILS: LEVEL 300
SHEET: A153

K:\Projects\23\23019\DWGs\Serenity_Bldg-1_Inn\Sheets\23019.1-A153.dwg Plotted: Nov 14, 2025 - 1:16pm by ColebLawrence

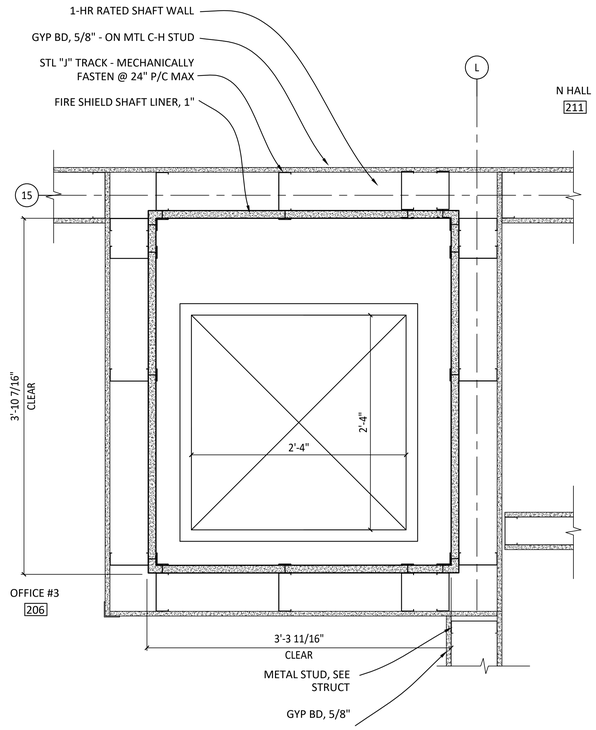

D1 PLAN DETAIL @ LEVEL 200 "WING A"

A154 | 1-1/2" = 1'-0"

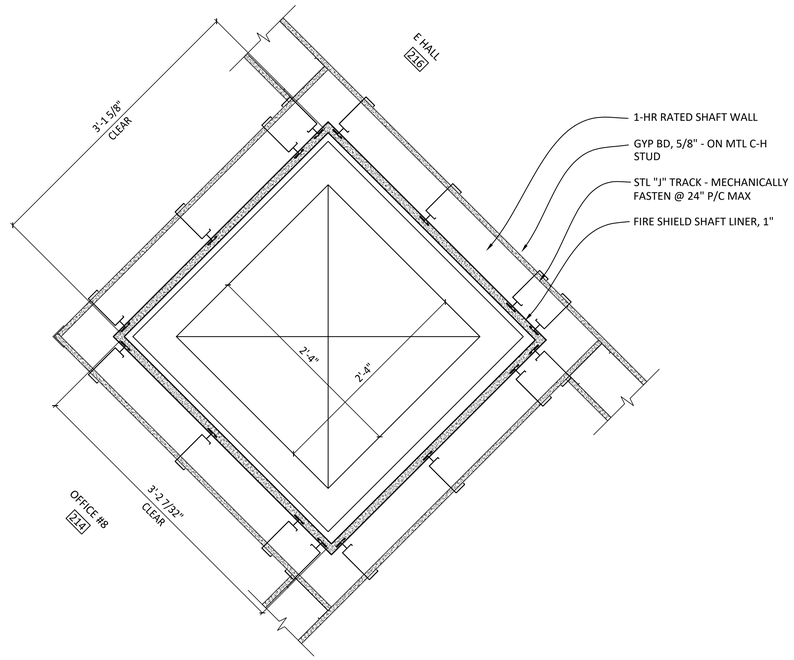

E4 PLAN DETAIL @ LEVEL 200 "WING C"

A154 | 1-1/2" = 1'-0"

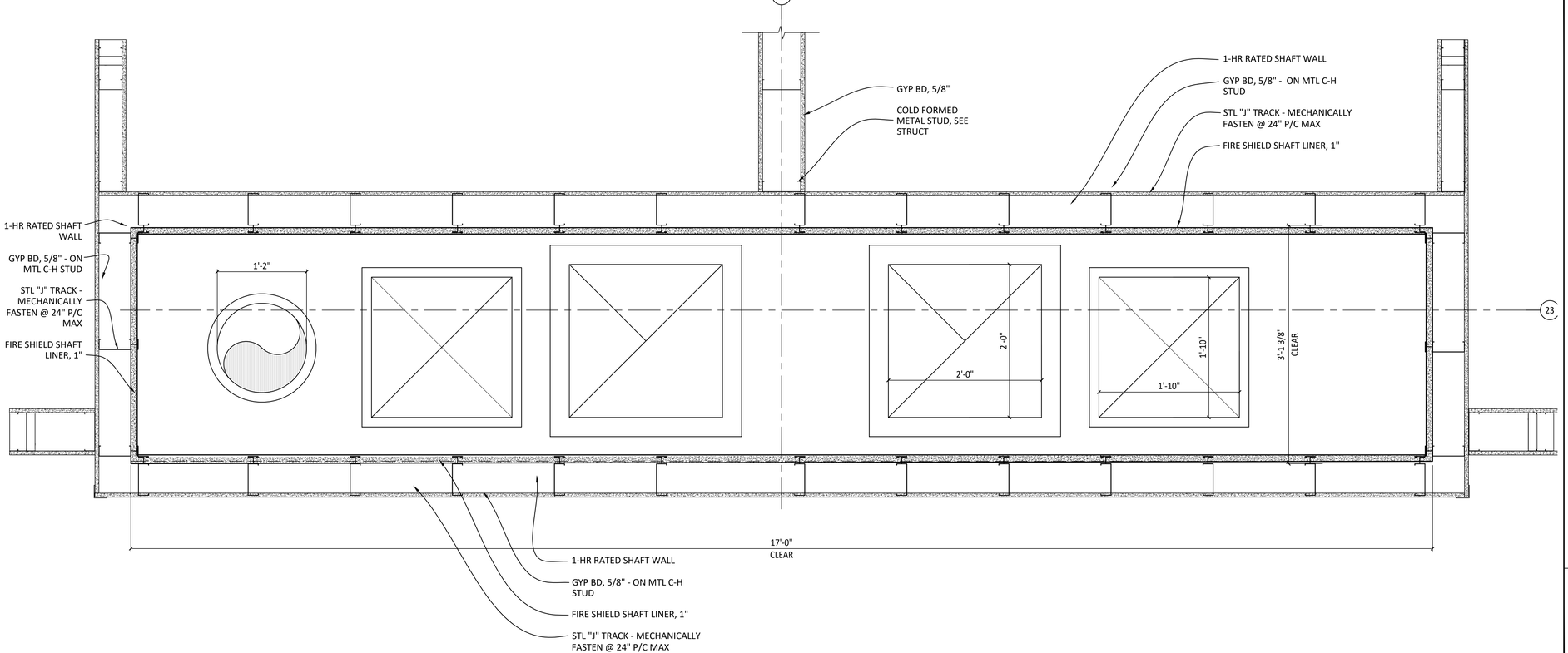

A1 PLAN DETAIL @ LEVEL 200 "WING C"

A154 | 1-1/2" = 1'-0"

SHEET NOTES / LEGEND

1. FINISH FACE OS SHAFT WALL ASSEMBLIES TO ALIGN / BE FLUSH WITH THE FINISH FACE OF ADJACENT WALLS
2. REFER TO B6/A862 FOR BOTTOM OF SHAFT ENCLOSURE

GENERAL NOTES

A. PLAN DETAIL CALLOUTS ARE ON SHEETS A101(A-C), A102(A-C), A103(A-C)

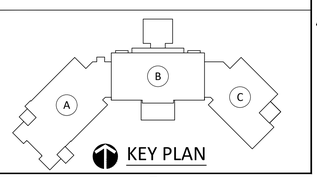

KUO DIEDRICH CHI
730 PEACHTREE STREET, NE
STUDIO 325
ATLANTA, GEORGIA 30308
678.244.6270
www.KDCarchitects.com

ARCHITECT:

Mark A Diedrich

Digitally signed by Mark A Diedrich
Date: 2025.11.14 15:50:06 -05'00'

ARCH. REG: AR91344

CONSULTANT:

REVISIONS

DATE:	DESCRIPTION:
10/18/24	SCHEMATIC DESIGN
6/5/25	DESIGN DEVELOPMENT
10/23/25	50% CONSTRUCTION DOCS
11/14/25	PERMIT SET

PROJECT:

SERENITY SEASIDE RESORT

BUILDING #1

THE INN

186 SOUTH BAY SHORE DRIVE, EASTPOINT, FL 32328

Serenity Seaside Operations, LLC
174 Watercolor Way, PMB 410
Santa Rosa Beach, Florida 32459

JOB NUMBER: 23019.1

DATE: --/--/----

TITLE: PLAN DETAILS @ SHAFTS

SHEET: A154

K:\Projects\23\23019\DWGs\Serenity_Bldg-1_Inn\Sheets\23019.1-A154.dwg Plotted: Nov 14, 2025 - 1:16pm by CalebLawrence

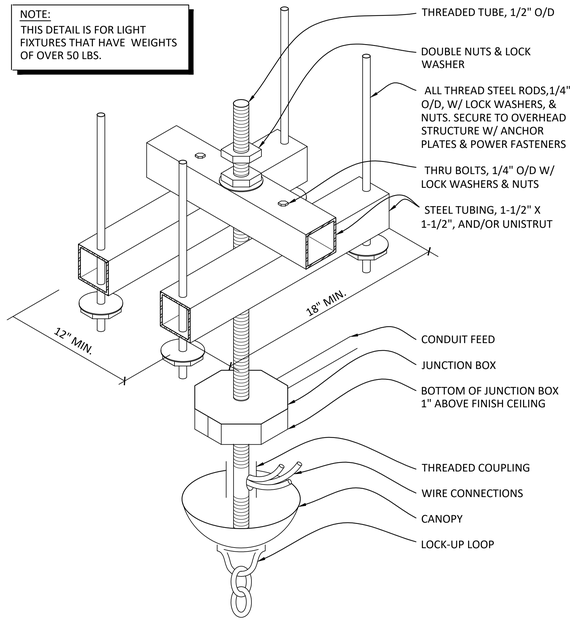

D1	CEILING DETAIL @ CHANDELIER SUPPORT
A201A	3 = 1'-0"

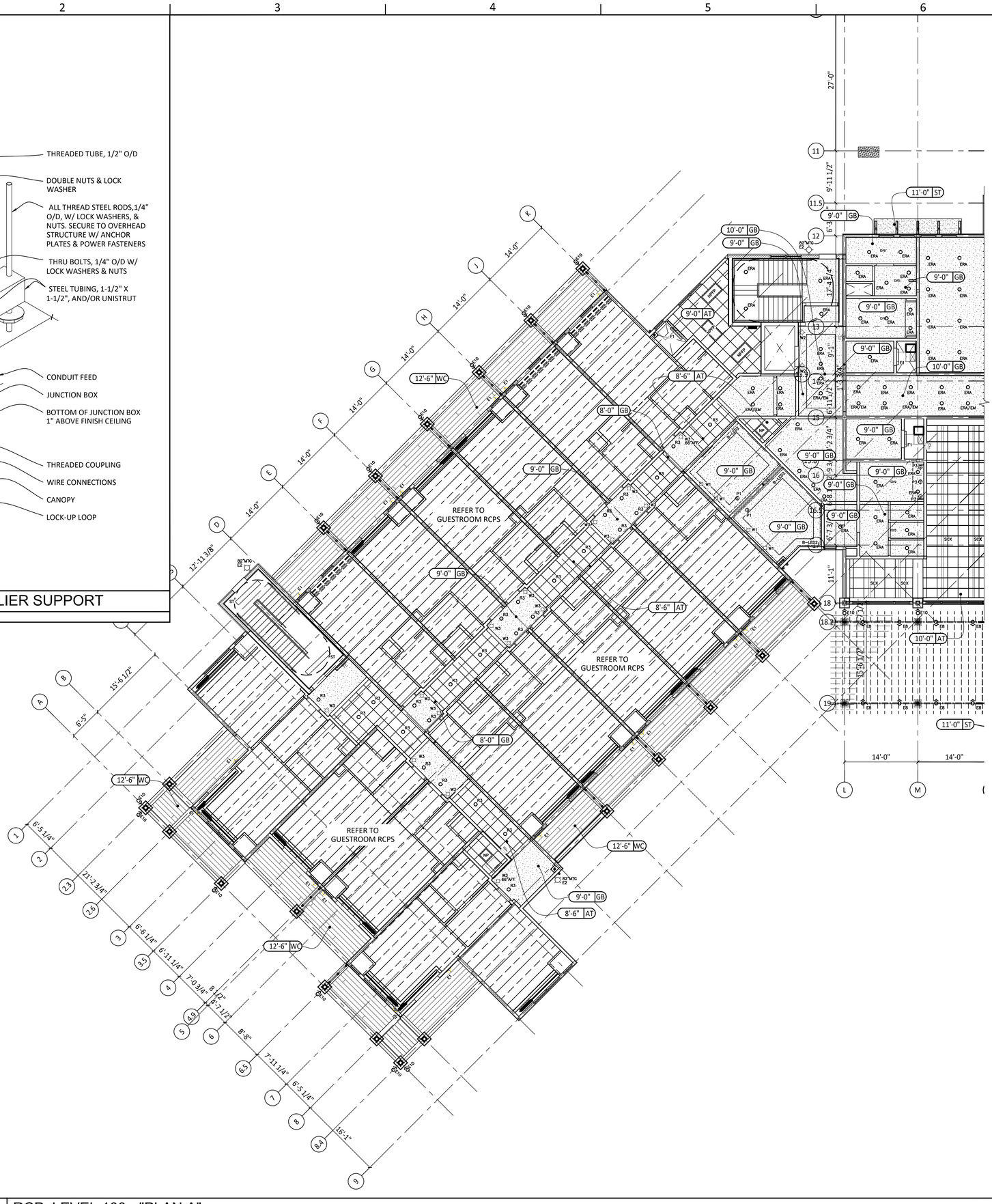

A2	RCP: LEVEL 100 - "PLAN A"
A201A	1/8" = 1'-0"

SHEET NOTES / LEGEND

1. -

LEGEND

[at] ACOUSTIC CLG TILE : 24" x 24"		[gb] GYP. BD.	
[lw] LINEAR WOOD CEILING W/ FABRIC		[wc] WOOD CEILING	
[ef] EIFS CEILING		[st] STUCOO CEILING	
REFER TO BEDROOM UNITS FOR CLG INFO THIS AREA ONLY		[ex] PVC TONGUE AND GROOVE CEILING	
LINEAR AIR SUPPLY		X'-XX" XX	CEILING HT. A.F.F./TYPE
LINEAR AIR RETURN			ACCESS PANEL
SQUARE AIR SUPPLY		OS	OCCUPANCY SENSOR
SQUARE AIR RETURN		AV	AUDIO/VOICE ALARM
UNIT HEATER-CEILING MTD.		SD	SMOKE DETECTOR
2 x 4 LIGHT			EXIT SIGN
STRIP LIGHT			CEILING FAN
PENDANT LIGHT			
SURFACE MOUNTED PENDANT		WAP	WIRELESS APPLICATION POINT (BY OWNER)
WALL MOUNT SCONCE			CAMERA (BY OWNER), GC PROVIDE SINGEL CAT6 & SINGLE GANG BOX
RECESSED WALL WASHER			
RECESSED DOWNLIGHT			
OPEN CEILING LIGHT		SH	SPEAKER CEILING MTD (BY OWNER)

GENERAL NOTES

A. ACT SPECS ON SHEET A201

B. GYP BD CEILING DETAIL, SEE E1/A202

C. REFER TO ADDITIONAL CEILING NOTES ON SHEET G111

D. ALL HVAC SLOT DIFFUSERS TO BE PRIMED, PAINTED TO MATCH ADJACENT CEILING

E. PROVIDE SOUND BATTS ABOVE CEILING OF ALL PUBLIC RESTROOMS

F. CHANDELIER SUPPORT DETAIL, D1/A201A

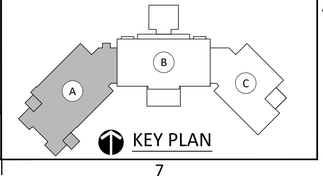

KUO DIEDRICH CHI
730 PEACHTREE STREET, NE
STUDIO 325
ATLANTA, GEORGIA 30308
678.244.6270
www.KDCarchitects.com

ARCHITECT:

ARCH. REG: AR91344

CONSULTANT:

REVISIONS

DATE:	DESCRIPTION:
10/18/24	SCHEMATIC DESIGN
6/5/25	DESIGN DEVELOPMENT
10/23/25	50% CONSTRUCTION DOCS
11/14/25	PERMIT SET

PROJECT:
SERENITY SEASIDE RESORT

BUILDING #1

THE INN

186 SOUTH BAY SHORE DRIVE, EASTPOINT, FL 32328

Serenity Seaside Operations, LLC
174 Watercolor Way, PMB 410
Santa Rosa Beach, Florida 32459

JOB NUMBER: 23019.1

DATE: --/--/----

TITLE: RCP: LEVEL 100 - "PLAN A"

SHEET: A201A

K:\Projects\23\23019\DWGs\Serenity_Bldg-1_Inn\Sheets\23019.1-A201A.dwg Plotted: Nov 13, 2025 - 6:14pm by CalebLawrence

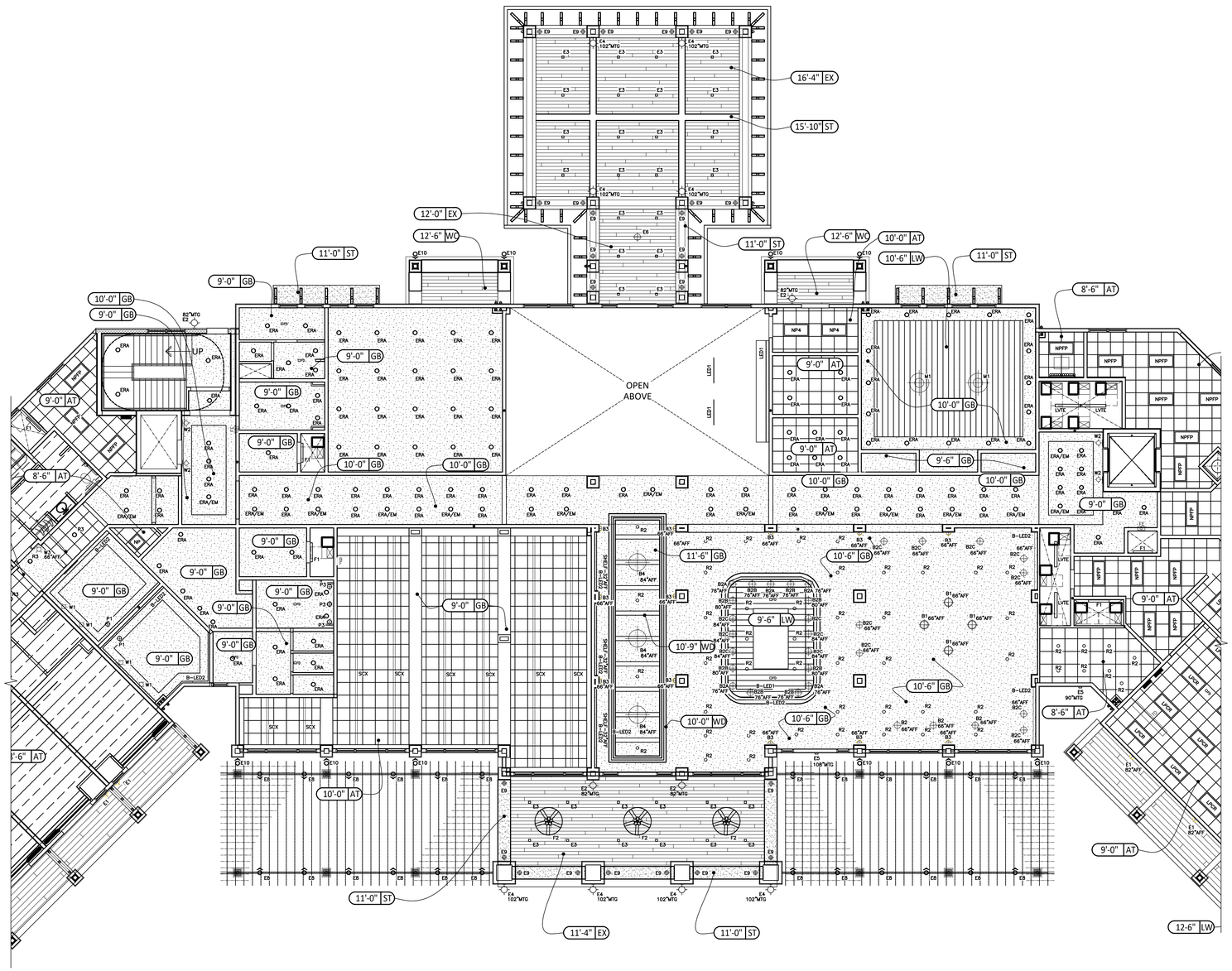

A2	RCP: LEVEL 100 - "PLAN B"
A201B	1/8" = 1'-0"

PROJECT NORTH

SHEET NOTES / LEGEND

1. -

LEGEND

[at] ACOUSTIC CLG TILE : 24" x 24"		[gb] GYP. BD.	
[lw] LINEAR WOOD CEILING W/ FABRIC		[wc] WOOD CEILING	
[ef] EIFS CEILING		[st] STUCOO CEILING	
REFER TO BEDROOM UNITS FOR CLG INFO THIS AREA ONLY		[ex] PVC TONGUE AND GROOVE CEILING	
LINEAR AIR SUPPLY		X'-XX" XX	CEILING HT. A.F.F./TYPE
LINEAR AIR RETURN			ACCESS PANEL
SQUARE AIR SUPPLY		OS	OCCUPANCY SENSOR
SQUARE AIR RETURN		AV	AUDIO/VOICE ALARM
UNIT HEATER-CEILING MTD.		SD	SMOKE DETECTOR
2 x 4 LIGHT			EXIT SIGN
STRIP LIGHT			CEILING FAN
PENDANT LIGHT			
SURFACE MOUNTED PENDANT		WAP	WIRELESS APPLICATION POINT (BY OWNER)
WALL MOUNT SCONCE		C	CAMERA (BY OWNER), GC PROVIDE SINGEL CAT6 & SINGLE GANG BOX
RECESSED WALL WASHER			
RECESSED DOWNLIGHT			
OPEN CEILING LIGHT			SPEAKER CEILING MTD (BY OWNER)

GENERAL NOTES

A. ACT SPECS ON SHEET A201

B. GYP BD CEILING DETAIL, SEE E1/A202

C. REFER TO ADDITIONAL CEILING NOTES ON SHEET G111

D. ALL HVAC SLOT DIFFUSERS TO BE PRIMED, PAINTED TO MATCH ADJACENT CEILING

E. PROVIDE SOUND BATTS ABOVE CEILING OF ALL PUBLIC RESTROOMS

F. CHANDELIER SUPPORT DETAIL, D1/A201A

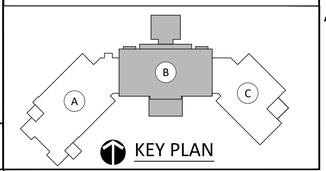

KEY PLAN

KUO DIEDRICH CHI
730 PEACHTREE STREET, NE
STUDIO 325
ATLANTA, GEORGIA 30308
678.244.6270
www.KDCarchitects.com

ARCHITECT:

ARCH. REG: AR91344

CONSULTANT:

REVISIONS

DATE:	DESCRIPTION:
10/18/24	SCHEMATIC DESIGN
6/5/25	DESIGN DEVELOPMENT
10/23/25	50% CONSTRUCTION DOCS
11/14/25	PERMIT SET

PROJECT:

SERENITY SEASIDE RESORT

BUILDING #1

THE INN

186 SOUTH BAY SHORE DRIVE, EASTPOINT, FL 32328

Serenity Seaside Operations, LLC
174 Watercolor Way, PMB 410
Santa Rosa Beach, Florida 32459

JOB NUMBER: 23019.1

DATE: --/--/----

TITLE: RCP: LEVEL 100 - "PLAN B"

SHEET: A201B

K:\Projects\23\23019\DWGs\Serenity_Bldg-1_Inn\Sheets\23019.1-A201B.dwg Plotted: Nov 13, 2025 - 6:14pm by ColebLawrence

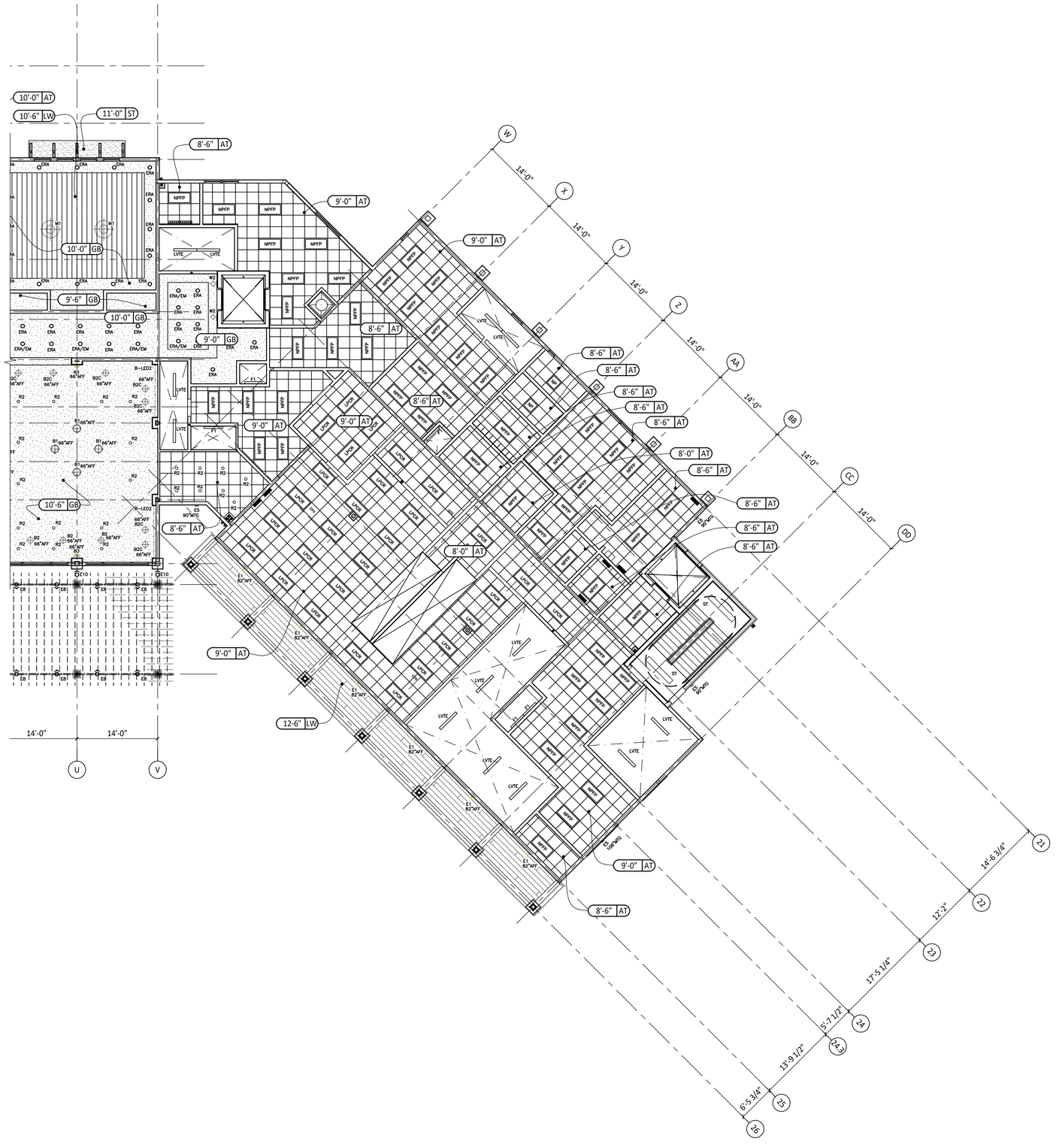

SHEET NOTES / LEGEND

1. -

LEGEND

[at] ACOUSTIC CLG TILE : 24" x 24"		[gb] GYP. BD.	
[lw] LINEAR WOOD CEILING W/ FABRIC		[wc] WOOD CEILING	
[ef] EIFS CEILING		[st] STUCOO CEILING	
REFER TO BEDROOM UNITS FOR CLG INFO THIS AREA ONLY		[ex] PVC TONGUE AND GROOVE CEILING	
LINEAR AIR SUPPLY		X'-XX" XX	CEILING HT. A.F.F./TYPE
LINEAR AIR RETURN			ACCESS PANEL
SQUARE AIR SUPPLY		OS	OCCUPANCY SENSOR
SQUARE AIR RETURN		AV	AUDIO/VOICE ALARM
UNIT HEATER-CEILING MTD.		SD	SMOKE DETECTOR
2 x 4 LIGHT			EXIT SIGN
STRIP LIGHT			CEILING FAN
PENDANT LIGHT			
SURFACE MOUNTED PENDANT		WAP	WIRELESS APPLICATION POINT (BY OWNER)
WALL MOUNT SCONCE			
RECESSED WALL WASHER		C	CAMERA (BY OWNER). GC PROVIDE SINGEL CAT6 & SINGLE GANG BOX
RECESSED DOWNLIGHT			
OPEN CEILING LIGHT		SP	SPEAKER CEILING MTD (BY OWNER)

GENERAL NOTES

A. ACT SPECS ON SHEET A201

B. GYP BD CEILING DETAIL, SEE E1/A202

C. REFER TO ADDITIONAL CEILING NOTES ON SHEET G111

D. ALL HVAC SLOT DIFFUSERS TO BE PRIMED, PAINTED TO MATCH ADJACENT CEILING

E. PROVIDE SOUND BATTS ABOVE CEILING OF ALL PUBLIC RESTROOMS

F. CHANDELIER SUPPORT DETAIL, D1/A201A

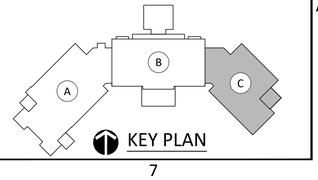

A2	RCP: LEVEL 100 - "PLAN C"
A201C	1/8" = 1'-0"

PROJECT NORTH

KUO DIEDRICH CHI
730 PEACHTREE STREET, NE
STUDIO 325
ATLANTA, GEORGIA 30308
678.244.6270
www.KDCarchitects.com

ARCHITECT:

ARCH. REG: AR91344

CONSULTANT:

REVISIONS

DATE:	DESCRIPTION:
10/18/24	SCHEMATIC DESIGN
6/5/25	DESIGN DEVELOPMENT
10/23/25	50% CONSTRUCTION DOCS
11/14/25	PERMIT SET

PROJECT:

SERENITY SEASIDE RESORT

BUILDING #1

THE INN

186 SOUTH BAY SHORE DRIVE, EASTPOINT, FL 32328

Serenity Seaside Operations, LLC
174 Watercolor Way, PMB 410
Santa Rosa Beach, Florida 32459

JOB NUMBER: 23019.1

DATE: --/--/----

TITLE: RCP: LEVEL 100 - "PLAN C"

SHEET: A201C

K:\Projects\23\23019\DWGs\Serenity_Bldg-1_Inn\Sheets\23019.1-A201C.dwg Plotted: Nov. 13, 2025 - 6:14pm by ColebLawrence

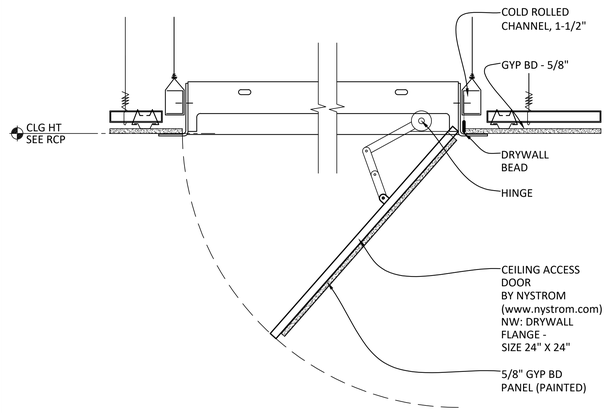

E2	CEILING ACCESS DOOR DETAIL (INTERIOR)
A201	1-1/2" = 1'-0"

NOTES:

ALL WOOD IS STAINED, WESTERN RED CEDAR

NOTES:

1. SEE RCP FOR DIMENSIOINED LAYOUT & QTY
2. EXTERIOR CEILING ACCESS DOOR ARE METAL, PAINTED IN CUSTOM COLOR TO MATCH WOOD CEILING

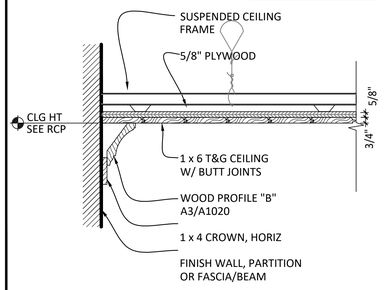

E4	WOOD CEILING DETAIL
A201	1-1/2" = 1'-0"

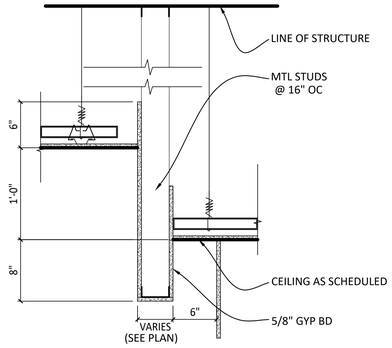

E5	CEILING DETAIL @ RESTROOM WALL
A201	1-1/2" = 1'-0"

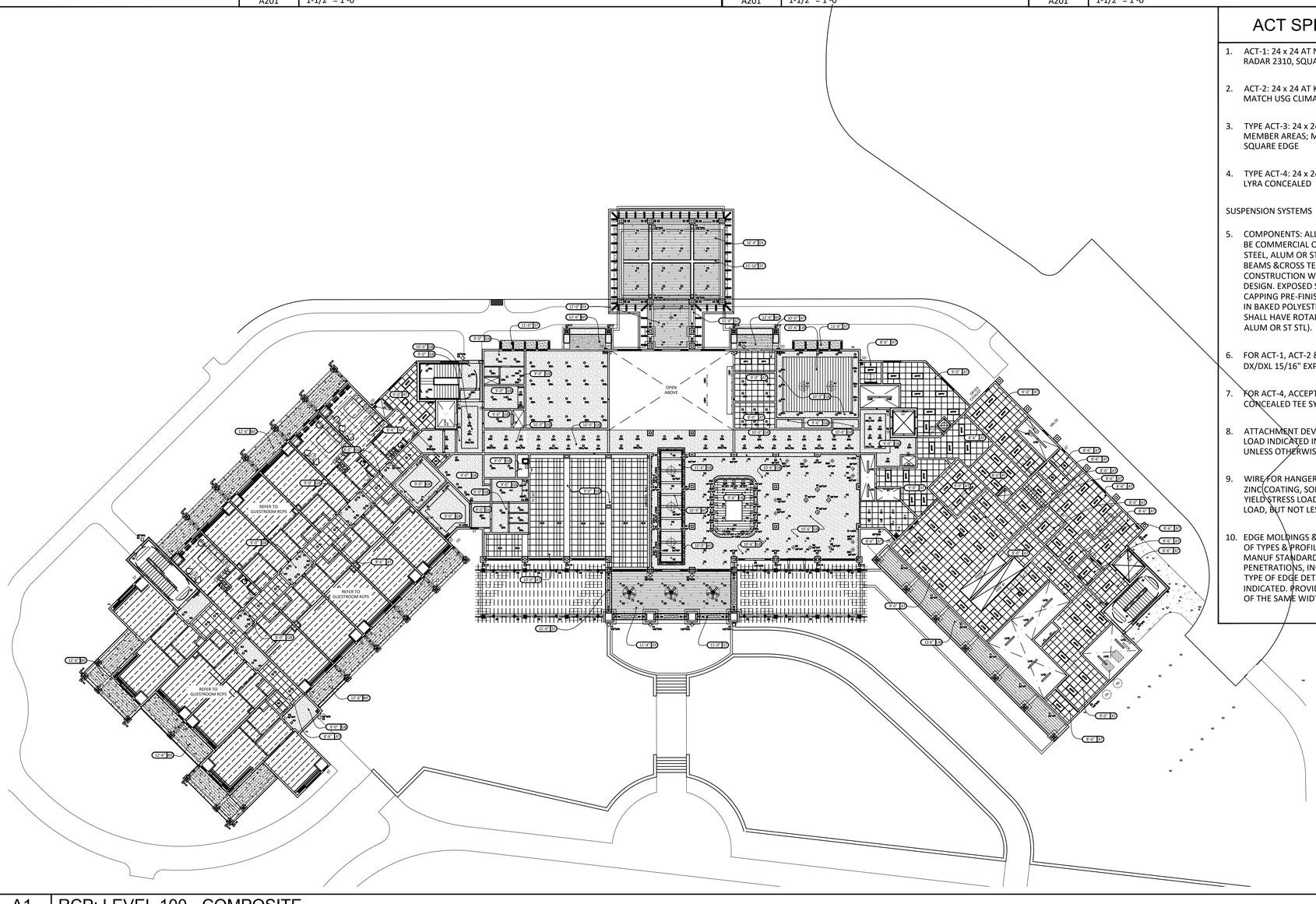

A1	RCP: LEVEL 100 - COMPOSITE
A201	1/16" = 1'-0"

PROJECT NORTH

ACT SPECIFICATIONS

1. ACT-1: 24 x 24 AT NON-MEMBER AREAS; MATCH USG RADAR 2310, SQUARE EDGE
2. ACT-2: 24 x 24 AT KITCHEN VISIBLE TO MEMBER AREAS; MATCH USG CLIMAPLUS VINYL 3260, SQUARE EDGE
3. TYPE ACT-3: 24 x 24 AT KITCHEN NOT VISIBLE BY MEMBER AREAS; MATCH USG CLIMA PLUS VINYL 3270, SQUARE EDGE
4. TYPE ACT-4: 24 x 24 AT MEMBER AREAS; ARMSTRONG LYRA CONCEALED

SUSPENSION SYSTEMS

5. COMPONENTS: ALL MAIN BEAMS & CROSS TEES SHALL BE COMMERCIAL QUALITY HOT-DIPPED GALV (GALV STEEL, ALUM OR ST STL) AS PER ASTM A 653. MAIN BEAMS &CROSS TEES ARE DOUBLE-WEB STEEL CONSTRUCTION WITH 15/16" TYPE EXPOSED FLANGE DESIGN. EXPOSED SURFACES CHEMICALLY CLEANSED, CAPPING PRE-FINISHED GALV STEEL (ALUM OR ST STL) IN BAKED POLYESTER PAINT. MAIN BEAMS & CROSS TEES SHALL HAVE ROTARY STITCHING (EXCEPTION: EXTRUDED ALUM OR ST STL).
6. FOR ACT-1, ACT-2 & ACT-3, ACCEPTABLE PRODUCT: USG DX/DXL 15/16" EXPOSED TEE
7. FOR ACT-4, ACCEPTABLE PRODUCT: PRELUDE CONCEALED TEE SYSTEM (IN COLOR TO MATCH TILE)
8. ATTACHMENT DEVICES: SIZE FOR FIVE TIMES DESIGN LOAD INDICATED IN ASTM C 635, TABLE 1, DIRECT HUNG UNLESS OTHERWISE INDICATED.
9. WIRE FOR HANGERS AND TIES: ASTM A 641, CLASS 1 ZINC COATING, SOFT TEMPER, PRE-STRETCHED, w/ A YIELD STRESS LOAD OF AT LEAST TIME THREE DESIGN LOAD, BUT NOT LESS THAN 12 GAUGE.
10. EDGE MOLDINGS & TRIM: METAL OR EXTRUDED ALUM OF TYPES & PROFILES INDICATED OR, IF NOT INDICATED, MANUF STANDARD MOLDINGS FOR EDGES & PENETRATIONS, INCLUDING LIGHT FIXTURES, THAT FIT TYPE OF EDGE DETAIL & SUSPENSION SYSTEM INDICATED. PROVIDE MOLDINGS W/ EXPOSED FLANGE OF THE SAME WIDTH AS EXPOSED RUNNER.

SHEET NOTES / LEGEND

1. LINEAR WOOD CEILING W/FABRIC, E3/A202
2. PVC CEILING, E5/A202
3. WOOD CEILING (T&G), E5/A201
4. CEILING ACCESS PANEL, E1/A201 - SEE MEP FOR LOCATIONS

LEGEND

[at] ACOUSTIC CLG TILE : 24" x 24"		[gb] GYP. BD.	
[lw] LINEAR WOOD CEILING W/ FABRIC		[wc] WOOD CEILING	
[ef] EIFS CEILING		[st] STUCOO CEILING	
REFER TO BEDROOM UNITS FOR CLG INFO THIS AREA ONLY		[ex] PVC TONGUE AND GROOVE CEILING	
LINEAR AIR SUPPLY	x'-xx" xx	CEILING HT. A.F.F./TYPE	
LINEAR AIR RETURN		ACCESS PANEL	
SQUARE AIR SUPPLY	OS	OCCUPANCY SENSOR	
SQUARE AIR RETURN	AV	AUDIO/VOICE ALARM	
UNIT HEATER-CEILING MTD.		SMOKE DETECTOR	
2 x 4 LIGHT		EXIT SIGN	
STRIP LIGHT		CEILING FAN	
PENDANT LIGHT			
SURFACE MOUNTED PENDANT	WAP	WIRELESS APPLICATION POINT (BY OWNER)	
WALL MOUNT SCONCE		CAMERA (BY OWNER), GC PROVIDE SINGEL CAT6 & SINGLE GANG BOX	
RECESSED WALL WASHER	C		
RECESSED DOWNLIGHT			
OPEN CEILING LIGHT		SPEAKER CEILING MTD (BY OWNER)	

GENERAL NOTES

A. ACT SPECS ON SHEET A201

B. GYP BD CEILING DETAIL, SEE E1/A202

C. REFER TO ADDITIONAL CEILING NOTES ON SHEET G111

D. ALL HVAC SLOT DIFFUSERS TO BE PRIMED, PAINTED TO MATCH ADJACENT CEILING

E. PROVIDE SOUND BATTS ABOVE CEILING OF ALL PUBLIC RESTROOMS

F. CHANDELIER SUPPORT DETAIL, D1/A201A

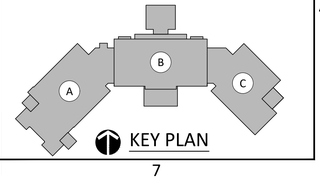

KEY PLAN

KUO DIEDRICH CHI
730 PEACHTREE STREET, NE
STUDIO 325
ATLANTA, GEORGIA 30308
678.244.6270
www.KDCarchitects.com

ARCHITECT:

ARCH. REG: AR91344

CONSULTANT:

REVISIONS

DATE:	DESCRIPTION:
10/18/24	SCHEMATIC DESIGN
6/5/25	DESIGN DEVELOPMENT
10/23/25	50% CONSTRUCTION DOCS
11/14/25	PERMIT SET

PROJECT:

SERENITY SEASIDE RESORT

BUILDING #1

THE INN

186 SOUTH BAY SHORE DRIVE, EASTPOINT, FL 32328

Serenity Seaside Operations, LLC
174 Watercolor Way, PMB 410
Santa Rosa Beach, Florida 32459

JOB NUMBER: 23019.1

DATE: --/--/----

TITLE: RCP: LEVEL 100 - COMPOSITE

SHEET: A201

K:\Projects\23\23019\DWGs\Serenity_Bldg-1_Inn\Sheets\23019.1-A201.dwg Plotted: Nov 13, 2025 - 6:13pm by CoteBLawrence

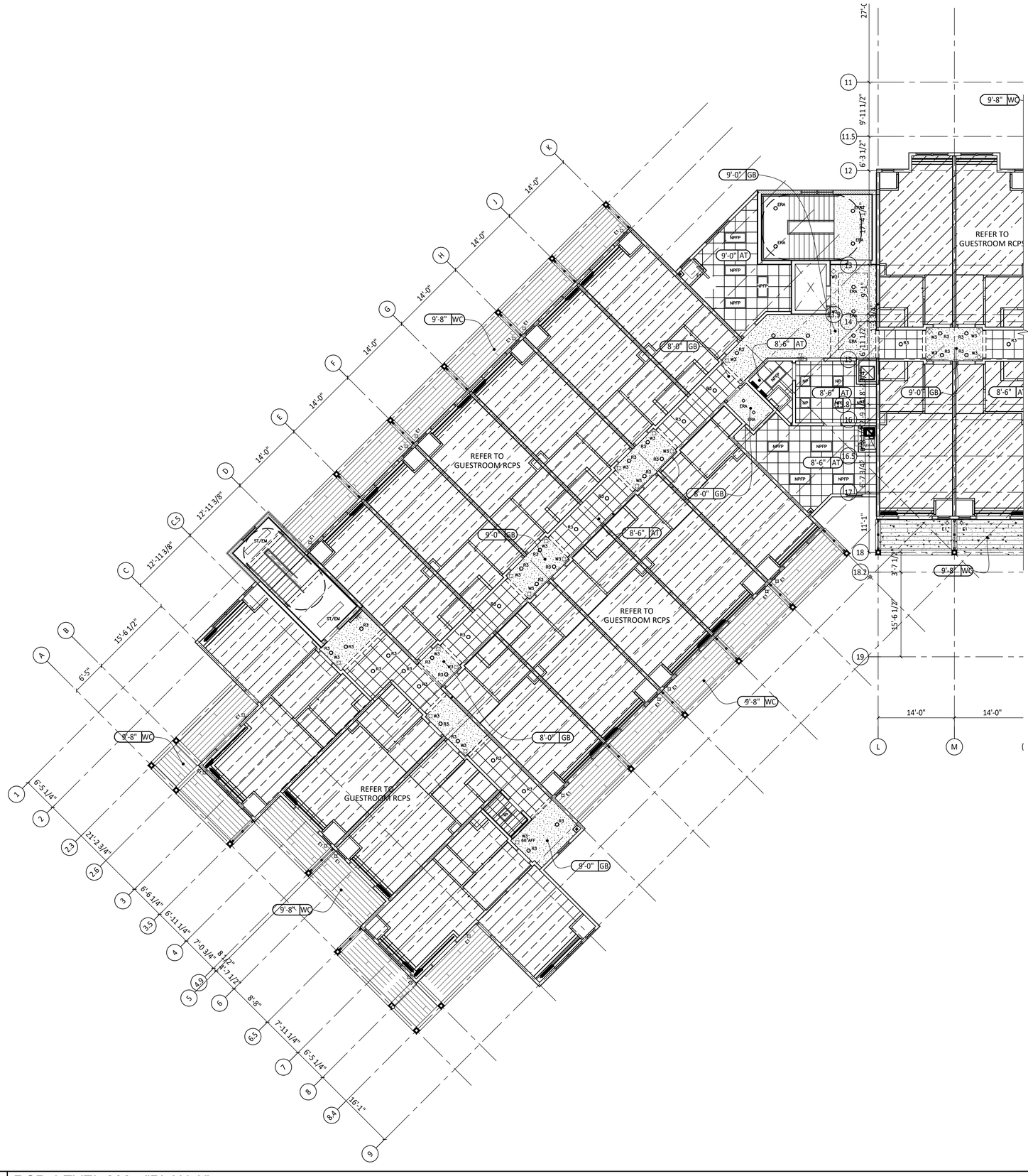

SHEET NOTES / LEGEND

1. -

LEGEND

[at] ACOUSTIC CLG TILE : 24" x 24"		[gb] GYP. BD.	
[lw] LINEAR WOOD CEILING W/ FABRIC		[wc] WOOD CEILING	
[ef] EIFS CEILING		[st] STUCOO CEILING	
REFER TO BEDROOM UNITS FOR CLG INFO THIS AREA ONLY		[ex] PVC TONGUE AND GROOVE CEILING	
LINEAR AIR SUPPLY		X'-XX" XX	CEILING HT. A.F.F./TYPE
LINEAR AIR RETURN			ACCESS PANEL
SQUARE AIR SUPPLY		OS	OCCUPANCY SENSOR
SQUARE AIR RETURN		AV	AUDIO/VOICE ALARM
UNIT HEATER-CEILING MTD.		SD	SMOKE DETECTOR
2 x 4 LIGHT			EXIT SIGN
STRIP LIGHT			CEILING FAN
PENDANT LIGHT			
SURFACE MOUNTED PENDANT		WAP	WIRELESS APPLICATION POINT (BY OWNER)
WALL MOUNT SCONCE			CAMERA (BY OWNER), GC PROVIDE SINGEL CAT6 & SINGLE GANG BOX
RECESSED WALL WASHER		C	
RECESSED DOWNLIGHT			
OPEN CEILING LIGHT		SP	SPEAKER CEILING MTD (BY OWNER)

GENERAL NOTES

A. ACT SPECS ON SHEET A201

B. GYP BD CEILING DETAIL, SEE E1/A202

C. REFER TO ADDITIONAL CEILING NOTES ON SHEET G111

D. ALL HVAC SLOT DIFFUSERS TO BE PRIMED, PAINTED TO MATCH ADJACENT CEILING

E. PROVIDE SOUND BATTS ABOVE CEILING OF ALL PUBLIC RESTROOMS

F. CHANDELIER SUPPORT DETAIL, D1/A201A

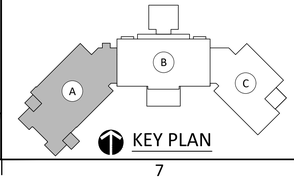

KEY PLAN

A2	RCP: LEVEL 200 - "PLAN A"
A202A	1/8" = 1'-0"

PROJECT NORTH

KUO DIEDRICH CHI
730 PEACHTREE STREET, NE
STUDIO 325
ATLANTA, GEORGIA 30308
678.244.6270
www.KDCarchitects.com

ARCHITECT:

ARCH. REG: AR91344

CONSULTANT:

REVISIONS

DATE:	DESCRIPTION:
10/18/24	SCHEMATIC DESIGN
6/5/25	DESIGN DEVELOPMENT
10/23/25	50% CONSTRUCTION DOCS
11/14/25	PERMIT SET

PROJECT:

SERENITY SEASIDE RESORT

BUILDING #1

THE INN

186 SOUTH BAY SHORE DRIVE, EASTPOINT, FL 32328

Serenity Seaside Operations, LLC
174 Watercolor Way, PMB 410
Santa Rosa Beach, Florida 32459

JOB NUMBER: 23019.1

DATE: --/--/----

TITLE: RCP: LEVEL 200 - "PLAN A"

SHEET: A202A

K:\Projects\23\23019\DWGs\Serenity_Bldg-1_Inn\Sheets\23019.1-A202A.dwg Plotted: Nov 13, 2025 - 6:14pm by CalebLawrence

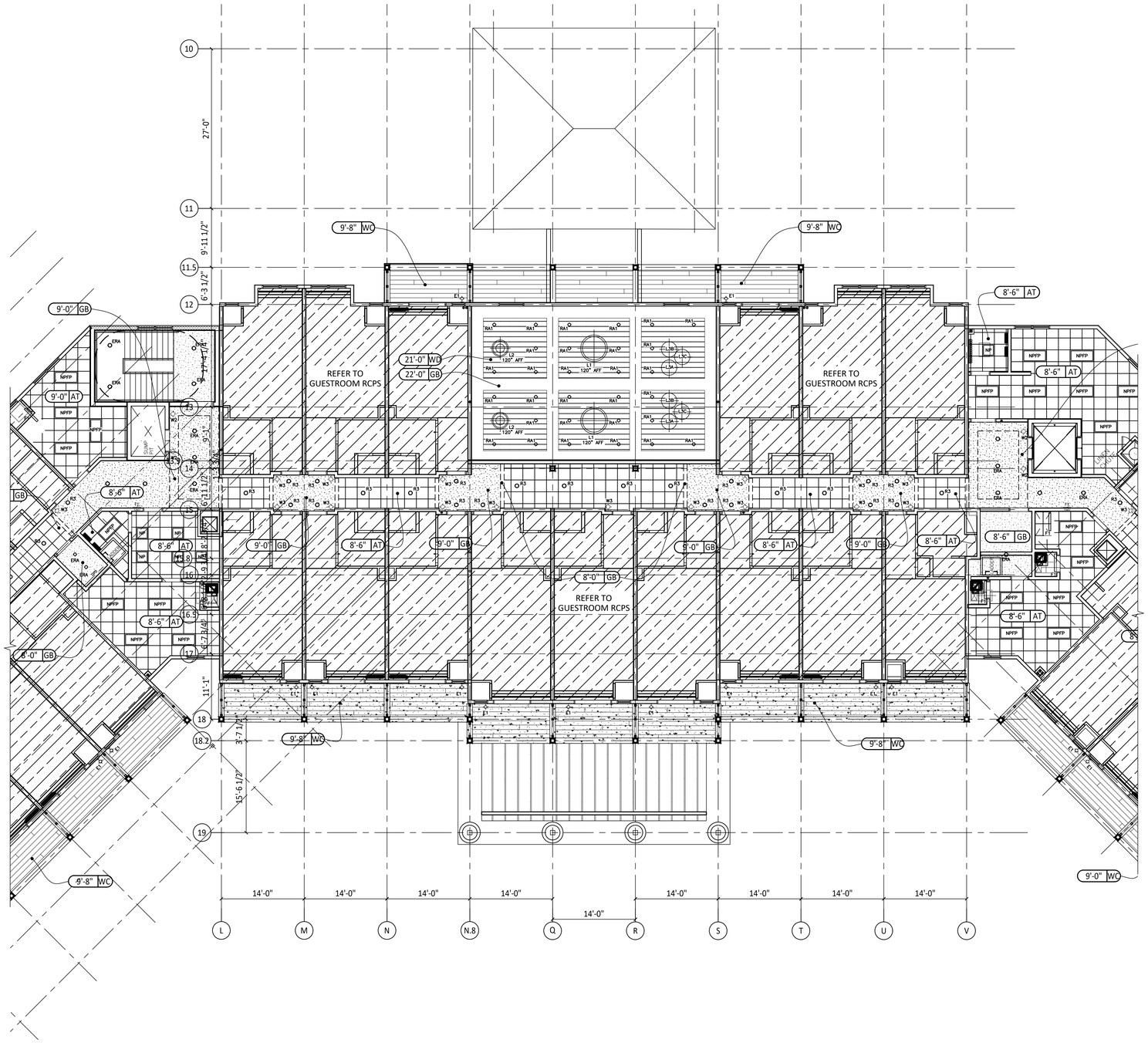

A2	RCP: LEVEL 200 - PLAN B
A202B	1/8" = 1'-0"

PROJECT NORTH

SHEET NOTES / LEGEND

1. -

LEGEND

[at] ACOUSTIC CLG TILE : 24" x 24"	[gb] GYP. BD.
[lw] LINEAR WOOD CEILING W/ FABRIC	[wc] WOOD CEILING
[ef] EIFS CEILING	[st] STUCOO CEILING
REFER TO BEDROOM UNITS FOR CLG INFO THIS AREA ONLY	[ex] PVC TONGUE AND GROOVE CEILING
LINEAR AIR SUPPLY	X'-XX" XX CEILING HT. A.F.F./TYPE
LINEAR AIR RETURN	ACCESS PANEL
SQUARE AIR SUPPLY	OCCUPANCY SENSOR
SQUARE AIR RETURN	AUDIO/VOICE ALARM
UNIT HEATER-CEILING MTD.	SMOKE DETECTOR
2 x 4 LIGHT	EXIT SIGN
STRIP LIGHT	CEILING FAN
PENDANT LIGHT	
SURFACE MOUNTED PENDANT	WAP WIRELESS APPLICATION POINT (BY OWNER)
WALL MOUNT SCONCE	CAMERA (BY OWNER), GC PROVIDE SINGEL CAT6 & SINGLE GANG BOX
RECESSED WALL WASHER	
RECESSED DOWNLIGHT	SPEAKER CEILING MTD (BY OWNER)
OPEN CEILING LIGHT	

GENERAL NOTES

A. ACT SPECS ON SHEET A201

B. GYP BD CEILING DETAIL, SEE E1/A202

C. REFER TO ADDITIONAL CEILING NOTES ON SHEET G111

D. ALL HVAC SLOT DIFFUSERS TO BE PRIMED, PAINTED TO MATCH ADJACENT CEILING

E. PROVIDE SOUND BATTS ABOVE CEILING OF ALL PUBLIC RESTROOMS

F. CHANDELIER SUPPORT DETAIL, D1/A201A

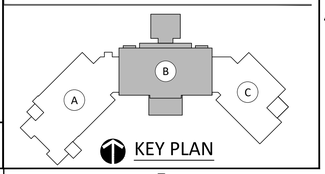

KEY PLAN

KUO DIEDRICH CHI
730 PEACHTREE STREET, NE
STUDIO 325
ATLANTA, GEORGIA 30308
678.244.6270
www.KDCarchitects.com

ARCHITECT:

ARCH. REG: AR91344

CONSULTANT:

REVISIONS

DATE:	DESCRIPTION:
10/18/24	SCHEMATIC DESIGN
6/5/25	DESIGN DEVELOPMENT
10/23/25	50% CONSTRUCTION DOCS
11/14/25	PERMIT SET

PROJECT:

SERENITY SEASIDE RESORT

BUILDING #1

THE INN

186 SOUTH BAY SHORE DRIVE, EASTPOINT, FL 32328

Serenity Seaside Operations, LLC
174 Watercolor Way, PMB 410
Santa Rosa Beach, Florida 32459

JOB NUMBER: 23019.1

DATE: --/--/----

TITLE: RCP: LEVEL 200 - PLAN B

SHEET: A202B

K:\Projects\23\23019\DWGs\Serenity_Bldg-1_Inn\Sheets\23019.1-A202B.dwg Plotted: Nov 13, 2025 - 6:15pm by ColeBlawrence

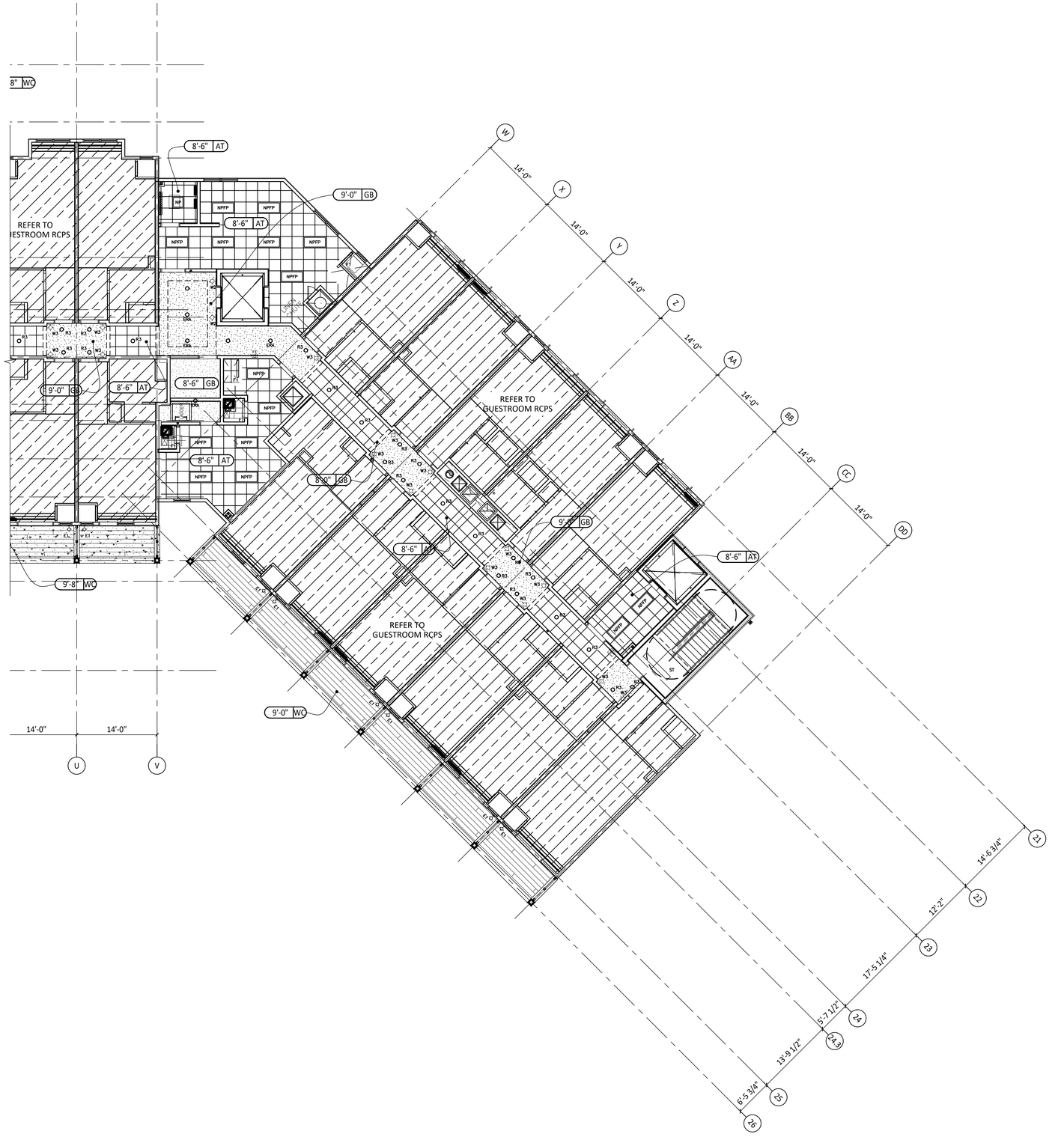

SHEET NOTES / LEGEND

1. -

LEGEND

[at] ACOUSTIC CLG TILE : 24" x 24"		[gb] GYP. BD.	
[lw] LINEAR WOOD CEILING W/ FABRIC		[wc] WOOD CEILING	
[ef] EIFS CEILING		[st] STUCOO CEILING	
REFER TO BEDROOM UNITS FOR CLG INFO THIS AREA ONLY		[ex] PVC TONGUE AND GROOVE CEILING	
LINEAR AIR SUPPLY		x'-xx" xx	CEILING HT. A.F.F./TYPE
LINEAR AIR RETURN			ACCESS PANEL
SQUARE AIR SUPPLY		OS	OCCUPANCY SENSOR
SQUARE AIR RETURN		AV	AUDIO/VOICE ALARM
UNIT HEATER-CEILING MTD.		SD	SMOKE DETECTOR
2 x 4 LIGHT			EXIT SIGN
STRIP LIGHT			CEILING FAN
PENDANT LIGHT			
SURFACE MOUNTED PENDANT		WAP	WIRELESS APPLICATION POINT (BY OWNER)
WALL MOUNT SCONCE			
RECESSED WALL WASHER		C	CAMERA (BY OWNER), GC PROVIDE SINGEL CAT6 & SINGLE GANG BOX
RECESSED DOWNLIGHT			
OPEN CEILING LIGHT		SP	SPEAKER CEILING MTD (BY OWNER)

GENERAL NOTES

A. ACT SPECS ON SHEET A201

B. GYP BD CEILING DETAIL, SEE E1/A202

C. REFER TO ADDITIONAL CEILING NOTES ON SHEET G111

D. ALL HVAC SLOT DIFFUSERS TO BE PRIMED, PAINTED TO MATCH ADJACENT CEILING

E. PROVIDE SOUND BATTS ABOVE CEILING OF ALL PUBLIC RESTROOMS

F. CHANDELIER SUPPORT DETAIL, D1/A201A

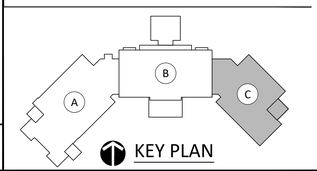

KEY PLAN

KUO DIEDRICH CHI
730 PEACHTREE STREET, NE
STUDIO 325
ATLANTA, GEORGIA 30308
678.244.6270
www.KDCarchitects.com

ARCHITECT:

ARCH. REG: AR91344

CONSULTANT:

REVISIONS

DATE:	DESCRIPTION:
10/18/24	SCHEMATIC DESIGN
6/5/25	DESIGN DEVELOPMENT
10/23/25	50% CONSTRUCTION DOCS
11/14/25	PERMIT SET

PROJECT:

SERENITY SEASIDE RESORT

BUILDING #1

THE INN

186 SOUTH BAY SHORE DRIVE, EASTPOINT, FL 32328

Serenity Seaside Operations, LLC
174 Watercolor Way, PMB 410
Santa Rosa Beach, Florida 32459

JOB NUMBER: 23019.1

DATE: --/--/----

TITLE: RCP: LEVEL 200 - "PLAN C"

SHEET: A202C

A2 | RCP: LEVEL 200 - PLAN C
A202C | 1/8" = 1'-0"

PROJECT NORTH

K:\Projects\23\23019\DWGs\Serenity_Bldg-1_Inn\Sheets\23019.1-A202C.dwg Plotted: Nov. 13, 2025 - 6:15pm by ColebLawrence

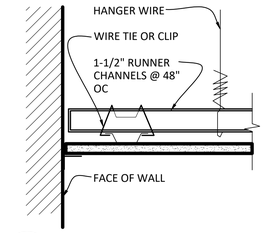

1 SECTION
AT WALL

GYP BD CEILING SUSPENSION NOTES:

1. AREAS SMALLER THAN 144 SQ FT AND WITH WALLS ON FOUR SIDES EXTENDING TO STRUCTURE NEED NOT BRACED
2. BOUNDARY WALLS MUST BE BRACED BOTH TOP AND BOTTOM INDEPENDENT OF CEILING TO QUALIFY

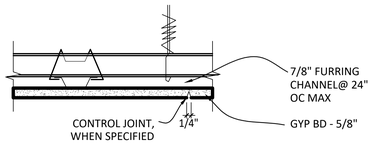

2 SECTION
GYP BD CEILING

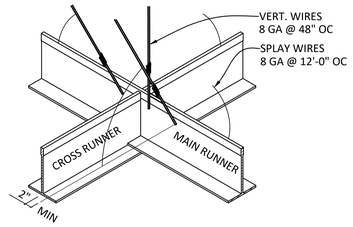

3 ISOMETRIC
GYP BD CEILING

E1	DETAILS @ SUSPENDED GYP BD
A202	3" = 1'-0"

FELT FABRIC SPECIFICATION:

MANUF:	ROSE BRAND, 800-223-1624
PRODUCT:	BLACK RANG CLOTH LINING FR
COLOR/FINISH:	BLACK
SIZE/DIMENSIONS:	54"
WEIGHT:	.67 POUNDS PER LINEAR YARD
CONTENT:	100% COTTON

NOTE:

1. WOOD SPECIES WHERE PAINTED - POPLAR
2. WOOD SPECIES WHERE STAINED - PINE
3. THIS DETAIL IS CUSTOM FABRICATED & INSTALLED BY GC

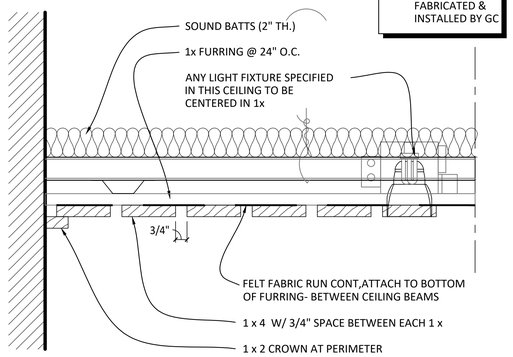

E3	SECT @ LINEAR WD CEILING - TYPE "B"
A202	3" = 1'-0"

NOTES:

MANUF: AZEK BUILDING PRODUCTS

MODEL: AM1006216WPN

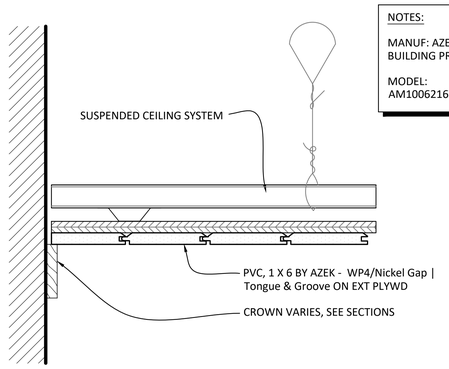

E5	SECT @ PVC (AZEK) EXT CEILING
A202	3" = 1'-0"

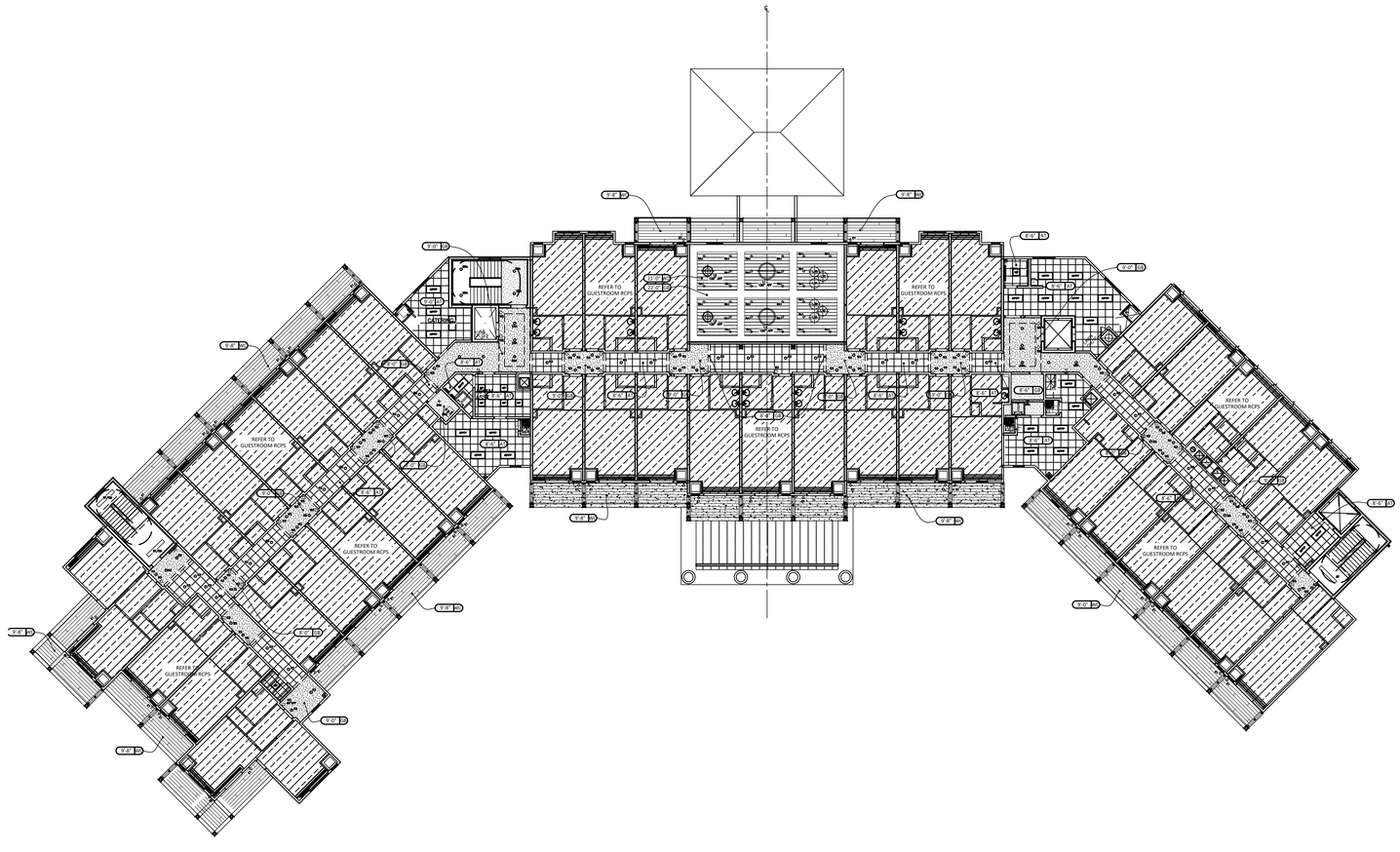

A1	RCP: LEVEL 200 - COMPOSITE
A202	1/8" = 1'-0"

SHEET NOTES / LEGEND

1. -

LEGEND

[at] ACOUSTIC CLG TILE : 24" x 24"	[gb] GYP. BD.
[lw] LINEAR WOOD CEILING W/ FABRIC	[wc] WOOD CEILING
[ef] EIFS CEILING	[st] STUCOO CEILING
REFER TO BEDROOM UNITS FOR CLG INFO THIS AREA ONLY	[ex] PVC TONGUE AND GROOVE CEILING

	LINEAR AIR SUPPLY	X'-XX" XX	CEILING HT. A.F.F./TYPE
	LINEAR AIR RETURN		ACCESS PANEL
	SQUARE AIR SUPPLY	OS	OCCUPANCY SENSOR
	SQUARE AIR RETURN	AV	AUDIO/VOICE ALARM
	UNIT HEATER-CEILING MTD.	SD	SMOKE DETECTOR
	2 x 4 LIGHT		EXIT SIGN
	STRIP LIGHT		CEILING FAN
	PENDANT LIGHT		
	SURFACE MOUNTED PENDANT	WAP	WIRELESS APPLICATION POINT (BY OWNER)
	WALL MOUNT SCONCE		CAMERA (BY OWNER), GC PROVIDE SINGEL CAT6 & SINGLE GANG BOX
	RECESSED WALL WASHER	C	
	RECESSED DOWNLIGHT		
	OPEN CEILING LIGHT	SP	SPEAKER CEILING MTD (BY OWNER)

GENERAL NOTES

A. ACT SPECS ON SHEET A201

B. GYP BD CEILING DETAIL, SEE E1/A202

C. REFER TO ADDITIONAL CEILING NOTES ON SHEET G111

D. ALL HVAC SLOT DIFFUSERS TO BE PRIMED, PAINTED TO MATCH ADJACENT CEILING

E. PROVIDE SOUND BATTS ABOVE CEILING OF ALL PUBLIC RESTROOMS

F. CHANDELIER SUPPORT DETAIL, D1/A201A

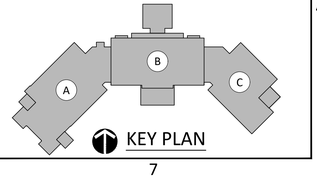

KEY PLAN

KUO DIEDRICH CHI
730 PEACHTREE STREET, NE
STUDIO 325
ATLANTA, GEORGIA 30308
678.244.6270
www.KDCarchitects.com

ARCHITECT:

ARCH. REG: AR91344

CONSULTANT:

REVISIONS

DATE:	DESCRIPTION:
10/18/24	SCHEMATIC DESIGN
6/5/25	DESIGN DEVELOPMENT
10/23/25	50% CONSTRUCTION DOCS
11/14/25	PERMIT SET

PROJECT:

SERENITY SEASIDE RESORT

BUILDING #1

THE INN

186 SOUTH BAY SHORE DRIVE, EASTPOINT, FL 32328

Serenity Seaside Operations, LLC
174 Watercolor Way, PMB 410
Santa Rosa Beach, Florida 32459

JOB NUMBER: 23019.1

DATE: --/--/----

TITLE: RCP: LEVEL 200 - COMPOSITE

SHEET: A202

K:\Projects\23\23019\DWGs\Serenity_Bldg-1_Inn\Sheets\23019.1-A202.dwg Plotted: Nov 13, 2025 - 6:14pm by ColebLawrence

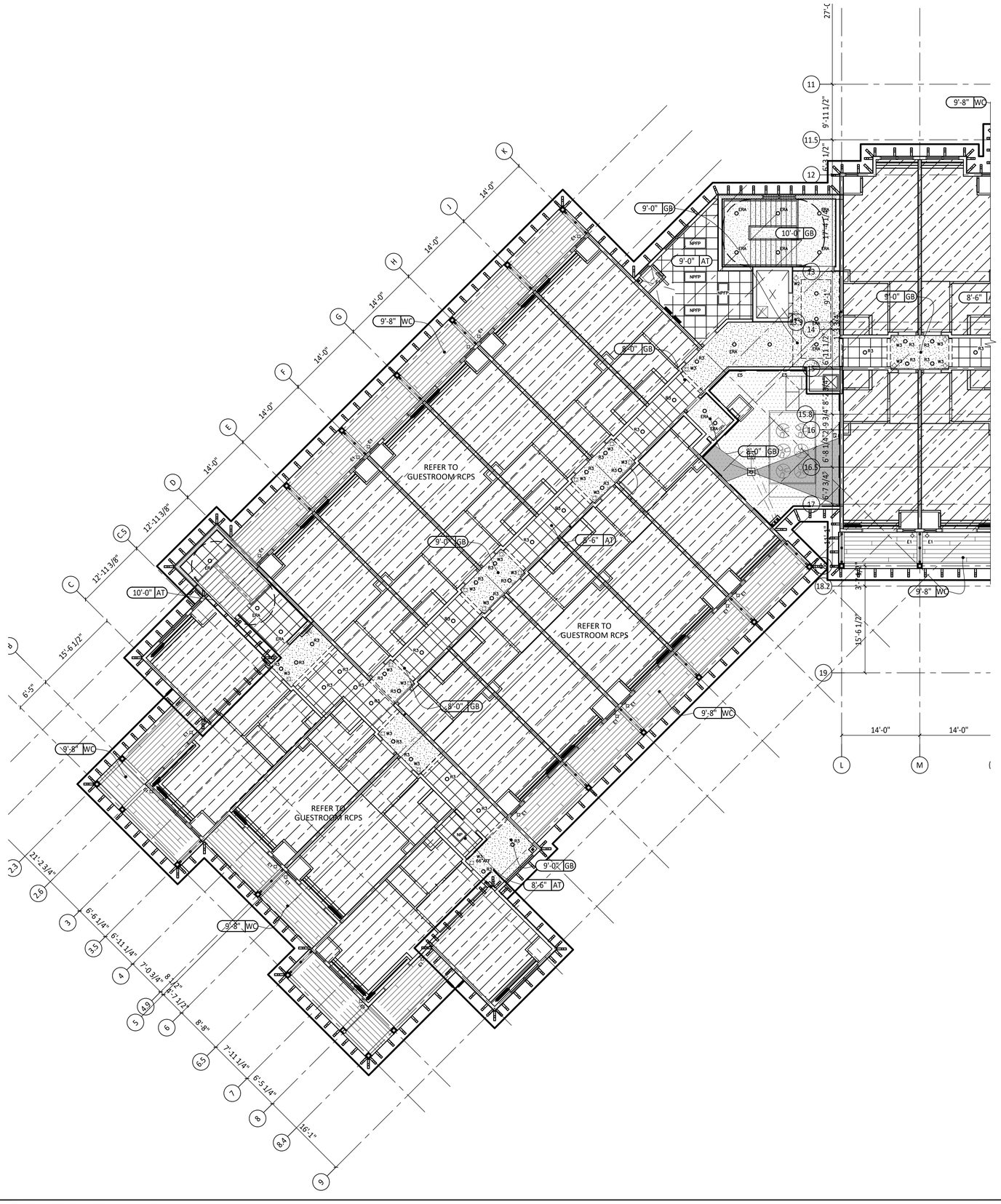

SHEET NOTES / LEGEND

1. -

LEGEND

[at] ACOUSTIC CLG TILE : 24" x 24"		[gb] GYP. BD.	
[lw] LINEAR WOOD CEILING W/ FABRIC		[wc] WOOD CEILING	
[ef] EIFS CEILING		[st] STUCOO CEILING	
REFER TO BEDROOM UNITS FOR CLG INFO THIS AREA ONLY		[ex] PVC TONGUE AND GROOVE CEILING	
LINEAR AIR SUPPLY		x'-xx" xx	CEILING HT. A.F.F./TYPE
LINEAR AIR RETURN			ACCESS PANEL
SQUARE AIR SUPPLY		OS	OCCUPANCY SENSOR
SQUARE AIR RETURN		AV	AUDIO/VOICE ALARM
UNIT HEATER-CEILING MTD.			SMOKE DETECTOR
2 x 4 LIGHT			EXIT SIGN
STRIP LIGHT			CEILING FAN
PENDANT LIGHT			
SURFACE MOUNTED PENDANT		WAP	WIRELESS APPLICATION POINT (BY OWNER)
WALL MOUNT SCONCE			
RECESSED WALL WASHER		C	CAMERA (BY OWNER), GC PROVIDE SINGEL CAT6 & SINGLE GANG BOX
RECESSED DOWNLIGHT			
OPEN CEILING LIGHT		SP	SPEAKER CEILING MTD (BY OWNER)

GENERAL NOTES

A. ACT SPECS ON SHEET A201

B. GYP BD CEILING DETAIL, SEE E1/A202

C. REFER TO ADDITIONAL CEILING NOTES ON SHEET G111

D. ALL HVAC SLOT DIFFUSERS TO BE PRIMED, PAINTED TO MATCH ADJACENT CEILING

E. PROVIDE SOUND BATTS ABOVE CEILING OF ALL PUBLIC RESTROOMS

F. CHANDELIER SUPPORT DETAIL, D1/A201A

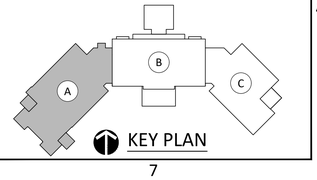

KUO DIEDRICH CHI
730 PEACHTREE STREET, NE
STUDIO 325
ATLANTA, GEORGIA 30308
678.244.6270
www.KDCarchitects.com

ARCHITECT:

ARCH. REG: AR91344

CONSULTANT:

REVISIONS

DATE:	DESCRIPTION:
10/18/24	SCHEMATIC DESIGN
6/5/25	DESIGN DEVELOPMENT
10/23/25	50% CONSTRUCTION DOCS
11/14/25	PERMIT SET

PROJECT:

SERENITY SEASIDE RESORT

BUILDING #1

THE INN

186 SOUTH BAY SHORE DRIVE, EASTPOINT, FL 32328

Serenity Seaside Operations, LLC
174 Watercolor Way, PMB 410
Santa Rosa Beach, Florida 32459

JOB NUMBER: 23019.1

DATE: --/--/----

TITLE: RCP: LEVEL 300 - "PLAN A"

SHEET: A203A

A3 | RCP: LEVEL 300 - "PLAN A"
A203A | 1/8" = 1'-0"

K:\Projects\23\23019\DWGs\Serenity_Bldg-1_Inn\Sheets\23019.1-A203A.dwg Plotted: Nov 13, 2025 - 6:15pm by ColebLawrence

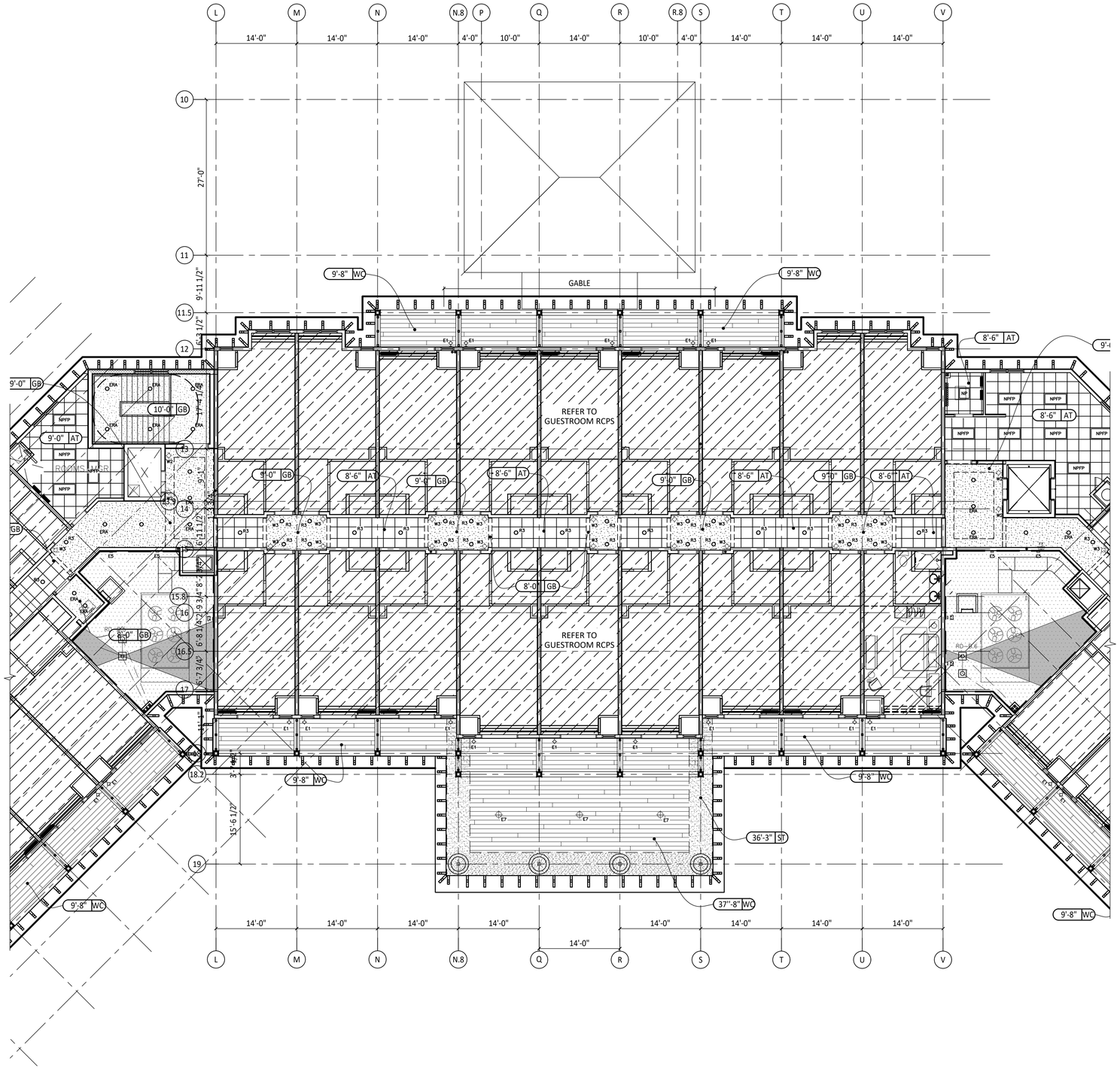

SHEET NOTES / LEGEND

1. -

LEGEND

[at] ACOUSTIC CLG TILE : 24" x 24"		[gb] GYP. BD.	
[lw] LINEAR WOOD CEILING W/ FABRIC		[wc] WOOD CEILING	
[ef] EIFS CEILING		[st] STUCOO CEILING	
REFER TO BEDROOM UNITS FOR CLG INFO THIS AREA ONLY		[ex] PVC TONGUE AND GROOVE CEILING	
	LINEAR AIR SUPPLY	x'-xx" xx	CEILING HT. A.F.F./TYPE
	LINEAR AIR RETURN		ACCESS PANEL
	SQUARE AIR SUPPLY	OS	OCCUPANCY SENSOR
	SQUARE AIR RETURN	AV	AUDIO/VOICE ALARM
	UNIT HEATER-CEILING MTD.	SD	SMOKE DETECTOR
	2 x 4 LIGHT		EXIT SIGN
	STRIP LIGHT		CEILING FAN
	PENDANT LIGHT		
	SURFACE MOUNTED PENDANT	WAP	WIRELESS APPLICATION POINT (BY OWNER)
	WALL MOUNT SCONCE	C	CAMERA (BY OWNER), GC PROVIDE SINGEL CAT6 & SINGLE GANG BOX
	RECESSED WALL WASHER		
	RECESSED DOWNLIGHT	SP	SPEAKER CEILING MTD (BY OWNER)
	OPEN CEILING LIGHT		

GENERAL NOTES

A. ACT SPECS ON SHEET A201

B. GYP BD CEILING DETAIL, SEE E1/A202

C. REFER TO ADDITIONAL CEILING NOTES ON SHEET G111

D. ALL HVAC SLOT DIFFUSERS TO BE PRIMED, PAINTED TO MATCH ADJACENT CEILING

E. PROVIDE SOUND BATTS ABOVE CEILING OF ALL PUBLIC RESTROOMS

F. CHANDELIER SUPPORT DETAIL, D1/A201A

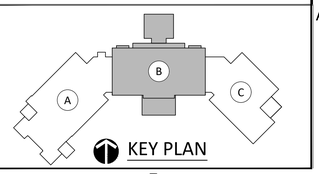

KEY PLAN

A2	RCP: LEVEL 300 - PLAN B
A203B	1/8" = 1'-0"

PROJECT NORTH

KUO DIEDRICH CHI
730 PEACHTREE STREET, NE
STUDIO 325
ATLANTA, GEORGIA 30308
678.244.6270
www.KDCarchitects.com

ARCHITECT:

ARCH. REG: AR91344

CONSULTANT:

REVISIONS

DATE:	DESCRIPTION:
10/18/24	SCHEMATIC DESIGN
6/5/25	DESIGN DEVELOPMENT
10/23/25	50% CONSTRUCTION DOCS
11/14/25	PERMIT SET

PROJECT:

SERENITY SEASIDE RESORT

BUILDING #1

THE INN

186 SOUTH BAY SHORE DRIVE, EASTPOINT, FL 32328

Serenity Seaside Operations, LLC
174 Watercolor Way, PMB 410
Santa Rosa Beach, Florida 32459

JOB NUMBER: 23019.1

DATE: --/--/----

TITLE: RCP: LEVEL 300 - "PLAN B"

SHEET: A203B

K:\Projects\23\23019\DWGs\Serenity_Bldg-1_Inn\Sheets\23019.1-A203B.dwg Plotted: Nov 13, 2025 - 6:15pm by ColeBLawrence

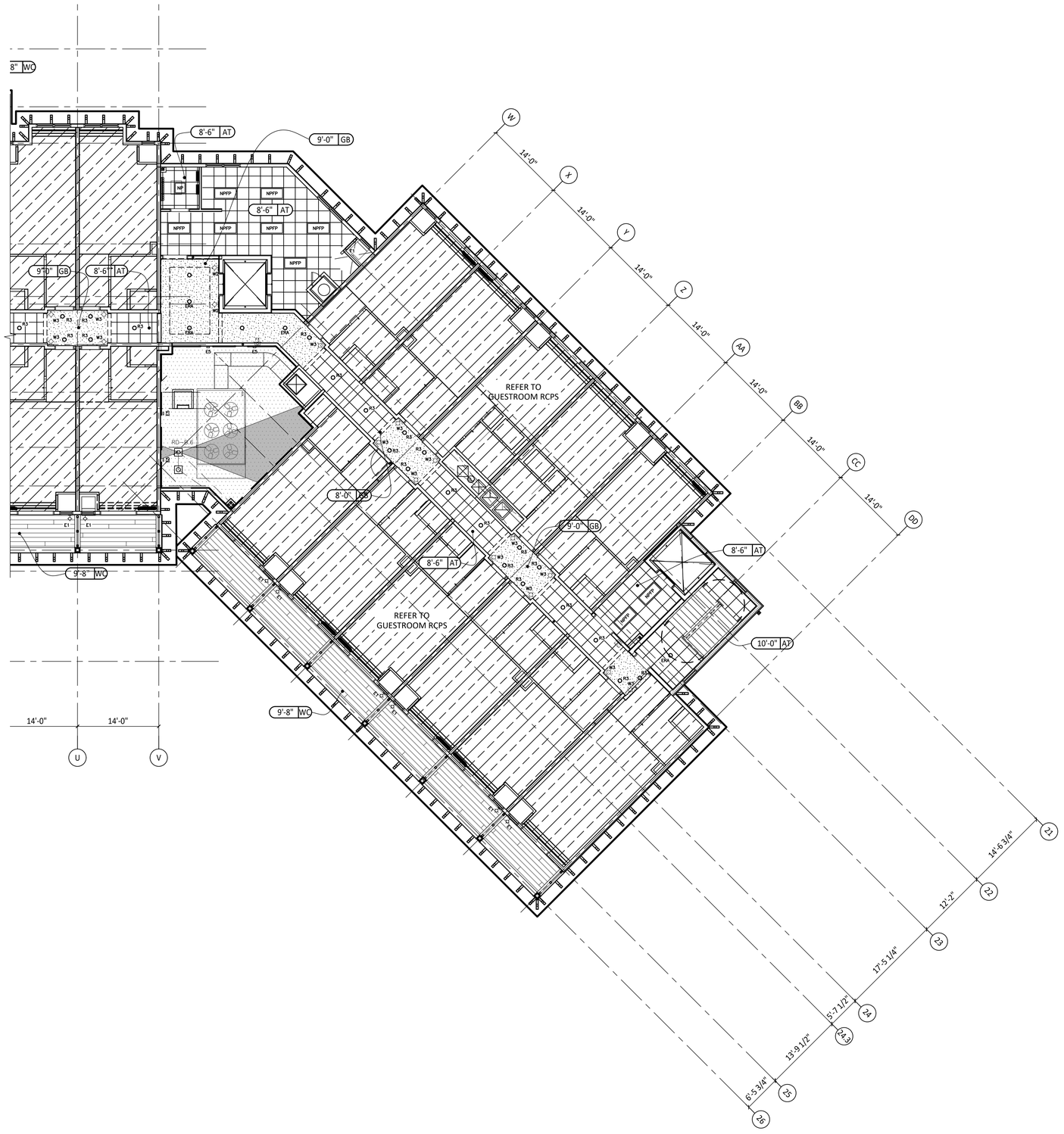

SHEET NOTES / LEGEND

1. -

LEGEND

[at] ACOUSTIC CLG TILE : 24" x 24"		[gb] GYP. BD.	
[lw] LINEAR WOOD CEILING W/ FABRIC		[wc] WOOD CEILING	
[ef] EIFS CEILING		[st] STUCOO CEILING	
REFER TO BEDROOM UNITS FOR CLG INFO THIS AREA ONLY		[ex] PVC TONGUE AND GROOVE CEILING	
LINEAR AIR SUPPLY		x'-xx" xx	CEILING HT. A.F.F./TYPE
LINEAR AIR RETURN			ACCESS PANEL
SQUARE AIR SUPPLY		OS	OCCUPANCY SENSOR
SQUARE AIR RETURN		AV	AUDIO/VOICE ALARM
UNIT HEATER-CEILING MTD.		SD	SMOKE DETECTOR
2 x 4 LIGHT			EXIT SIGN
STRIP LIGHT			CEILING FAN
PENDANT LIGHT			
SURFACE MOUNTED PENDANT		WAP	WIRELESS APPLICATION POINT (BY OWNER)
WALL MOUNT SCONCE			
RECESSED WALL WASHER		C	CAMERA (BY OWNER), GC PROVIDE SINGEL CAT6 & SINGLE GANG BOX
RECESSED DOWNLIGHT			
OPEN CEILING LIGHT		SP	SPEAKER CEILING MTD (BY OWNER)

GENERAL NOTES

A. ACT SPECS ON SHEET A201

B. GYP BD CEILING DETAIL, SEE E1/A202

C. REFER TO ADDITIONAL CEILING NOTES ON SHEET G111

D. ALL HVAC SLOT DIFFUSERS TO BE PRIMED, PAINTED TO MATCH ADJACENT CEILING

E. PROVIDE SOUND BATTS ABOVE CEILING OF ALL PUBLIC RESTROOMS

F. CHANDELIER SUPPORT DETAIL, D1/A201A

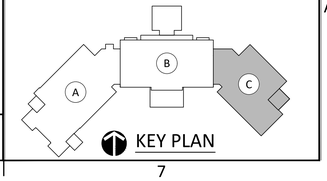

KUO DIEDRICH CHI
730 PEACHTREE STREET, NE
STUDIO 325
ATLANTA, GEORGIA 30308
678.244.6270
www.KDCarchitects.com

ARCHITECT:

ARCH. REG: AR91344

CONSULTANT:

REVISIONS

DATE:	DESCRIPTION:
10/18/24	SCHEMATIC DESIGN
6/5/25	DESIGN DEVELOPMENT
10/23/25	50% CONSTRUCTION DOCS
11/14/25	PERMIT SET

PROJECT:

SERENITY SEASIDE RESORT

BUILDING #1

THE INN

186 SOUTH BAY SHORE DRIVE, EASTPOINT, FL 32328

Serenity Seaside Operations, LLC
174 Watercolor Way, PMB 410
Santa Rosa Beach, Florida 32459

JOB NUMBER: 23019.1

DATE: --/--/----

TITLE: RCP: LEVEL 300 - "PLAN C"

SHEET: A203C

A2 | RCP: LEVEL 300 - "PLAN C"
A203C | 1/8" = 1'-0"

PROJECT NORTH

K:\Projects\23\23019\DWGs\Serenity_Bldg-1_inn\Sheets\23019.1-A203C.dwg Plotted: Nov 13, 2025 - 6:16pm by ColebLowrence

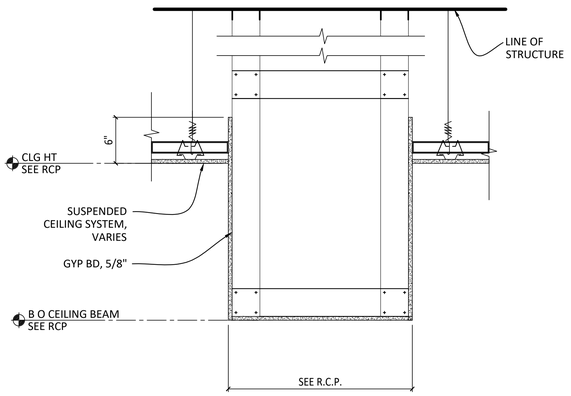

E1	CEILING DETAIL @ BEAM - GYP BD
A203	1-1/2" = 1'-0"

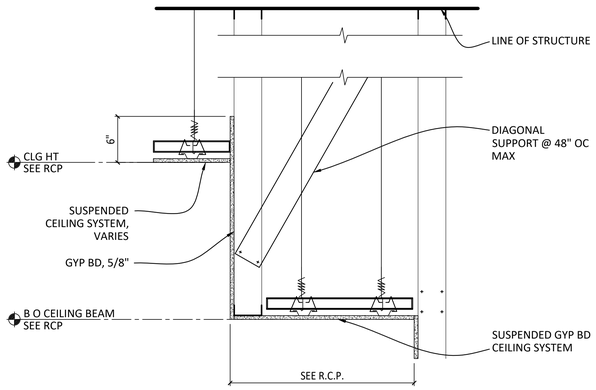

E3	CEILING DETAIL @ HALF BEAM / SOFFIT - GYP BD
A203	1-1/2" = 1'-0"

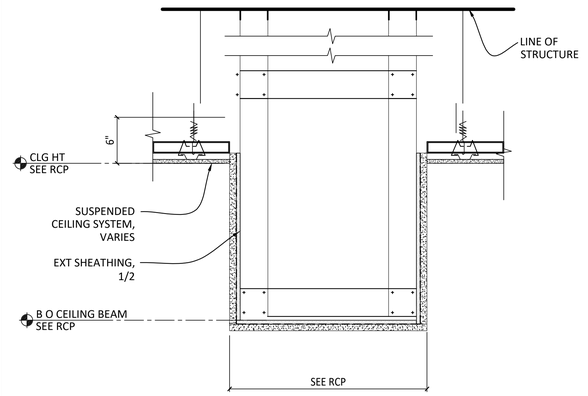

E5	CEILING DETAIL @ BEAM - STUCCO
A203	1-1/2" = 1'-0"

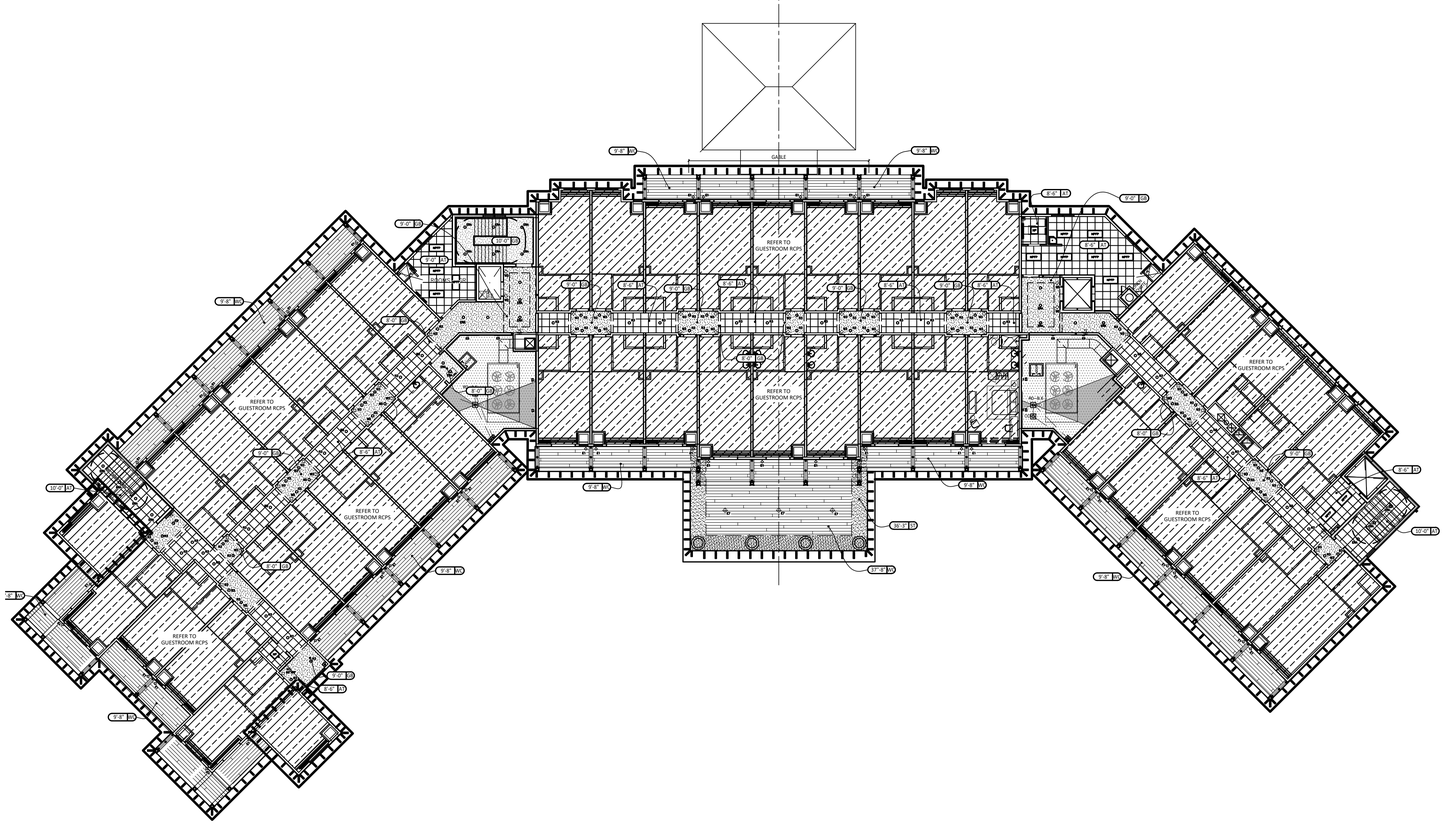
GABLE
REFER TO GUESTROOM RCPS
LOBBY
OPEN TO BELOW
OPEN TO BELOW
OPEN TO BELOW

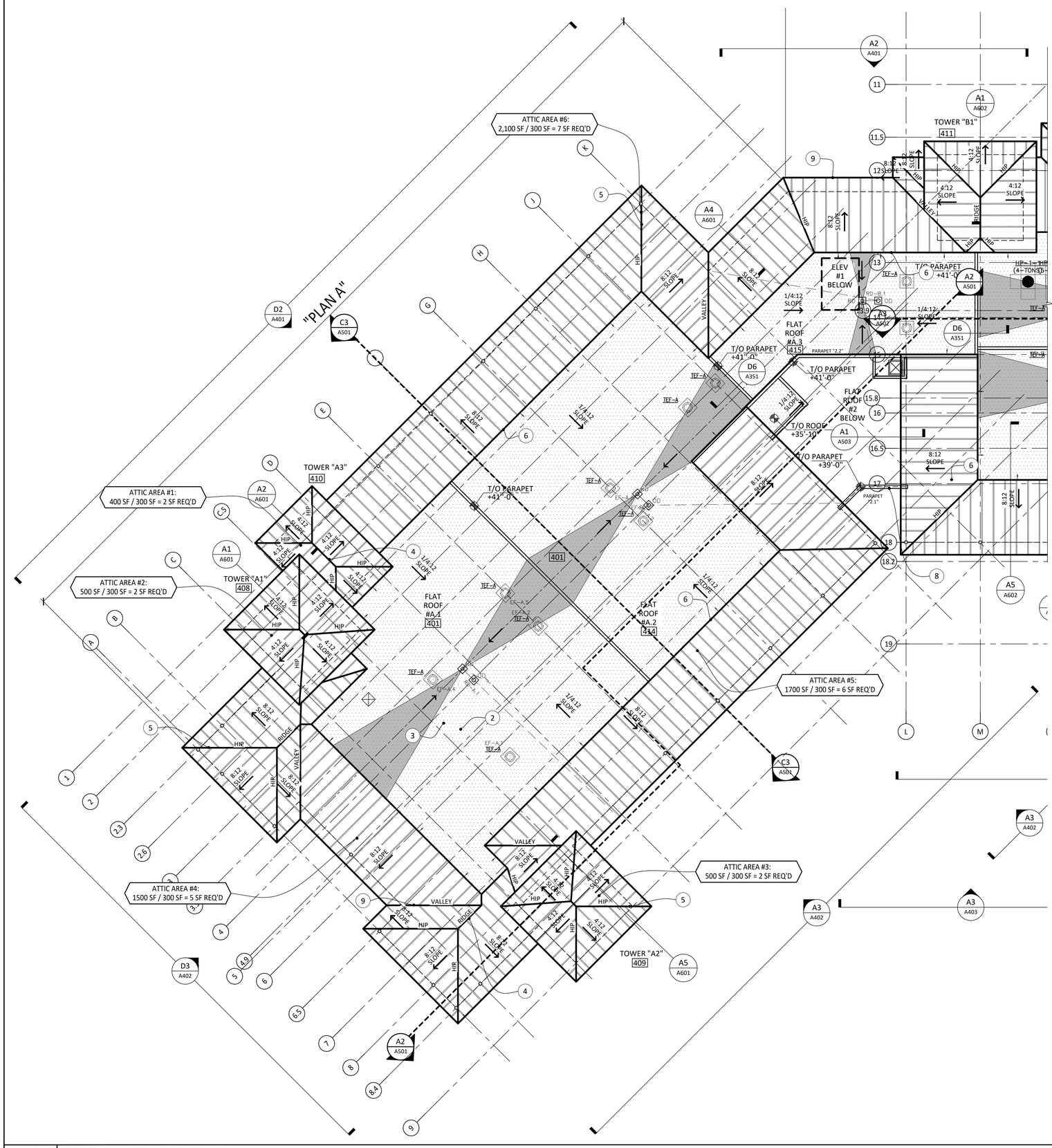

A2	ROOF PLAN - "PLAN A"
A301A	1/8" = 1'-0"

SHEET NOTES / LEGEND

1. ~~GUTTER, ALUM HALF ROUND, A6/A351~~
2. ROOF DRAIN & OVERFLOW DRAIN, D2/A351
3. ROOF DRAIN @ TPO, A6/A371
4. METAL ROOF - VENTING RIDGE, C5/A361
5. METAL ROOF - HIP CAP FLASHING, A2/A361
6. METAL ROOF - RIDGE @ MANSARD
7. TPO WALKPAD, A1/A371 - PROVIDE AROUND ALL HVAC ROOFTOP UNITS
8. ALUM COPING, C2/A371
9. METAL ROOF - VALLEY, A1/A361
10. TOILET EXHAUST FAN ON CURB - SEE MECH
11. MECH EQUIP ON CURB - SEE MECH
12. LAUNDRY CHUTE VENT
13. TPO MEBRANE (WHITE) ROOF ASSEMBLY
14. COMPRESSOR - SEE MECH
15. ROOF HOSE BIBB - SEE PLUMB
16. UNIVERSAL VENT UV-75 BY ACTIVE VENTILATION PRODUCTS: EACH HAS 0.52 SF FREE AREA OF AIR FLOW
17. SOFFIT VENT - HARDIE VENTED TRIM, --- 5 SQ IN PER LF OF AIR FLOW

LEGEND

	METAL ROOF		
	TPO FLAT ROOF	RD	ROOF DRAIN
DS	DOWN-SPOUT	OD	OVER-FLOW DRAIN
	LADDER-WALL MOUNTED		ROOF HATCH
			DIRECTION OF SLOPED ROOF

GENERAL NOTES

A. GC SHALL REFERENCE M.E.P. DRAWINGS FOR ANY ROOF PENETRATIONS NOT GRAPHICALLY INDICATED ON MECHANICAL, ELECTRICAL, & PLUMBING SHALL BE RELAYED TO ARCHITECT PRIOR TO CONSTRUCTION.

B. ALL ROOF PENETRATIONS TO BE PAINTED TO MATCH METAL ROOFING.

C. CONTRACTOR SHALL PROVIDE 1/4" : 12" DRAINAGE TO ALL FLAT ROOF DRAINAGE LOCATIONS.

D. MTL ROOF DETAILS ON SHEET A361

E. FLAT (TPO) ROOF DETAILS ON SHEET A371

F. TIE DOWNSPOUT INTO STORM LINES - SEE CIVIL &- DETAIL B4/A351

G. GC TO PROVIDE ADEQUATE EXHAUST & INTAKE NFVA (NET FREE AREA) AT ALL AREAS AS INDICATED ON THE ROOF PLAN & AS NOTED ON DETAILS. VENTS SHALL BE EQUALLY DISTRIBUTED ALONG SEPARATE ROOF ELEMENTS ALONG THE RIDGE OR HIGH POINT OF ROOF (EXHAUST) & SOFFITS (INTAKE). PROVIDE BIRD SCREEN.

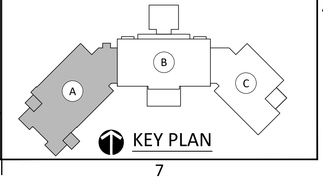

KEY PLAN

KUO DIEDRICH CHI
730 PEACHTREE STREET, NE
STUDIO 325
ATLANTA, GEORGIA 30308
678.244.6270
www.KDCarchitects.com

ARCHITECT:

ARCH. REG: AR91344

CONSULTANT:

REVISIONS

DATE:	DESCRIPTION:
10/18/24	SCHEMATIC DESIGN
6/5/25	DESIGN DEVELOPMENT
10/23/25	50% CONSTRUCTION DOCS
11/14/25	PERMIT SET

PROJECT:

SERENITY SEASIDE RESORT

BUILDING #1

THE INN

186 SOUTH BAY SHORE DRIVE, EASTPOINT, FL 32328

Serenity Seaside Operations, LLC
174 Watercolor Way, PMB 410
Santa Rosa Beach, Florida 32459

JOB NUMBER: 23019.1

DATE: --/--/----

TITLE: ROOF PLAN: "PLAN A"

SHEET: A301A

K:\Projects\23\23019\DWGs\Serenity_Bldg-1_Inn\Sheets\23019.1-A301A.dwg Plotted: Nov 13, 2025 - 6:16pm by CalebLawrence

"PLAN B"

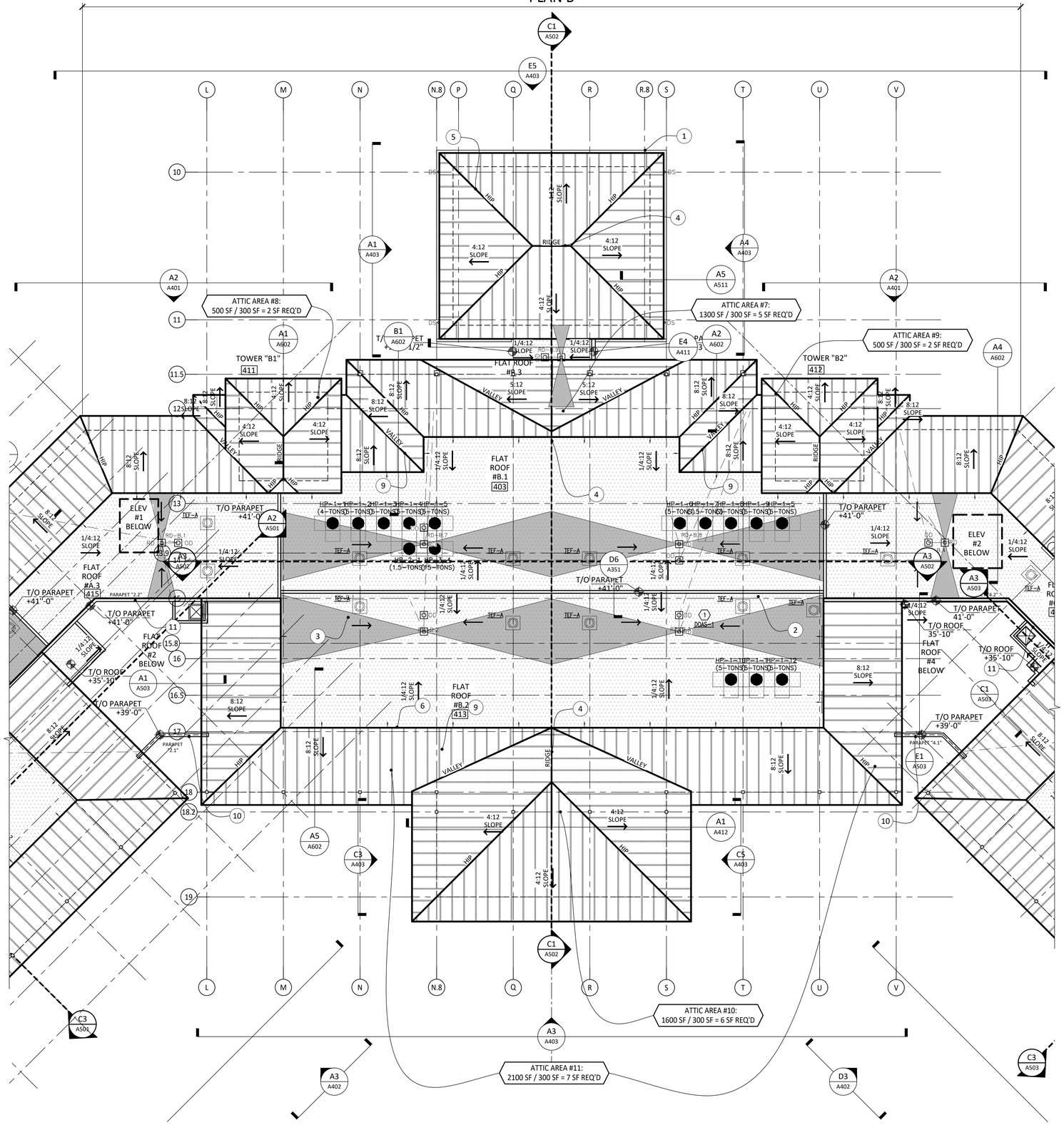

A2	ROOF PLAN - "PLAN B"
A301B	1/8" = 1'-0"

SHEET NOTES / LEGEND

1. ~~GUTTER, ALUM HALF ROUND, A6/A351~~
2. ROOF DRAIN & OVERFLOW DRAIN, D2/A351
3. ROOF DRAIN @ TPO, A6/A371
4. METAL ROOF - VENTING RIDGE, C5/A361
5. METAL ROOF - HIP CAP FLASHING, A2/A361
6. METAL ROOF - RIDGE @ MANSARD
7. TPO WALKPAD, A1/A371 - PROVIDE AROUND ALL HVAC ROOFTOP UNITS
8. ALUM COPING, C2/A371
9. METAL ROOF - VALLEY, A1/A361
10. TOILET EXHAUST FAN ON CURB - SEE MECH
11. MECH EQUIP ON CURB - SEE MECH
12. LAUNDRY CHUTE VENT
13. TPO MEBRANE (WHITE) ROOF ASSEMBLY
14. COMPRESSOR - SEE MECH
15. ROOF HOSE BIBB - SEE PLUMB
16. UNIVERSAL VENT UV-75 BY ACTIVE VENTILATION PRODUCTS: EACH HAS 0.52 SF FREE AREA OF AIR FLOW
17. SOFFIT VENT - HARDIE VENTED TRIM, --- 5 SQ IN PER LF OF AIR FLOW

LEGEND

	METAL ROOF		
	TPO FLAT ROOF	RD	ROOF DRAIN
DS	DOWN-SPOUT	OD	OVER-FLOW DRAIN
	LADDER-WALL MOUNTED		ROOF HATCH
			DIRECTION OF SLOPED ROOF

GENERAL NOTES

A. GC SHALL REFERENCE M.E.P. DRAWINGS FOR ANY ROOF PENETRATIONS NOT GRAPHICALLY INDICATED ON MECHANICAL, ELECTRICAL, & PLUMBING SHALL BE RELAYED TO ARCHITECT PRIOR TO CONSTRUCTION.

B. ALL ROOF PENETRATIONS TO BE PAINTED TO MATCH METAL ROOFING.

C. CONTRACTOR SHALL PROVIDE 1/4" : 12" DRAINAGE TO ALL FLAT ROOF DRAINAGE LOCATIONS.

D. MTL ROOF DETAILS ON SHEET A361

E. FLAT (TPO) ROOF DETAILS ON SHEET A371

F. TIE DOWNSPOUT INTO STORM LINES - SEE CIVIL &- DETAIL B4/A351

G. GC TO PROVIDE ADEQUATE EXHAUST & INTAKE NFVA (NET FREE AREA) AT ALL AREAS AS INDICATED ON THE ROOF PLAN & AS NOTED ON DETAILS. VENTS SHALL BE EQUALLY DISTRIBUTED ALONG SEPARATE ROOF ELEMENTS ALONG THE RIDGE OR HIGH POINT OF ROOF (EXHAUST) & SOFFITS (INTAKE). PROVIDE BIRD SCREEN.

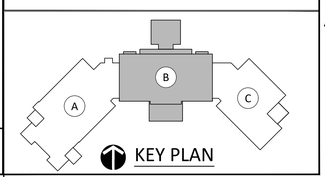

KEY PLAN

KUO DIEDRICH CHI
730 PEACHTREE STREET, NE
STUDIO 325
ATLANTA, GEORGIA 30308
678.244.6270
www.KDCarchitects.com

ARCHITECT:

ARCH. REG: AR91344

CONSULTANT:

REVISIONS

DATE:	DESCRIPTION:
10/18/24	SCHEMATIC DESIGN
6/5/25	DESIGN DEVELOPMENT
10/23/25	50% CONSTRUCTION DOCS
11/14/25	PERMIT SET

PROJECT:

SERENITY SEASIDE RESORT

BUILDING #1

THE INN

186 SOUTH BAY SHORE DRIVE, EASTPOINT, FL 32328

Serenity Seaside Operations, LLC
174 Watercolor Way, PMB 410
Santa Rosa Beach, Florida 32459

JOB NUMBER: 23019.1

DATE: --/--/----

TITLE: ROOF PLAN: "PLAN B"

SHEET: A301B

K:\Projects\23\23019\DWGs\Serenity_Bldg-1_Inn\Sheets\23019.1--A301B.dwg Plotted: Nov 13, 2025 - 6:17pm by ColebLawrence

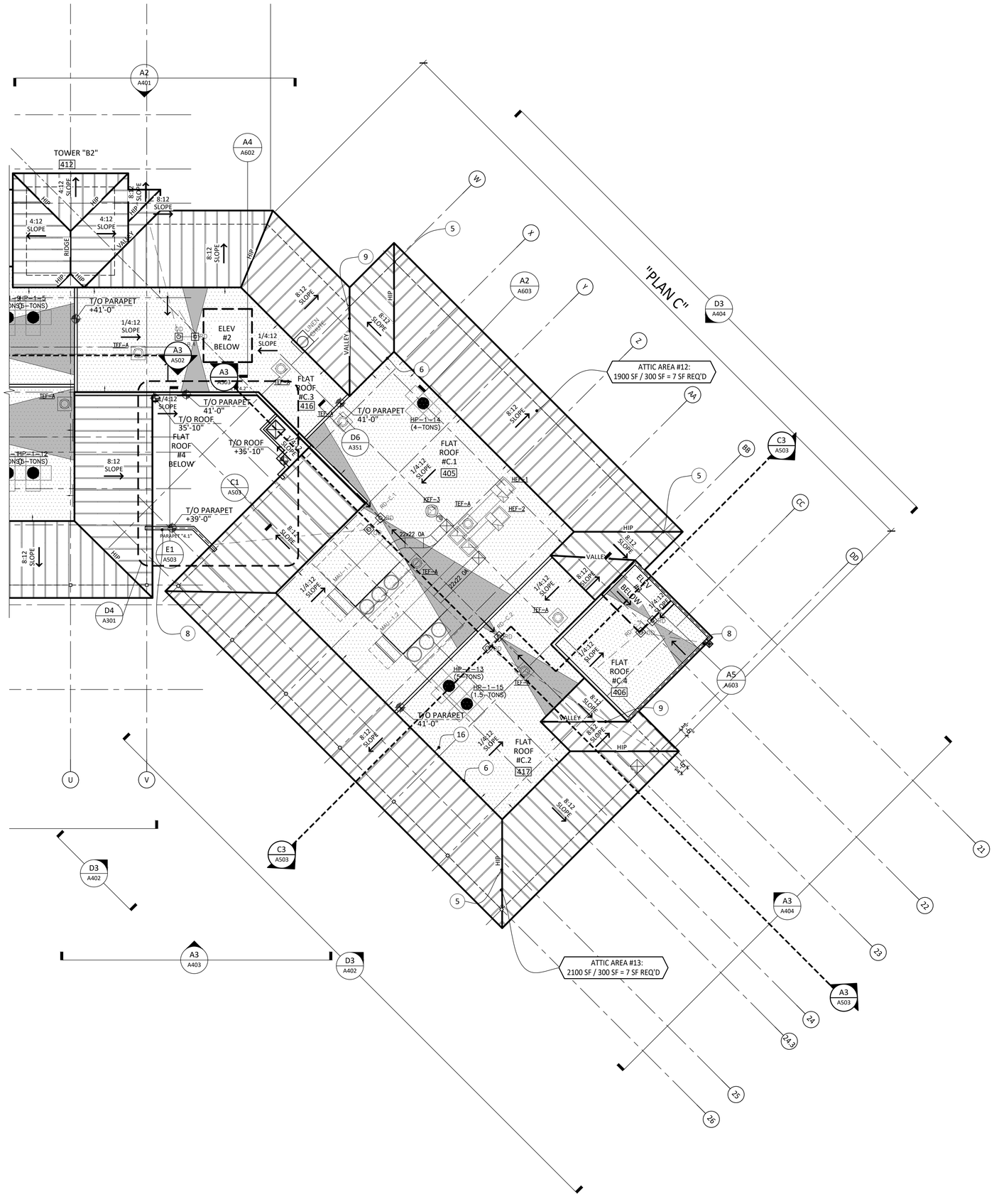

SHEET NOTES / LEGEND

1. ~~GUTTER, ALUM HALF ROUND, A6/A351~~
2. ROOF DRAIN & OVERFLOW DRAIN, D2/A351
3. ROOF DRAIN @ TPO, A6/A371
4. METAL ROOF - VENTING RIDGE, C5/A361
5. METAL ROOF - HIP CAP FLASHING, A2/A361
6. METAL ROOF - RIDGE @ MANSARD
7. TPO WALKPAD, A1/A371 - PROVIDE AROUND ALL HVAC ROOFTOP UNITS
8. ALUM COPING, C2/A371
9. METAL ROOF - VALLEY, A1/A361
10. TOILET EXHAUST FAN ON CURB - SEE MECH
11. MECH EQUIP ON CURB - SEE MECH
12. LAUNDRY CHUTE VENT
13. TPO MEBRANE (WHITE) ROOF ASSEMBLY
14. COMPRESSOR - SEE MECH
15. ROOF HOSE BIBB - SEE PLUMB
16. UNIVERSAL VENT UV-75 BY ACTIVE VENTILATION PRODUCTS: EACH HAS 0.52 SF FREE AREA OF AIR FLOW
17. SOFFIT VENT - HARDIE VENTED TRIM, --- 5 SQ IN PER LF OF AIR FLOW

LEGEND

	METAL ROOF		
	TPO FLAT ROOF	RD	ROOF DRAIN
DS	DOWN-SPOUT	OD	OVER-FLOW DRAIN
	LADDER-WALL MOUNTED		ROOF HATCH
			DIRECTION OF SLOPED ROOF

GENERAL NOTES

A. GC SHALL REFERENCE M.E.P. DRAWINGS FOR ANY ROOF PENETRATIONS NOT GRAPHICALLY INDICATED ON MECHANICAL, ELECTRICAL, & PLUMBING SHALL BE RELAYED TO ARCHITECT PRIOR TO CONSTRUCTION.

B. ALL ROOF PENETRATIONS TO BE PAINTED TO MATCH METAL ROOFING.

C. CONTRACTOR SHALL PROVIDE 1/4" : 12" DRAINAGE TO ALL FLAT ROOF DRAINAGE LOCATIONS.

D. MTL ROOF DETAILS ON SHEET A361

E. FLAT (TPO) ROOF DETAILS ON SHEET A371

F. TIE DOWNSPOUT INTO STORM LINES - SEE CIVIL &- DETAIL B4/A351

G. GC TO PROVIDE ADEQUATE EXHAUST & INTAKE NFVA (NET FREE AREA) AT ALL AREAS AS INDICATED ON THE ROOF PLAN & AS NOTED ON DETAILS. VENTS SHALL BE EQUALLY DISTRIBUTED ALONG SEPARATE ROOF ELEMENTS ALONG THE RIDGE OR HIGH POINT OF ROOF (EXHAUST) & SOFFITS (INTAKE). PROVIDE BIRD SCREEN.

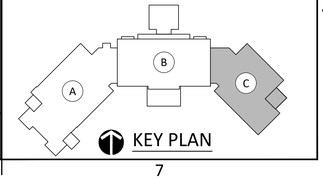

KUO DIEDRICH CHI
730 PEACHTREE STREET, NE
STUDIO 325
ATLANTA, GEORGIA 30308
678.244.6270
www.KDCarchitects.com

ARCHITECT:

ARCH. REG: AR91344

CONSULTANT:

REVISIONS

DATE:	DESCRIPTION:
10/18/24	SCHEMATIC DESIGN
6/5/25	DESIGN DEVELOPMENT
10/23/25	50% CONSTRUCTION DOCS
11/14/25	PERMIT SET

PROJECT:
SERENITY SEASIDE RESORT
BUILDING #1
THE INN
186 SOUTH BAY SHORE DRIVE, EASTPOINT, FL 32328

Serenity Seaside Operations, LLC
174 Watercolor Way, PMB 410
Santa Rosa Beach, Florida 32459

JOB NUMBER: 23019.1

DATE: --/--/----

TITLE: ROOF PLAN: "PLAN C"

SHEET: A301C

A2 | ROOF PLAN - "PLAN C"
A301C | 1/8" = 1'-0"

K:\Projects\23\23019\DWGs\Serenity_Bldg-1_Inn\Sheets\23019.1-A301C.dwg Plotted: Nov 13, 2025 - 6:17pm by CalebLawrence

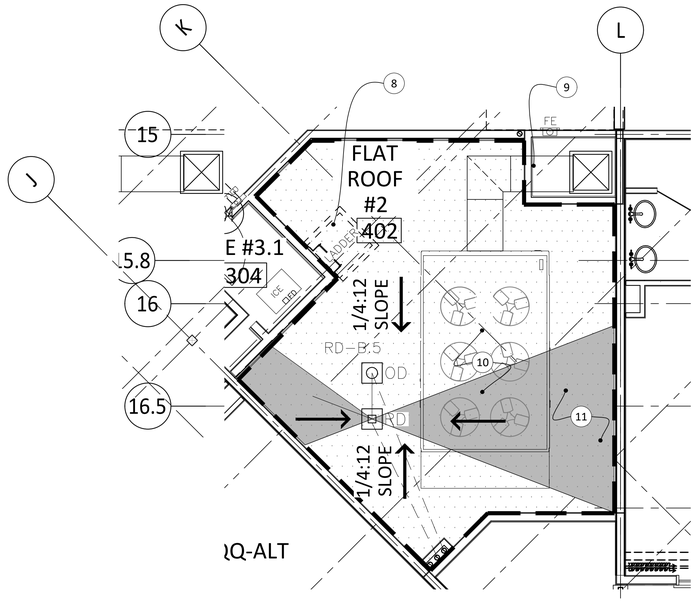

D1 | PLAN @ HVAC ROOF WELL - WEST

A301 | 1/4" = 1'-0"

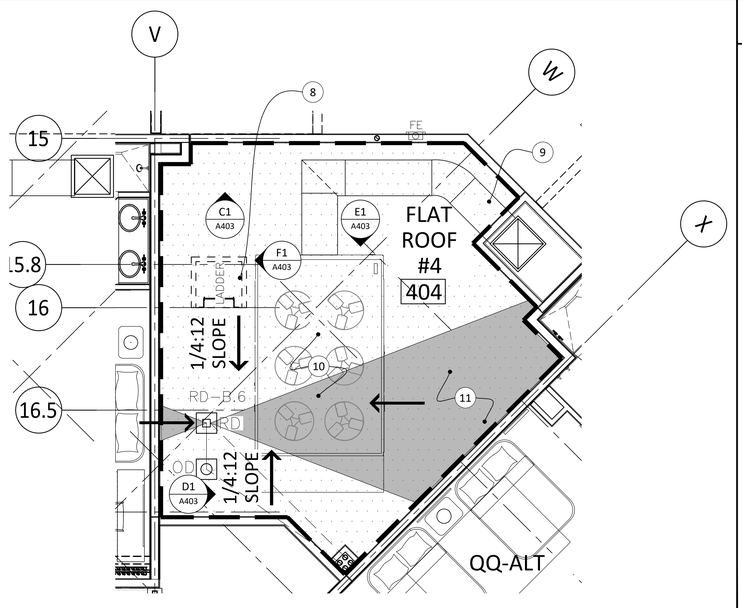

D4 | PLAN @ HVAC ROOF WELL - EAST

A301 | 1/4" = 1'-0"

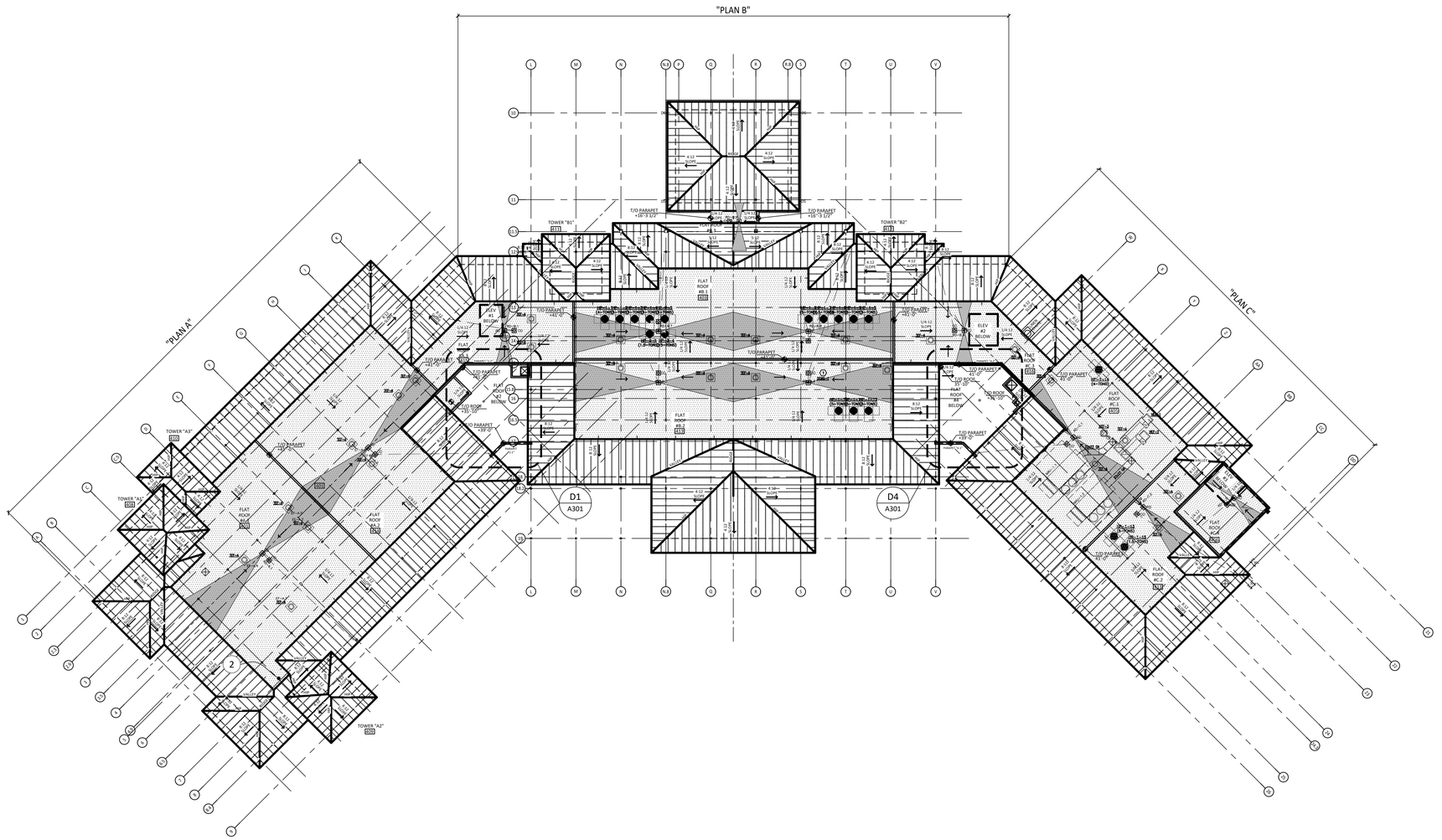

A1 | ROOF PLAN - COMPOSITE

A301 | 1/16" = 1'-0"

SHEET NOTES / LEGEND

1. TOILET EXHAUST FAN ON CURB - SEE MECH
2. MECH EQUIP ON CURB - SEE MECH
3. LAUNDRY CHUTE VENT
4. TPO MEMBRANE (WHITE) ROOF ASSEMBLY
5. COMPRESSOR - SEE MECH
6. ROOF HOSE BIBB - SEE PLUMB
7. UNIVERSAL VENT UV-75 BY ACTIVE VENTILATION PRODUCTS: EACH HAS 0.52 SF FREE AREA
8. ROOF HATCH, A1/A351
9. HORIZ DUCTWORK, SEE MECH
10. ROOF TOP UNIT, SEE MECH
11. SHADED AREA IS TAPERED ROOF INSUL, 1/4" : 12" SLOPE TO ROOF DRAIN

LEGEND

METAL ROOF			
TPO FLAT ROOF		RD	ROOF DRAIN
DS	DOWN-SPOUT	OD	OVER-FLOW DRAIN
	LADDER-WALL MOUNTED		ROOF HATCH
			DIRECTION OF SLOPED ROOF

GENERAL NOTES

A. GC SHALL REFERENCE M.E.P. DRAWINGS FOR ANY ROOF PENETRATIONS NOT GRAPHICALLY INDICATED ON MECHANICAL, ELECTRICAL, & PLUMBING SHALL BE RELAYED TO ARCHITECT PRIOR TO CONSTRUCTION.

B. ALL ROOF PENETRATIONS TO BE PAINTED TO MATCH METAL ROOFING.

C. CONTRACTOR SHALL PROVIDE 1/4" : 12" DRAINAGE TO ALL FLAT ROOF DRAINAGE LOCATIONS.

D. MTL ROOF DETAILS ON SHEET A361

E. FLAT (TPO) ROOF DETAILS ON SHEET A371

F. TIE DOWNSPOUT INTO STORM LINES - SEE CIVIL &- DETAIL B4/A351

G. GC TO PROVIDE ADEQUATE EXHAUST & INTAKE NFVA (NET FREE AREA) AT ALL AREAS AS INDICATED ON THE ROOF PLAN & AS NOTED ON DETAILS. VENTS SHALL BE EQUALLY DISTRIBUTED ALONG SEPARATE ROOF ELEMENTS ALONG THE RIDGE OR HIGH POINT OF ROOF (EXHAUST) & SOFFITS (INTAKE). PROVIDE BIRD SCREEN.

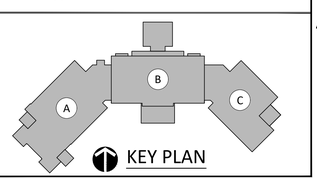

KEY PLAN

KUO DIEDRICH CHI
730 PEACHTREE STREET, NE
STUDIO 325
ATLANTA, GEORGIA 30308
678.244.6270
www.KDCarchitects.com

ARCHITECT:

ARCH. REG: AR91344

CONSULTANT:

REVISIONS

DATE:	DESCRIPTION:
10/18/24	SCHEMATIC DESIGN
6/5/25	DESIGN DEVELOPMENT
10/23/25	50% CONSTRUCTION DOCS
11/14/25	PERMIT SET

PROJECT:

SERENITY SEASIDE RESORT

BUILDING #1

THE INN

186 SOUTH BAY SHORE DRIVE, EASTPOINT, FL 32328

Serenity Seaside Operations, LLC
174 Watercolor Way, PMB 410
Santa Rosa Beach, Florida 32459

JOB NUMBER: 23019.1

DATE: --/--/----

TITLE: ROOF PLAN: COMPOSITE

SHEET: A301

K:\Projects\23\23019\DWGs\Serenity_Bldg-1_Inn\Sheets\23019.1-A301.dwg Plotted: Nov 13, 2025 - 6:16pm by ColebLawrence

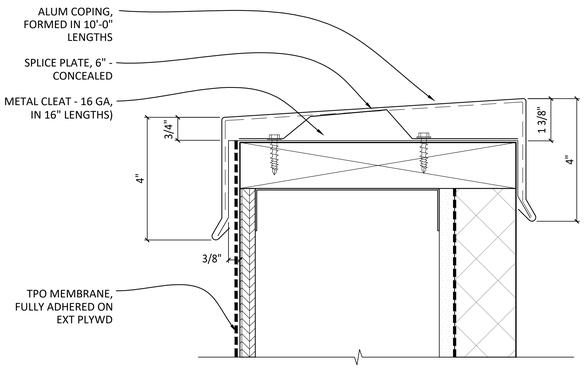

E1 ALUM COPING PROFILE "A" (METAL STUD)

A351 | 6" = 1'-0"

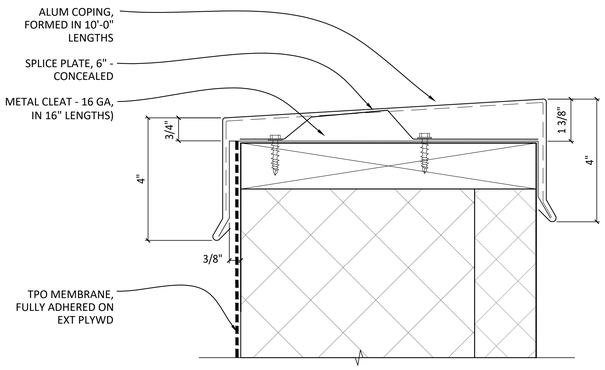

E3 ALUM COPING PROFILE "B" (CMU)

A351 | 6" = 1'-0"

GENERAL NOTES

A. -

SHEET NOTES / LEGEND

1. ALUM COPING COLOR TO MATCH MTL STANDING SEAM ROOF

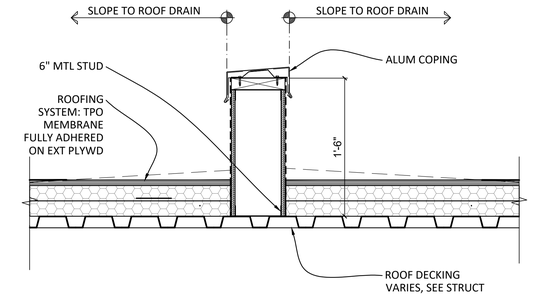

D6 SECTION @ ROOF WELL PARAPET

A351 | 1-1/2" = 1'-0"

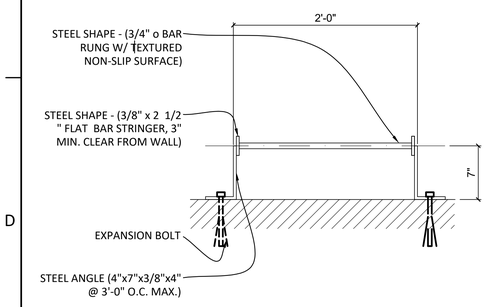

D1 PLAN DETAIL @ LADDER

A351 | 1-1/2" = 1'-0"

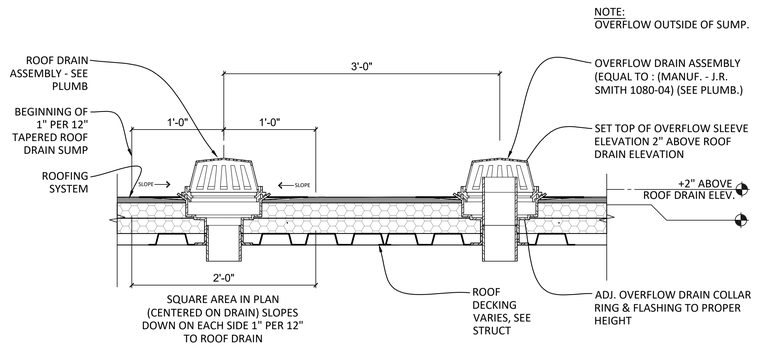

D2 SECTION @ ROOF DRAIN & OVERFLOW DRAIN

A351 | 1-1/2" = 1'-0"

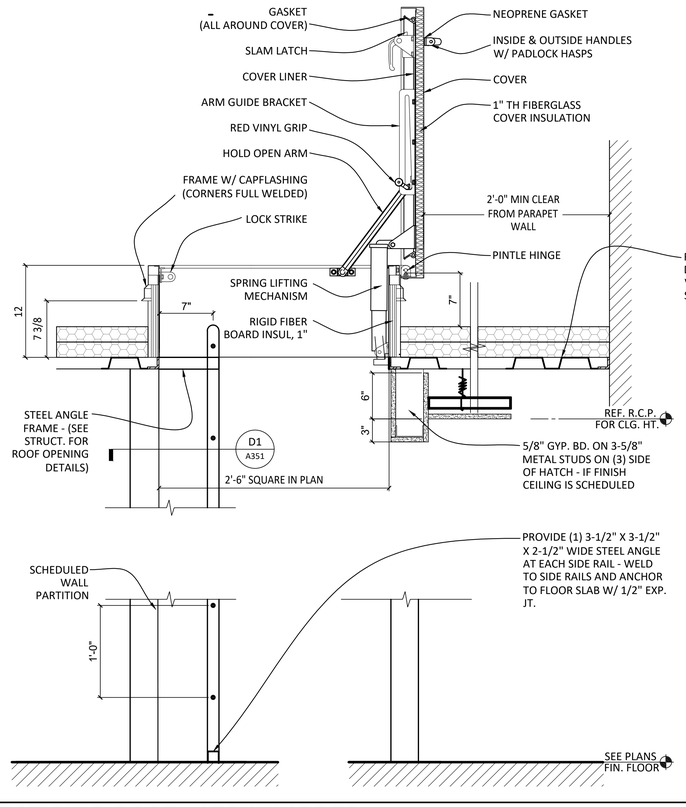

A1 SECTION @ ROOF HATCH / LADDER

A351 | 1-1/2" = 1'-0"

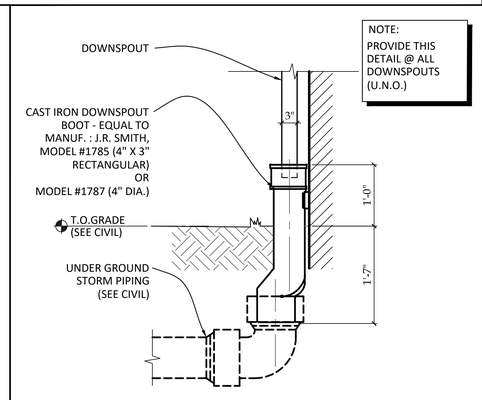

B4 DOWNSPOUT PROFILE

A351 | 1" = 1'-0"

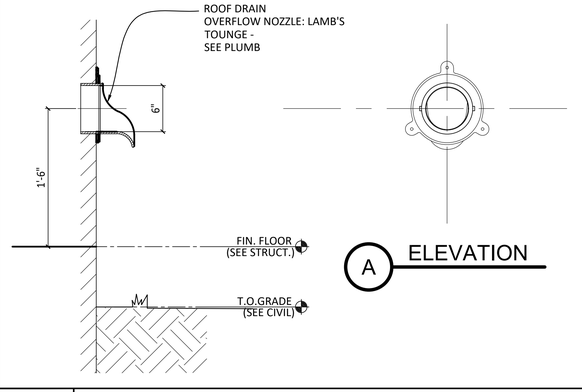

A4 SECTION @ OVERFLOW DRAIN

A351 | 1-1/2" = 1'-0"

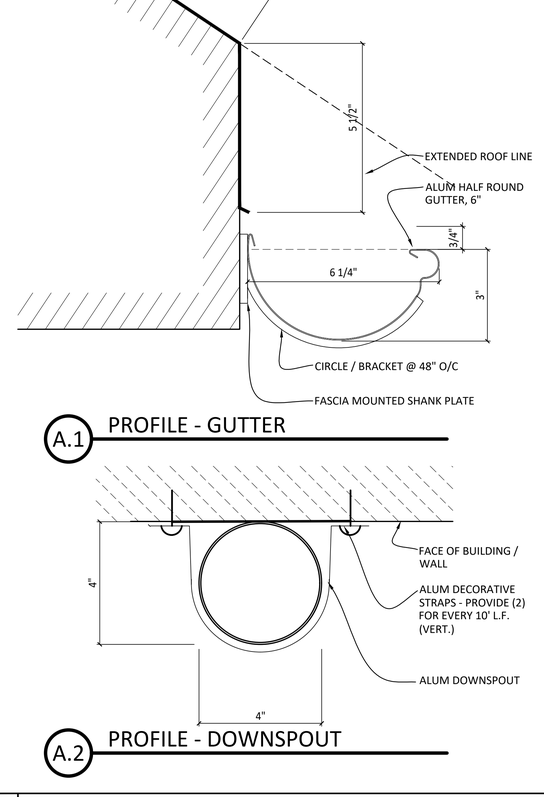

A.1 PROFILE - GUTTER

A.2 PROFILE - DOWNSPOUT

A6 GUTTER & DOWNSPOUT DETAIL

A351 | 6" = 1'-0"

KUO DIEDRICH CHI
730 PEACHTREE STREET, NE
STUDIO 325
ATLANTA, GEORGIA 30308
678.244.6270
www.KDCarchitects.com

ARCHITECT:

ARCH. REG: AR91344

CONSULTANT:

REVISIONS

DATE:	DESCRIPTION:
10/18/24	SCHEMATIC DESIGN
6/5/25	DESIGN DEVELOPMENT
10/23/25	50% CONSTRUCTION DOCS
11/14/25	PERMIT SET

PROJECT:

SERENITY SEASIDE RESORT

BUILDING #1

THE INN

186 SOUTH BAY SHORE DRIVE, EASTPOINT, FL 32328

Serenity Seaside Operations, LLC
174 Watercolor Way, PMB 410
Santa Rosa Beach, Florida 32459

JOB NUMBER: 23019.1

DATE: --/--/----

TITLE: ROOF DETAILS

SHEET: A351

K:\Projects\23\23019\DWGs\Serenity_Bldg-1_Inn\Sheets\23019.1-A351.dwg Plotted: Nov 13, 2025 - 6:17pm by ColebLawrence

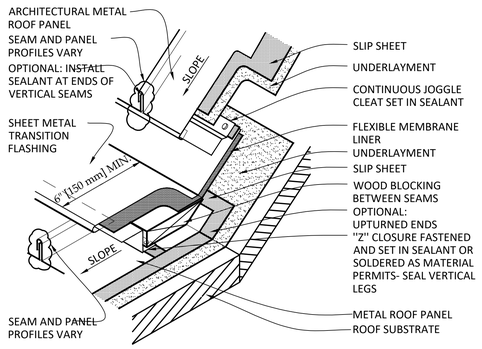

NOTES:
1. SPECIFIC FASTENING REQUIREMENTS ARE NOT INDICATED, AS THEY VARY FROM SYSTEM TO SYSTEM DEPENDING UPON PANEL MANUFACTURER'S REQUIREMENTS, WIND ZONE AND BUILDING CODE.
2. THIS METHOD OF FLASHING FIXES THE LOWER ROOF PANELS.

C1 METAL ROOF TO METAL ROOF TRANS

A361 NTS

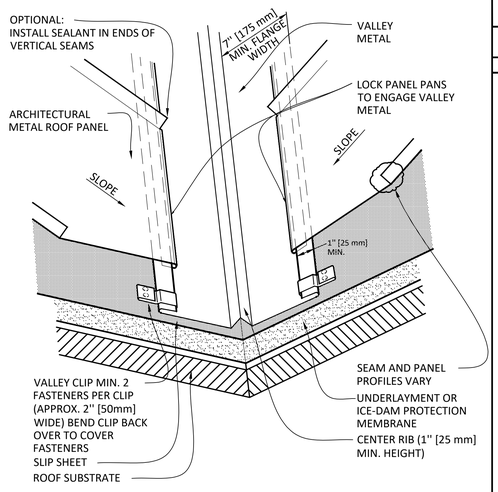

NOTES:
1. SPECIFIC FASTENING REQUIREMENTS ARE NOT INDICATED, AS THEY VARY FROM SYSTEM TO SYSTEM DEPENDING UPON PANEL MANUFACTURER'S REQUIREMENTS, WIND ZONE AND BUILDING CODE.
2. WHERE ICE FORMATION IS EXPECTED, MINIMUM ROOF SLOPE FOR THIS VALLEY IS 6 12 (27 DEGREES).
3. DIMENSIONS FOR VALLEY METAL WIDTH MAY VARY ACCORDING TO PANEL LENGTHS AND GEOGRAPHIC CONSIDERATIONS.

A1 OPEN METAL VALLEY DETAIL

A361 NTS

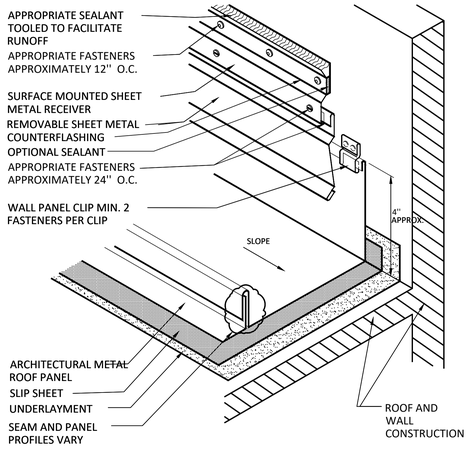

NOTES:
1. THIS DETAIL SHOULD BE USED ONLY WHERE THE DECK IS SUPPORTED BY THE ABUTTING WALL.
2. SPECIFIC FASTENING REQUIREMENTS ARE NOT INDICATED, AS THEY VARY FROM SYSTEM TO SYSTEM DEPENDING UPON PANEL MANUFACTURER'S REQUIREMENTS, WIND ZONE AND BUILDING CODE.
3. THIS DETAIL MAY BE USED WITH ''STARTER'' AND ''END'' PANELS.
4. REFER TO SM-13, 14, 15 IN THE SHEET METAL SECTION FOR ADDITIONAL COUNTERFLASHING OPTIONS.

C2 ROOF TO WALL (SIDEWALL) TRANS

A361 NTS

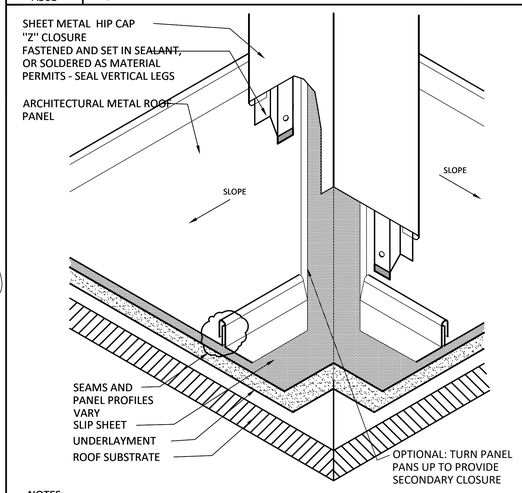

NOTES:
1. SPECIFIC FASTENING REQUIREMENTS ARE NOT INDICATED, AS THEY VARY FROM SYSTEM TO SYSTEM DEPENDING UPON PANEL MANUFACTURER'S REQUIREMENTS, WIND ZONE AND BUILDING CODE.
2. THIS METHOD OF FLASHING FIXES THE PANELS ALONG THE HIP IF THE "Z" CLOSURE IS FASTENED THROUGH TO THE ROOF DECK.

A2 HIP CAP FLASHING (AT MTL ROOF)

A361 NTS

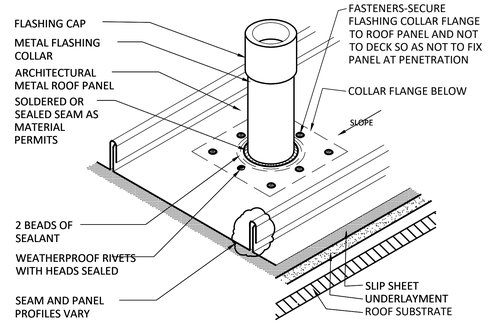

NOTES:
1. NRCA RECOMMENDS PENETRATIONS SHOULD NOT INTERFERE WITH PANEL SEAMS OR OCCUR AT TRANSVERSE SEAMS.
2. CUT HOLE IN ROOF DECK TO ALLOW FOR MOVEMENT.
3. VENT STACKS AND OTHER PIPES SHOULD HAVE A MINIMUM OF 12 INCHES [300 mm] OF CLEARANCE ON ALL SIDES FROM WALLS, CURBS, AND OTHER PROJECTIONS TO FACILITATE PROPER FLASHING.

A5 PLUMBING VENT FLASHING

A361 NTS

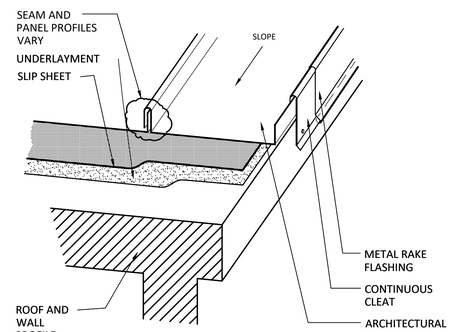

NOTES:
1. SPECIFIC FASTENING REQUIREMENTS ARE NOT INDICATED, AS THEY VARY FROM SYSTEM TO SYSTEM DEPENDING UPON PANEL MANUFACTURER'S REQUIREMENTS, WIND ZONE AND BUILDING CODE.

C4 RAKE EDGE FLASHING (CLEATED)

A361 NTS

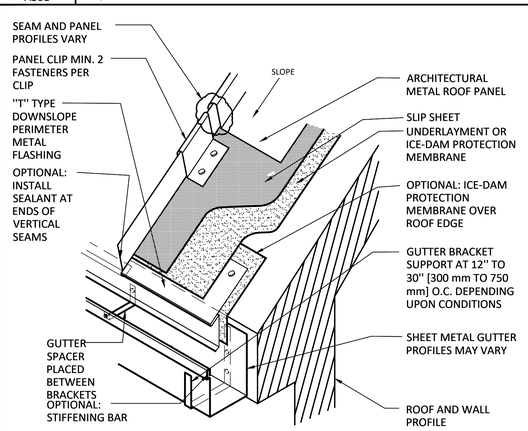

NOTES:
1. SPECIFIC FASTENING REQUIREMENTS ARE NOT INDICATED, AS THEY VARY FROM SYSTEM TO SYSTEM DEPENDING UPON PANEL MANUFACTURER'S REQUIREMENTS, WIND ZONE AND BUILDING CODE.
2. GUTTER PROFILE AND SIZE VARY ACCORDING TO ROOF AREA SIZE, ROOF SLOPE, BUILDING CODE AND REGIONAL PRACTICES.
3. REFER TO METAL TABLE 1 FOR PERIMETER EDGE METAL THICKNESS AND CLEAT RECOMMENDATIONS.
4. VARIOUS COMBINATIONS OF SUPPORT BRACKETS, SUPPORT BRACKETS AND SPACERS OR SPACER HANGERS CAN BE USED.

A4 DOWNSLOPE PERIMETER W/GUTTER

A361 NTS

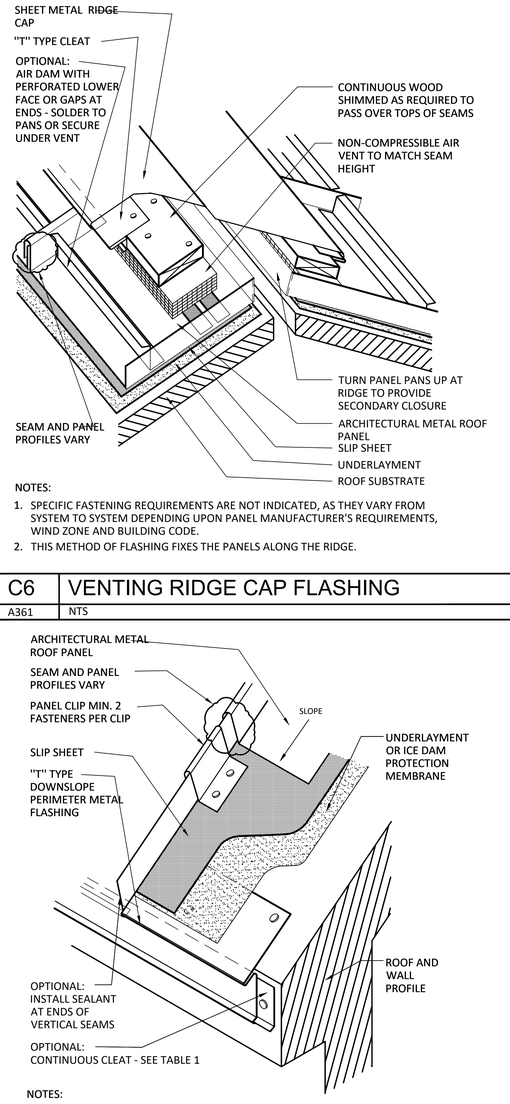

NOTES:
1. SPECIFIC FASTENING REQUIREMENTS ARE NOT INDICATED, AS THEY VARY FROM SYSTEM TO SYSTEM DEPENDING UPON PANEL MANUFACTURER'S REQUIREMENTS, WIND ZONE AND BUILDING CODE.
2. THIS METHOD OF FLASHING FIXES THE PANELS ALONG THE RIDGE.

C6 VENTING RIDGE CAP FLASHING

A361 NTS

NOTES:
1. SPECIFIC FASTENING REQUIREMENTS ARE NOT INDICATED, AS THEY VARY FROM SYSTEM TO SYSTEM DEPENDING UPON PANEL MANUFACTURER'S REQUIREMENTS, WIND ZONE AND BUILDING CODE.
2. REFER TO METAL TABLE 1 FOR PERIMETER EDGE METAL THICKNESS AND CLEAT RECOMMENDATIONS.

A6 DOWNSLOPE PERIM. EDGE MTL. FLASH

A361 NTS

SHEET NOTES / LEGEND

1. -

GENERAL NOTES

A. DESIGN BASIS FOR METAL ROOFING:

METAL ROOFING, STANDING SEAM

MANUF:	BERRIDGE MANUF CO
MODEL:	ZEE-LOCK ALUM ROOF PANEL
NOA:	#20-0902.06

KUO DIEDRICH CHI
730 PEACHTREE STREET, NE
STUDIO 325
ATLANTA, GEORGIA 30308
678.244.6270
www.KDCarchitects.com

ARCHITECT:
ARCH. REG: AR91344

CONSULTANT:

REVISIONS

DATE:	DESCRIPTION:
10/18/24	SCHEMATIC DESIGN
6/5/25	DESIGN DEVELOPMENT
10/23/25	50% CONSTRUCTION DOCS
11/14/25	PERMIT SET

PROJECT:

SERENITY SEASIDE RESORT

BUILDING #1

THE INN

186 SOUTH BAY SHORE DRIVE, EASTPOINT, FL 32328

Serenity Seaside Operations, LLC
174 Watercolor Way, PMB 410
Santa Rosa Beach, Florida 32459

JOB NUMBER: 23019.1

DATE: --/--/----

TITLE: ROOF DETAILS, SLOPED

SHEET: A361

K:\Projects\23\23019\DWGs\Serenity_Bldg-1_Inn\Sheets\23019.1-A361.dwg Plotted: Nov 13, 2025 - 6:17pm by ColebLawrence

SHEET NOTES / LEGEND

1. GC TO PROVIDE WALKPAD TO ALL ROOF TOP EQUIP, FROM ROOF HATCH - SUBMIT LAYOUT IN SHOP DRAWING FOR APPROVAL
2. PROVIDE AT ALL ROOFTOP UNITS
3. OVERFLOW DRAIN, DETAIL D2/A351
4. ALUM COPING, DETAIL D5/A351

GENERAL NOTES

A. DESIGN BASIS FOR TPO ROOFING (SEE SPEC SECTION 07 5423):

TPO ROOFING
Design Basis: JOHNS MANVILLE CORP
NOA #14-0627.06

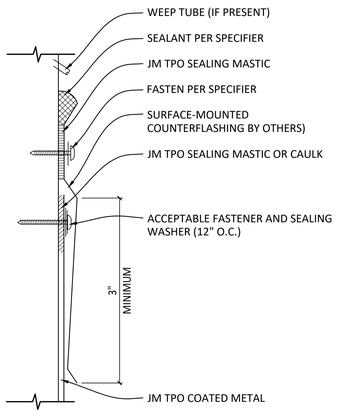

:

)ETAIL TO BE USED IN CONJUNCTION WITH GUIDE SPECIFICATIONS CONTAINING :EQUIREMENTS FOR NAILERS, INSULATION, ETC.

:URFACE MOUNT FLASHING MUST BE INSTALLED TO HARD, SMOOTH, NON POROUS :UBSTRATES.

)O NOT APPLY JM TOP POLYURETHANE CAULK OVER ASPHALT OR OTHER MATERIALS 'HAT WILL PREVENT PROPER ADHESION.

SURFACE MOUNTED

B1 COUNTERFLASHING - METAL (TPO)

A371 | NTS

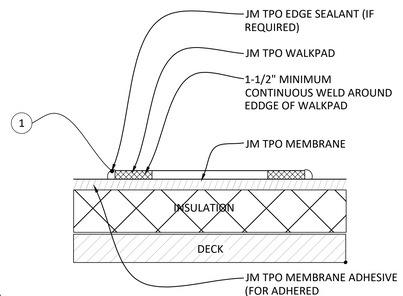

NOTES:

1. DETAIL TO BE USED IN CONJUNCTION WITH GUIDE SPECIFICATIONS CONTAINING REQUIREMENTS FOR NAILERS, INSULATION, ETC.
2. JM TPO EDGE SEALANT IS REQUIRED ON ALL CUT OR NON ENCAPSULATED EDGES OF REINFORCED MEMBRANE. THIS INCLUDES FACTORY-CUT MEMBRANE.
3. WALKPAD IS NOT INTENDED FOR USE IN HEAVY TRAFFIC AREAS.
4. THE WALKPADS MUST NOT BE INSTALLED OVER FIELD SEAMS AND FASTENER ROWS AND MUST BE GAPPED FROM THESE AREAS A MINIMUM OF 6 (150mm)

A1 WALKPAD DETAIL (TPO)

A371 | NTS

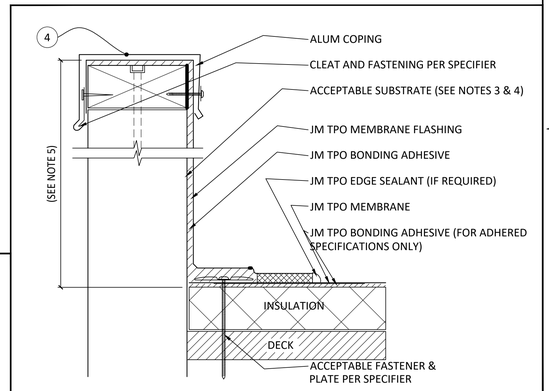

NOTES:

1. DETAIL TO BE USED IN CONJUNCTION WITH GUIDE SPECIFICATIONS CONTAINING REQUIREMENTS FOR NAILERS, INSULATION, ETC.
2. JM TPO EDGE SEALANT IS USED TO SEAL THE MEMBRANE EDGES WHERE REINFORCING FABRIC IS CUT AND EXPOSED. EDGE SEALANT IS REQUIRED ON ALL END LAPS, T-JOINTS, AND FIELD-CUT EDGES.
3. IN NEW CONSTRUCTION ACCEPTABLE SUBSTRATES INCLUDE EXTERIOR PLYWOOD, POURED PRECAST CONCRETE, CEMENT BLOCK OR MASONRY WALLS. CONTACT JM TECHNICAL SERVICES FOR OTHER SUBSTRATES.
4. ON REROOFING PROJECTS AN ACCEPTABLE ASPHALT BARRIER SHOULD BE INSTALLED OVER THE EXISTING FLASHINGS TO FULLY DIVORCE THE JM FLASHING MEMBRANE FROM ANY INCOMPATIBLE MATERIALS.
5. FOR WALL FLASHINGS OVER 3 (90mm), INTERMEDIATE FASTENER REQUIRED AT 3 (90mm) INTERVALS.
6. INSULATION MUST BE COMPATIBLE WITH JM TPO BONDING ADHESIVE.

C2 ADHERED MEM WALL COVERING (TPO)

A371 | NTS

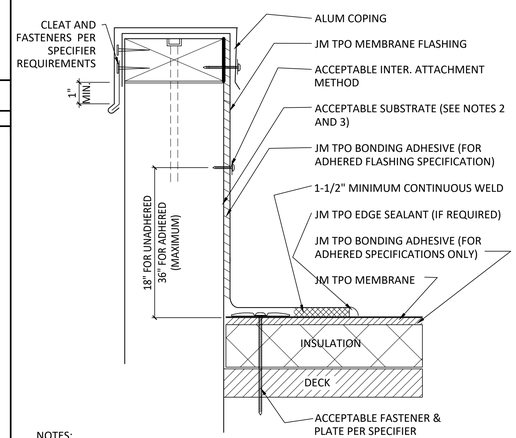

NOTES:

1. DETAIL TO BE USED IN CONJUNCTION WITH GUIDE SPECIFICATIONS CONTAINING REQUIREMENTS FOR NAILERS, INSULATION, ETC.
2. IN NEW CONSTRUCTION ACCEPTABLE SUBSTRATES INCLUDE EXTERIOR PLYWOOD, POURED PRECAST CONCRETE, CEMENT BLOCK OR MASONRY WALLS. CONTACT JM TECHNICAL SERVICES FOR OTHER SUBSTRATES.
3. ON REROOFING PROJECTS AN ACCEPTABLE ASPHALT BARRIER SHOULD BE INSTALLED OVER THE EXISTING FLASHINGS TO FULLY DIVORCE THE JM FLASHING MEMBRANE FROM ANY INCOMPATIBLE MATERIALS.

A2 MEMBRANE WALL COVERING (TPO)

A371 | NTS

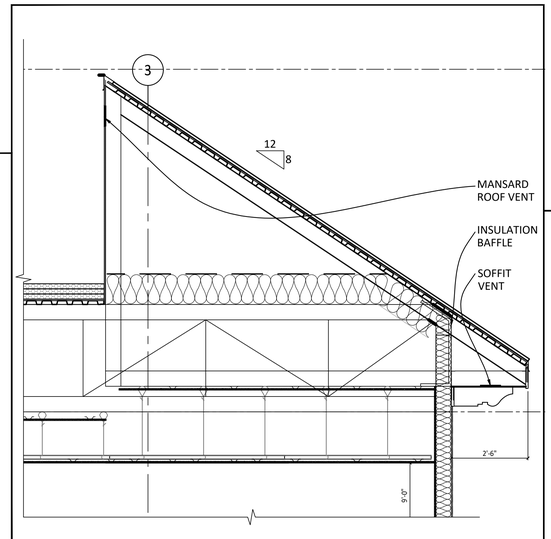

D4 DETAIL @ MANSARD ROOF VENTILATION

A371 | 1/2" = 1'-0"

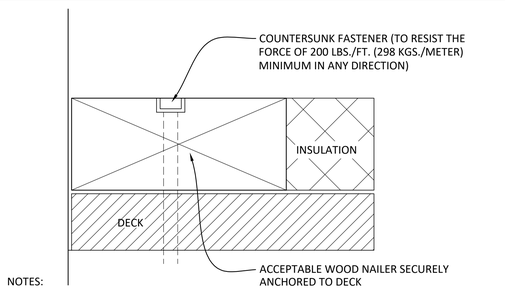

NOTES:

1. DETAIL TO BE USED IN CONJUNCTION WITH GUIDE SPECIFICATIONS CONTAINING REQUIREMENTS FOR NAILERS, INSULATION, ETC.
2. ACCORDING TO PROJECT CONDITIONS, THE SPECIFIER AND/OR APPLICATOR MUST DETERMINE THE APPROPRIATE METHOD TO SECURE THE WOOD NAILER, SO AS TO MEET JM TPO SPECIFICATIONS AND COMPLY WITH CURRENT GLOBAL LOSS PREVENTION DATA SHEET 1-49
3. SUBSTRATE/STRUCTURE TO WHICH NAILER IS ATTACHED MUST BE ABLE TO RESIST A FORCE OF 200 LBS./FT. (298 KGS./METER) MINIMUM IN ALL DIRECTIONS.

B4 WOOD NAILER ATTACHMENT (TPO)

A371 | NTS

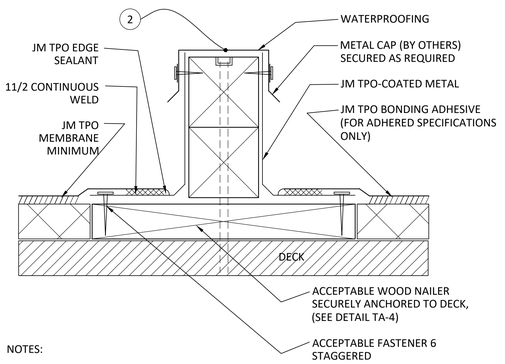

NOTES:

1. DETAIL TO BE USED IN CONJUNCTION WITH GUIDE SPECIFICATIONS CONTAINING REQUIREMENTS FOR NAILERS, INSULATION, ETC.
2. JM TPO EDGE SEALANT IS REQUIRED ON ALL CUT OR NON ENCAPSULATED EDGES OF REINFORCED MEMBRANE. THIS INCLUDES FACTORY-CUT MEMBRANE.
3. SPECIFIER/APPLICATOR MUST DETERMINE APPROPRIATE EQUIPMENT SUPPORT TO BE USED.

A4 SUPPORT [HEAVY] COATED MTL (TPO)

A371 | NTS

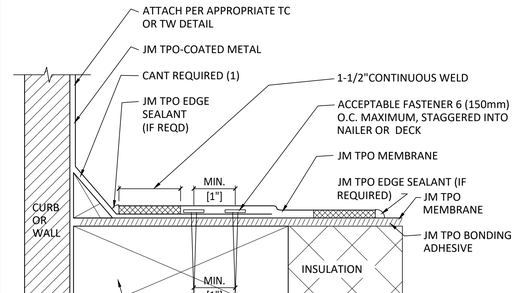

NOTES:

1. DETAIL TO BE USED IN CONJUNCTION WITH GUIDE SPECIFICATIONS CONTAINING REQUIREMENTS FOR NAILERS, INSULATION, ETC.
2. JM TPO EDGE SEALANT IS USED TO SEAL THE MEMBRANE EDGES WHERE REINFORCING FABRIC IS CUT AND EXPOSED, EDGE SEALANT IS REQUIRED ON ALL END LAPS, T-JOINTS, AND FIELD CUT EDGES.
3. FOR JM TPO-COATED METAL BUTT JOINT SEE DETAIL TB-23.
4. INSULATION MUST BE COMPATIBLE WITH JM TOP BONDING ADHESIVE.

C6 TPO COATED MTL FLASH BASE TIE IN

A371 | NTS

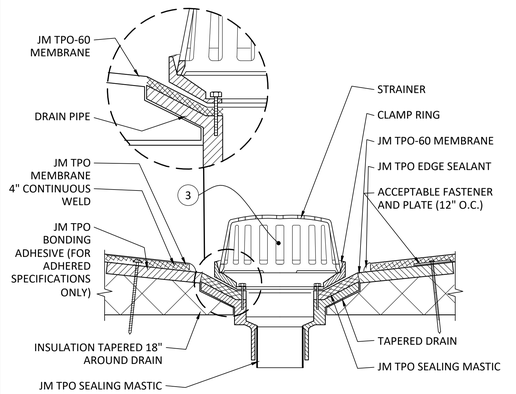

NOTES:

1. DETAIL TO BE USED IN CONJUNCTION WITH GUIDE SPECIFICATIONS CONTAINING REQUIREMENTS FOR NAILERS, INSULATION, ETC.
2. JM TPO EDGE SEALANT IS USED TO SEAL THE MEMBRANE EDGES WHERE REINFORCING FABRIC IS CUT AND EXPOSED. EDGE SEALANT IS REQUIRED ON ALL END LAPS, T-JOINTS, AND FIELD CUT EDGES.
3. FIELD MEMBRANE SEAMS MUST NOT RUN THROUGH DRAIN BOWL
.
4. ALL MEMBRANE CUTS MUST ROUNDED TO PREVENT TEARING.
5. REPLACE ANY BROKEN COMPONENTS (DRAINS, RINGS, BOLTS, ETC.)
6. SUMP AREA MUST BE PROPERLY TAPERED SO THAT THE DRAIN FLASHING IS NOT INSTALLED UNDER TENSION
7. INSULATION MUST BE COMPATIBLE WITH JM TPO BONDING ADHESIVE.

A6 ROOF DRAIN (TPO)

A371 | NTS

KUO DIEDRICH CHI
730 PEACHTREE STREET, NE
STUDIO 325
ATLANTA, GEORGIA 30308
678.244.6270
www.KDCarchitects.com

ARCHITECT:

ARCH. REG: AR91344

CONSULTANT:

REVISIONS

DATE:	DESCRIPTION:
10/18/24	SCHEMATIC DESIGN
6/5/25	DESIGN DEVELOPMENT
10/23/25	50% CONSTRUCTION DOCS
11/14/25	PERMIT SET

PROJECT:

SERENITY SEASIDE RESORT

BUILDING #1

THE INN

186 SOUTH BAY SHORE DRIVE, EASTPOINT, FL 32328

Serenity Seaside Operations, LLC
174 Watercolor Way, PMB 410
Santa Rosa Beach, Florida 32459

JOB NUMBER: 23019.1

DATE: --/--/----

TITLE: ROOF DETAILS, FLAT

SHEET: A371

K:\Projects\23\23019\DWGs\Serenity_Bldg-1_Inn\Sheets\23019.1-A371.dwg Plotted: Nov 14, 2025 – 3:08pm by lshwer

EXTERIOR FINISH SCHEDULE

	ITEM	COLOR	MANUFACTURER	REMARKS
DIV 03	GFRC COLUMNS	TBD	TBD	FACTORY FINISH
DIV 04	CAST STONE MASONRY	TBD	TBD	FACTORY FINISH
DIV 05	ALUM GUARDRAILS	TBD	TBD	FACTORY FINISH
DIV 06	WOOD CEILINGS	TBD	TBD	TBD
	TREX DECKING	TBD	TBD	FACTORY FINISH
DIV 07	METAL ROOF PANELS	TBD	TBD	FACTORY FINISH
	ALUM COPING	TBD	TBD	FACTORY FINISH
	EIFS - COLOR #1	TBD	TBD	TBD
	EIFS - COLOR #2	TBD	TBD	TBD
	FIBER CEMENT SIDING	TBD	TBD	PAINT
	FIBER CEMENT TRIM	TBD	TBD	PAINT
	PVC CEILINGS	TBD	TBD	PAINT
	ALUM GUTTER & DOWNSPOUT	TBD	TBD	FACTORY FINISH
	ALUM FLASHING	TBD	TBD	FACTORY FINISH
DIV 08	HOLLOW METAL DOOR FRAMES & DOORS	TBD	TBD	PAINT
	ALUM DOORS & FRAMES	TBD	TBD	FACTORY FINISH
	ALUM WINDOW FRAMES	TBD	TBD	FACTORY FINISH
	ALUM LOUVERS	TBD	TBD	FACTORY FINISH
	VINYL DOORS	TBD	TBD	FACTORY FINISH
	DOOR HARDWARE	TBD	TBD	FACTORY FINISH
DIV 09	STUCCO / PARGE COAT	TBD	TBD	TBD
DIV 32	ALUM FENCING & GATES	TBD	TBD	FACTORY FINISH

E1 EXTERIOR COLORS & FINISHES — A401 — NTS



E3 EXTERIOR ELEVATION: FRONT (NORTH WEST) — A401 — 1/8" = 1'-0"



C1 EXTERIOR ELEVATION: FRONT (NORTH) — A401 — 1/8" = 1'-0"

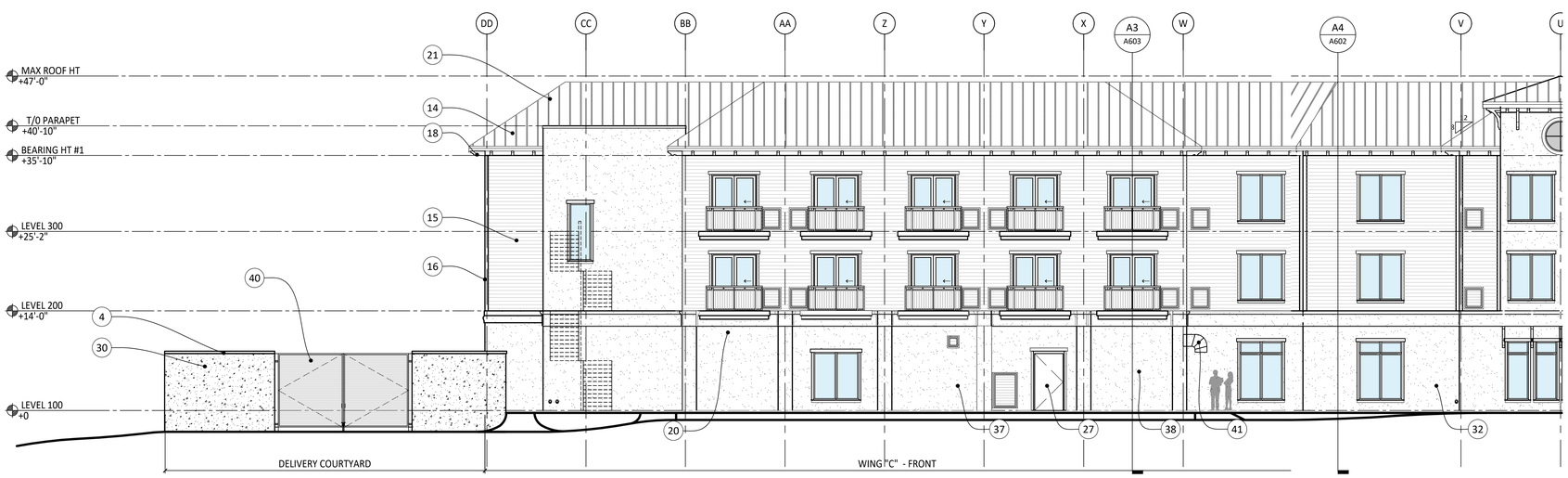

A1 EXTERIOR ELEVATION: FRONT (NORTH EAST) — A401 — 1/8" = 1'-0"

SHEET NOTES / LEGEND

1. ~~03 0000_CONCRETE~~
2. ~~03 1000_GFRC COLUMN~~
3. ~~03 1000_GFRC PILASTER~~
4. 04 2000_CMU
5. ~~04 7200_CAST STONE MASONRY~~
6. 05 7200_ALUM GUARDRAIL, POST MTD @ JULIET BALCONY
7. ~~05 7200_ALUM GUARDRAIL, WALL MTD~~
8. ~~06 2013_FRAMING AT PRIVACY SCREEN @ BALCONY~~
9. ~~06 4910_PRIVACY SCREEN SHUTTER @ BALCONY~~
10. 06 7300_COMPOSITE DECKING (TREX) @ BALCONY EDGE
11. 07 2419_EIFS STOTHERM CI
12. 07 2419_EIFS HORIZONTAL BAND
13. 07 2419_EIFS CONTROL JOINT
14. 07 4110_METAL ROOF PANELS
15. 07 4646_FIBER-CEMENT LAP SIDING
16. 07 4646_FC TRIM
17. 07 4646_FC COLUMN, A3/A662
18. 07 4646_FC RAFTER TAIL, C6/A662
19. 07 4646_FC EXTERIOR BRACKET, C6/A662
20. 07 4646_FC RADIUS LOUVER, A4/A662
21. 07 6000_ALUM COPING AT PARAPET
22. 07 6000_ALUM FLASHING
23. 07 7123_GUTTER - ALUM HALF ROUND, A6/A351
24. 07 7123_DOWNSPOUT - ALUM, A6/A351
25. 07 9210_FACADE SEALANTS
26. 08 1110_HM DOOR FRAME
27. 08 1110_HM DOOR
28. 08 3223_VINYL - SLIDING GLAZED DOORS
29. 08 5313_VINYL - IMPACT RESISTANT WINDOWS
30. 09 2423_PORTLAND CEMENT STUCCO
31. 09 2423_STUCCO ON CMU, B6/A681
32. 09 2423_STUCCO ON SHEATHING/MTL STUDS, D6/A681
33. 08 4113_ALUM-FRAMED WINDOW
34. 08 4114_ALUM FRAMED DOOR
35. 22 0000_LAMB'S TONGUE OVERFLOW, A4/A3511
36. 23 0000_EXHAUST GRILLE, SEE MECH
37. 23 0000_VTAC GRILLE, SEE MECH
38. 23 0000_ALUM LOUVER, SEE MECH
39. 26 0000_EXT LIGHT FIXTURE, WALL MTD, SEE ELEC
40. 32 3119_METAL SWINGING GATE, A5/A691 SIM
41. DRYER EXHAUST, SEE MECH

LEGEND

METAL ROOFING, STANDING SEAM, 12" OC	LOUVERS
FC SIDING (HORIZ) 6" W.	GLAZING
EIFS	GLAZING SPANDREL
STUCCO	

GENERAL NOTES

A. SEE EXTERIOR MATERIAL COLORS: E1/A401

B. SEE ROOF PLANS ON SHEET A301 FOR EXTERIOR ELEVATION CALLOUTS

C. FLORIDA PRODUCT NUMBERS (NOA & FL): A4/G114

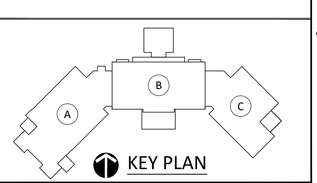

KUO DIEDRICH CHI

730 PEACHTREE STREET, NE
STUDIO 325
ATLANTA, GEORGIA 30308
678.244.6270

www.KDCarchitects.com

ARCHITECT:

ARCH. REG: AR91344

CONSULTANT:

REVISIONS

DATE:	DESCRIPTION:
10/18/24	SCHEMATIC DESIGN
6/5/25	DESIGN DEVELOPMENT
10/23/25	50% CONSTRUCTION DOCS
11/14/25	PERMIT SET

PROJECT:

SERENITY SEASIDE RESORT

BUILDING #1

THE INN

186 SOUTH BAY SHORE DRIVE, EASTPOINT, FL 32328

Serenity Seaside Operations, LLC
174 Watercolor Way, PMB 410
Santa Rosa Beach, Florida 32459

JOB NUMBER: 23019.1

DATE: --/--/----

TITLE: EXTERIOR ELEVATIONS: FRONT

SHEET: A401

K:\Projects\23\23019\DWGs\Serenity_Bldg-1_Inn\Sheets\23019.1-A401.dwg Plotted: Nov 13, 2025 - 6:18pm by ColebLawrence

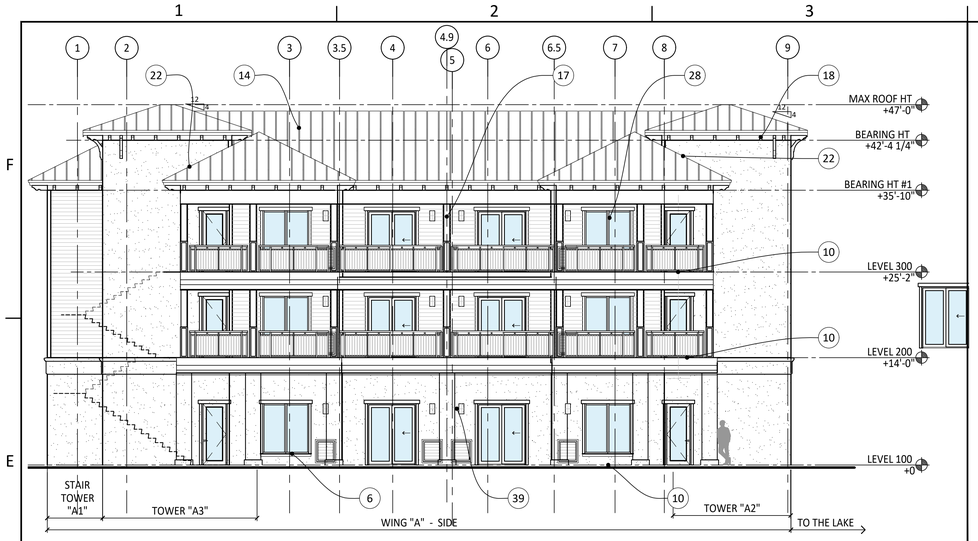

E1 EXTERIOR ELEVATION: WEST

A402 | 1/8" = 1'-0"

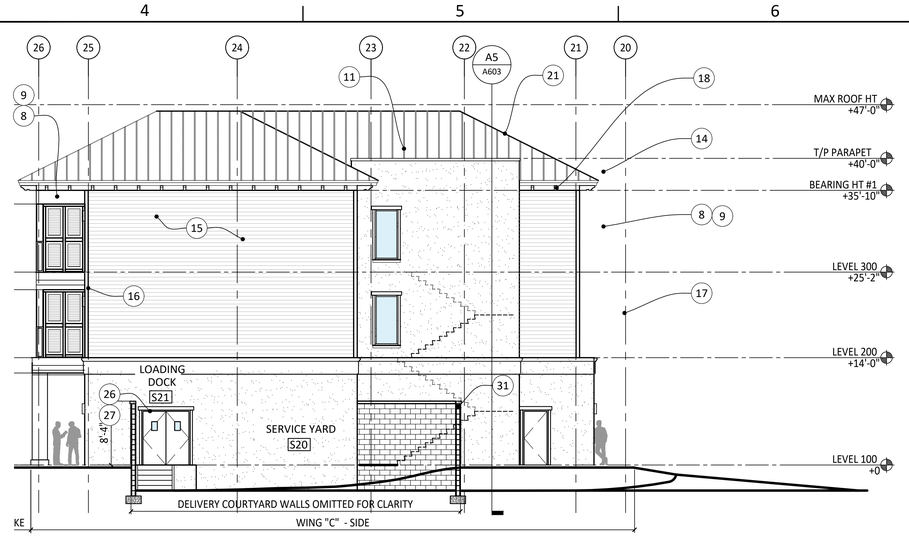

E4 EXTERIOR ELEVATION: EAST

A402 | 1/8" = 1'-0"

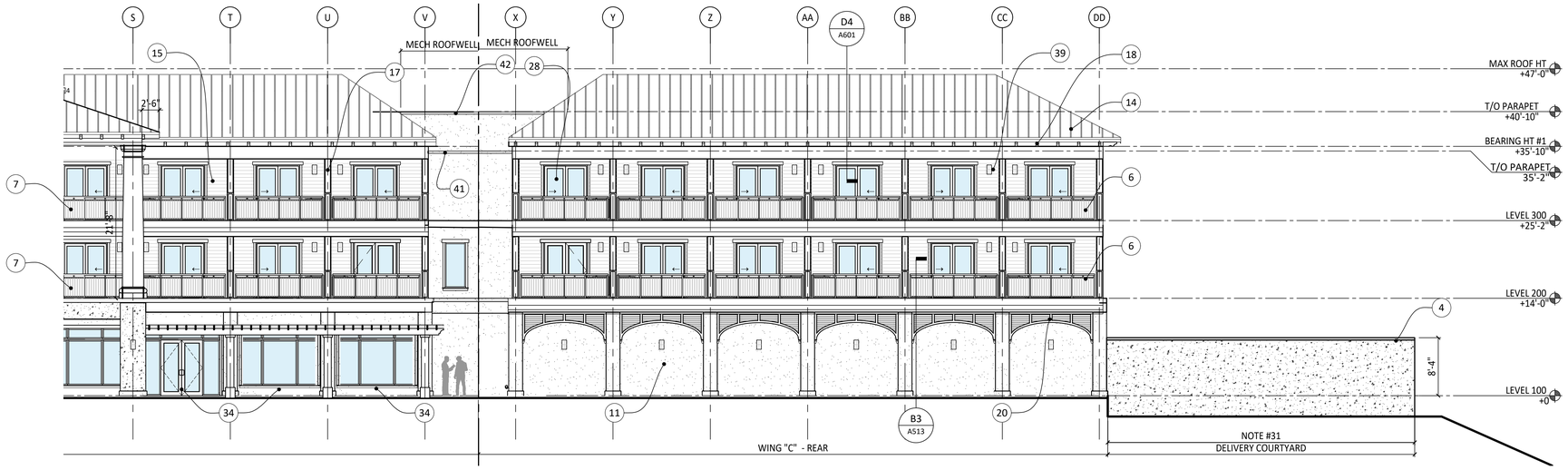

C1 EXTERIOR ELEVATION: REAR (SOUTH WEST)

A402 | 1/8" = 1'-0"



A1 EXTERIOR ELEVATION: REAR (SOUTH)

A402 | 1/8" = 1'-0"

SHEET NOTES / LEGEND

1. ~~03 0000_CONCRETE~~
2. 03 4900_GFRC COLUMN
3. ~~03 4900_GFRC PILASTER~~
4. 04 2000_CMU
5. 04 7200_CAST STONE MASONRY
6. 05 7200_ALUM GUARDRAIL, POST MTD @ JULIET BALCONY
7. 05 7200_ALUM GUARDRAIL, WALL MTD
8. 06 2013_FRAMING AT PRIVACY SCREEN @ BALCONY
9. 06 4919_PRIVACY SCREEN SHUTTER @ BALCONY
10. 06 7300_COMPOSITE DECKING (TREX) @ BALCONY EDGE
11. 07 2419_EIFS STOTHERM CI
12. 07 2419_EIFS HORIZONTAL BAND
13. 07 2419_EIFS CONTROL JOINT
14. 07 4110_METAL ROOF PANELS
15. 07 4646_FIBER-CEMENT LAP SIDING
16. 07 4646_FC TRIM
17. 07 4646_FC COLUMN, A3/A662
18. 07 4646_FC RAFTER TAIL, C6/A662
19. ~~07 4646_FC CRITERION BRACKET, C6/A662~~
20. 07 4646_FC RADIUS LOUVER, A4/A662
21. 07 6000_ALUM COPING AT PARAPET
22. 07 6000_ALUM FLASHING
23. ~~07 7123_GUTTER - ALUM/HALF ROUND, A6/A351~~
24. ~~07 7123_DOWNSPOUT - ALUM, A6/A351~~
25. 07 9210_FACADE SEALANTS
26. 08 1110_HM DOOR FRAME
27. 08 1110_HM DOOR
28. 08 3223_VINYL - SLIDING GLAZED DOORS
29. 08 5313_VINYL - IMPACT RESISTANT WINDOWS
30. 09 2423_PORTLAND CEMENT STUCCO
31. 09 2423_STUCCO ON CMU, B6/A681
32. 09 2423_STUCCO ON SHEATHING/MTL STUDS, D6/A681
33. 08 4113_ALUM-FRAMED WINDOW
34. 08 4114_ALUM FRAMED DOOR
35. 22 0000_LAMB'S TONGUE OVERFLOW, A4/A3511
36. 23 0000_EXHAUST GRILLE, SEE MECH
37. 23 0000_VTAC GRILLE, SEE MECH
38. 23 0000_ALUM LOUVER, SEE MECH
39. 26 0000_EXT LIGHT FIXTURE, WALL MTD, SEE ELEC
40. ~~32 3119_METAL SWINGING GATE, A5/A691 SIM~~
41. "FRONT" PARAPET "A" - ALUM COPING ON EIFS - TOP OF PARAPET, SEE ROOF PLAN
42. "BACK" PARAPET "B" - ALUM COPING ON EIFS - TOP OF PARAPET, SEE ROOF PLAN

LEGEND

METAL ROOFING, STANDING SEAM, 12" OC	LOUVERS
FC SIDING (HORIZ) 6" W.	GLAZING
EIFS	GLAZING SPANDREL
STUCCO	

GENERAL NOTES

A. SEE EXTERIOR MATERIAL COLORS: E1/A401

B. SEE ROOF PLANS ON SHEET A301 FOR EXTERIOR ELEVATION CALLOUTS

C. FLORIDA PRODUCT NUMBERS (NOA & FL): A4/G114

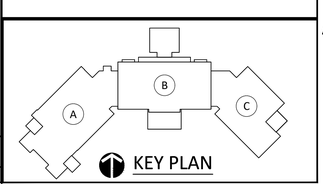

KUO DIEDRICH CHI
730 PEACHTREE STREET, NE
STUDIO 325
ATLANTA, GEORGIA 30308
678.244.6270
www.KDCarchitects.com

ARCHITECT:

ARCH. REG: AR91344

CONSULTANT:

REVISIONS

DATE:	DESCRIPTION:
10/18/24	SCHEMATIC DESIGN
6/5/25	DESIGN DEVELOPMENT
10/23/25	50% CONSTRUCTION DOCS
11/14/25	PERMIT SET

PROJECT:

SERENITY SEASIDE RESORT

BUILDING #1

THE INN

186 SOUTH BAY SHORE DRIVE, EASTPOINT, FL 32328

Serenity Seaside Operations, LLC
174 Watercolor Way, PMB 410
Santa Rosa Beach, Florida 32459

JOB NUMBER: 23019.1

DATE: --/--/----

TITLE: EXTERIOR ELEVATIONS: REAR

SHEET: A402

K:\Projects\23\23019\DWGs\Serenity_Bldg-1_Inn\Sheets\23019.1-A402.dwg Plotted: Nov 14, 2025 - 1:55pm by Cateblawrence

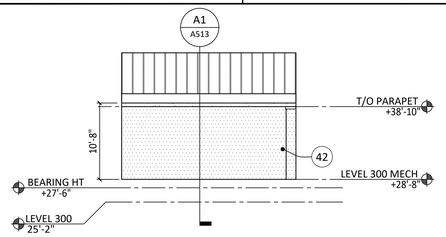

F1 ELEV EXT - FLAT ROOF #4 "WEST"

A403 | 1/8" = 1'-0"

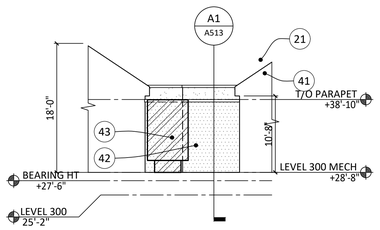

E1 ELEV EXT - FLAT ROOF #4 "SOUTH"

A403 | 1/8" = 1'-0"

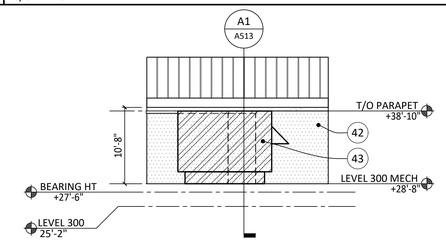

D1 ELEV EXT - FLAT ROOF #4 "EAST"

A403 | 1/8" = 1'-0"

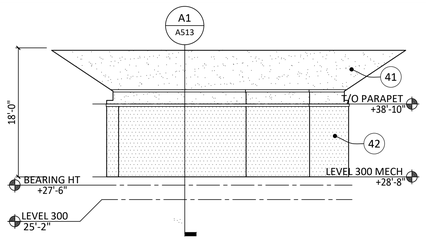

C1 ELEV EXT - FLAT ROOF #4 "NORTH"

A403 | 1/8" = 1'-0"

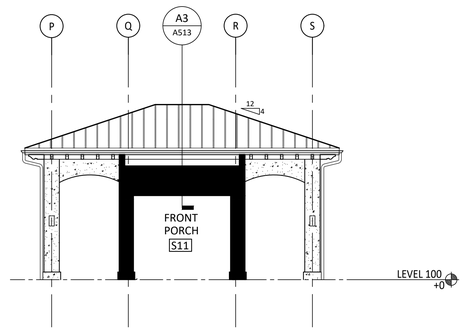

E3 EXT ELEV @ PORTE COCHERE "SOUTH"

A403 | 1/8" = 1'-0"

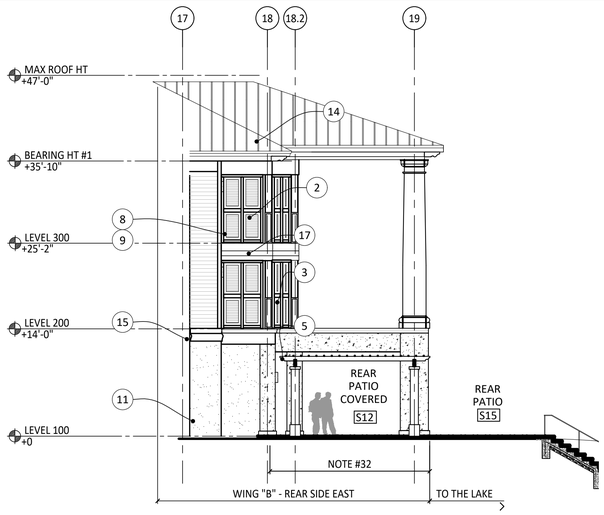

C3 EXTERIOR ELEVATION - REAR SIDE "EAST"

A403 | 1/8" = 1'-0"

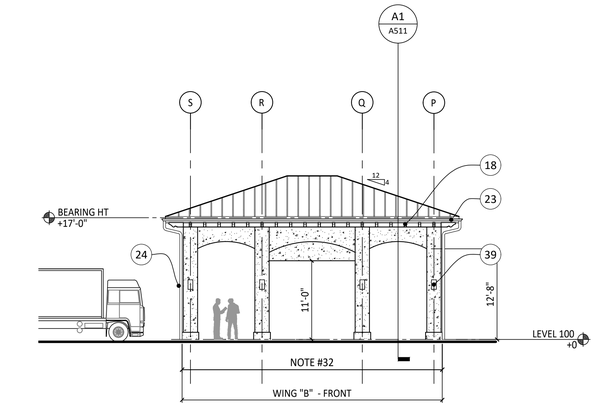

E5 EXT ELEV @ PORTE COCHERE: FRONT "NORTH"

A403 | 1/8" = 1'-0"

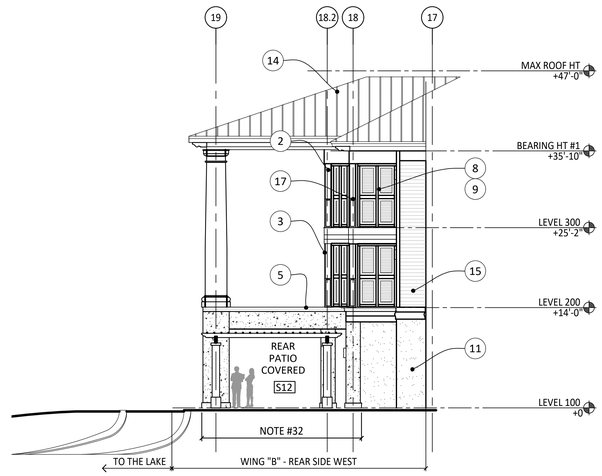

C5 EXTERIOR ELEVATION - REAR SIDE "WEST"

A403 | 1/8" = 1'-0"

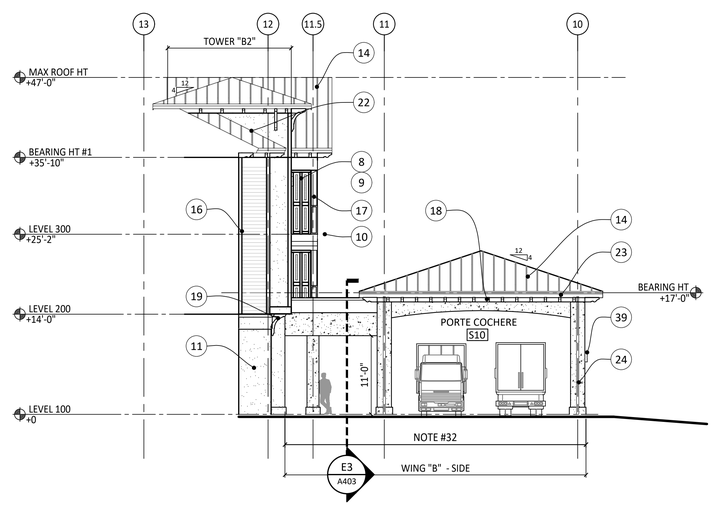

A1 EXTERIOR ELEVATION @ PORTE CHOCHERE "WEST"

A403 | 1/8" = 1'-0"

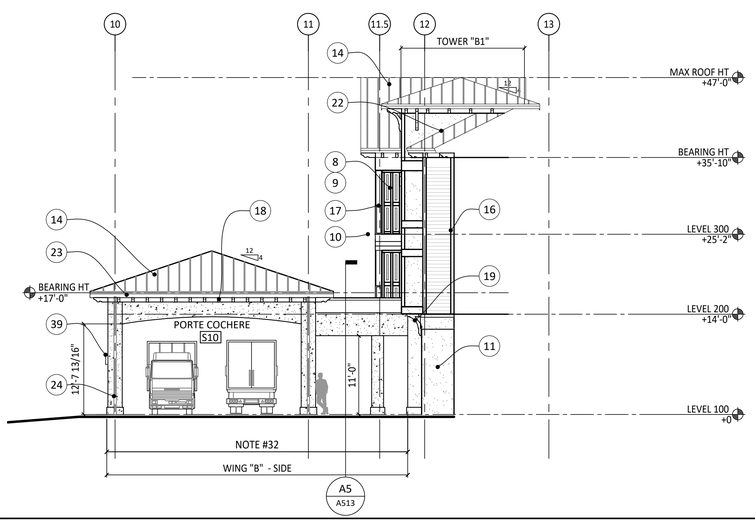

A4 EXTERIOR ELEVATION @ PORTE COCHERE "EAST"

A403 | 1/8" = 1'-0"

SHEET NOTES / LEGEND

1. ~~03 0000_CONCRETE~~
2. 03 4900_GFRC COLUMN
3. 03 4900_GFRC PILASTER
4. ~~04 2000_CMU~~
5. 04 7200_CAST STONE MASONRY
6. 05 7200_ALUM GUARDRAIL, POST MTD @ JULIET BALCONY
7. 05 7200_ALUM GUARDRAIL, WALL MTD
8. 06 2013_FRAMING AT PRIVACY SCREEN @ BALCONY
9. 06 4919_PRIVACY SCREEN SHUTTER @ BALCONY
10. 06 7300_COMPOSITE DECKING (TREX) @ BALCONY EDGE
11. 07 2419_EIFS STOTHERM CI
12. 07 2419_EIFS HORIZONTAL BAND
13. 07 2419_EIFS CONTROL JOINT
14. 07 4110_METAL ROOF PANELS
15. 07 4646_FIBER-CEMENT LAP SIDING
16. 07 4646_FC TRIM
17. 07 4646_FC COLUMN, A3/A662
18. 07 4646_FC RAFTER TAIL, C6/A662
19. 07 4646_FC EXTERIOR BRACKET, C6/A662
20. ~~07 4646_FC RADIUS LOUVER, A4/A662~~
21. 07 6000_ALUM COPING AT PARAPET
22. 07 6000_ALUM FLASHING
23. 07 7123_GUTTER - ALUM HALF ROUND, A6/A351
24. 07 7123_DOWNSPOUT - ALUM, A6/A351
25. 07 9210_FACADE SEALANTS
26. ~~08 1110_HM DOOR FRAME~~
27. ~~08 1110_HM DOOR~~
28. ~~08 3223_VINYL - SLIDING GLAZED DOORS~~
29. ~~08 5913_VINYL - IMPACT RESISTANT WINDOWS~~
30. 09 2423_PORTLAND CEMENT STUCCO
31. ~~09 2423_STUCCO ON CMU, D6/A681~~
32. 09 2423_STUCCO ON SHEATHING/MTL STUDS, D6/A681
33. ~~08 4113_ALUM FRAMED WINDOW~~
34. ~~08 4113_ALUM FRAMED DOOR~~
35. ~~22 0000_LAMB'S TONGUE OVERFLOW, A4/A5514~~
36. ~~23 0000_EXHAUST GRILLE, SEE MECH~~
37. ~~23 0000_VENT GRILLE, SEE MECH~~
38. ~~23 0000_ALUM LOUVER, SEE MECH~~
39. ~~26 0000_EXT LIGHT FIXTURE, WALL MTD, SEE ELEC~~
40. ~~32 2413_METAL SWINGING GATE, A5/A651 SIM~~
41. STUCCO
42. TPO
43. DOAS UNIT

LEGEND

METAL ROOFING, STANDING SEAM, 12" OC	LOUVERS
FC SIDING (HORIZ) 6" W.	GLAZING
EIFS	GLAZING SPANDREL
STUCCO	

GENERAL NOTES

A. SEE EXTERIOR MATERIAL COLORS: E1/A401

B. SEE ROOF PLANS ON SHEET A301 FOR EXTERIOR ELEVATION CALLOUTS

C. FLORIDA PRODUCT NUMBERS (NOA & FL): A4/G114

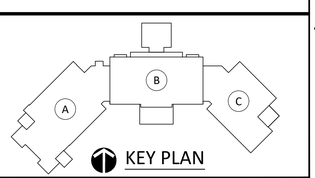

KUO DIEDRICH CHI
730 PEACHTREE STREET, NE
STUDIO 325
ATLANTA, GEORGIA 30308
678.244.6270
www.KDCarchitects.com

ARCHITECT:

ARCH. REG: AR91344

CONSULTANT:

REVISIONS

DATE:	DESCRIPTION:
10/18/24	SCHEMATIC DESIGN
6/5/25	DESIGN DEVELOPMENT
10/23/25	50% CONSTRUCTION DOCS
11/14/25	PERMIT SET

PROJECT:

SERENITY SEASIDE RESORT

BUILDING #1

THE INN

186 SOUTH BAY SHORE DRIVE, EASTPOINT, FL 32328

Serenity Seaside Operations, LLC
174 Watercolor Way, PMB 410
Santa Rosa Beach, Florida 32459

JOB NUMBER: 23019.1

DATE: --/--/----

TITLE: EXTERIOR ELEVATIONS: SIDES

SHEET: A403

K:\Projects\23\23019\DWGs\Serenity_Bldg-1_Inn\Sheets\23019.1-A403.dwg Plotted: Nov 13, 2025 - 6:19pm by ColebLawrence

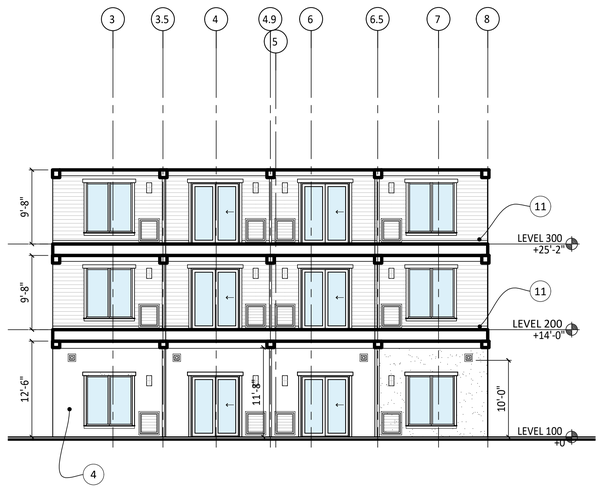

E1	EXTERIOR ELEVATION: WEST - WING "A"
A404	1/8" = 1'-0"

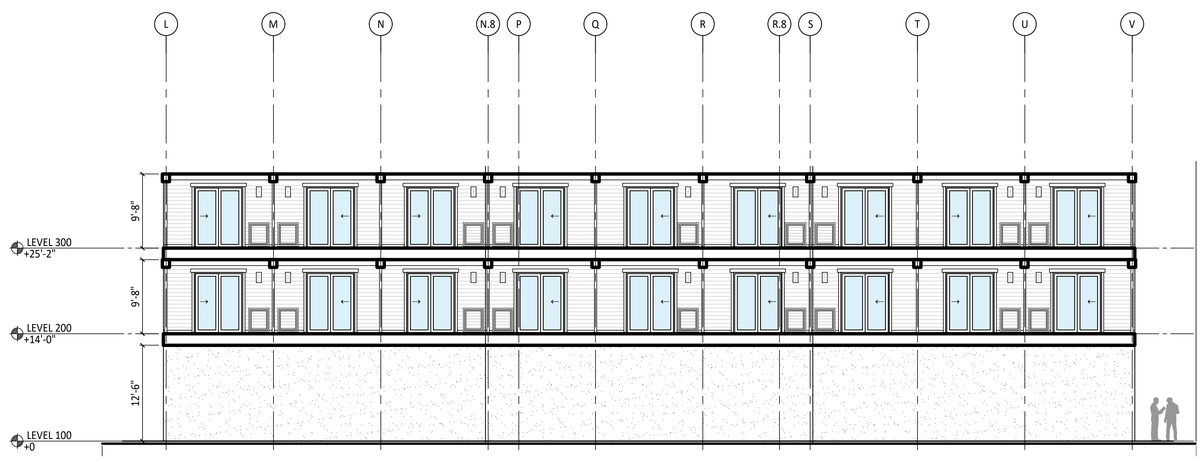

E3	EXTERIOR ELEVATION: NORTH - WING "B"
A404	1/8" = 1'-0"

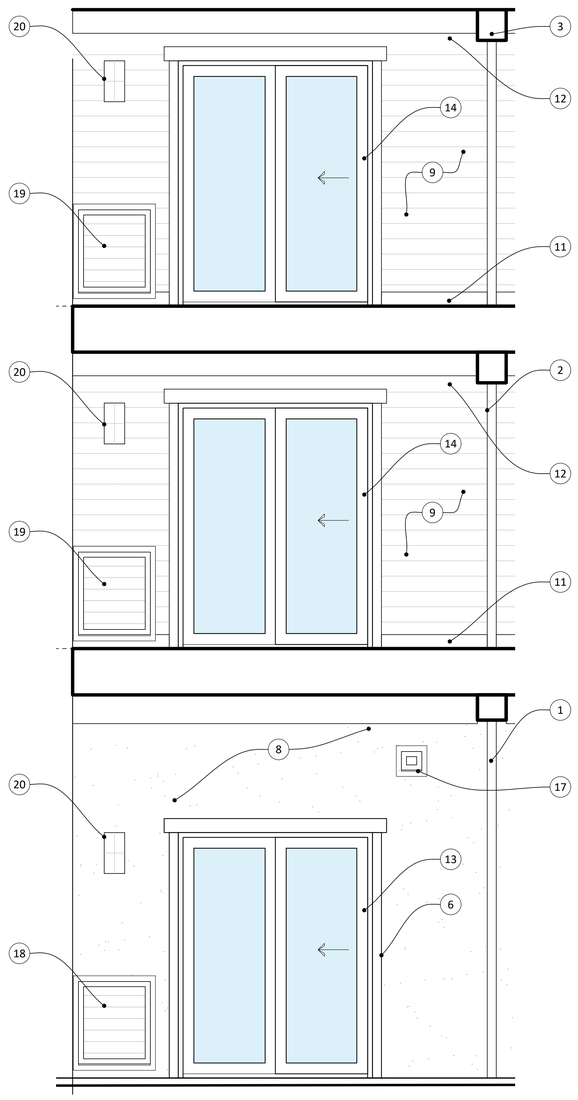

A1	DETAILED EXTERIOR ELEVATION: WEST - WING "A"
A404	1/2" = 1'-0"

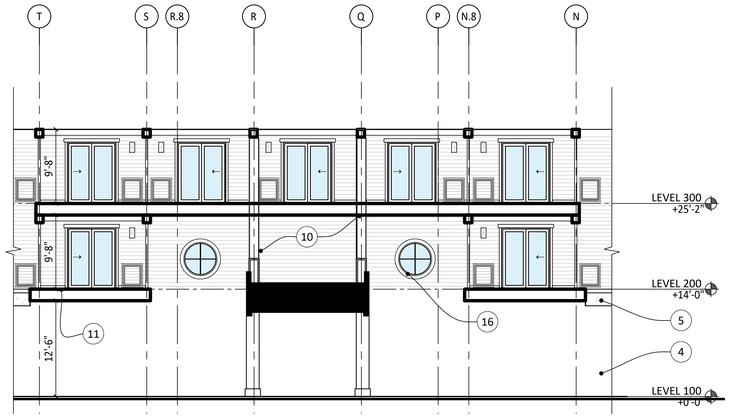

C3	EXTERIOR ELEVATION: SOUTH - WING "B"
A404	1/8" = 1'-0"

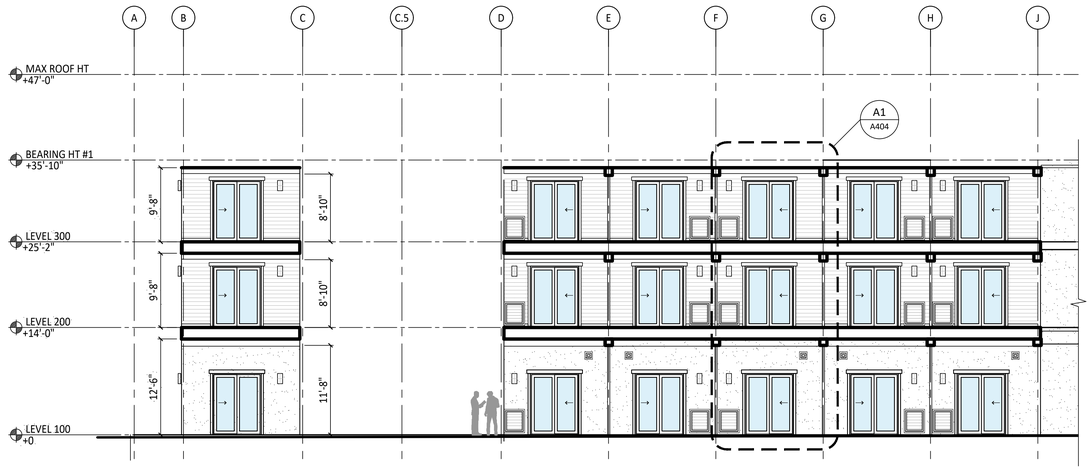

A3	EXTERIOR ELEVATION: SOUTH - WING "A"
A404	1/8" = 1'-0"

SHEET NOTES / LEGEND

1. 06 4919_PRIVACY SCREEN SHUTTER @ BALCONY, LEVEL 100
2. 06 4919_PRIVACY SCREEN SHUTTER @ BALCONY, LEVEL 200
3. 06 4919_PRIVACY SCREEN SHUTTER @ BALCONY, LEVEL 300
4. 07 2419_EIFS STOTHERM CI
5. 07 2419_EIFS HORIZONTAL BAND
6. 07 2419_EIFS TRIM AT SLIDING DOORS
7. NOT USED
8. 07 2419_EIFS CONTROL JOINT
9. 07 4646_FIBER-CEMENT LAP SIDING
10. 07 4646 FC WRAPPED COLUMN
11. 07 4646_FC TRIM, 5/4 x 6 BASE - HORIZ
12. 07 4646_FC TRIM, 5/4 x 6 CROWN - HORIZ
13. 08 3223_VINYL - SLIDING GLAZED DOORS - IN EIFS
14. 08 3223_VINYL - SLIDING GLAZED DOORS - IN FC SIDING
15. NOT USED
16. 08 4113_ALUM-FRAMED WINDOW - IN FC SIDING W/ FC TRIM
17. 23 0000_EXHAUST WALL GRILLE - IN EIFS, SEE MECH
18. 23 0000_VTAC WALL GRILLE - IN EIFS, SEE MECH
19. 23 0000_VTAC WALL GRILLE - IN FC SIDING, SEE MECH
20. 26 0000_EXT LIGHT FIXTURE, WALL MTD, SEE ELEC

LEGEND

METAL ROOFING, STANDING SEAM, 12" OC	LOUVERS
FC SIDING (HORIZ) 6" W.	GLAZING
EIFS	GLAZING SPANDREL
STUCCO	

GENERAL NOTES

A. SEE EXTERIOR MATERIAL COLORS: E1/A401

B. SEE ROOF PLANS ON SHEET A301 FOR EXTERIOR ELEVATION CALLOUTS

C. FLORIDA PRODUCT NUMBERS (NOA & FL): A4/G114

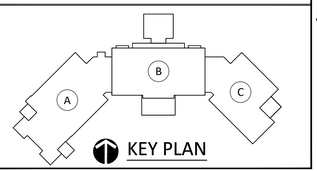

KEY PLAN

KUO DIEDRICH CHI
730 PEACHTREE STREET, NE
STUDIO 325
ATLANTA, GEORGIA 30308
678.244.6270
www.KDCarchitects.com

ARCHITECT:

ARCH. REG: AR91344

CONSULTANT:

REVISIONS

DATE:	DESCRIPTION:
10/18/24	SCHEMATIC DESIGN
6/5/25	DESIGN DEVELOPMENT
10/23/25	50% CONSTRUCTION DOCS
11/14/25	PERMIT SET

PROJECT:

SERENITY SEASIDE RESORT

BUILDING #1

THE INN

186 SOUTH BAY SHORE DRIVE, EASTPOINT, FL 32328

Serenity Seaside Operations, LLC
174 Watercolor Way, PMB 410
Santa Rosa Beach, Florida 32459

JOB NUMBER: 23019.1

DATE: --/--/----

TITLE: EXTERIOR ELEVATIONS: @ GUEST ROOMS

SHEET: A404

K:\Projects\23\23019\DWGs\Serenity_Bldg-1_Inn\Sheets\23019.1-A404.dwg Plotted: Nov 13, 2025 - 6:19pm by ColeBlawrence

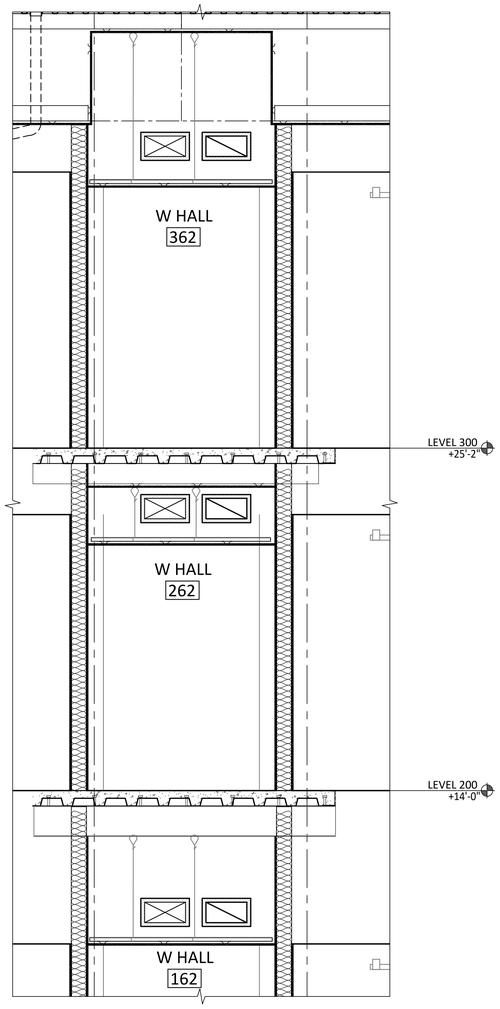

C1 SECTION @ GUEST ROOM HALL
A501 1" = 1'-0"

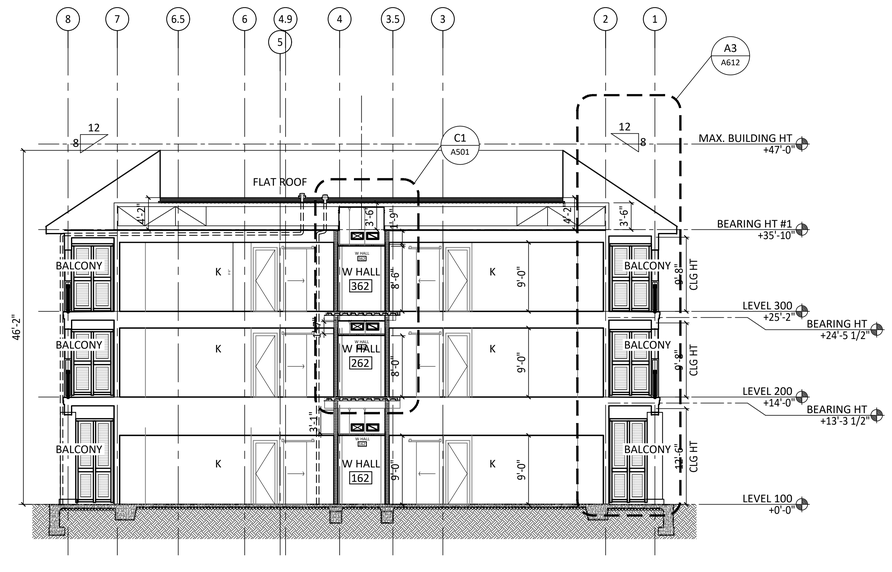

C3 BUILDING SECTION #A1
A501 1/8" = 1'-0"



A2 BUILDING SECTION #A2
A501 1/8" = 1'-0"

SHEET NOTES / LEGEND

1. -

GENERAL NOTES

A. GENERAL NOTES:
B. (APPLIES TO ALL WALL & BUILDING SECTION & DETAIL SHEETS)

C. STRUCTURAL STEEL, ROOF TRUSSES, CONCRETE FOUNDATIONS, & LINTELS & HEADERS AT OPENINGS SHOWN IN ARCHITECTURAL WALL SECTIONS ARE DRAWN GRAPHICALLY - REFER TO STRUCTURAL DRAWINGS FOR EXACT SIZES, REINFORCING, MISC BRACING MEMBERS & ATTACHMENTS

D. EXPOSED METAL FLASHING IS ALUM., UNLESS NOTED OTHERWISE

E. PROVIDE STAINLESS STEEL DRIP EDGE WHERE THRU WALL FLASHING DRIP WOULD BE EXPOSED TO SUN

F. AIR & WATER MEMBERANE ON ALL SHEATHING (AT FC SIDING) IS WRAPSHIELD SA SELF ADHERED BY VAPROSHIELD

F. FLUID APPLIED WATERPROOFING ON ALL SHEATHING (AT EIFS)

G. SHEET MEMBRANE FLASHINGS & WATERPROOFING SHOULD BE TERMINATED WITH A CONTINUOUS TERMINATION BAR & SEALED

H. ALL INSULATING MATERIALS SHALL HAVE A FLAMESPREAD INDEX OF NOT MORE THAN 25 & A SMOKE-DEVELOPED INDEX OF NOT MORE THAN 450 AS DETERMINED IN ACCORDANCE W/ ASTM E 84.

I. BATT INSULATION IN EXTERIOR WALLS, REFER TO SPEC 07 21000 FOR MIN. THERMAL VALUE : R-19

J. BATT INSULATION IN CEILINGS / SOFFITS / ATTIC, REFER TO SPEC 07 2100 FOR THERMAL VALUE : R-38

K. INSULATION ABOVE ROOF DECK THERMAL VALUE: R-25ci

L. METAL ROOF DETAILS, SHEET A361

M. FLAT ROOF DETAILS, SHEET A371

N. CAST STONE DETAILS, SHEET A651

O. FIBER CEMENT DETAILS, SHEET A671

P. EIFS DETAILS, SHEETS A673 & A674

Q. STUCCO DETAILS, SHEETS A681 & A682

R. SITE DETAILS, SHEETS A691 & A692

S. INTERIOR PARTITION DETAILS, SHEET A851

T. UL PENETRATIONS & ASSEMBLIES, SHEETS A881 - A885

U. ENERGY CODE NOTES, SHEET G103

KUO DIEDRICH CHI
730 PEACHTREE STREET, NE
STUDIO 325
ATLANTA, GEORGIA 30308
678.244.6270
www.KDCarchitects.com

ARCHITECT:

ARCH. REG: AR91344

CONSULTANT:

REVISIONS

DATE:	DESCRIPTION:
10/18/24	SCHEMATIC DESIGN
6/5/25	DESIGN DEVELOPMENT
10/23/25	50% CONSTRUCTION DOCS
11/14/25	PERMIT SET

PROJECT:

SERENITY SEASIDE RESORT

BUILDING #1

THE INN

186 SOUTH BAY SHORE DRIVE, EASTPOINT, FL 32328

Serenity Seaside Operations, LLC
174 Watercolor Way, PMB 410
Santa Rosa Beach, Florida 32459

JOB NUMBER: 23019.1

DATE: --/--/----

TITLE: BUILDING SECTIONS: WING "A"

SHEET: A501

K:\Projects\23\23019\DWGs\Serenity_Bldg-1_Inn\Sheets\23019.1-A501.dwg Plotted: Nov 14, 2025 - 2:44pm by lshwor

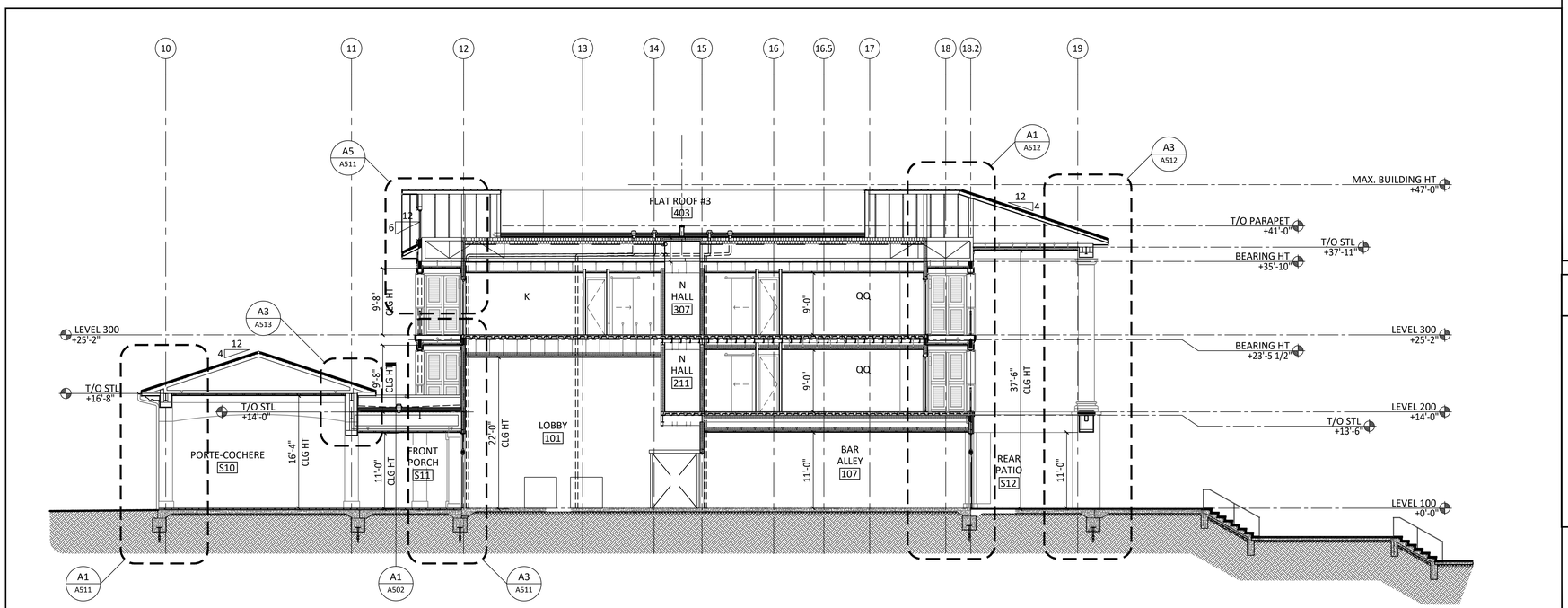

C1	BUILDING SECTION #B2
A502	1/8" = 1'-0"

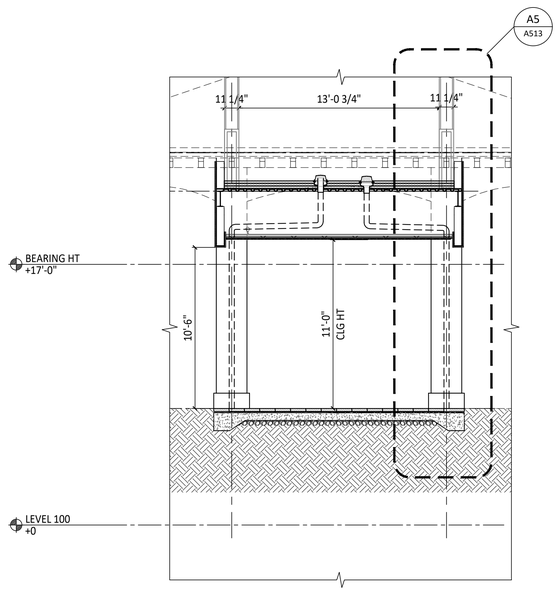

A1	BUILDING SECTION - FRONT PORCH
A502	1/4" = 1'-0"

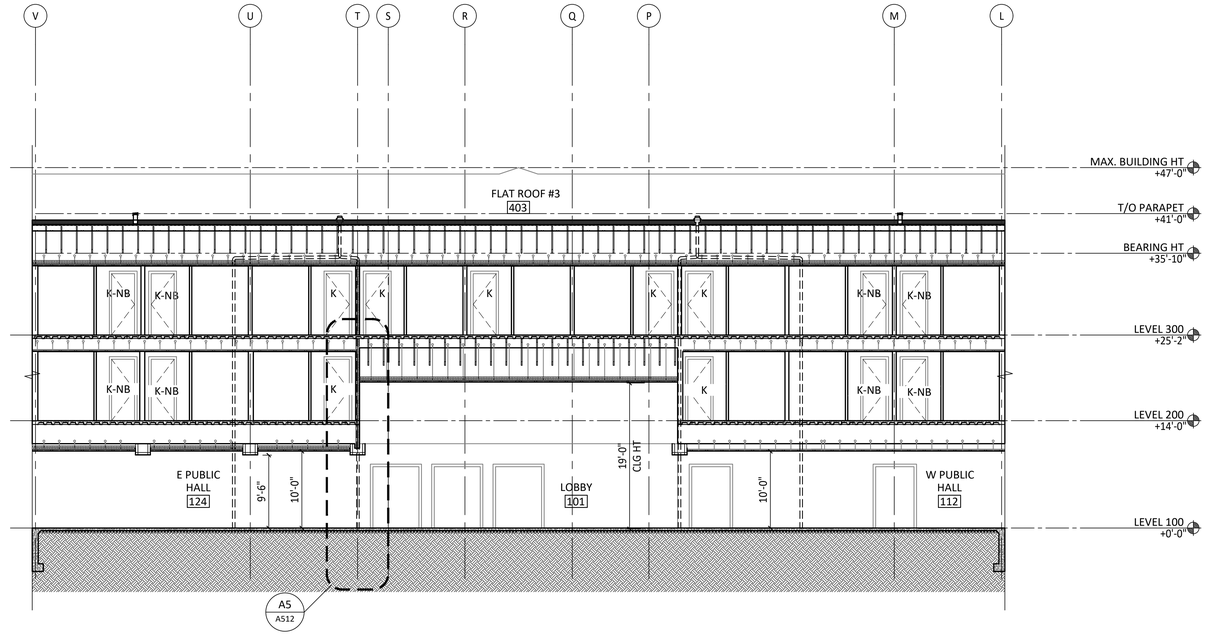

A3	BUILDING SECTION #B1
A502	1/8" = 1'-0"

SHEET NOTES / LEGEND

1. -

GENERAL NOTES

A. ALL SECTIONS & DETAILS - REFERENCE GENERAL NOTES ON SHEET A501
B. METAL ROOF DETAILS, SHEET A361
C. FLAT ROOF DETAILS, SHEET A371
D. FIBER CEMENT DETAILS, SHEET A671
E. EIFS DETAILS, SHEETS A673 & A674
F. STUCCO DETAILS, SHEETS A681 & A682
G. SITE DETAILS, SHEETS A691 & A692
H. INTERIOR PARTITION DETAILS, SHEET A851
I. UL PENETRATIONS & ASSEMBLIES, SHEETS A881 - A885
J. ENERGY CODE NOTES, SHEET G103

KUO DIEDRICH CHI

730 PEACHTREE STREET, NE
STUDIO 325
ATLANTA, GEORGIA 30308
678.244.6270

www.KDCarchitects.com

ARCHITECT:

ARCH. REG: AR91344

CONSULTANT:

REVISIONS

DATE:	DESCRIPTION:
10/18/24	SCHEMATIC DESIGN
6/5/25	DESIGN DEVELOPMENT
10/23/25	50% CONSTRUCTION DOCS
11/14/25	PERMIT SET

PROJECT:

SERENITY SEASIDE RESORT

BUILDING #1

THE INN

186 SOUTH BAY SHORE DRIVE, EASTPOINT, FL 32328

Serenity Seaside Operations, LLC
174 Watercolor Way, PMB 410
Santa Rosa Beach, Florida 32459

JOB NUMBER: 23019.1

DATE: --/--/----

TITLE: BUILDING SECTIONS: WING "B"

SHEET: A502

K:\Projects\23\23019\DWGs\Serenity_Bldg-1_Inn\Sheets\23019.1-A502.dwg Plotted: Nov 14, 2025 - 2:25pm by lshwar

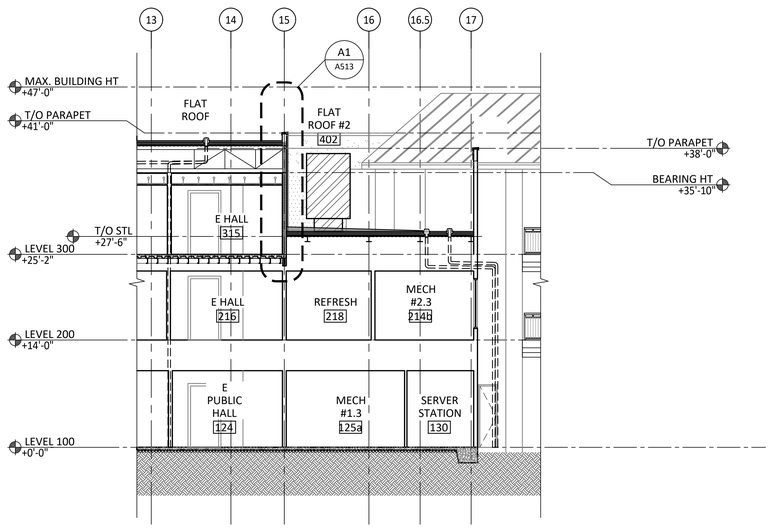

E1	BUILDING SECTION @ FLAT ROOF #2
A503	1/8" = 1'-0"

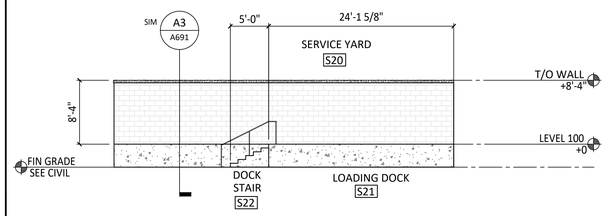

E3	ELEVATION @ LOADING DECK
A503	3/4" = 1'-0"

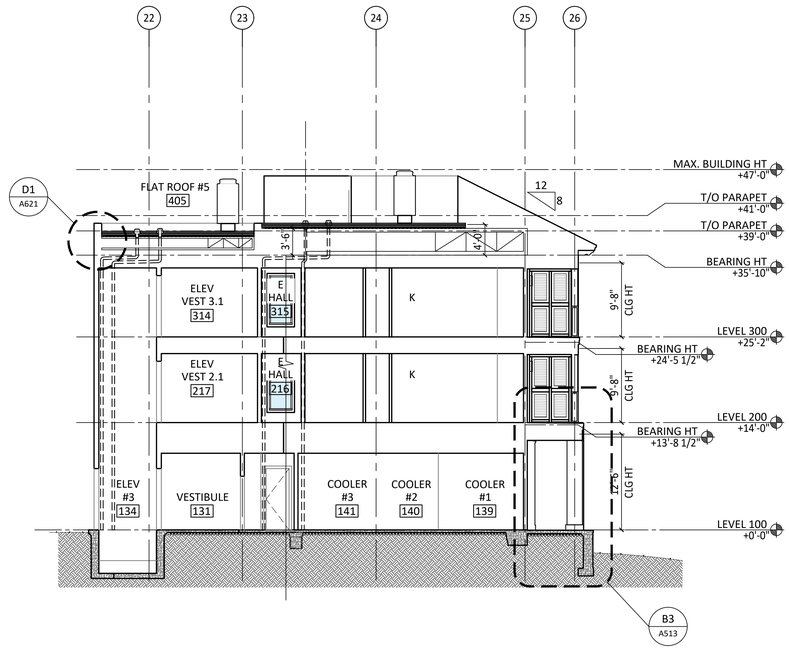

C3	BUILDING SECTION #C1
A503	3/4" = 1'-0"

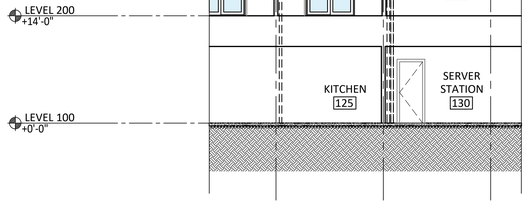

C1	BUILDING SECTION @ FLAT ROOF #2
A503	1/8" = 1'-0"

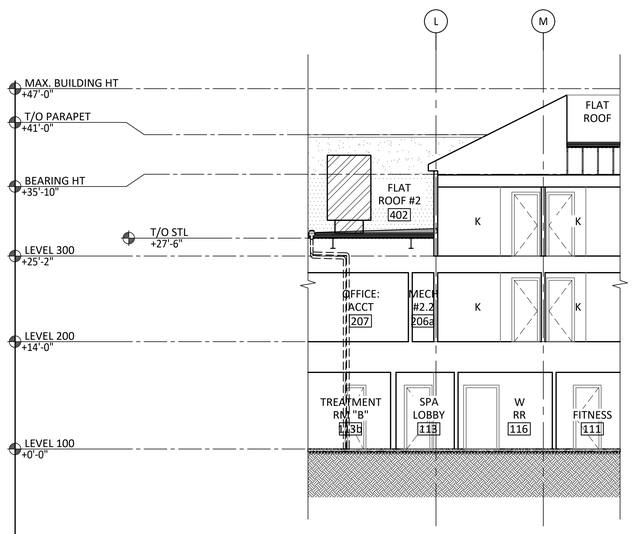

A1	BUILDING SECTION @ FLAT ROOF #2
A503	1/8" = 1'-0"

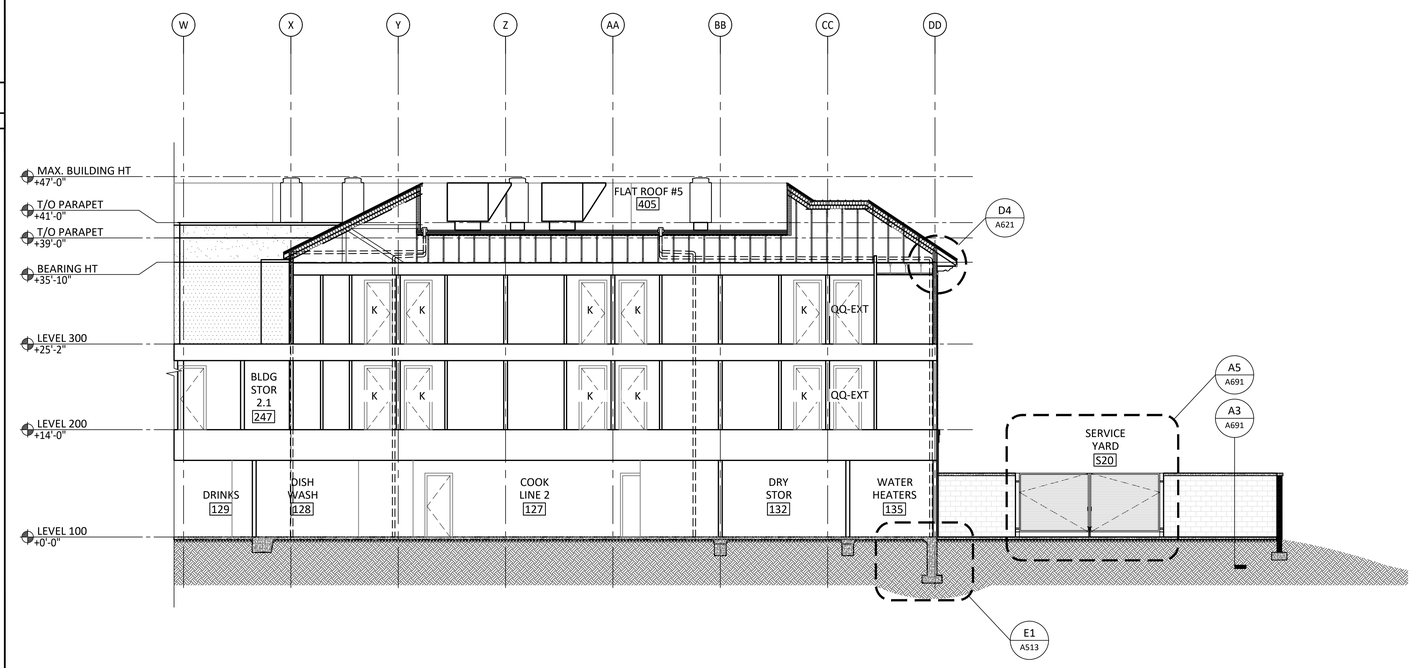

A3	BUILDING SECTION #C2
A503	1/8" = 1'-0"

SHEET NOTES / LEGEND

1. -

GENERAL NOTES

A. ALL SECTIONS & DETAILS - REFERENCE GENERAL NOTES ON SHEET A501
B. METAL ROOF DETAILS, SHEET A361
C. FLAT ROOF DETAILS, SHEET A371
D. FIBER CEMENT DETAILS, SHEET A671
E. EIFS DETAILS, SHEETS A673 & A674
F. STUCCO DETAILS, SHEETS A681 & A682
G. SITE DETAILS, SHEETS A691 & A692
H. INTERIOR PARTITION DETAILS, SHEET A851
I. UL PENETRATIONS & ASSEMBLIES, SHEETS A881 - A885
J. ENERGY CODE NOTES, SHEET G103

KUO DIEDRICH CHI
730 PEACHTREE STREET, NE
STUDIO 325
ATLANTA, GEORGIA 30308
678.244.6270
www.KDCarchitects.com

ARCHITECT:

ARCH. REG: AR91344

CONSULTANT:

REVISIONS

DATE:	DESCRIPTION:
10/18/24	SCHEMATIC DESIGN
6/5/25	DESIGN DEVELOPMENT
10/23/25	50% CONSTRUCTION DOCS
11/14/25	PERMIT SET

PROJECT:

SERENITY SEASIDE RESORT

BUILDING #1

THE INN

186 SOUTH BAY SHORE DRIVE, EASTPOINT, FL 32328

Serenity Seaside Operations, LLC
174 Watercolor Way, PMB 410
Santa Rosa Beach, Florida 32459

JOB NUMBER: 23019.1

DATE: --/--/----

TITLE: BUILDING SECTIONS: WING "C"

SHEET: A503

K:\Projects\23\23019\DWGs\Serenity_Bldg-1_Inn\Sheets\23019.1-A503.dwg Plotted: Nov 14, 2025 - 1:55pm by ColebLawrence

GENERAL NOTES

A. ALL SECTIONS & DETAILS - REFERENCE GENERAL NOTES ON SHEET A501
B. METAL ROOF DETAILS, SHEET A361
C. FLAT ROOF DETAILS, SHEET A371
D. FIBER CEMENT DETAILS, SHEET A671
E. EIFS DETAILS, SHEETS A673 & A674
F. STUCCO DETAILS, SHEETS A681 & A682
G. SITE DETAILS, SHEETS A691 & A692
H. INTERIOR PARTITION DETAILS, SHEET A851
I. UL PENETRATIONS & ASSEMBLIES, SHEETS A881 - A885
J. ENERGY CODE NOTES, SHEET G103

SHEET NOTES / LEGEND

1. -

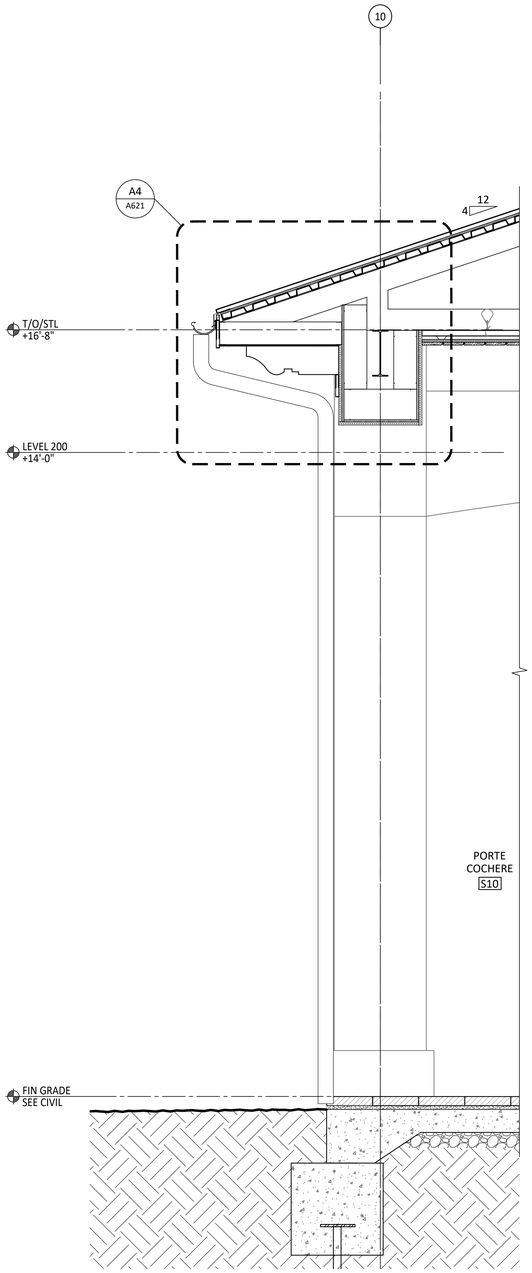

A1 WALL SECTION @ PORTE COCHERE
A511 3/4" = 1'-0"

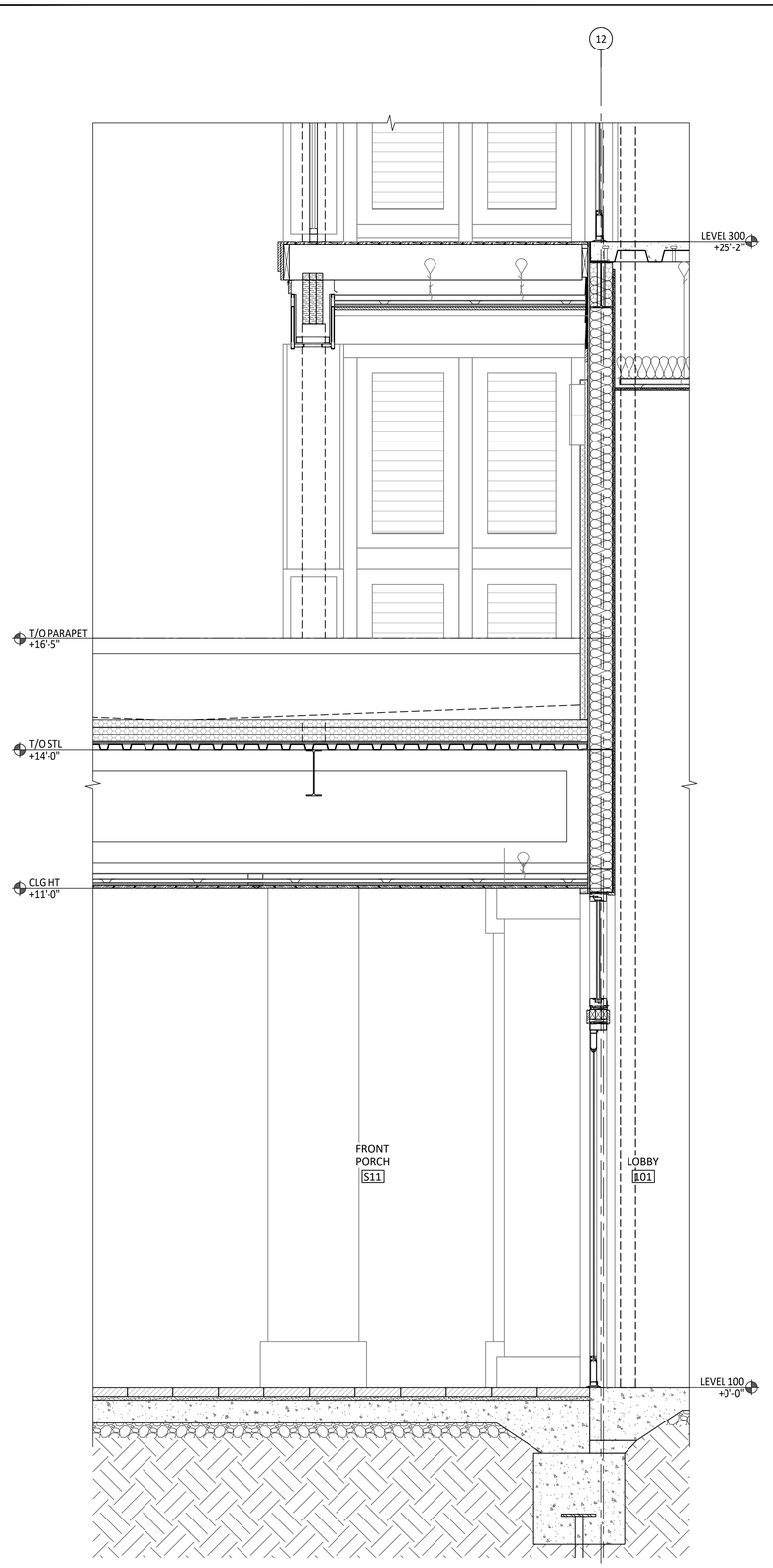

A3 WALL SECTION @ PORTE COCHERE / BALCONY
A511 3/4" = 1'-0"

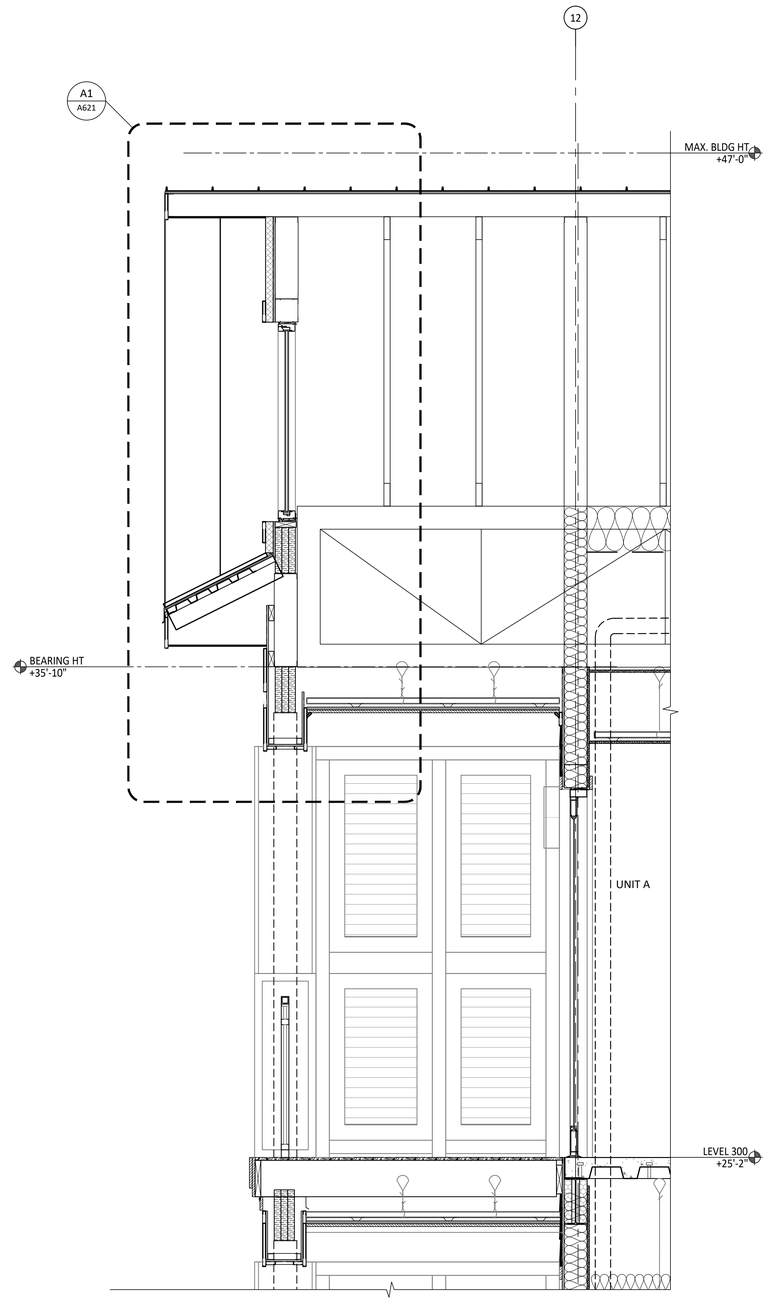

A5 WALL SECTION @ GABLE - FRONT BALCONY
A511 3/4" = 1'-0"

KUO DIEDRICH CHI
730 PEACHTREE STREET, NE
STUDIO 325
ATLANTA, GEORGIA 30308
678.244.6270
www.KDCarchitects.com

ARCHITECT:

ARCH. REG: AR91344

CONSULTANT:

REVISIONS

DATE:	DESCRIPTION:
10/18/24	SCHEMATIC DESIGN
6/5/25	DESIGN DEVELOPMENT
10/23/25	50% CONSTRUCTION DOCS
11/14/25	PERMIT SET

PROJECT:

SERENITY SEASIDE RESORT

BUILDING #1

THE INN

186 SOUTH BAY SHORE DRIVE, EASTPOINT, FL 32328

Serenity Seaside Operations, LLC
174 Watercolor Way, PMB 410
Santa Rosa Beach, Florida 32459

JOB NUMBER: 23019.1

DATE: --/--/----

TITLE: WALL SECTIONS

SHEET: A511

K:\Projects\23\23019\DWGs\Serenity_Bldg-1_Inn\Sheets\23019.1-A511.dwg Plotted: Nov 14, 2025 – 1:55pm by CalebLawrence

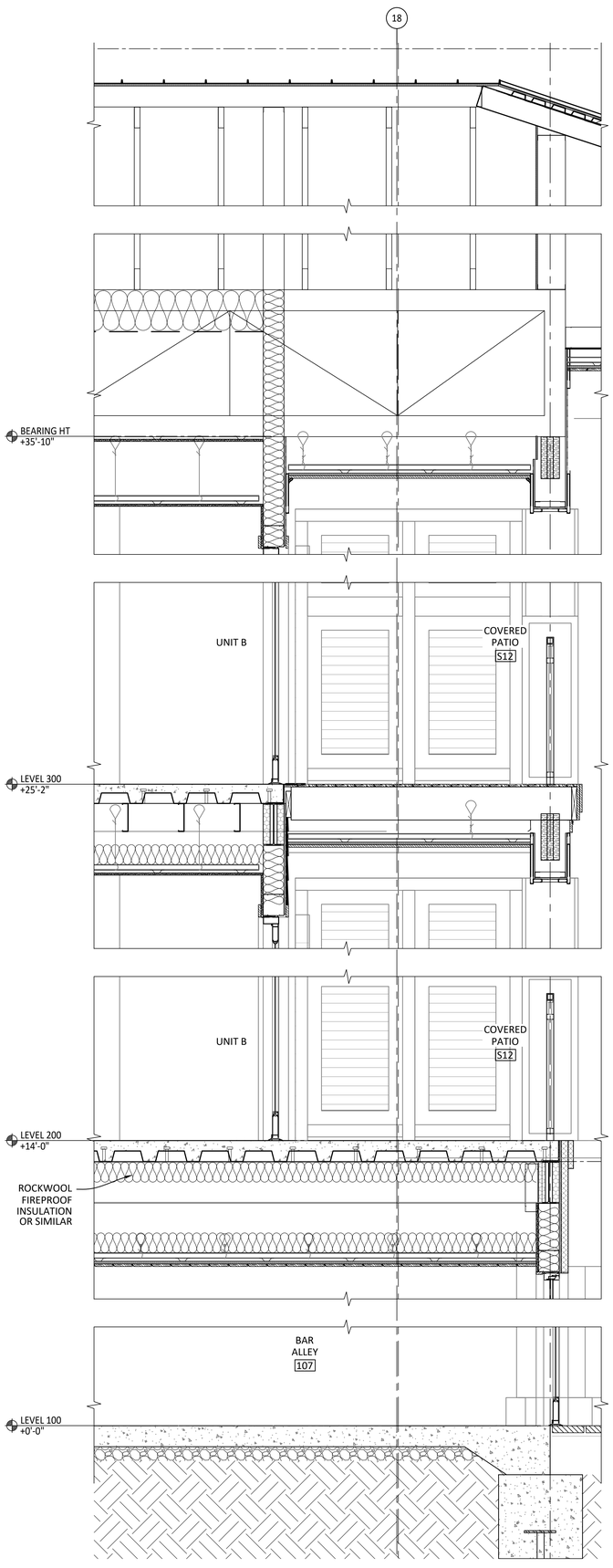

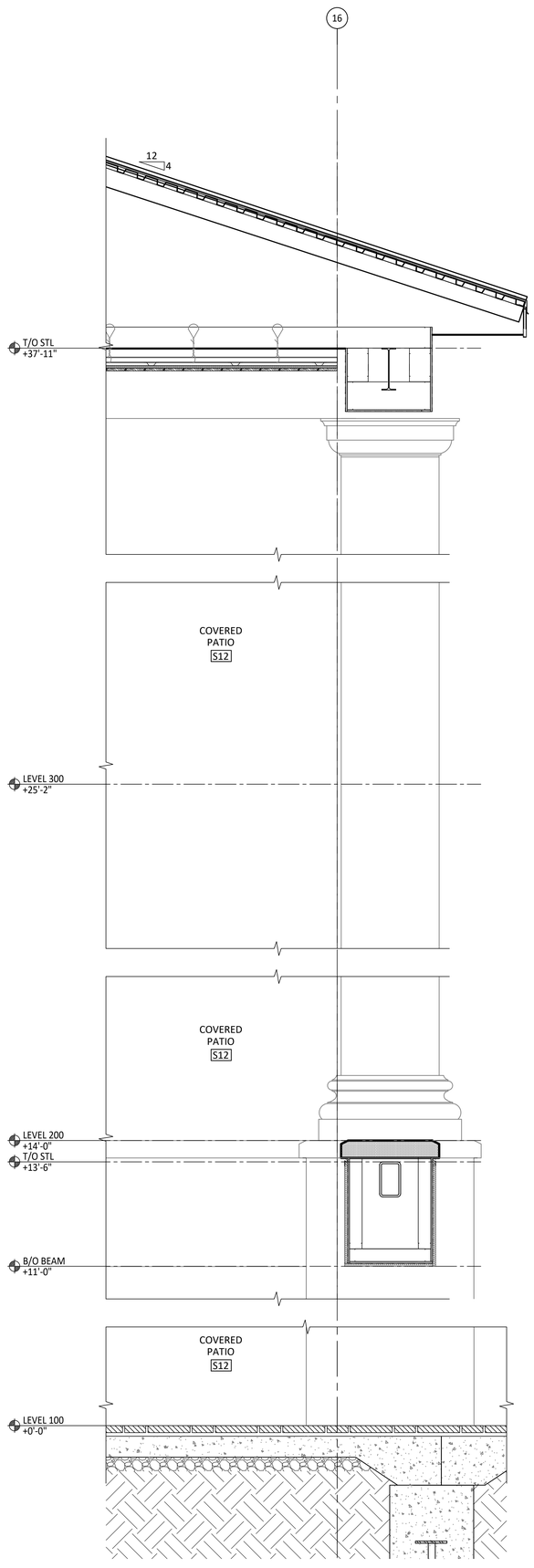

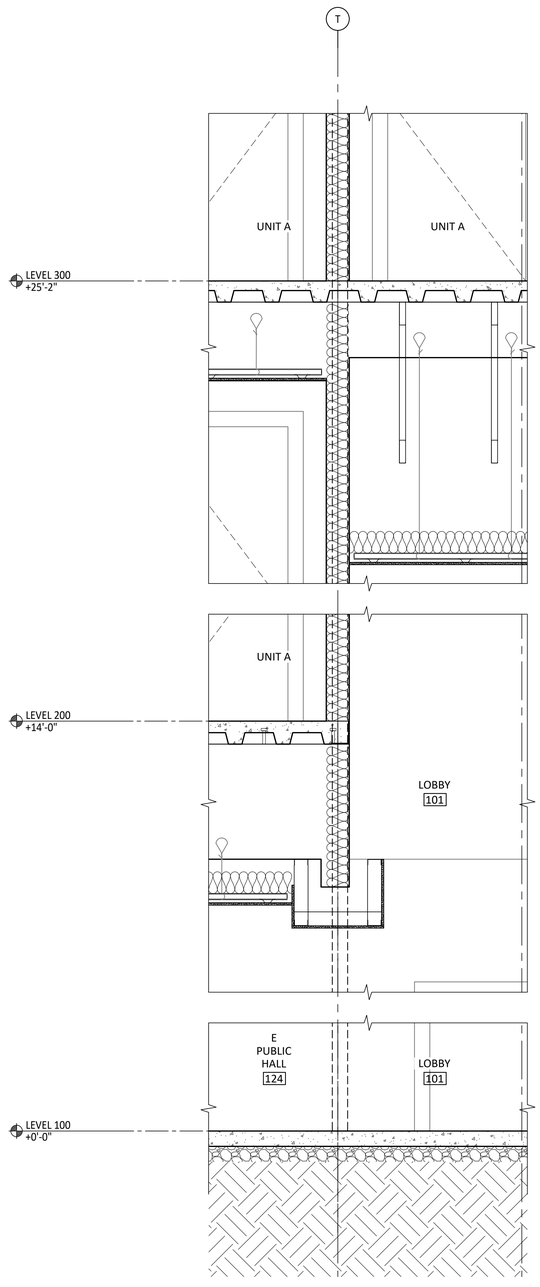

A1	WALL SECTION @ REAR GABLE
A512	3/4" = 1'-0"

A3	WALL SECTION @ REAR CANOPY
A512	3/4" = 1'-0"

A5	WALL SECTION @ LOBBY
A512	3/4" = 1'-0"

GENERAL NOTES

- A. ALL SECTIONS & DETAILS - REFERENCE GENERAL NOTES ON SHEET A501
- B. METAL ROOF DETAILS, SHEET A361
- C. FLAT ROOF DETAILS, SHEET A371
- D. FIBER CEMENT DETAILS, SHEET A671
- E. EIFS DETAILS, SHEETS A673 & A674
- F. STUCCO DETAILS, SHEETS A681 & A682
- G. SITE DETAILS, SHEETS A691 & A692
- H. INTERIOR PARTITION DETAILS, SHEET A851
- I. UL PENETRATIONS & ASSEMBLIES, SHEETS A881 - A885
- J. ENERGY CODE NOTES, SHEET G103

SHEET NOTES / LEGEND

1. ALUM JULIET BALCONY, POST MOUNTED TO EXT. WALL

KUO DIEDRICH CHI

730 PEACHTREE STREET, NE
STUDIO 325
ATLANTA, GEORGIA 30308
678.244.6270

www.KDCarchitects.com

ARCHITECT:

ARCH. REG: AR91344

CONSULTANT:

REVISIONS

DATE:	DESCRIPTION:
10/18/24	SCHEMATIC DESIGN
6/5/25	DESIGN DEVELOPMENT
10/23/25	50% CONSTRUCTION DOCS
11/14/25	PERMIT SET

PROJECT:

SERENITY SEASIDE RESORT

BUILDING #1

THE INN

186 SOUTH BAY SHORE DRIVE, EASTPOINT, FL 32328

Serenity Seaside Operations, LLC
174 Watercolor Way, PMB 410
Santa Rosa Beach, Florida 32459

JOB NUMBER: 23019.1

DATE: --/--/----

TITLE: WALL SECTIONS

SHEET: A512

K:\Projects\23\23019\DWGs\Serenity_Bldg-1_Inn\Sheets\23019.1-A512.dwg Plotted: Nov 14, 2025 - 1:56pm by ColebLawrence

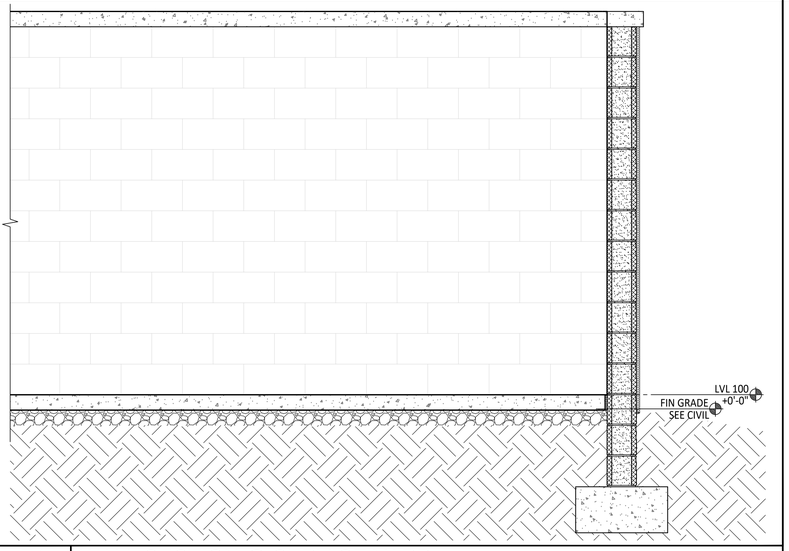

E1 | WALL SECTION @ SERVICE YARD

A513 | 3/4" = 1'-0"

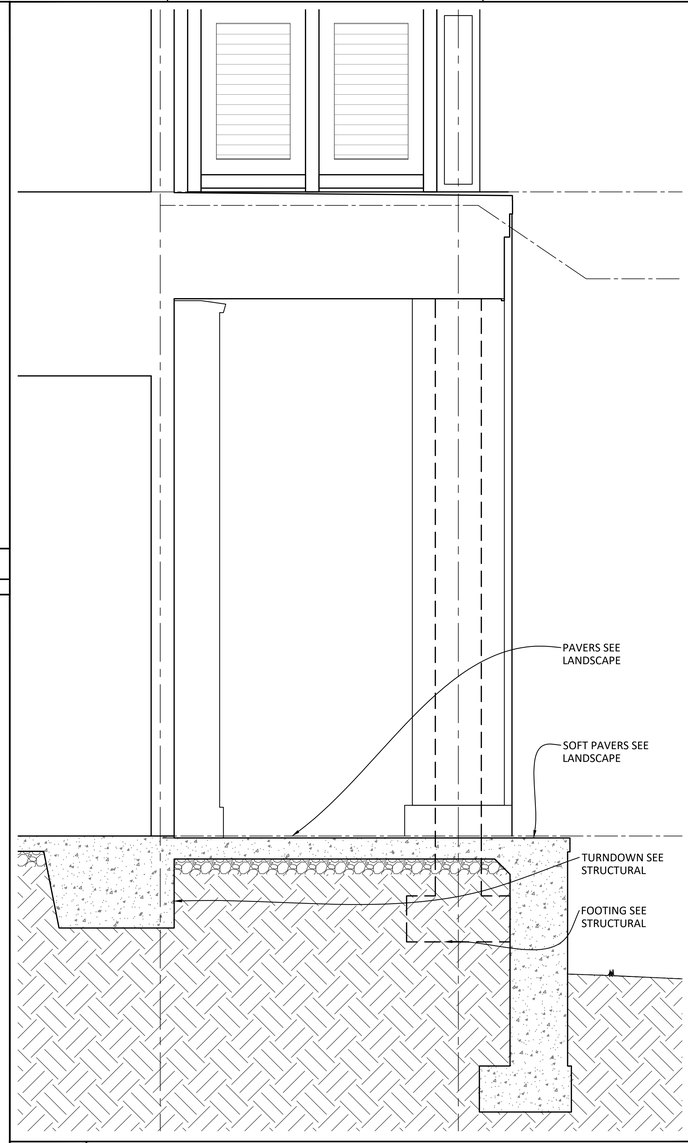

C3 | WALL SECTION @ WING "C"

A513 | 3/4" = 1'-0"

GENERAL NOTES

- A. ALL SECTIONS & DETAILS - REFERENCE GENERAL NOTES ON SHEET A501
- B. METAL ROOF DETAILS, SHEET A361
- C. FLAT ROOF DETAILS, SHEET A371
- D. FIBER CEMENT DETAILS, SHEET A671
- E. EIFS DETAILS, SHEETS A673 & A674
- F. STUCCO DETAILS, SHEETS A681 & A682
- G. SITE DETAILS, SHEETS A691 & A692
- H. INTERIOR PARTITION DETAILS, SHEET A851
- I. UL PENETRATIONS & ASSEMBLIES, SHEETS A881 - A885
- J. ENERGY CODE NOTES, SHEET G103

SHEET NOTES / LEGEND

1. -

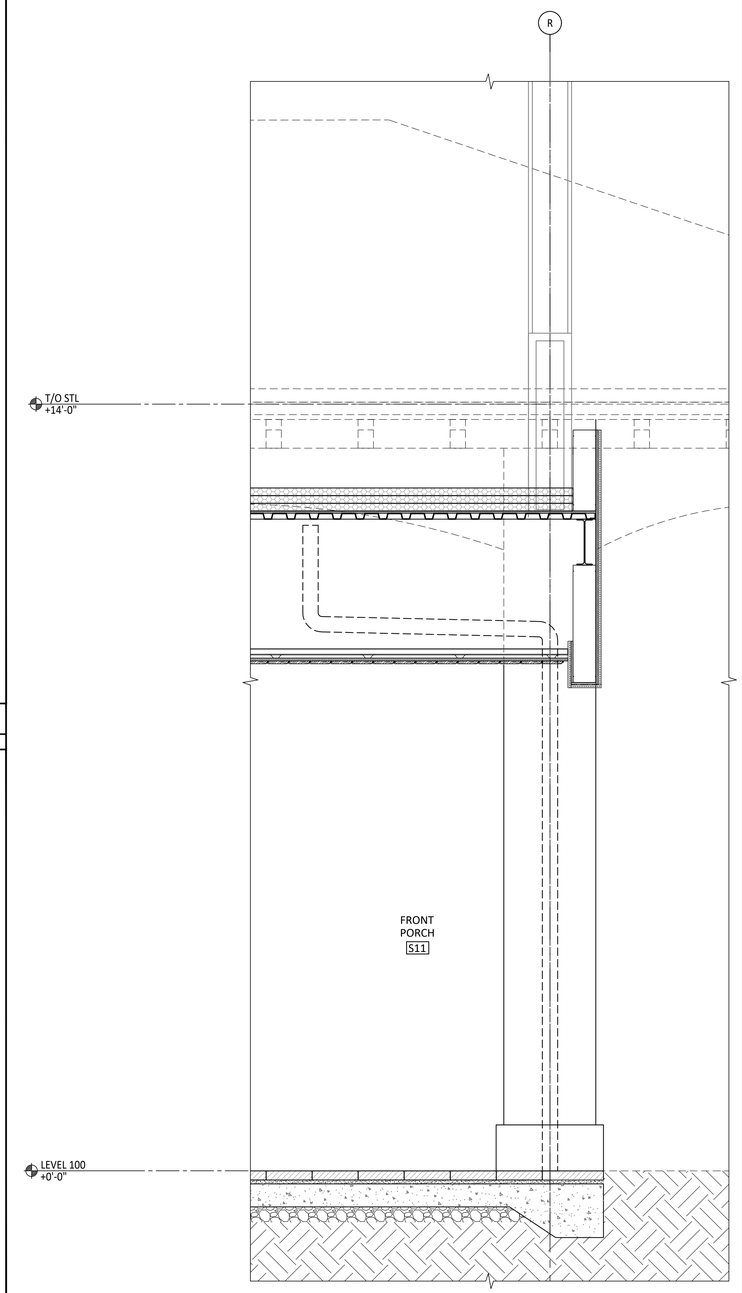

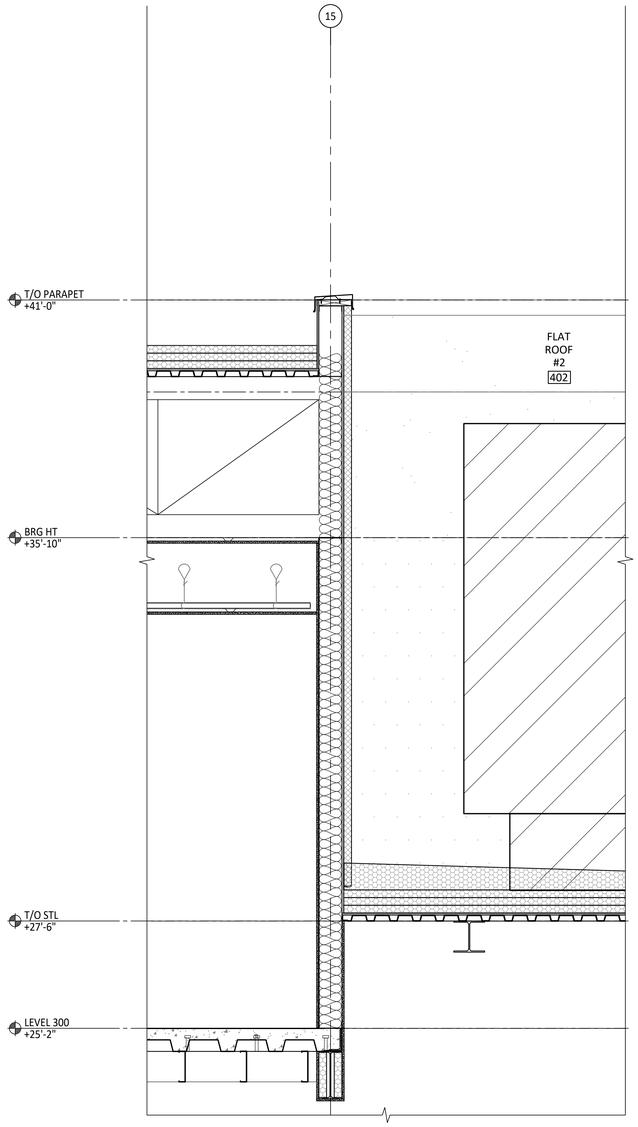

A1 | WALL SECTION @ MECH ROOF WELL / FLAT ROOF #2

A513 | 3/4" = 1'-0"

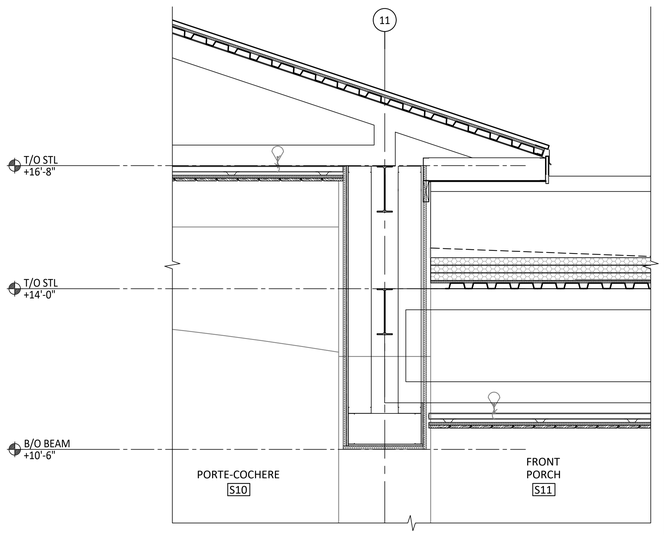

A3 | WALL SECTION @ PORTE-COCHERE / FLAT ROOF

A513 | 3/4" = 1'-0"

A5 | WALL SECTION @ PORTE-COCHERE / CONNECTION

A513 | 3/4" = 1'-0"

KUO DIEDRICH CHI

730 PEACHTREE STREET, NE
STUDIO 325
ATLANTA, GEORGIA 30308
678.244.6270

www.KDCarchitects.com

ARCHITECT:

ARCH. REG: AR91344

CONSULTANT:

REVISIONS

DATE:	DESCRIPTION:
10/18/24	SCHEMATIC DESIGN
6/5/25	DESIGN DEVELOPMENT
10/23/25	50% CONSTRUCTION DOCS
11/14/25	PERMIT SET

PROJECT:

SERENITY SEASIDE RESORT

BUILDING #1

THE INN

186 SOUTH BAY SHORE DRIVE, EASTPOINT, FL 32328

Serenity Seaside Operations, LLC
174 Watercolor Way, PMB 410
Santa Rosa Beach, Florida 32459

JOB NUMBER: 23019.1

DATE: --/--/----

TITLE: WALL SECTIONS

SHEET: A513

K:\Projects\23\23019\DWGs\Serenity_Bldg-1_Inn\Sheets\23019.1-A513.dwg Plotted: Nov 14, 2025 – 2:09pm by ishwor

GENERAL NOTES

A. ALL SECTIONS & DETAILS - REFERENCE GENERAL NOTES ON SHEET A501
B. METAL ROOF DETAILS, SHEET A361
C. FLAT ROOF DETAILS, SHEET A371
D. FIBER CEMENT DETAILS, SHEET A671
E. EIFS DETAILS, SHEETS A673 & A674
F. STUCCO DETAILS, SHEETS A681 & A682
G. SITE DETAILS, SHEETS A691 & A692
H. INTERIOR PARTITION DETAILS, SHEET A851
I. UL PENETRATIONS & ASSEMBLIES, SHEETS A881 - A885
J. ENERGY CODE NOTES, SHEET G103

SHEET NOTES / LEGEND

1. -

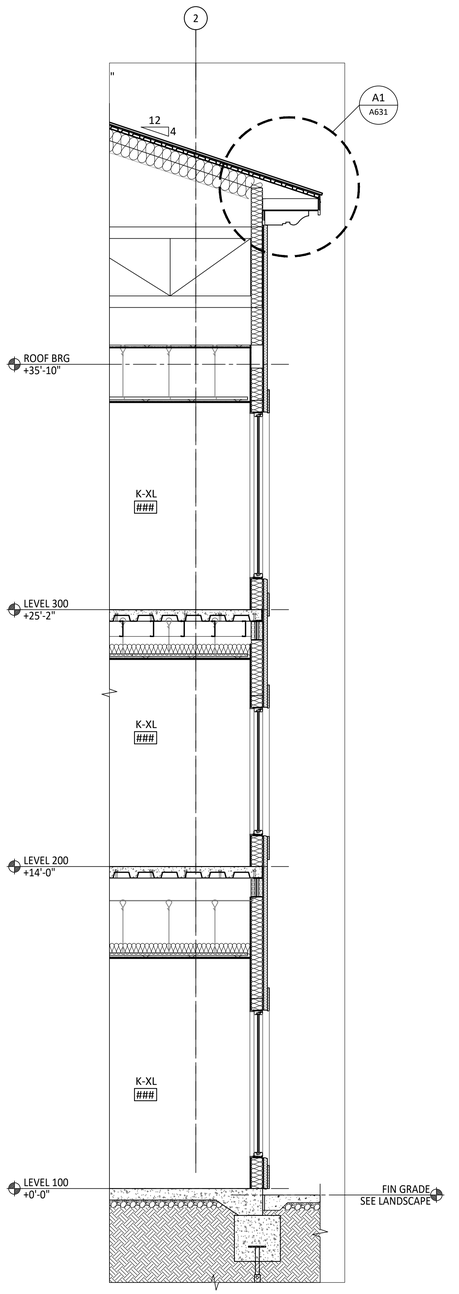

A1 | WALL SECTION "A4" - TOWER "A1"
A601 | 3/8" = 1'-0"

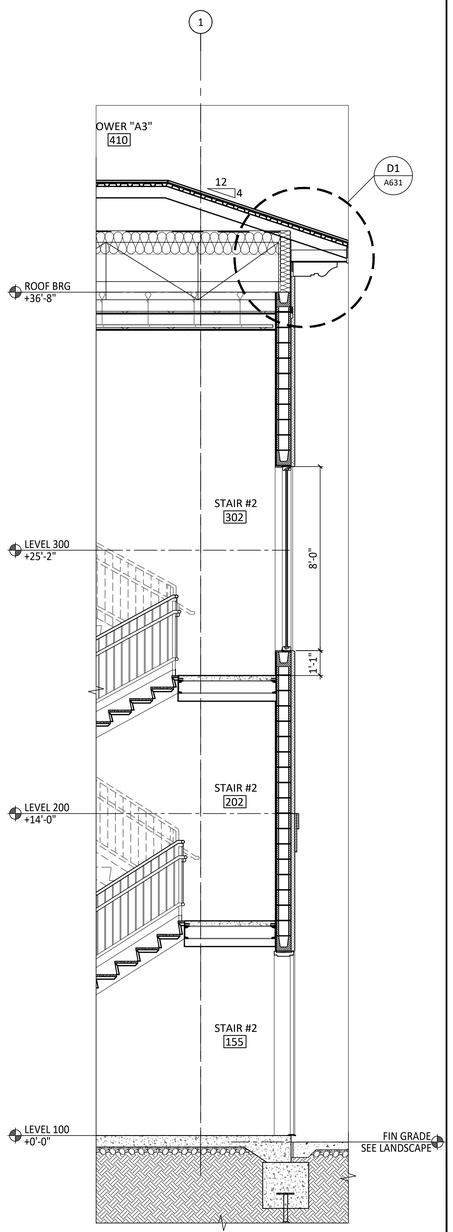

A2 | WALL SECTION "A3" - TOWER
A601 | 3/8" = 1'-0"

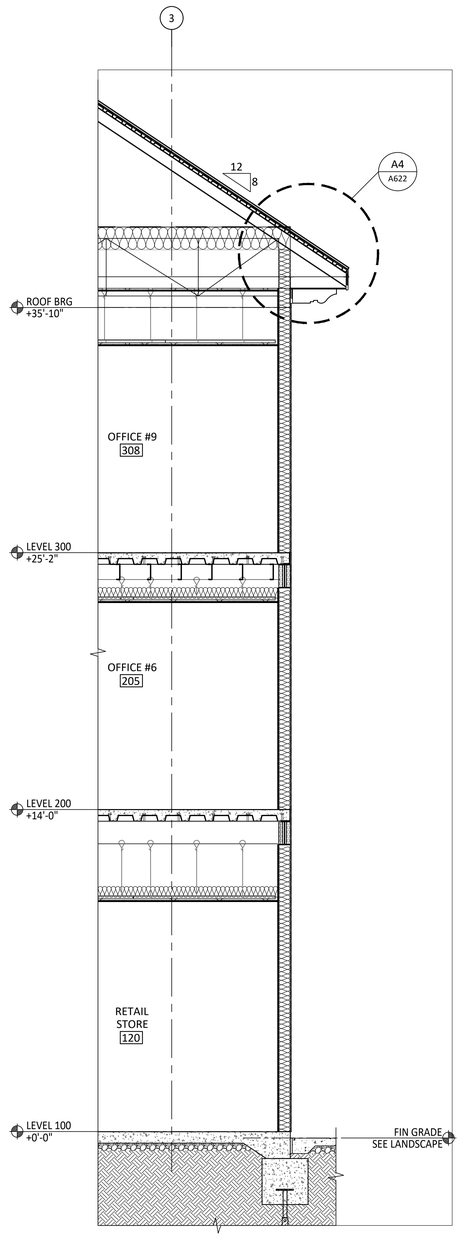

A4 | WALL SECTION "A2"
A601 | 3/8" = 1'-0"

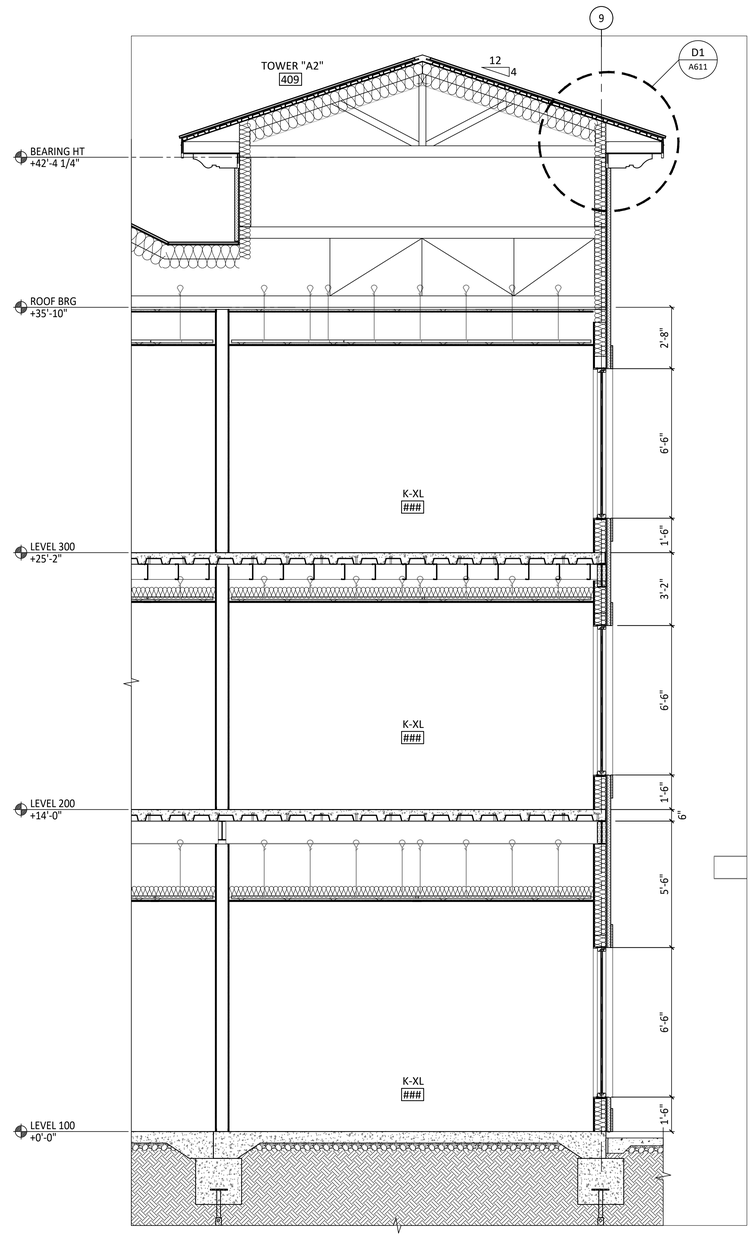

A5 | WALL SECTION "A1" - TOWER "A2"
A601 | 3/8" = 1'-0"

KUO DIEDRICH CHI

730 PEACHTREE STREET, NE
STUDIO 325
ATLANTA, GEORGIA 30308
678.244.6270

www.KDCarchitects.com

ARCHITECT:

ARCH. REG: AR91344

CONSULTANT:

REVISIONS

DATE:	DESCRIPTION:
10/18/24	SCHEMATIC DESIGN
6/5/25	DESIGN DEVELOPMENT
10/23/25	50% CONSTRUCTION DOCS
11/14/25	PERMIT SET

PROJECT:

SERENITY SEASIDE RESORT

BUILDING #1

THE INN

186 SOUTH BAY SHORE DRIVE, EASTPOINT, FL 32328

Serenity Seaside Operations, LLC
174 Watercolor Way, PMB 410
Santa Rosa Beach, Florida 32459

JOB NUMBER: 23019.1

DATE: --/--/----

TITLE:

WALL SECTIONS @ WING "A"

SHEET:

A601

K:\Projects\23\23019\DWGs\Serenity_Bldg-1_Inn\Sheets\23019.1-A601.dwg Plotted: Nov 13, 2025 - 6:21pm by CoteBLawrence

GENERAL NOTES

A. ALL SECTIONS & DETAILS - REFERENCE GENERAL NOTES ON SHEET A501
B. METAL ROOF DETAILS, SHEET A361
C. FLAT ROOF DETAILS, SHEET A371
D. FIBER CEMENT DETAILS, SHEET A671
E. EIFS DETAILS, SHEETS A673 & A674
F. STUCCO DETAILS, SHEETS A681 & A682
G. SITE DETAILS, SHEETS A691 & A692
H. INTERIOR PARTITION DETAILS, SHEET A851
I. UL PENETRATIONS & ASSEMBLIES, SHEETS A881 - A885
J. ENERGY CODE NOTES, SHEET G103

SHEET NOTES / LEGEND

1. -

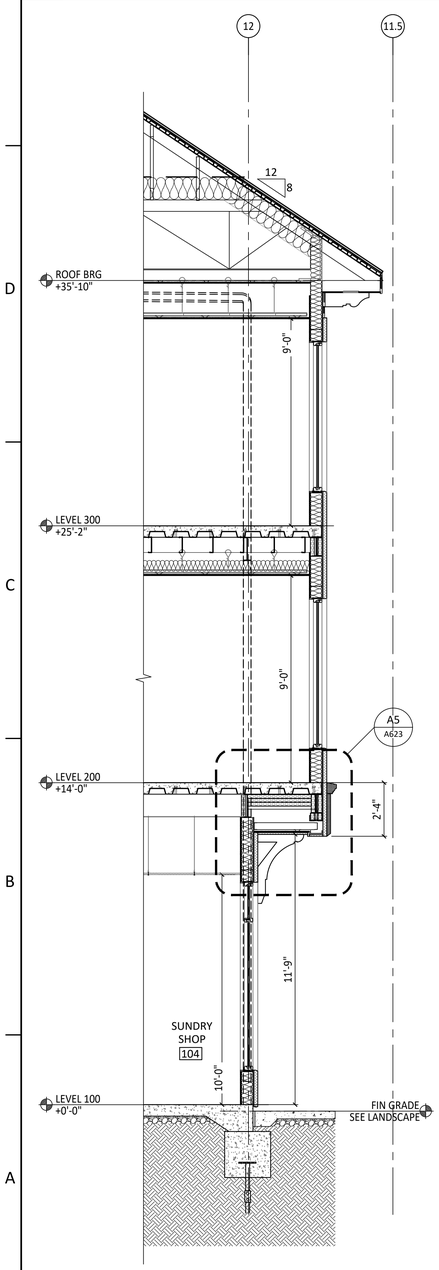

A1 WALL SECTION "B4" - TOWER "B1"
A602 3/8" = 1'-0"

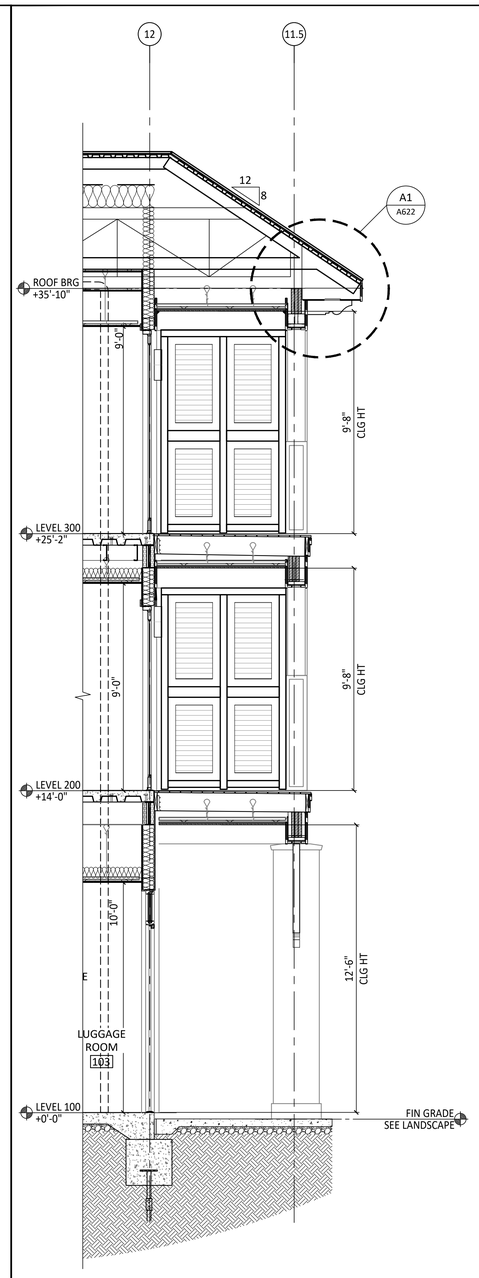

A2 WALL SECT "B3" - BALCONY
A602 3/8" = 1'-0"

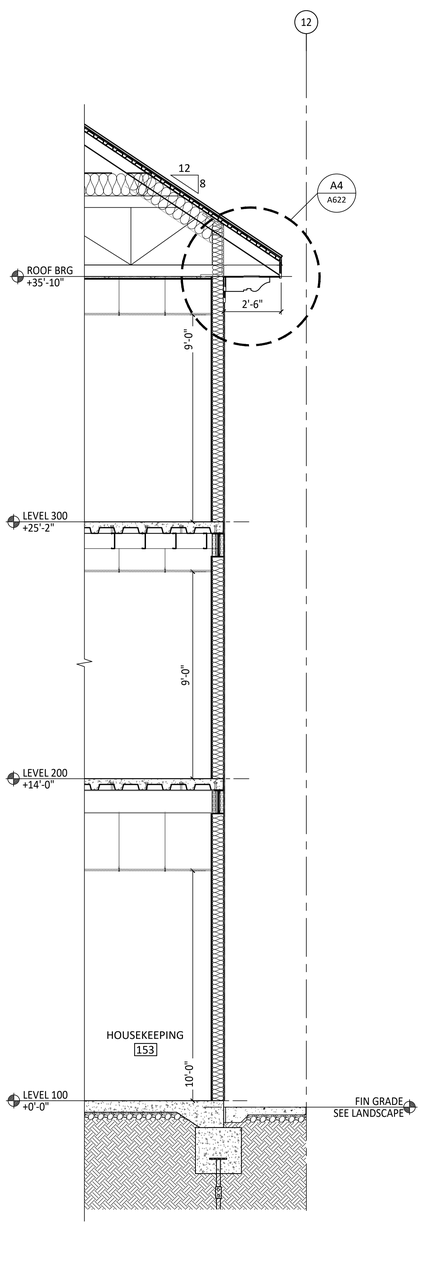

A4 WALL SECT "B2" - NO BALCONY
A602 3/8" = 1'-0"

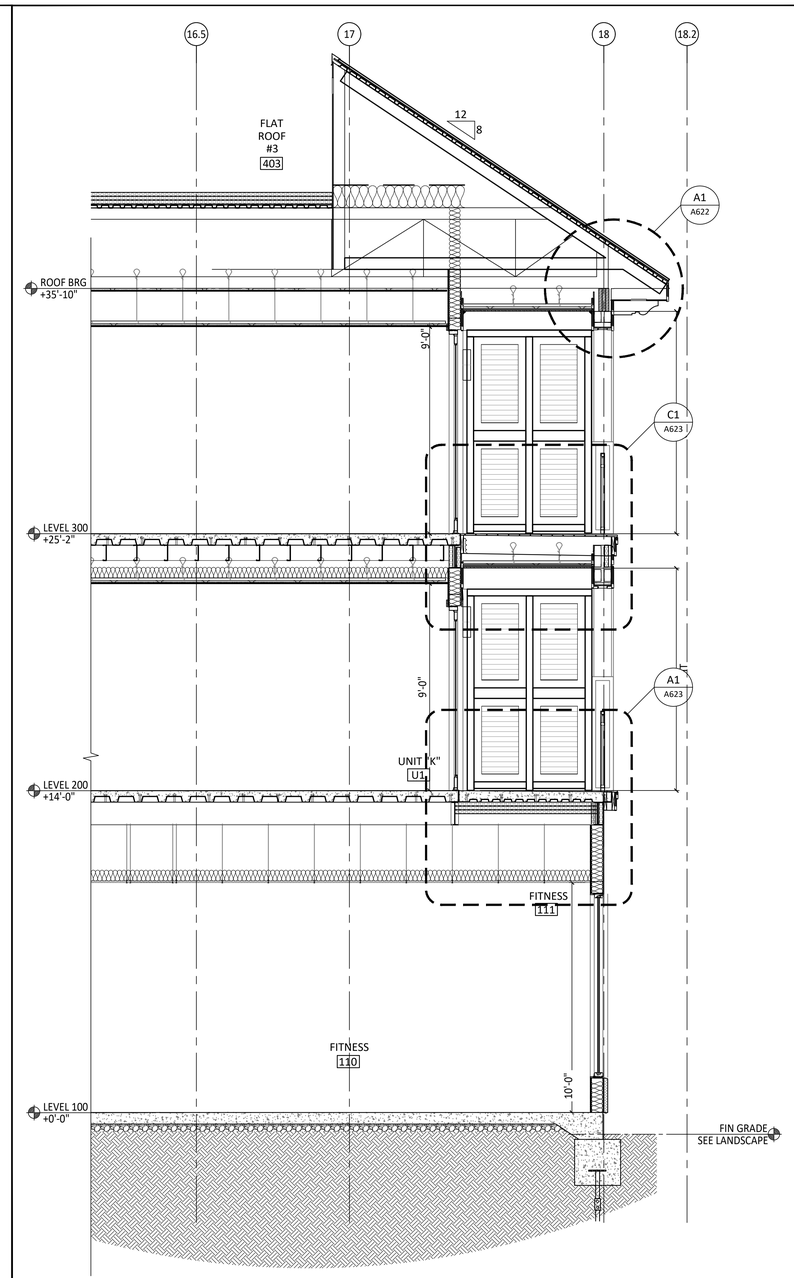

A5 WALL SECTION @ WING "B" - BALCONY
A602 3/8" = 1'-0"

KUO DIEDRICH CHI
730 PEACHTREE STREET, NE
STUDIO 325
ATLANTA, GEORGIA 30308
678.244.6270
www.KDCarchitects.com

ARCHITECT:

ARCH. REG: AR91344

CONSULTANT:

REVISIONS

DATE:	DESCRIPTION:
10/18/24	SCHEMATIC DESIGN
6/5/25	DESIGN DEVELOPMENT
10/23/25	50% CONSTRUCTION DOCS
11/14/25	PERMIT SET

PROJECT:
SERENITY SEASIDE RESORT
BUILDING #1
THE INN
186 SOUTH BAY SHORE DRIVE, EASTPOINT, FL 32328

Serenity Seaside Operations, LLC
174 Watercolor Way, PMB 410
Santa Rosa Beach, Florida 32459

JOB NUMBER: 23019.1
DATE: --/--/----
TITLE: WALL SECTIONS @ WING "B"
SHEET: A602

K:\Projects\23\23019\DWGs\Serenity_Bldg-1_Inn\Sheets\23019.1-A602.dwg Plotted: Nov 14, 2025 - 1:56pm by ColebLawrence

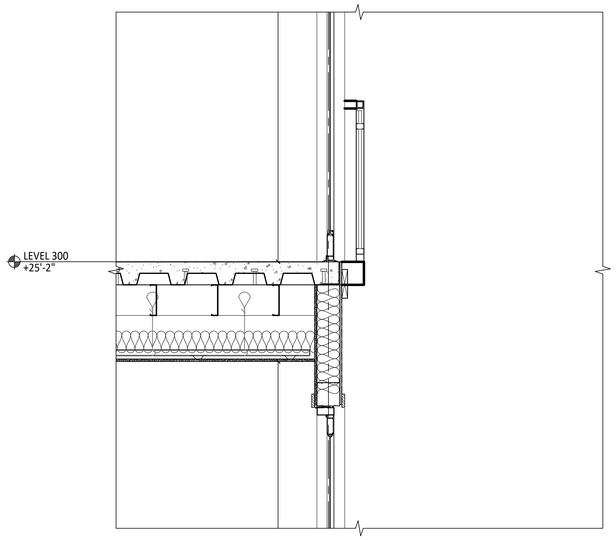

E1 SECTION @ JULIET BALCONY

A603 | 3/4" = 1'-0"

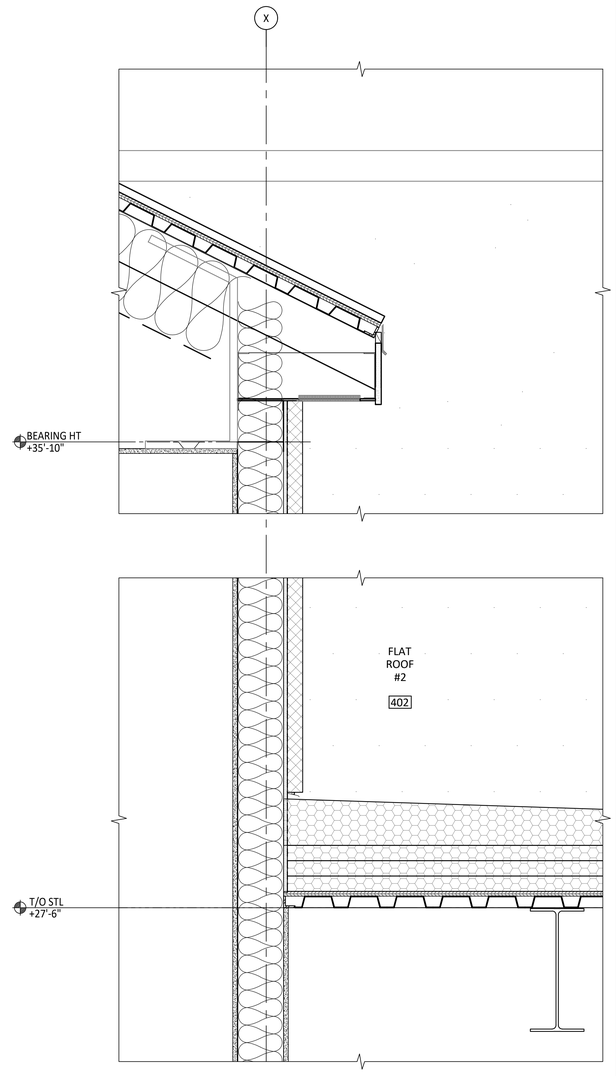

A1 SECTION @ ROOF WELL/FLAT ROOF #2

A603 | 1 1/2" = 1'-0"

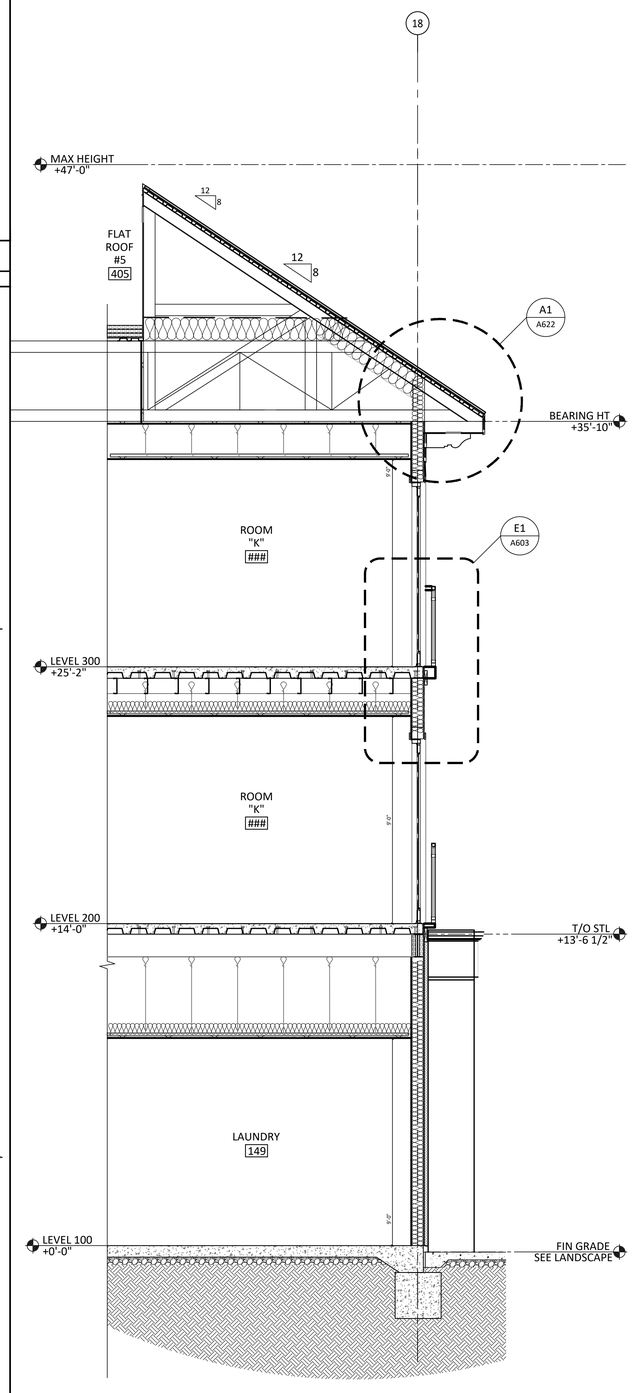

A3 WALL SECTION "C2" @ JULIET BALCONIES

A603 | 3/8" = 1'-0"

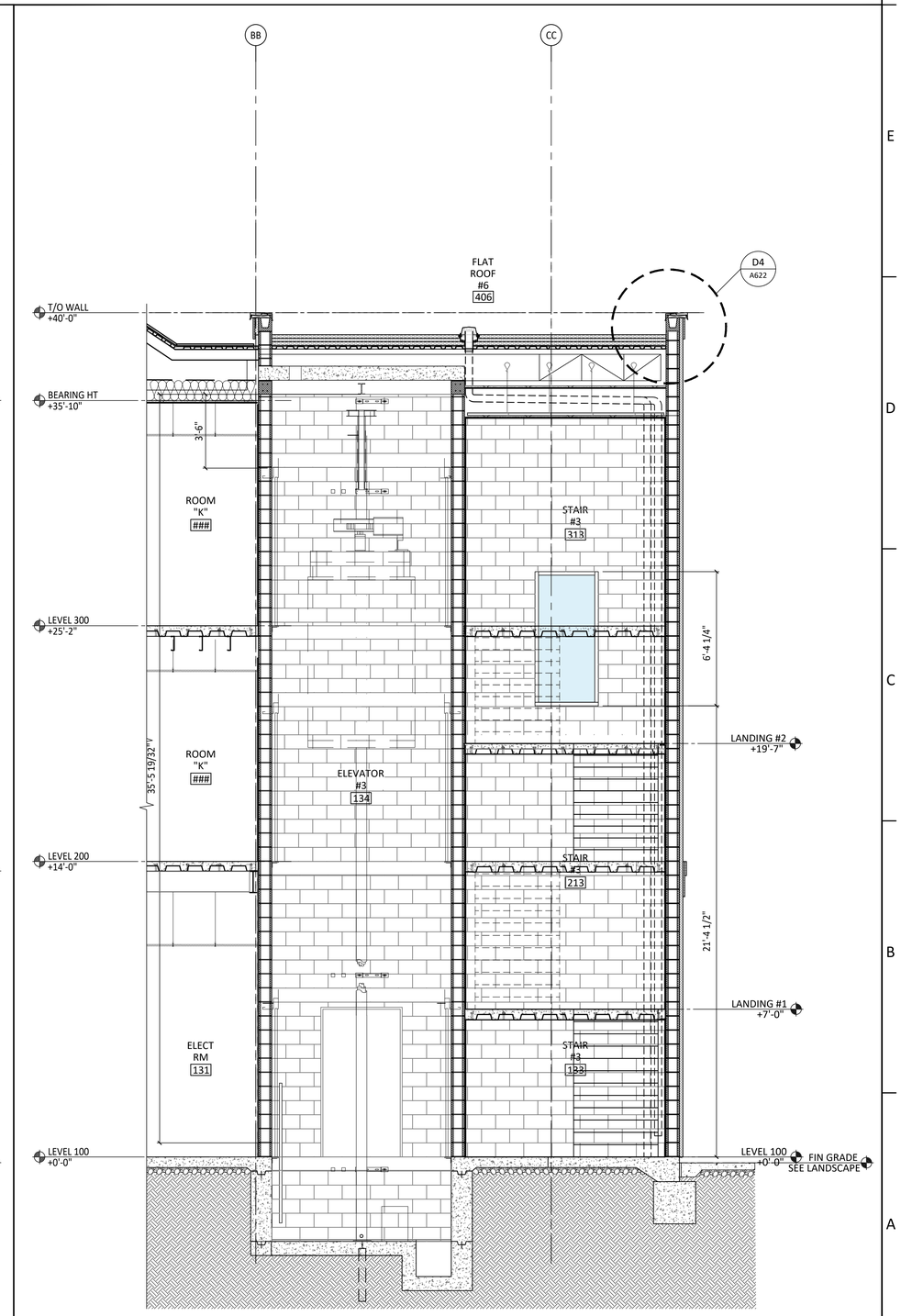

A5 WALL SECTION - TOWER "C1" & ELEVATOR #3

A603 | 3/8" = 1'-0"

GENERAL NOTES

- A. ALL SECTIONS & DETAILS - REFERENCE GENERAL NOTES ON SHEET A501
- B. METAL ROOF DETAILS, SHEET A361
- C. FLAT ROOF DETAILS, SHEET A371
- D. FIBER CEMENT DETAILS, SHEET A671
- E. EIFS DETAILS, SHEETS A673 & A674
- F. STUCCO DETAILS, SHEETS A681 & A682
- G. SITE DETAILS, SHEETS A691 & A692
- H. INTERIOR PARTITION DETAILS, SHEET A851
- I. UL PENETRATIONS & ASSEMBLIES, SHEETS A881 - A885
- J. ENERGY CODE NOTES, SHEET G103

SHEET NOTES / LEGEND

1. -

KUO DIEDRICH CHI

730 PEACHTREE STREET, NE
STUDIO 325
ATLANTA, GEORGIA 30308
678.244.6270

www.KDCarchitects.com

ARCHITECT:

ARCH. REG: AR91344

CONSULTANT:

REVISIONS

DATE:	DESCRIPTION:
10/18/24	SCHEMATIC DESIGN
6/5/25	DESIGN DEVELOPMENT
10/23/25	50% CONSTRUCTION DOCS
11/14/25	PERMIT SET

PROJECT:

SERENITY SEASIDE RESORT

BUILDING #1

THE INN

186 SOUTH BAY SHORE DRIVE, EASTPOINT, FL 32328

Serenity Seaside Operations, LLC
174 Watercolor Way, PMB 410
Santa Rosa Beach, Florida 32459

JOB NUMBER: 23019.1

DATE: --/--/----

TITLE: WALL SECTIONS @ WING "C"

SHEET: A603

K:\Projects\23\23019\DWGs\Serenity_Bldg-1_Inn\Sheets\23019.1-A603.dwg Plotted: Nov 13, 2025 - 6:21pm by ColebLawrence

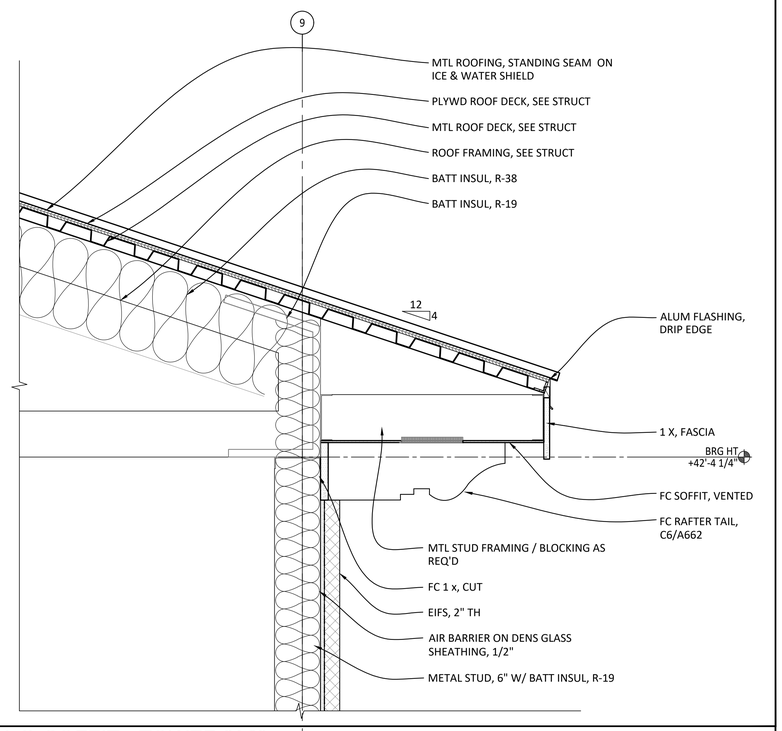

D1 SECTION @ SOFFIT - TOWER "A2"

A611 | 1-1/2" = 1'-0"

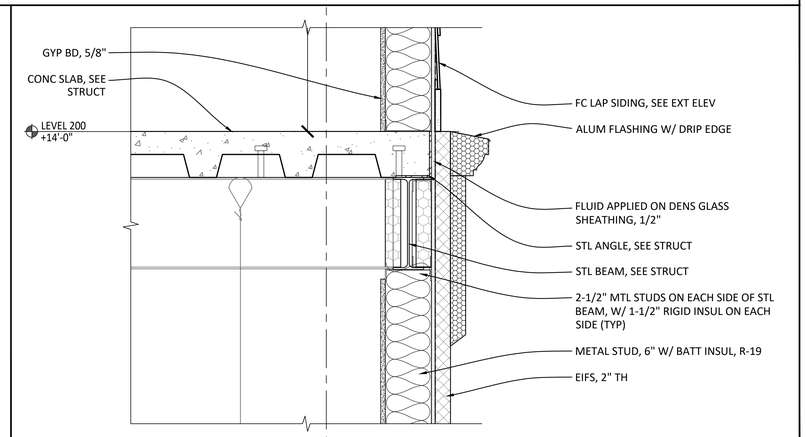

B1 SECTION @ EXT WALL / LEVEL 200

A611 | 1-1/2" = 1'-0"

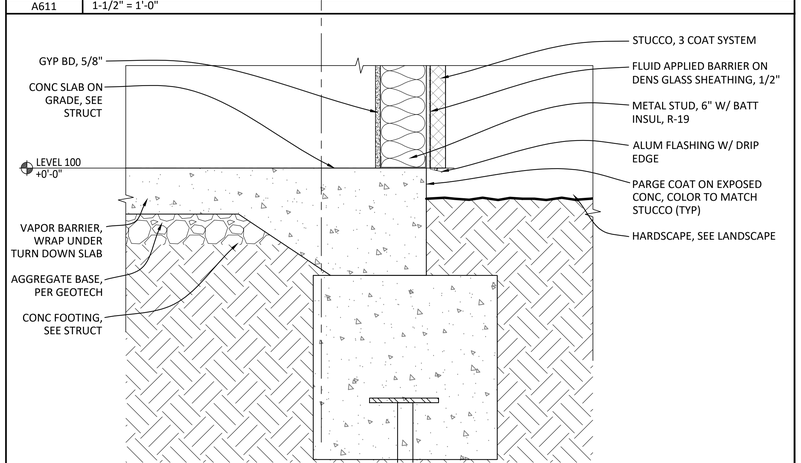

A1 SECTION @ EXT WALL / FIN GRADE

A611 | 1-1/2" = 1'-0"

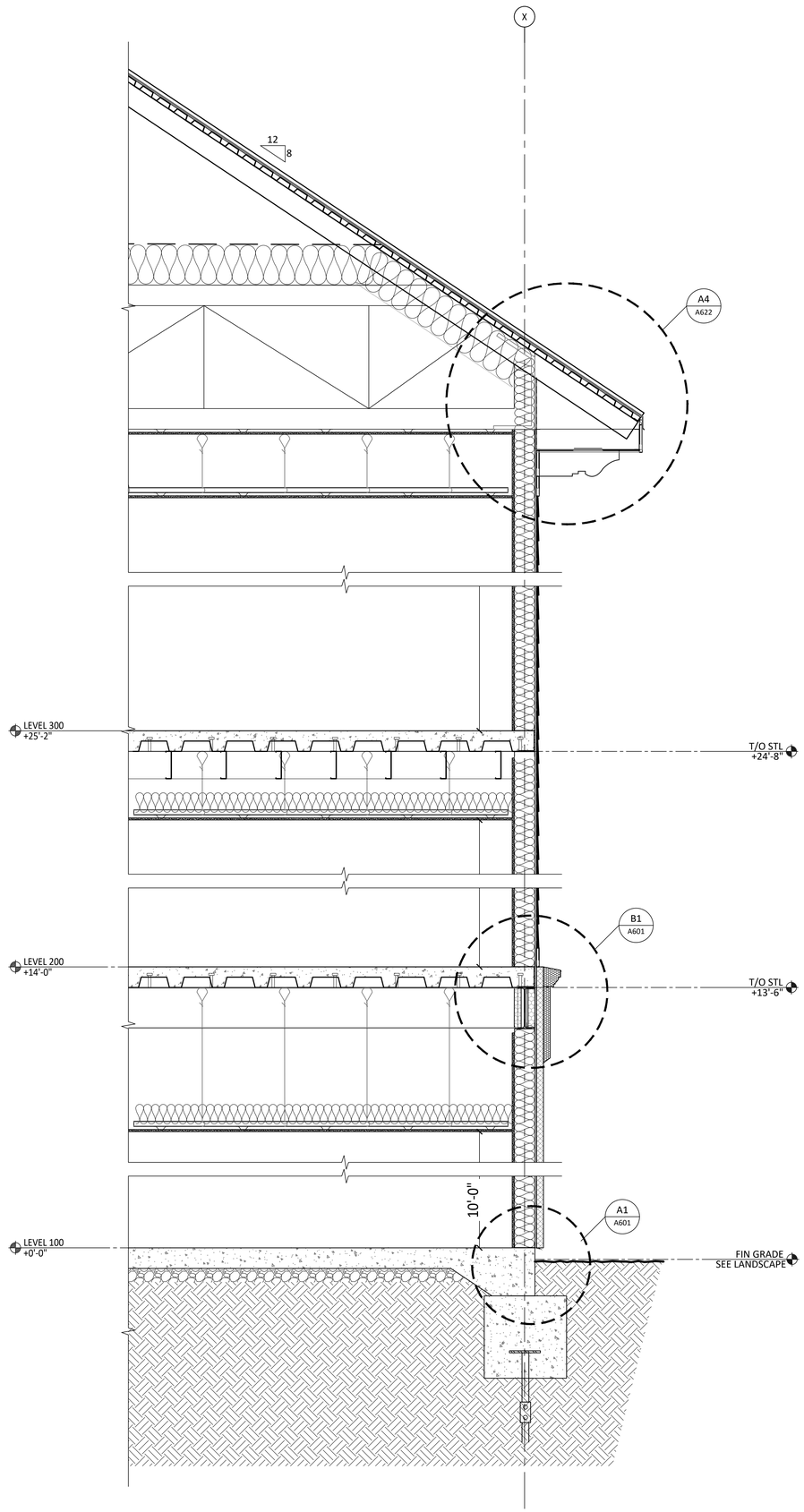

A4 WALL SECTION (TYP)

A611 | 3/4" = 1'-0"

SHEET NOTES / LEGEND

1. -

GENERAL NOTES

A. ALL SECTIONS & DETAILS - REFERENCE GENERAL NOTES ON SHEET A501
B. METAL ROOF DETAILS, SHEET A361
C. FLAT ROOF DETAILS, SHEET A371
D. FIBER CEMENT DETAILS, SHEET A671
E. EIFS DETAILS, SHEETS A673 & A674
F. STUCCO DETAILS, SHEETS A681 & A682
G. SITE DETAILS, SHEETS A691 & A692
H. INTERIOR PARTITION DETAILS, SHEET A851
I. UL PENETRATIONS & ASSEMBLIES, SHEETS A881 - A885
J. ENERGY CODE NOTES, SHEET G103

KUO DIEDRICH CHI
730 PEACHTREE STREET, NE
STUDIO 325
ATLANTA, GEORGIA 30308
678.244.6270
www.KDCarchitects.com

ARCHITECT:

ARCH. REG: AR91344

CONSULTANT:

REVISIONS

DATE:	DESCRIPTION:
10/18/24	SCHEMATIC DESIGN
6/5/25	DESIGN DEVELOPMENT
10/23/25	50% CONSTRUCTION DOCS
11/14/25	PERMIT SET

PROJECT:

SERENITY SEASIDE RESORT

BUILDING #1

THE INN

186 SOUTH BAY SHORE DRIVE, EASTPOINT, FL 32328

Serenity Seaside Operations, LLC
174 Watercolor Way, PMB 410
Santa Rosa Beach, Florida 32459

JOB NUMBER: 23019.1

DATE: --/--/----

TITLE: WALL SECTIONS & DETAILS

SHEET: A611

K:\Projects\23\23019\DWGs\Serenity_Bldg-1_Inn\Sheets\23019.1-A611.dwg Plotted: Nov. 14, 2025 - 1:56pm by CalebLawrence

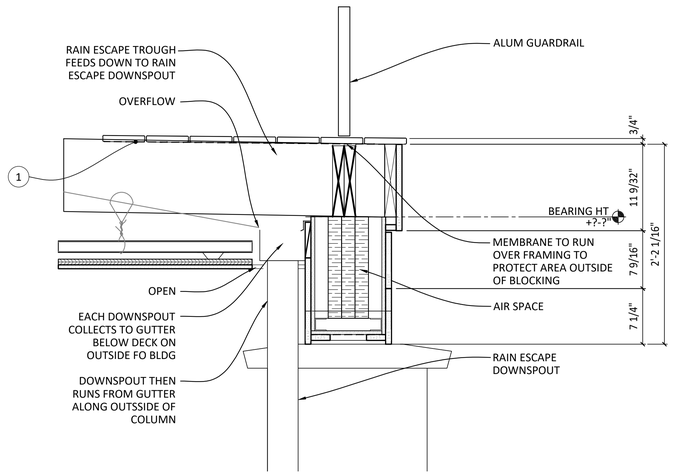

E1	SECT@ TREX RAIN ESCAPE (BELOW TREX BALCONY) - TYP
A612	1-1/2" = 1'-0"

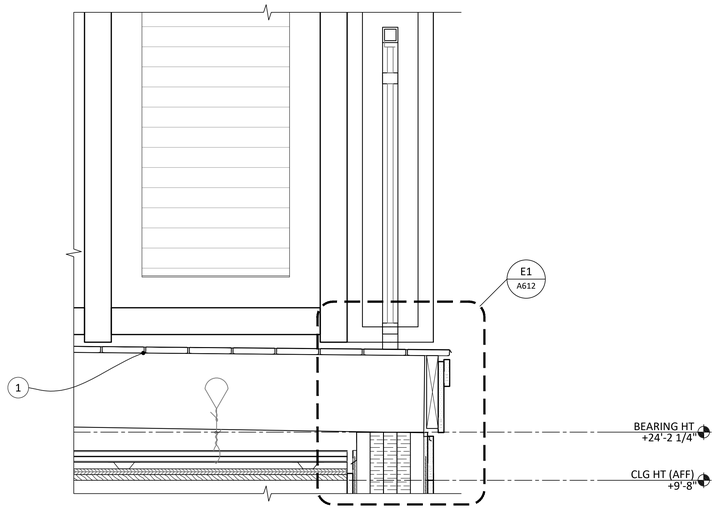

C1	SECTION @ BALCONY / LEVEL 300
A612	1-1/2" = 1'-0"

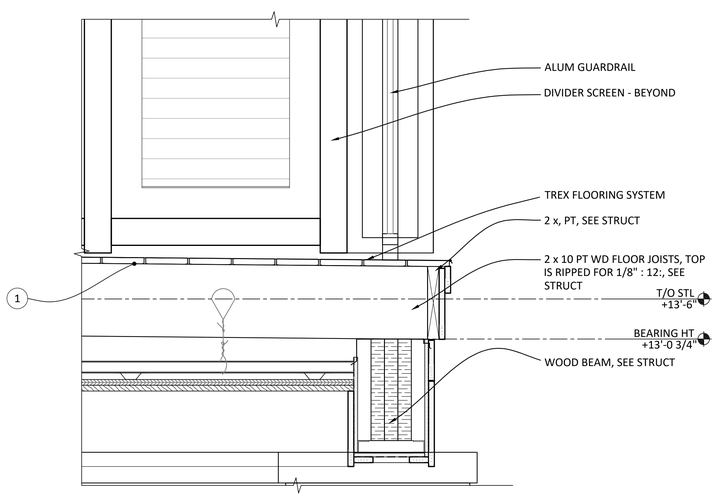

A1	SECTION @ BALCONY / LEVEL 200
A612	1-1/2" = 1'-0"

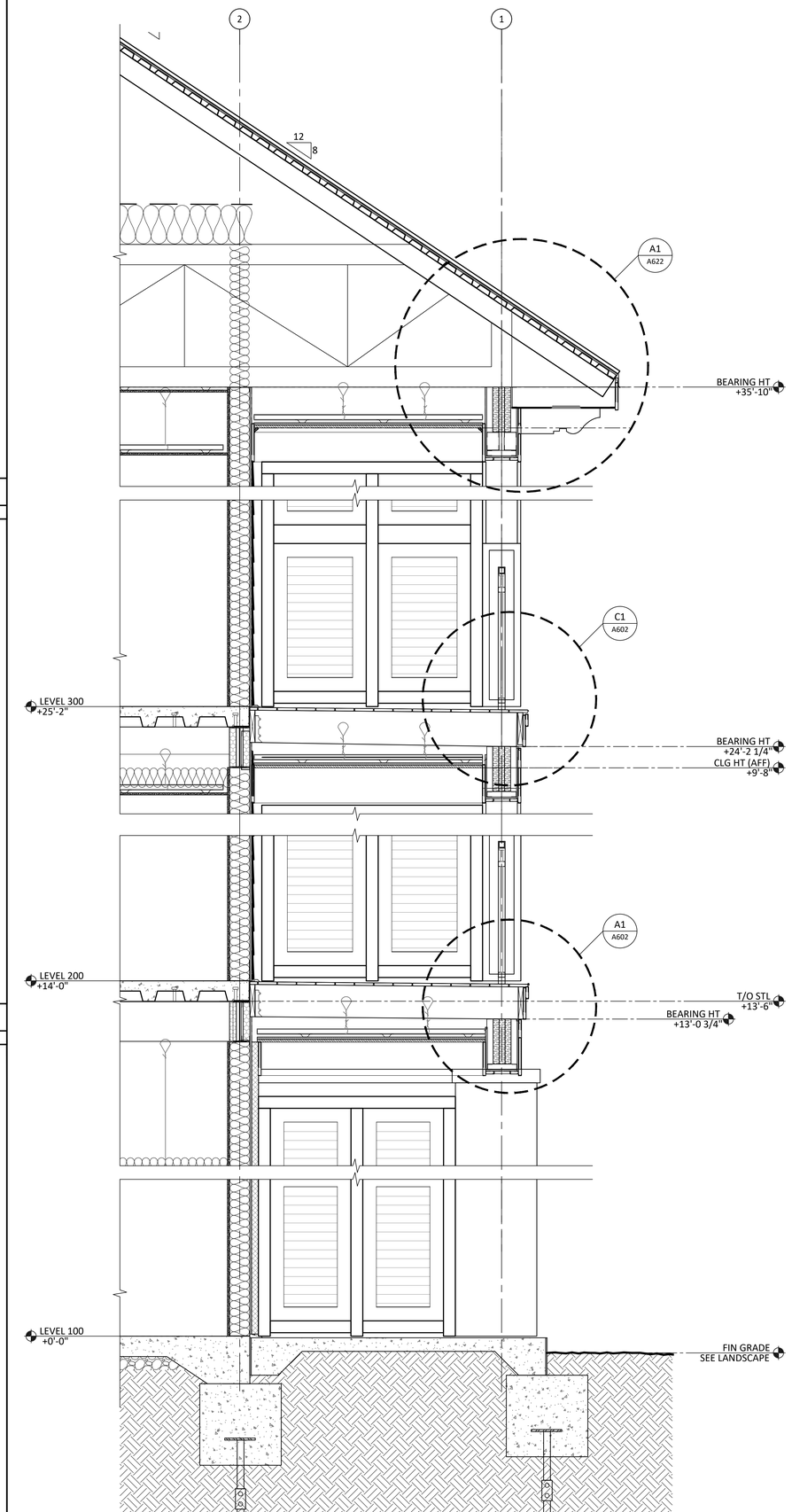

A3	WALL SECTION @ BALCONIES - WING "A"
A612	3/4" = 1'-0"

SHEET NOTES / LEGEND

1. HPDE MEMBRANE WATERPROOFING - TREX RAIN ESACPE SPEC, A6/A612-

GENERAL NOTES

A. ALL SECTIONS & DETAILS - REFERENCE GENERAL NOTES ON SHEET A501

B. UL PENETRATIONS & ASSEMBLIES, SHEETS A881 - A885

C. ENERGY CODE NOTES, SHEET G103

PROVIDE BELOW ALL ELEVATED TREX DECKS

SECTION 07 23 00

HDPE Membrane Waterproofing - TREX® RainEscape® (TRE)

TREX® RainEscape® products are manufactured and sold by IBP, LLC under a Trademark License Agreement with Trex Company, Inc. RainEscape® is a federally registered trademark of IBP, LLC.

The unique TREX® RainEscape® under-deck drainage system keeps rain, spills, and snow melt from dripping through the decking boards above, creating a dry area below.

PART 1 GENERAL

1.1 SECTION INCLUDES

A. Deck Under-Deck Drainage System

1.2 WARRANTY

A. Limited Warranty:

1. Manufacturer warrants that the Deck drainage system ("the System") will be free from defects in material and manufacturing for a period of **twenty years** from the date of purchase the system will not leak when applied according to published directions.
2. Specific terms for warranties can be found at: https://trexrainescape.com/warranty/

PART 2 PRODUCTS

2.1 MANUFACTURES

A. Contract Documents are based on products supplied by; IBP, LLC, 2965 S Tejon St, Englewood, CO 80110

2.2 DECK UNDER-DECK DRAINAGE SYSTEM

A. Thermoplastic Sheet Waterproofing.

1. Products: TREX® RainEscape® as manufactured by IBP, LLC.
   a. 4 Part Deck Drainage System ("the System")
      1) Downspout consisting of Low-Density Polyethylene (LDPE). The Product is form molded:
         (a) Material Thickness (ASTM D 3767): 40 mils (1.016mm) Nominal
         (b) Size: 17.56x13.56x10.51 (WxLxH)
         (c) Color: Black or Brown
      2) Trough consisting of High-Density Polyethylene (HDPE). The product is extruded into shapes and sizes as follows:
         (a) Material Thickness (ASTM D 3767): 20 mils (0.508mm) Nominal
         (b) Material Width: 20 inches (50cm).
         (c) Material Lengths: 12 feet (3.6m) and 16 feet (4.8m)
         (d) Color: Black & Brown
      3) Butyl Caulk
         (a) 10oz Tube
      4) Seam Tape (Single Sided)
         (a) Material Thickness (ASTM D 3767): 20 mils (0.508mm) Nominal
         (b) Material Width: 4 inches (10cm).
         (c) Material Lengths: 50 feet (15.24m)
         (d) Color: Black

   b. Accessories
      1) Fasteners
         (a) Staples
            (1) 18ga 3/8"x3/8" Chisel Point Heavy-Duty or Longer
         (b) Steel Joist Tape (Double Sided)
            (1) Material Thickness (ASTM D 3767): 60 mils (1.524mm) Nominal
            (2) Material Width: 2 inches (10cm).
            (3) Material Lengths: 50 feet (15.24m)
         (c) Decking Fasteners
            (1) Do not use spiked hidden fasteners, or any fastener without a flat base to provide pressure to butyl tape. Contact TRE Specialist at 1-877-348-1385 for recommendations.
      2) Flashing
         (a) 4x4 Post Skirt consisting of Thermo Plastic Urethane (TPU). The product is form molded:
            (1) Material Thickness (ASTM D 3767): 20 mils (0.508mm) Nominal
            (2) Size: 6.5 inches x 6.5 inches x 3.41 inches (WxLxH)
            (3) Brown
      3) Wall Flashing (Self-Adhesive)
         (a) Material: EPDM Foam
         (b) Material Thickness: 1/4-inch (6.35mm) Nominal
         (c) Material Width: 1 inch (25.4mm)
         (d) Material Length: 25 feet (7.62m)
         (e) Material Color: Black

PART 3 EXECUTION

1.1 Installation

A. Install according to TREX® RainEscape® installation guidelines. https://trexrainescape.com/installation/

B. Do not use TREX® RainEscape® material for structural applications

A6	SPEC FOR TREX RAIN ESCAPE
A612	-

KUO DIEDRICH CHI
730 PEACHTREE STREET, NE
STUDIO 325
ATLANTA, GEORGIA 30308
678.244.6270
www.KDCarchitects.com

ARCHITECT:

ARCH. REG: AR91344

CONSULTANT:

REVISIONS

DATE:	DESCRIPTION:
10/18/24	SCHEMATIC DESIGN
6/5/25	DESIGN DEVELOPMENT
10/23/25	50% CONSTRUCTION DOCS
11/14/25	PERMIT SET

PROJECT:

SERENITY SEASIDE RESORT

BUILDING #1

THE INN

186 SOUTH BAY SHORE DRIVE, EASTPOINT, FL 32328

Serenity Seaside Operations, LLC
174 Watercolor Way, PMB 410
Santa Rosa Beach, Florida 32459

JOB NUMBER: 23019.1

DATE: --/--/----

TITLE: WALL SECTIONS & DETAILS

SHEET: A612

K:\Projects\23\23019\DWGs\Serenity_Bldg-1_Inn\Sheets\23019.1-A612.dwg Plotted: Nov 13, 2025 - 6:22pm by ColeLawrence

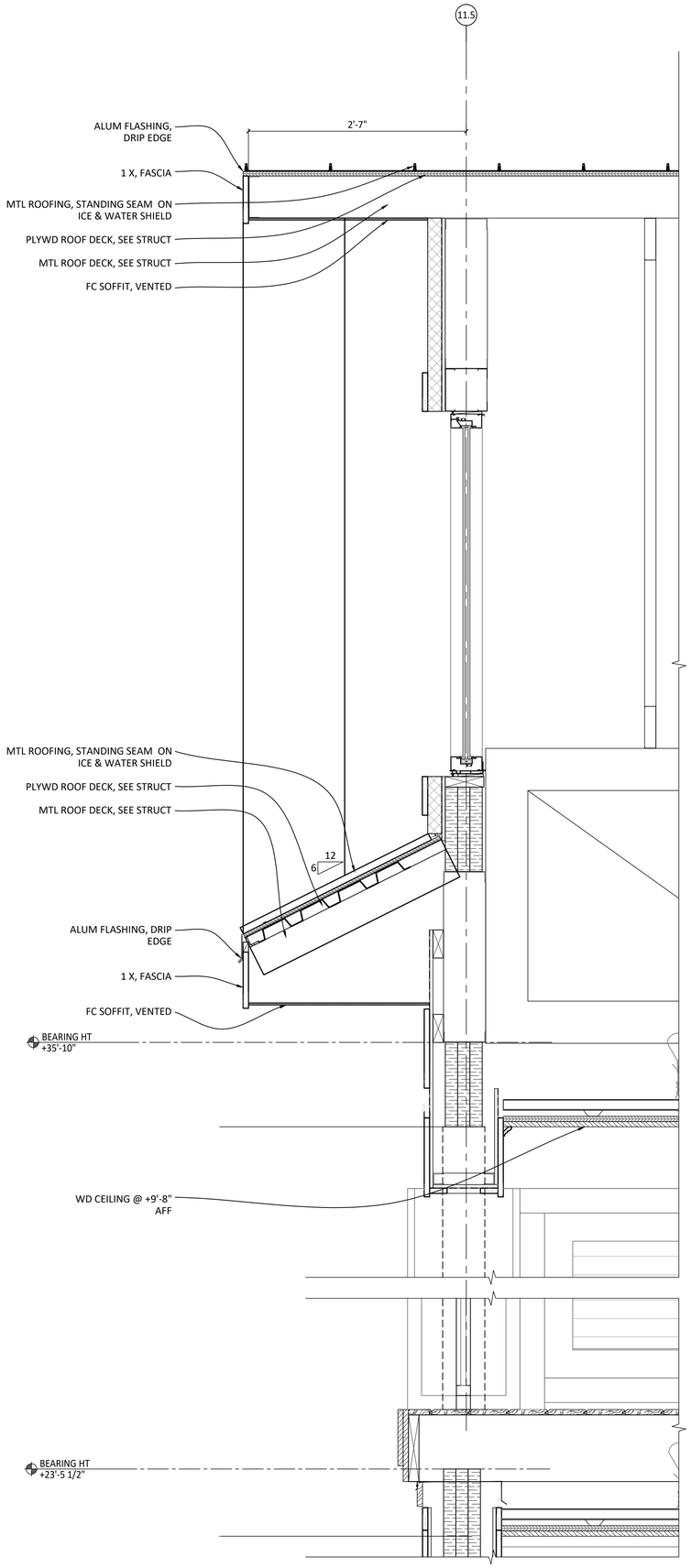

A1 SECTION @ FRONT GABLE / BALCONY - WING "B"

A621 1-1/2" = 1'-0"

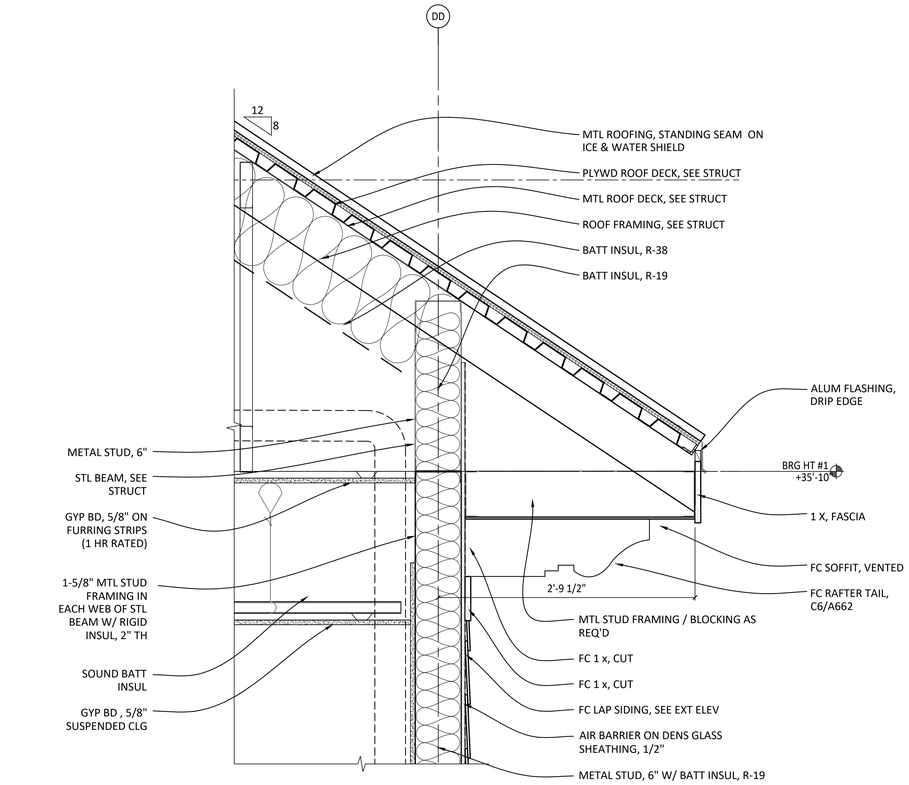

D4 SECTION @ FASCIA - WING "C"

A621 1-1/2" = 1'-0"

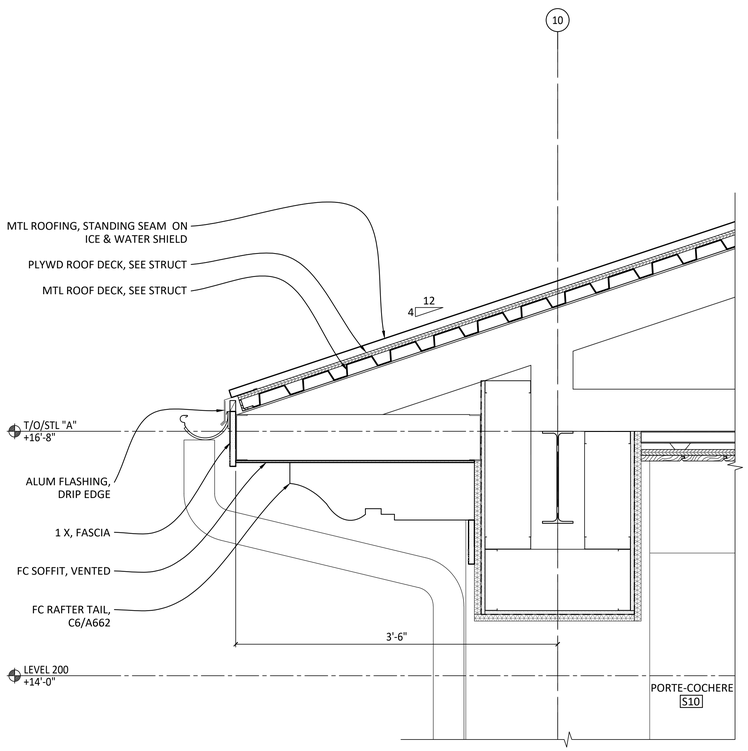

A4 SECTION @ FASCIA PORTE COCHERE - WING "B"

A621 1-1/2" = 1'-0"

SHEET NOTES / LEGEND

1. -

GENERAL NOTES

A. ALL SECTIONS & DETAILS - REFERENCE GENERAL NOTES ON SHEET A501
B. METAL ROOF DETAILS, SHEET A361
C. FLAT ROOF DETAILS, SHEET A371
D. FIBER CEMENT DETAILS, SHEET A671
E. EIFS DETAILS, SHEETS A673 & A674
F. STUCCO DETAILS, SHEETS A681 & A682
G. SITE DETAILS, SHEETS A691 & A692
H. INTERIOR PARTITION DETAILS, SHEET A851
I. UL PENETRATIONS & ASSEMBLIES, SHEETS A881 - A885
J. ENERGY CODE NOTES, SHEET G103

KUO DIEDRICH CHI
730 PEACHTREE STREET, NE
STUDIO 325
ATLANTA, GEORGIA 30308
678.244.6270
www.KDCarchitects.com

ARCHITECT:

ARCH. REG: AR91344

CONSULTANT:

REVISIONS

DATE:	DESCRIPTION:
10/18/24	SCHEMATIC DESIGN
6/5/25	DESIGN DEVELOPMENT
10/23/25	50% CONSTRUCTION DOCS
11/14/25	PERMIT SET

PROJECT:

SERENITY SEASIDE RESORT

BUILDING #1

THE INN

186 SOUTH BAY SHORE DRIVE, EASTPOINT, FL 32328

Serenity Seaside Operations, LLC
174 Watercolor Way, PMB 410
Santa Rosa Beach, Florida 32459

JOB NUMBER: 23019.1

DATE: --/--/----

TITLE: SECTIONS @ FASCIA

SHEET: A621

K:\Projects\23\23019\DWGs\Serenity_Bldg-1_Inn\Sheets\23019.1-A621.dwg Plotted: Nov 13, 2025 - 6:22pm by CoteLawrence

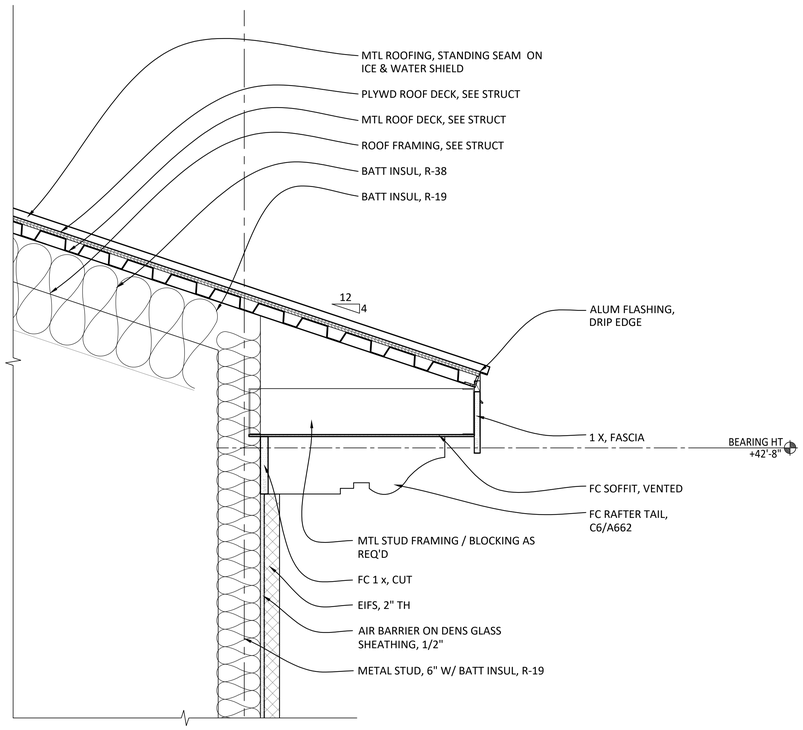

A4	SECTION @ SOFFIT - TOWER "A2"
A622	1-1/2" = 1'-0"

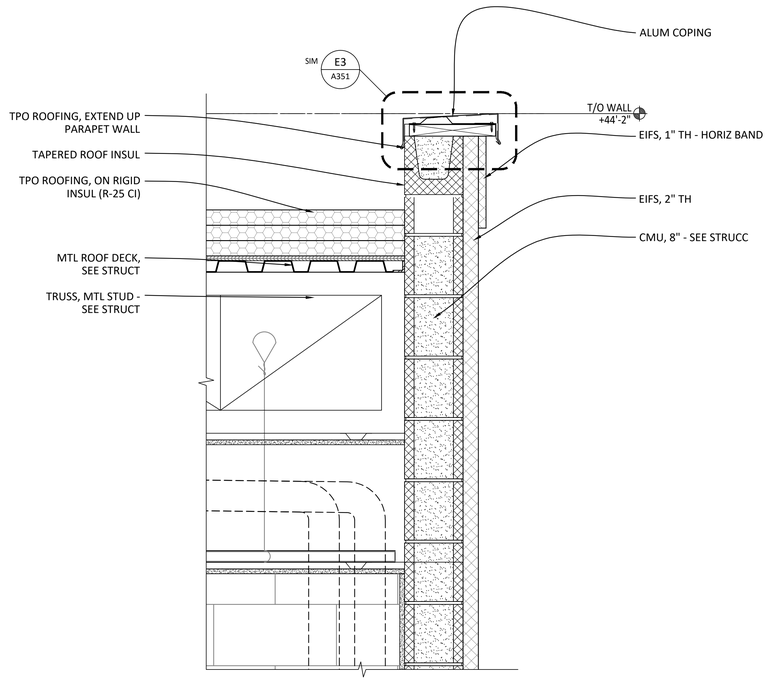

D4	SECTION @ PARAPET - WING "C" PARAPET
A622	1-1/2" = 1'-0"

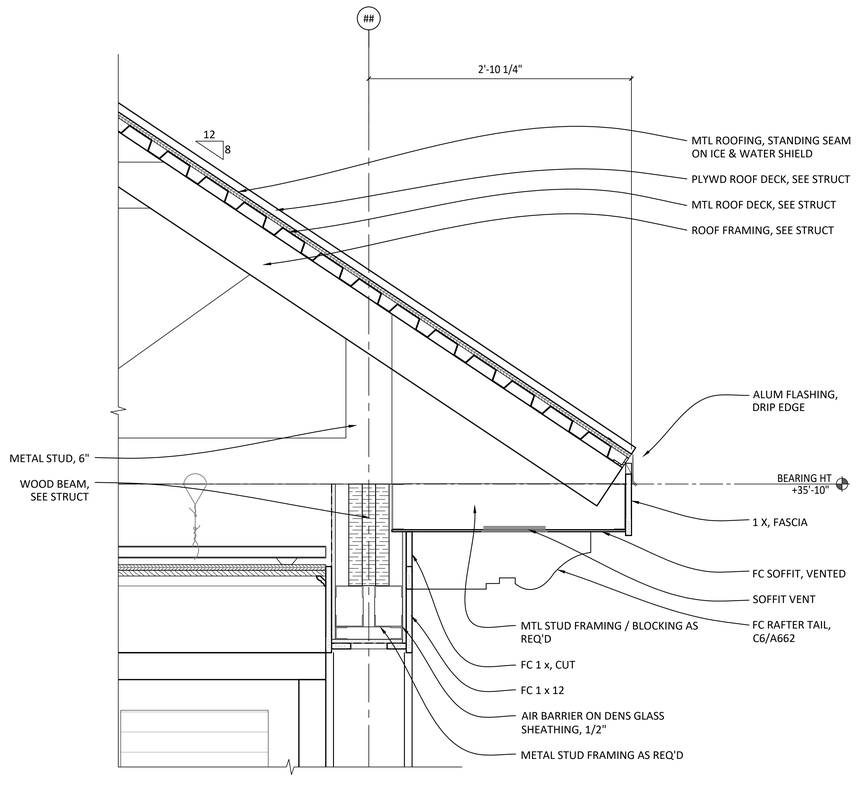

A1	SECTION @ SOFFIT W/ BALCONY
A622	1-1/2" = 1'-0"

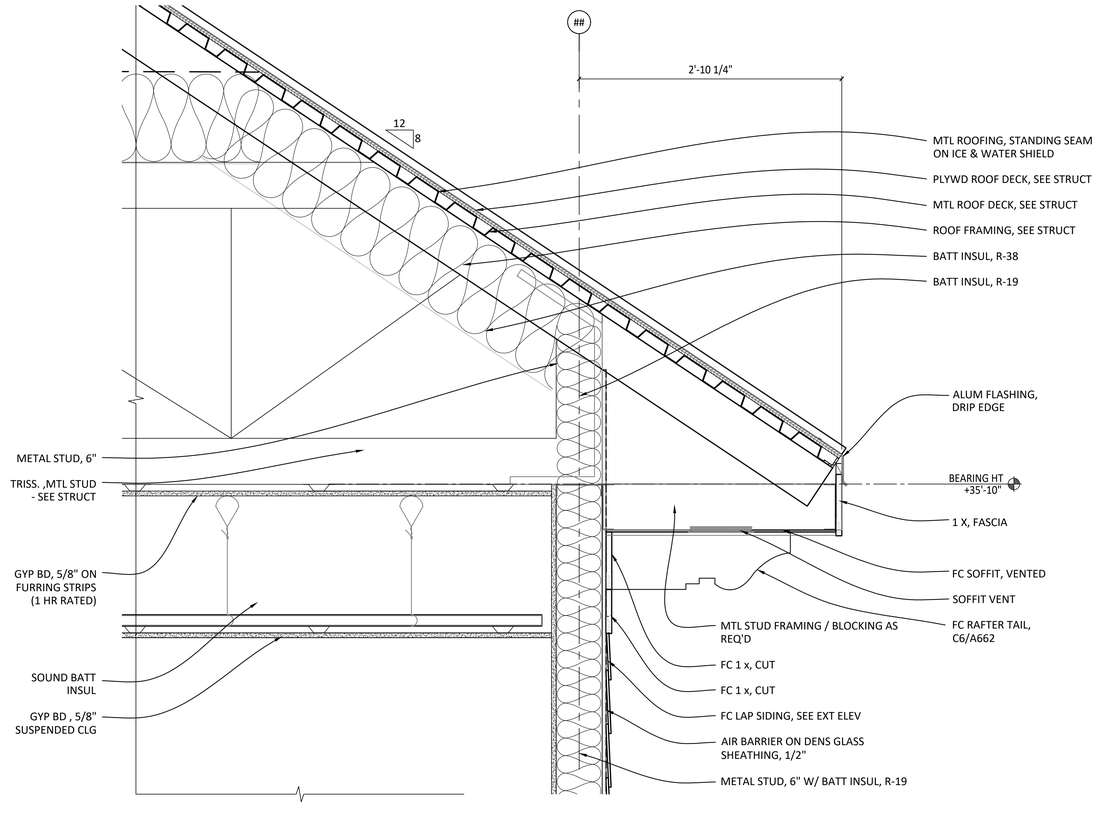

A4	SECTION @ SOFFIT W/ NO BALCONY
A622	1-1/2" = 1'-0"

SHEET NOTES / LEGEND

1. -

GENERAL NOTES

A. ALL SECTIONS & DETAILS - REFERENCE GENERAL NOTES ON SHEET A501
B. METAL ROOF DETAILS, SHEET A361
C. FLAT ROOF DETAILS, SHEET A371
D. FIBER CEMENT DETAILS, SHEET A671
E. EIFS DETAILS, SHEETS A673 & A674
F. STUCCO DETAILS, SHEETS A681 & A682
G. SITE DETAILS, SHEETS A691 & A692
H. INTERIOR PARTITION DETAILS, SHEET A851
I. UL PENETRATIONS & ASSEMBLIES, SHEETS A881 - A885
J. ENERGY CODE NOTES, SHEET G103

KUO DIEDRICH CHI
730 PEACHTREE STREET, NE
STUDIO 325
ATLANTA, GEORGIA 30308
678.244.6270
www.KDCarchitects.com

ARCHITECT:

ARCH. REG: AR91344

CONSULTANT:

REVISIONS

DATE:	DESCRIPTION:
10/18/24	SCHEMATIC DESIGN
6/5/25	DESIGN DEVELOPMENT
10/23/25	50% CONSTRUCTION DOCS
11/14/25	PERMIT SET

PROJECT:

SERENITY SEASIDE RESORT

BUILDING #1

THE INN

186 SOUTH BAY SHORE DRIVE, EASTPOINT, FL 32328

Serenity Seaside Operations, LLC
174 Watercolor Way, PMB 410
Santa Rosa Beach, Florida 32459

JOB NUMBER: 23019.1

DATE: --/--/----

TITLE: SECTIONS @ SOFFITS

SHEET: A622

K:\Projects\23\23019\DWGs\Serenity_Bldg-1_Inn\Sheets\23019.1-A622.dwg Plotted: Nov 13, 2025 - 6:23pm by ColebLawrence

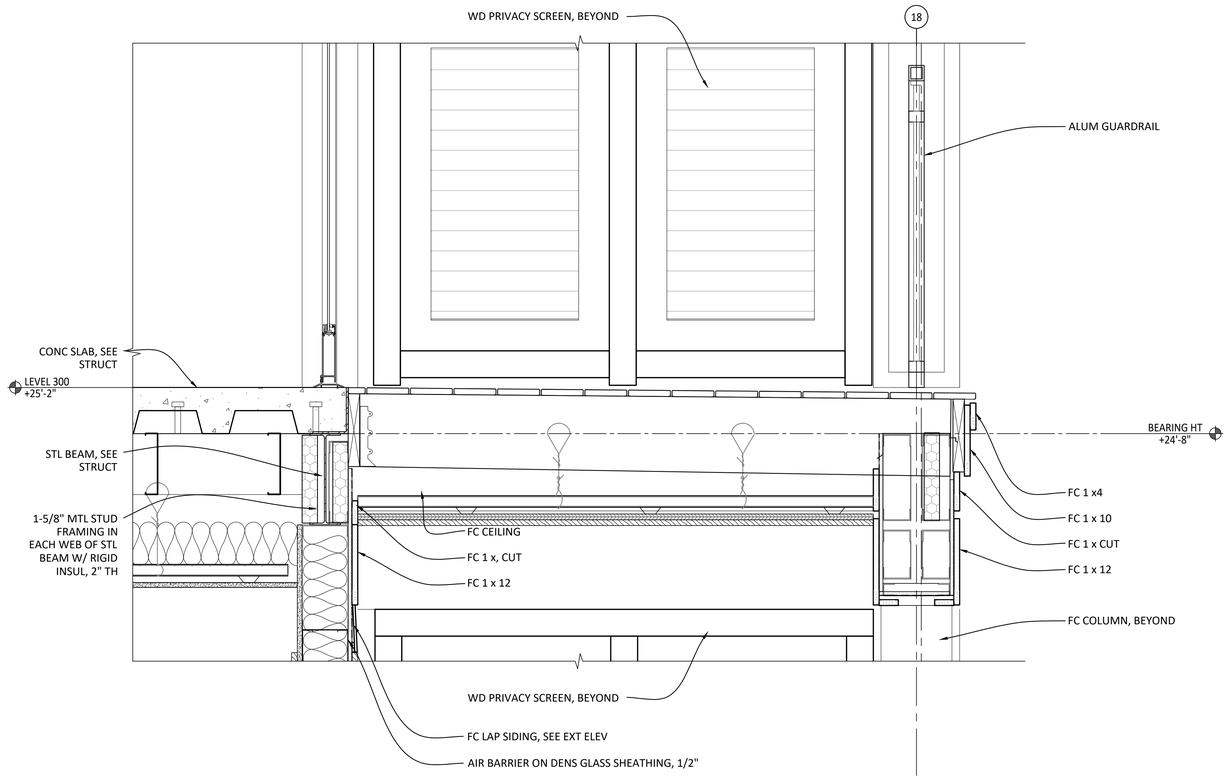

C1 SECTION @ REAR BALCONY - LEVEL 300: WING "B"

A623 1-1/2" = 1'-0"

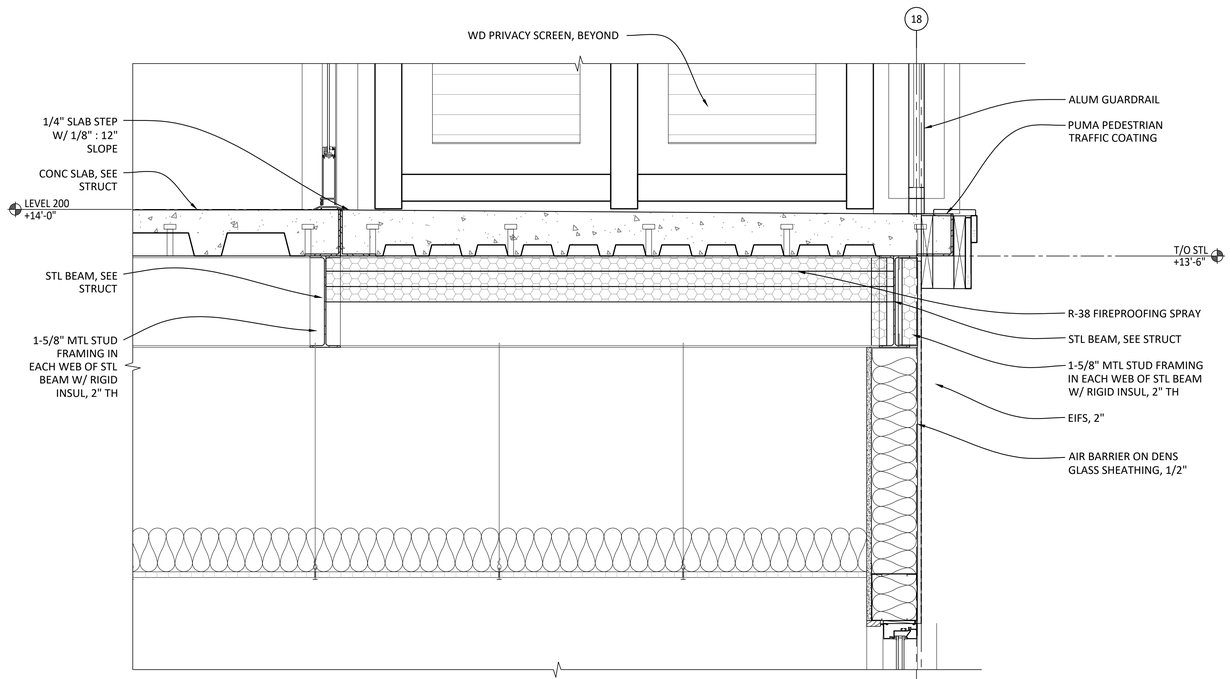

A1 SECTION @ REAR BALCONY - LEVEL 200: WING "A"

A623 1-1/2" = 1'-0"

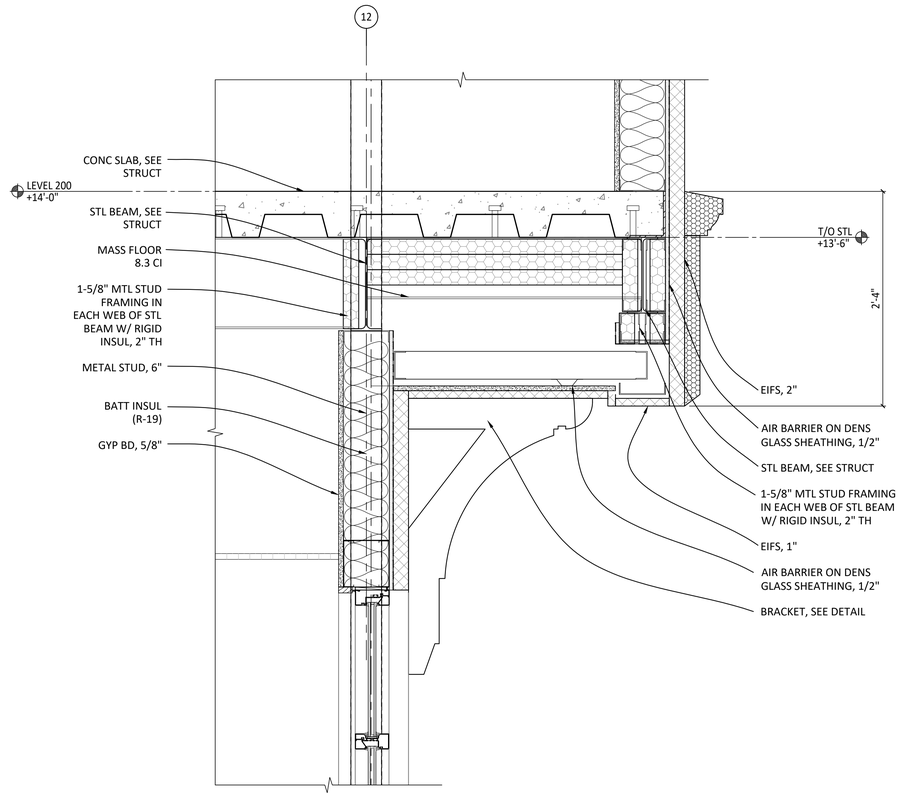

A5 SECTION @ "FRONT" OVERHANG @ LEVEL 200

A623 1-1/2" = 1'-0"

SHEET NOTES / LEGEND

1. -

GENERAL NOTES

A. ALL SECTIONS & DETAILS - REFERENCE GENERAL NOTES ON SHEET A501
B. METAL ROOF DETAILS, SHEET A361
C. FLAT ROOF DETAILS, SHEET A371
D. FIBER CEMENT DETAILS, SHEET A671
E. EIFS DETAILS, SHEETS A673 & A674
F. STUCCO DETAILS, SHEETS A681 & A682
G. SITE DETAILS, SHEETS A691 & A692
H. INTERIOR PARTITION DETAILS, SHEET A851
I. UL PENETRATIONS & ASSEMBLIES, SHEETS A881 - A885
J. ENERGY CODE NOTES, SHEET G103

KUO DIEDRICH CHI
730 PEACHTREE STREET, NE
STUDIO 325
ATLANTA, GEORGIA 30308
678.244.6270
www.KDCarchitects.com

ARCHITECT:

ARCH. REG: AR91344

CONSULTANT:

REVISIONS

DATE:	DESCRIPTION:
10/18/24	SCHEMATIC DESIGN
6/5/25	DESIGN DEVELOPMENT
10/23/25	50% CONSTRUCTION DOCS
11/14/25	PERMIT SET

PROJECT:

SERENITY SEASIDE RESORT

BUILDING #1

THE INN

186 SOUTH BAY SHORE DRIVE, EASTPOINT, FL 32328

Serenity Seaside Operations, LLC
174 Watercolor Way, PMB 410
Santa Rosa Beach, Florida 32459

JOB NUMBER: 23019.1

DATE: --/--/----

TITLE: SECTIONS & DETAILS

SHEET: A623

K:\Projects\23\23019\DWGs\Serenity_Bldg-1_inn\Sheets\23019.1-A623.dwg Plotted: Nov 14, 2025 - 1:57pm by ColebLawrence

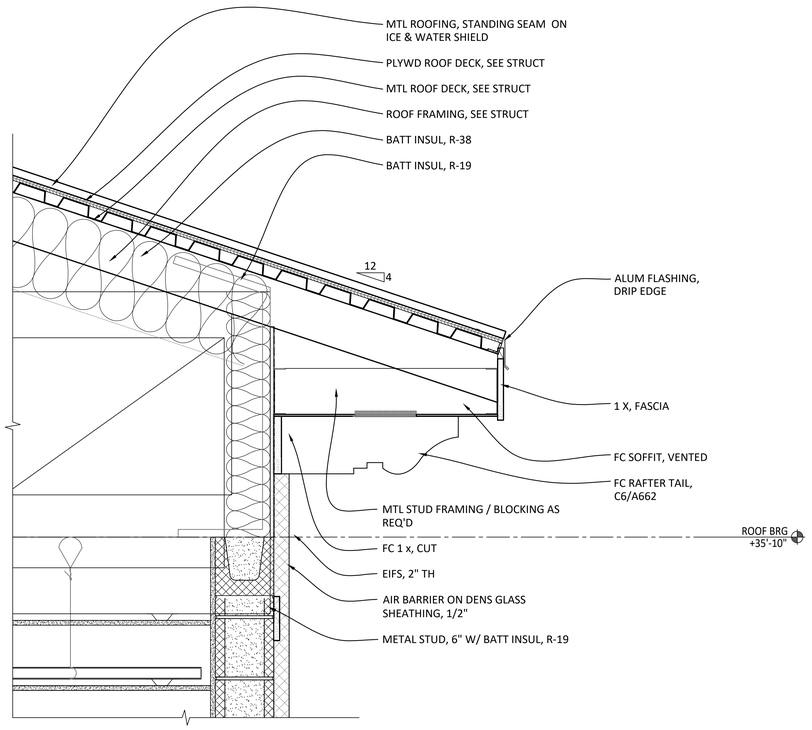

D1 SECTION @ SOFFIT: STAIR TOWER "A3"
A631 1-1/2" = 1'-0"

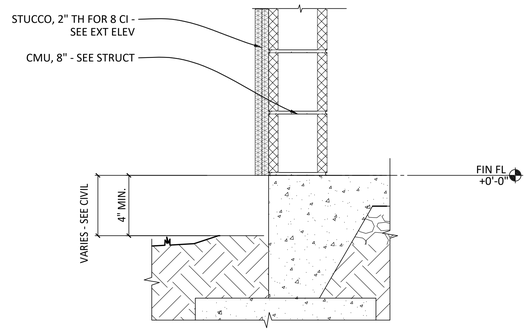

E4 SECTION @ STUCCO ON CMU / FIN GRADE
A631 1-1/2" = 1'-0"

GENERAL NOTES

- A. ALL SECTIONS & DETAILS - REFERENCE GENERAL NOTES ON SHEET A501
- B. METAL ROOF DETAILS, SHEET A361
- C. FLAT ROOF DETAILS, SHEET A371
- D. FIBER CEMENT DETAILS, SHEET A671
- E. EIFS DETAILS, SHEETS A673 & A674
- F. STUCCO DETAILS, SHEETS A681 & A682
- G. SITE DETAILS, SHEETS A691 & A692
- H. INTERIOR PARTITION DETAILS, SHEET A851
- I. UL PENETRATIONS & ASSEMBLIES, SHEETS A881 - A885
- J. ENERGY CODE NOTES, SHEET G103

SHEET NOTES / LEGEND

1. -

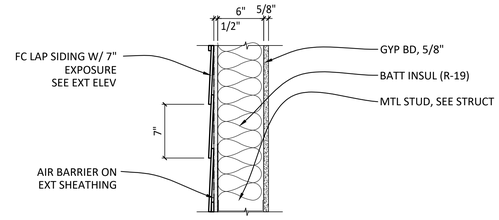

D4 SECTION @ SIDING
A631 1-1/2" = 1'-0"

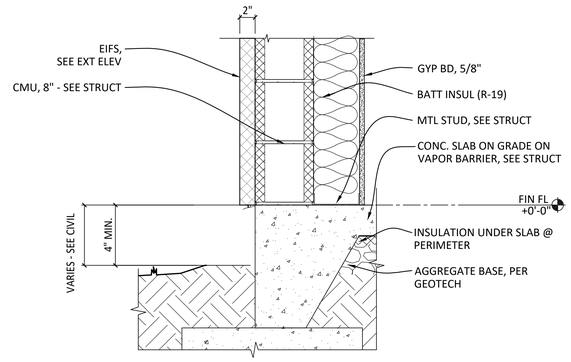

D6 SECTION @ EIFS ON CMU / FIN GRADE
A631 1-1/2" = 1'-0"

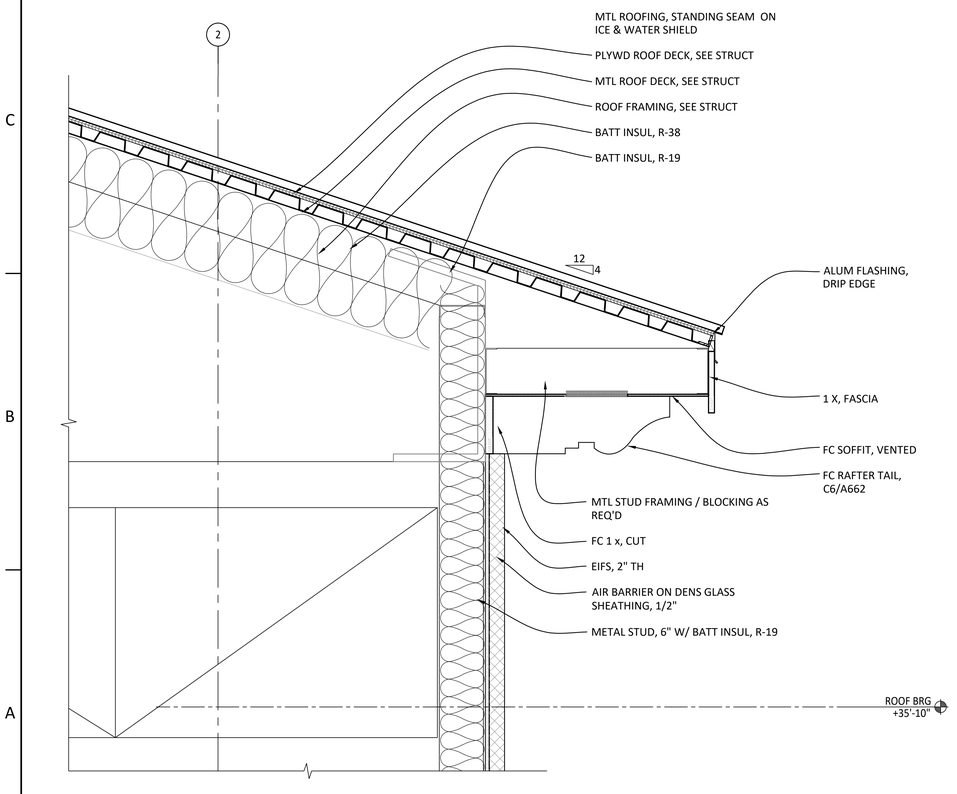

A1 SECTION @ SOFFIT: TOWER "A1"
A631 1-1/2" = 1'-0"

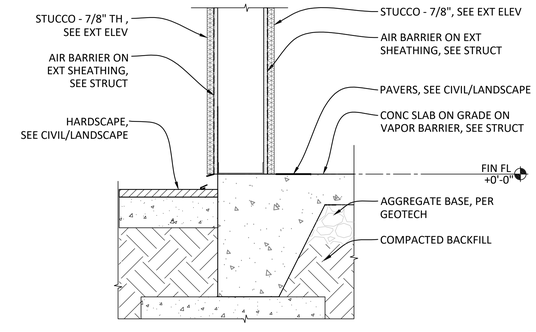

B4 SECTION @ STUCCO / HARDSCAPE
A631 1-1/2" = 1'-0"

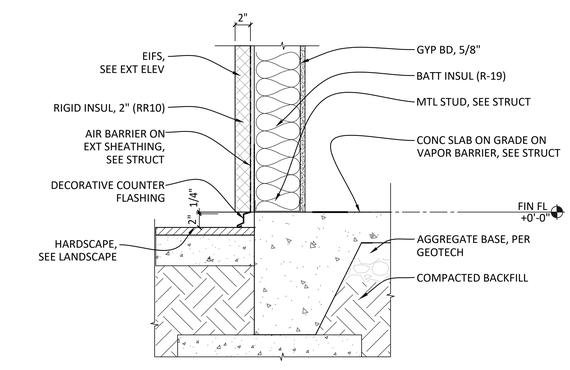

B6 SECTION @ EIFS / HARDSCAPE
A631 1-1/2" = 1'-0"

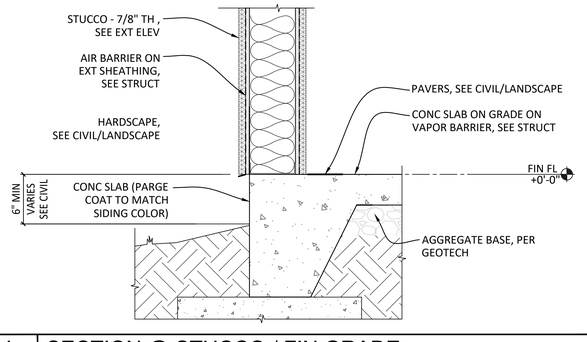

A4 SECTION @ STUCCO / FIN GRADE
A631 1-1/2" = 1'-0"

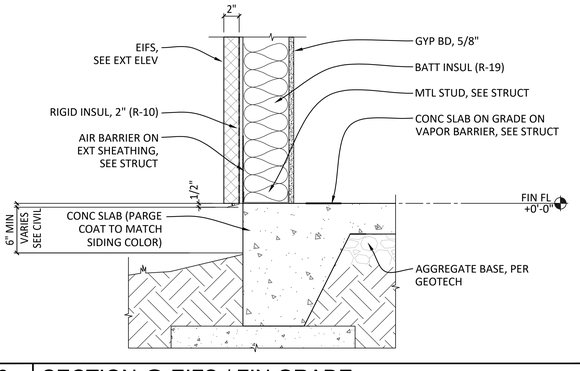

A6 SECTION @ EIFS / FIN GRADE
A631 1-1/2" = 1'-0"

KUO DIEDRICH CHI
730 PEACHTREE STREET, NE
STUDIO 325
ATLANTA, GEORGIA 30308
678.244.6270
www.KDCarchitects.com

ARCHITECT:

ARCH. REG: AR91344

CONSULTANT:

REVISIONS

DATE:	DESCRIPTION:
10/18/24	SCHEMATIC DESIGN
6/5/25	DESIGN DEVELOPMENT
10/23/25	50% CONSTRUCTION DOCS
11/14/25	PERMIT SET

PROJECT:

SERENITY SEASIDE RESORT

BUILDING #1

THE INN

186 SOUTH BAY SHORE DRIVE, EASTPOINT, FL 32328

Serenity Seaside Operations, LLC
174 Watercolor Way, PMB 410
Santa Rosa Beach, Florida 32459

JOB NUMBER: 23019.1

DATE: --/--/----

TITLE: SECTIONS & DETAILS

SHEET: A631

K:\Projects\23\23019\DWGs\Serenity_Bldg-1_Inn\Sheets\23019.1-A631.dwg Plotted: Nov 14, 2025 - 2:40pm by lshwar

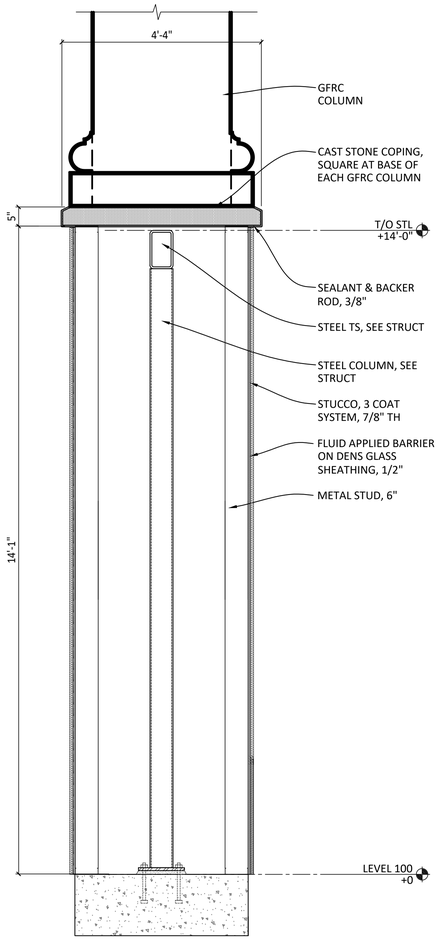

A1	WALL SECTION @ BASE OF GFRC COLUMN
A641	3/4" = 1'-0"

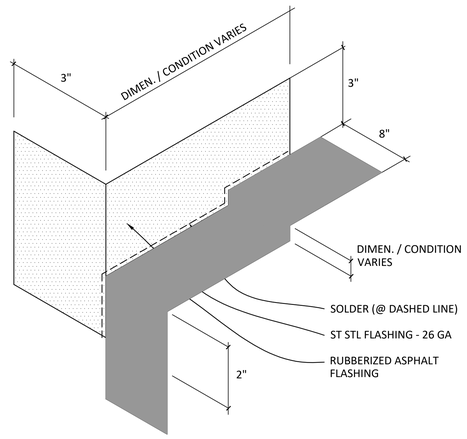

C3	ISOMETRIC @ DRIP FLASHING END DAM
A641	NTS

NOTES:

1. PROVIDE @ ALL WINDOW SILLS
2. GC TO VERIFY ALL DIMENSIONS

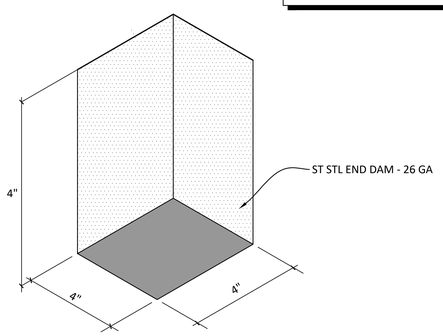

A3	ISOMETRIC FLASHING @ END DAM
A641	NTS

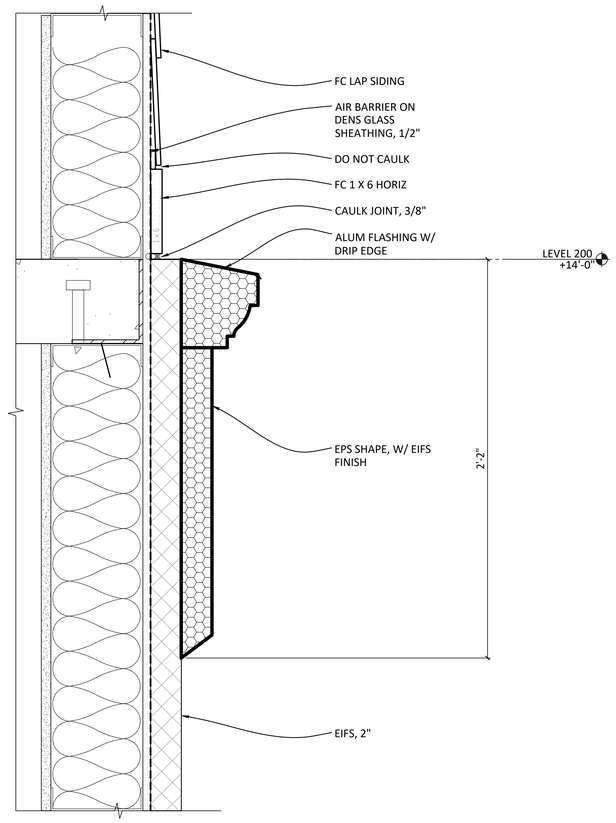

D5	SECTION @ EIFS TO SIDING TRANSITION
A641	3" = 1'-0"

SHEET NOTES / LEGEND

GENERAL NOTES

A. ALL SECTIONS & DETAILS - REFERENCE GENERAL NOTES ON SHEET A501
B. METAL ROOF DETAILS, SHEET A361
C. FLAT ROOF DETAILS, SHEET A371
D. FIBER CEMENT DETAILS, SHEET A671
E. EIFS DETAILS, SHEETS A673 & A674
F. STUCCO DETAILS, SHEETS A681 & A682
G. SITE DETAILS, SHEETS A691 & A692
H. INTERIOR PARTITION DETAILS, SHEET A851
I. UL PENETRATIONS & ASSEMBLIES, SHEETS A881 - A885
J. ENERGY CODE NOTES, SHEET G103

KUO DIEDRICH CHI
730 PEACHTREE STREET, NE
STUDIO 325
ATLANTA, GEORGIA 30308
678.244.6270
www.KDCarchitects.com

ARCHITECT:

ARCH. REG: AR91344

CONSULTANT:

REVISIONS

DATE:	DESCRIPTION:
10/18/24	SCHEMATIC DESIGN
6/5/25	DESIGN DEVELOPMENT
10/23/25	50% CONSTRUCTION DOCS
11/14/25	PERMIT SET

PROJECT:

SERENITY SEASIDE RESORT

BUILDING #1

THE INN

186 SOUTH BAY SHORE DRIVE, EASTPOINT, FL 32328

Serenity Seaside Operations, LLC
174 Watercolor Way, PMB 410
Santa Rosa Beach, Florida 32459

JOB NUMBER: 23019.1

DATE: --/--/----

TITLE: FLASHING & WATERPROOFING DETAILS

SHEET: A641

K:\Projects\23\23019\DWGs\Serenity_Bldg-1_Inn\Sheets\23019.1-A641.dwg Plotted: Nov 13, 2025 - 6:23pm by CalebLawrence

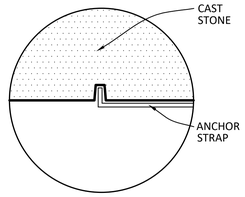

NOTE: ANCHOR REVEAL TO RUN ALONG THE FULL LENGTH OF THE CAST STONE MEMBER.

A SECTION

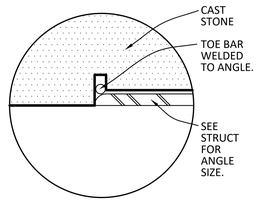

NOTE: ANCHOR REVEAL TO RUN ALONG THE FULL LENGTH OF THE CAST STONE MEMBER.

B SECTION

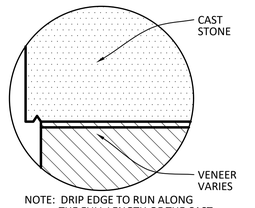

NOTE: DRIP EDGE TO RUN ALONG THE FULL LENGTH OF THE CAST STONE MEMBER.

C SECTION @ OVERHANG

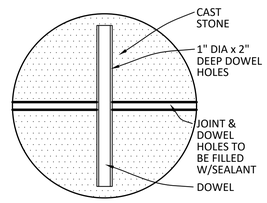

TYPICAL VERTICAL OR HORIZONTAL CAST STONE TO CAST STONE CONNECTION

D SECTION

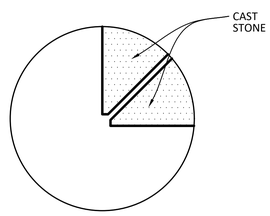

E DETAIL @ OUTSIDE CORNER

GENERAL NOTES:

1. ALL CAST STONE IS TO RECEIVE ONE OR MORE TYPES OF ANCHORING SHOWN ON DETAILS, UNLESS CAST STONE IS SHOWN ON STRUCTURAL DRAWINGS WITH ANOTHER SUPPORTING METHOD.
2. ANY CAST STONE MEMBERS THAT OVERHANG OTHER EXTERIOR SURFACES BY 1" OR MORE IS TO RECEIVE A DRIP EDGE.
3. CAST STONE MANUF IS TO REFERENCE ALL SECTIONS, ELEVATIONS & DETAILS TO DETERMINE CAST STONE SIZES, SHAPES AND LOCATIONS. ALL CAST STONE LENGTHS SHOWN ARE MAX. SPANS, MANUF. TO DETERMINE NECESSARY SPANS. MANUF. SHOP DRAWINGS TO SHOW ALL CALCULATED SPANS FOR CAST STONE.
4. DRIP EDGES AND ANCHOR REVEALS ARE NOT TO EXTEND INTO ANY FINISH SIDES OF CAST STONE.
5. CAST STONE TO BE DESIGNED TO LAY OUT SYMETRICALLY ON ALL ELEVATIONS.
6. GC TO PROVIDE AND COORDINATE ALL MISC. STEEL REQUIRED FOR CAST STONE INSTALLATION.
7. CAULK COLOR & MORTAR COLOR TO MATCH CAST STONE COLOR

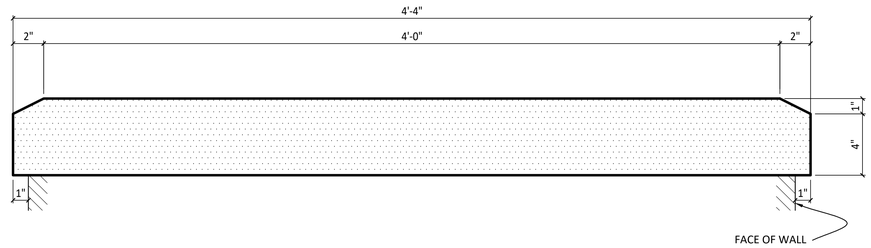

B COPING @ GFRC SOLUMN

NOTE: SQUARE IN PLAN, MITER OUTSIDE CORNERS

B2	CAST STONE SHAPE
A651	3" = 1'-0"

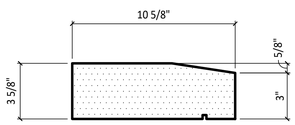

C WINDOW SILL

AT WINDOWS IN CMU STAIR WALLS

NOTE: MAX LENGTH 48"

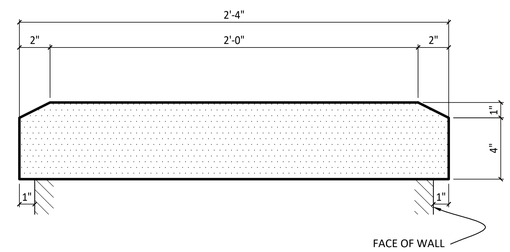

B COPING @ GFRC SOLUMN

NOTE: MAX LENGTH 48"

A1	CAST STONE SHAPE
A651	3" = 1'-0"

A3	CAST STONE SHAPE
A651	3" = 1'-0"

A5	CAST STONE DETAILS (TYP)
A651	3" = 1'-0"

SHEET NOTES / LEGEND

1. -

GENERAL NOTES

A. -

KUO DIEDRICH CHI
730 PEACHTREE STREET, NE
STUDIO 325
ATLANTA, GEORGIA 30308
678.244.6270
www.KDCarchitects.com

ARCHITECT:

ARCH. REG: AR91344

CONSULTANT:

REVISIONS

DATE:	DESCRIPTION:
10/18/24	SCHEMATIC DESIGN
6/5/25	DESIGN DEVELOPMENT
10/23/25	50% CONSTRUCTION DOCS
11/14/25	PERMIT SET

PROJECT:

SERENITY SEASIDE RESORT

BUILDING #1

THE INN

186 SOUTH BAY SHORE DRIVE, EASTPOINT, FL 32328

Serenity Seaside Operations, LLC
174 Watercolor Way, PMB 410
Santa Rosa Beach, Florida 32459

JOB NUMBER: 23019.1

DATE: --/--/----

TITLE: CAST STONE DETAILS

SHEET: A651

K:\Projects\23\23019\DWGs\Serenity_Bldg-1_Inn\Sheets\23019.1-A651.dwg Plotted: Nov 13, 2025 - 6:24pm by ColebLawrence

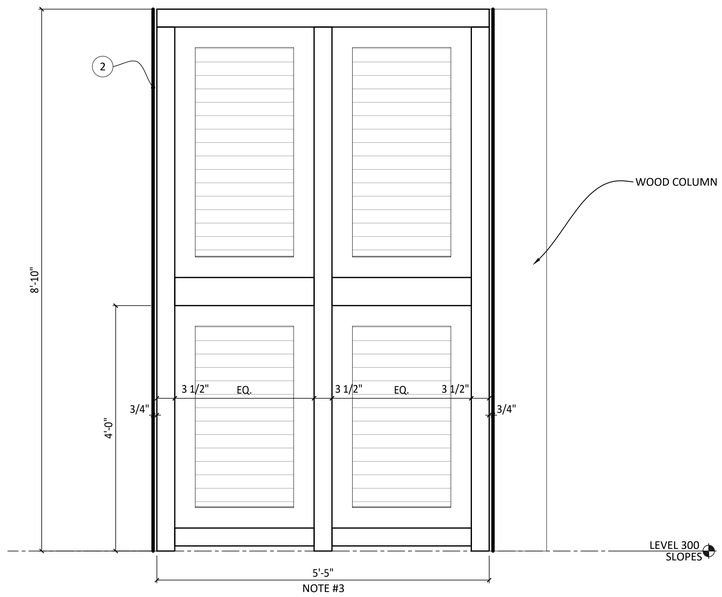

C2 | PRIVACY SCREEN ELEV & SECTION - TYPE "C" (LEVEL 300)

A661 | 1" = 1'-0"

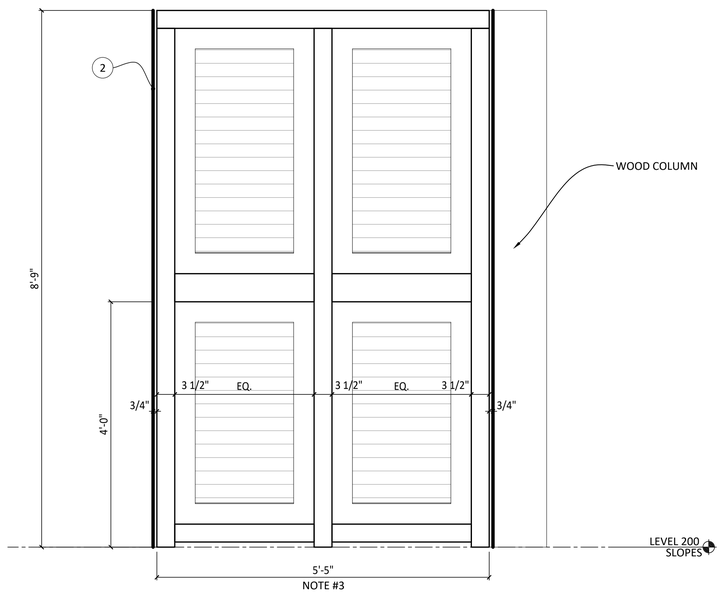

A2 | PRIVACY SCREEN ELEV & SECTION - TYPE "B" (LEVEL 200)

A661 | 1" = 1'-0"

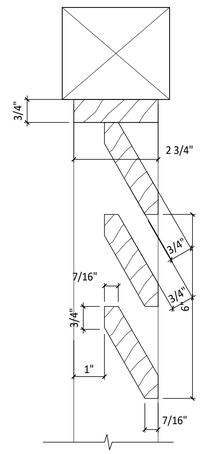

E5 | SECTION @ PRIVACY SCREEN

A661 | 6" = 1'-0"

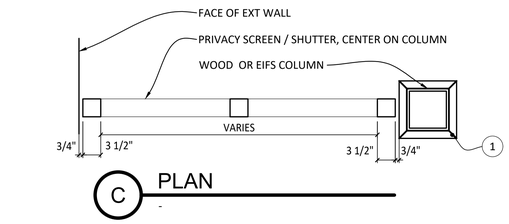

C PLAN

-

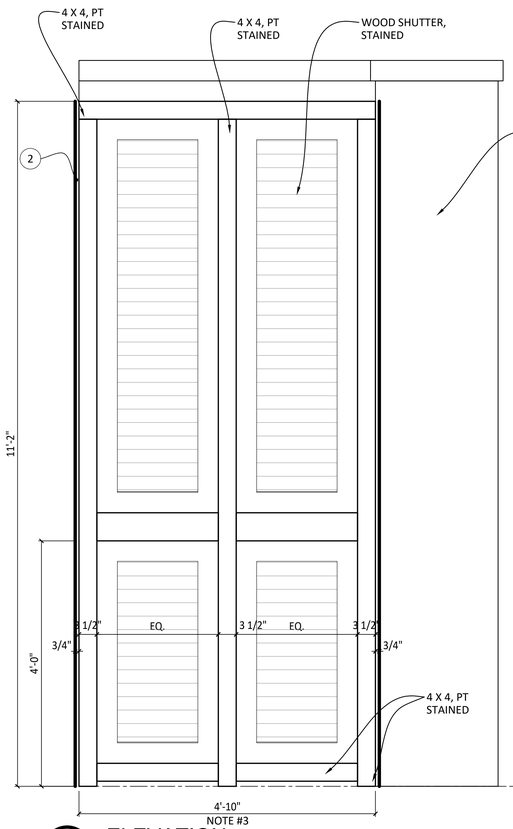

A ELEVATION

-

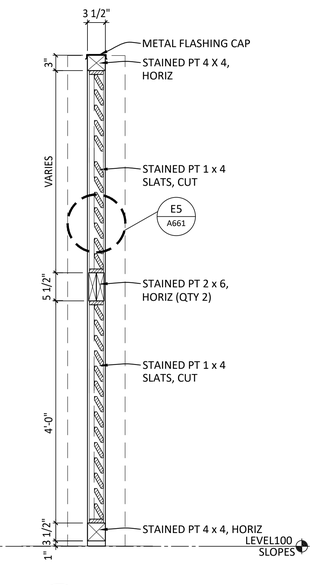

B SECTION

-

A5 | PRIVACY SCREEN ELEV & SECTION - TYPE "A" (LEVEL 100)

A661 | 1" = 1'-0"

SHEET NOTES / LEGEND

1. COLUMN/POST DIMENSIONS & MATERIALS VARY, GC VERIFY
2. FACE OF EXTERIOR VENEER OF EXTERIOR WALL
3. DEPTH OF BALCONIES VARIES, GC VERIFY ALL BALCONY DIMENSIONS/PRIVACY SCREEN LENGTH

GENERAL NOTES

A. TYPE "B2" PRIVACY SCREEN - SAME AS "B", EXCEPT WIDTH IS DIFFERENT, PER PLANS

B. TYPE "B3" PRIVACY SCREEN - SAME AS "B", EXCEPT WIDTH IS DIFFERENT, PER PLANS

C. TYPE "B4" PRIVACY SCREEN - SAME AS "B", EXCEPT WIDTH IS DIFFERENT, PER PLANS

D. TYPE "C2" PRIVACY SCREEN - SAME AS "B", EXCEPT WIDTH IS DIFFERENT, PER PLANS

E. TYPE "C3" PRIVACY SCREEN - SAME AS "B", EXCEPT WIDTH IS DIFFERENT, PER PLANS

F. TYPE "C4" PRIVACY SCREEN - SAME AS "B", EXCEPT WIDTH IS DIFFERENT, PER PLANS

KUO DIEDRICH CHI

730 PEACHTREE STREET, NE
STUDIO 325
ATLANTA, GEORGIA 30308
678.244.6270

www.KDCarchitects.com

ARCHITECT:

ARCH. REG: AR91344

CONSULTANT:

REVISIONS

DATE:	DESCRIPTION:
10/18/24	SCHEMATIC DESIGN
6/5/25	DESIGN DEVELOPMENT
10/23/25	50% CONSTRUCTION DOCS
11/14/25	PERMIT SET

PROJECT:

SERENITY SEASIDE RESORT

BUILDING #1

THE INN

186 SOUTH BAY SHORE DRIVE, EASTPOINT, FL 32328

Serenity Seaside Operations, LLC
174 Watercolor Way, PMB 410
Santa Rosa Beach, Florida 32459

JOB NUMBER: 23019.1

DATE: --/--/----

TITLE: EXTERIOR DETAILS - PRIVACY SCREENS

SHEET: A661

K:\Projects\23\23019\DWGs\Serenity_Bldg-1_inn\Sheets\23019.1-A661.dwg Plotted: Nov 13, 2025 - 6:24pm by ColebLawrence

GENERAL NOTES:

36" Dia Round Tapered Columns
Manufactured by
Architectural Mall, Inc
Available in: GFRC

ARCHITECTURAL MALL, INC
323 ST. PAUL BLVD
CAROL STREAM, IL 60188
877-279-9993

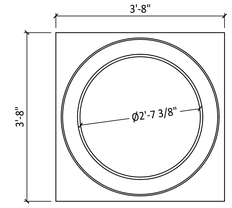

C CAPITAL PLAN
-

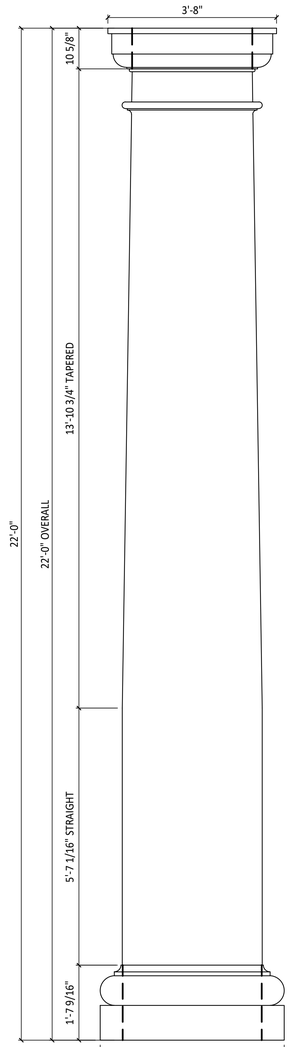

B ELEVATION
-

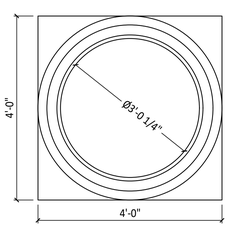

A BASE PLAN
-

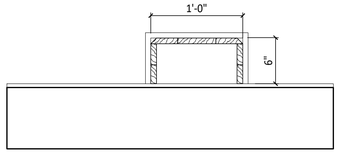

C PLAN DETAIL
AT SHAFT (ON EXT WALL)

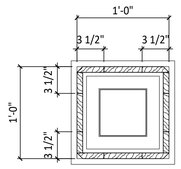

B PLAN DETAIL
AT SHAFT (FREE STANDING)

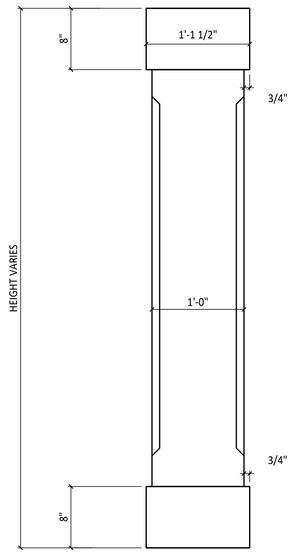

A ELEVATION
FREE STANDING

A1	DETAILS @ GFRC COLUMN
A662	3/4" = 1'-0"

A3	DETAILS @ FC COLUMNS
A662	1-1/2" = 1'-0"

A4	DETAILS @ FC RADIUS LOUVER
A662	1" = 1'-0"

HARDIE BOYS, INC.
954-784-8216
HARDIEBOYSINC.COM
SALES@HARDIEBOYSINC.COM

STANDARD BRACKETS, LOUVER FRAMES ALL HAVE A ½" WALL THICKNESS

ALL BRACKETS COME WITH PVC INSTALLATION CLEAT

HB BRACKETS CAN'T BE PAINTED DARKER COLORS (LRV OF 54 OR LOWER) UNLESS USING SPECIFIED OR APPROVED LIGHT REFLECTIVE PAINT.

HB BRACKET DESIGNS ARE LIMITED TO RADIUSES GREATER THAN 2"

E6	BRACKET NOTES
A662	1" = 1'-0"

NOTE:

DESIGN BASIS: HARDIE BOYS, HB EXTERIOR, STAINED

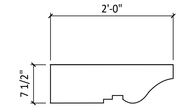

A SIDE
RT4622-2.5

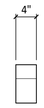

B FRONT
RT4622-2.5

C6	DETAILS @ EXTERIOR FC RAFTER TAILS
A662	1" = 1'-0"

NOTE:

DESIGN BASIS: HARDIE BOYS, HB EXTERIOR, STAINED

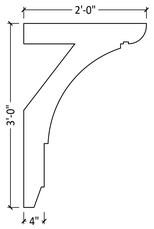

A SIDE
BKT3221-4-5.HP-4222-4.VP-4011-4



B FRONT
BKT3221-4-5.HP-4222-4.VP-4011-4

C6	DETAILS @ FC EXTERIOR BRACKETS
A662	1" = 1'-0"

NOTE:

DESIGN BASIS: HARDIE BOYS, HB EXTERIOR, STAINED

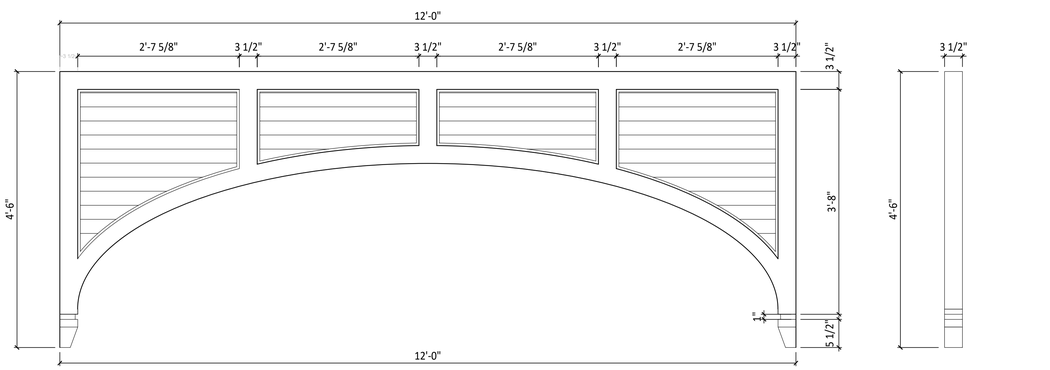

A ELEVATOIN
MODEL #2074-5-12 "NASSAU"

B SECTION
MODEL #2074-5-12 "NASSAU"

SHEET NOTES / LEGEND

1. -

GENERAL NOTES

A. -

KUO DIEDRICH CHI
730 PEACHTREE STREET, NE
STUDIO 325
ATLANTA, GEORGIA 30308
678.244.6270
www.KDCarchitects.com

ARCHITECT:

ARCH. REG: AR91344

CONSULTANT:

REVISIONS

DATE:	DESCRIPTION:
10/18/24	SCHEMATIC DESIGN
6/5/25	DESIGN DEVELOPMENT
10/23/25	50% CONSTRUCTION DOCS
11/14/25	PERMIT SET

PROJECT:

SERENITY SEASIDE RESORT

BUILDING #1

THE INN

186 SOUTH BAY SHORE DRIVE, EASTPOINT, FL 32328

Serenity Seaside Operations, LLC
174 Watercolor Way, PMB 410
Santa Rosa Beach, Florida 32459

JOB NUMBER: 23019.1

DATE: --/--/----

TITLE: EXTERIOR DETAILS

SHEET: A662

K:\Projects\23\23019\DWGs\Serenity_Bldg-1_Inn\Sheets\23019.1-A662.dwg Plotted: Nov 13, 2025 - 6:24pm by ColebLawrence

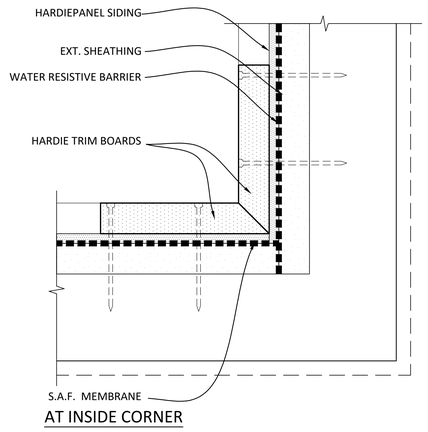

AT INSIDE CORNER

E1 HARDIE SIDING DETAIL

A671 NTS

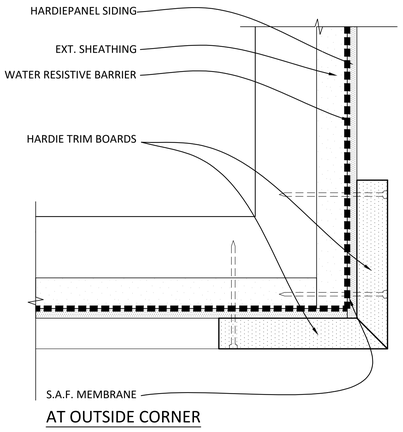

AT OUTSIDE CORNER

E3 HARDIE SIDING DETAIL

A671 NTS

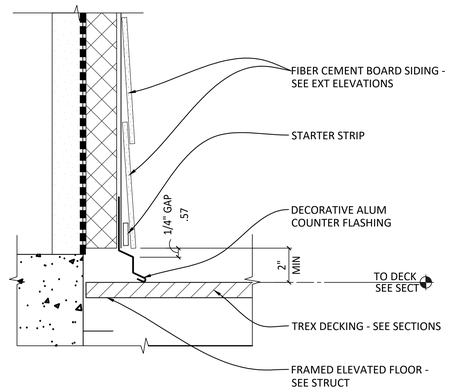

E4 HARDIE SIDING @ FIN FLOOR

A671 NTS

HARDIE-TRIM NOTES

GENERAL NOTES FOR HARDIE TRIM:
(APPLIES TO ALL WALL & BUILDING SECTION & DETAIL SHEETS)

A. DIV. 06: ALL FIBER CEMENT SIDING AND FIBER CEMENT TRIM IS BY JAMES HARDIE.

B. DIV. 06: ALL EXTERIOR HORIZ. LAP SIDING IS HARDIE PLANK 7-1/4 LAP SIDING W/ 6" EXPOSURE , TEXTURE IS CEDAR MILL (PAINTED)..

C. DIV. 06: ALL EXTERIOR VERTICAL BOARD AND BATTEN SIDING IS A 1 X 3 BATTEN AT 24" O.C. ON 5/16" HARDI PANEL (4' X 8' CUT AND INSTALLED VERTICALLY. TEXTURE OF BOTH IS CEDAR MILL. (PAINTED).

D. DIV. 06: ALL FIBER CEMENT TRIM IS 5/4 XLD HARDIE TRIM, TEXTURE IS SMOOTH (PAINTED).

E. DIV. 06: ALL FIBER CEMENT SIDING TO "BUTT TO" CORNER BOARDS (INSIDE AND OUTSIDE CORNERS.

F. DIV. 06: FIBER CEMENT SIDING ON CMU WALLS TO HAVE PT 1 X 4 FURRING STRIPS AT 16" O.C. (INSTALLED VERTICALLY).

SHEET NOTES / LEGEND

1. -

GENERAL NOTES

A. -

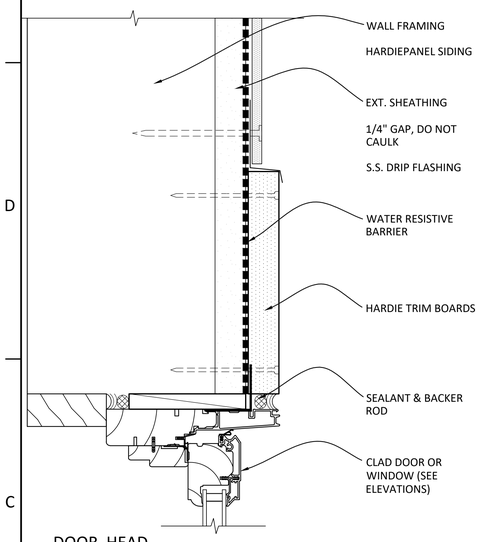

DOOR HEAD

C1 HARDIE SIDING DETAIL

A671 NTS

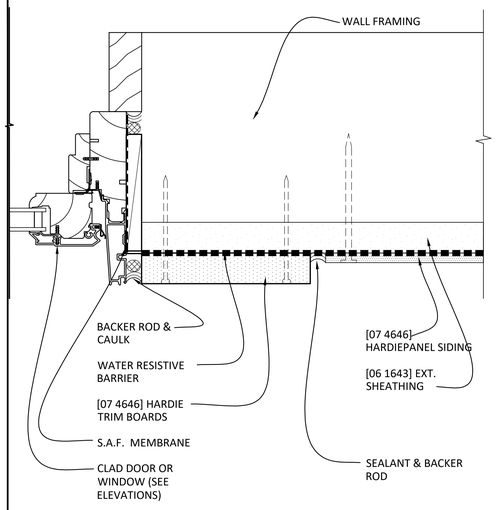

DOOR JAMB

C3 HARDIE SIDING DETAIL

A671 NTS

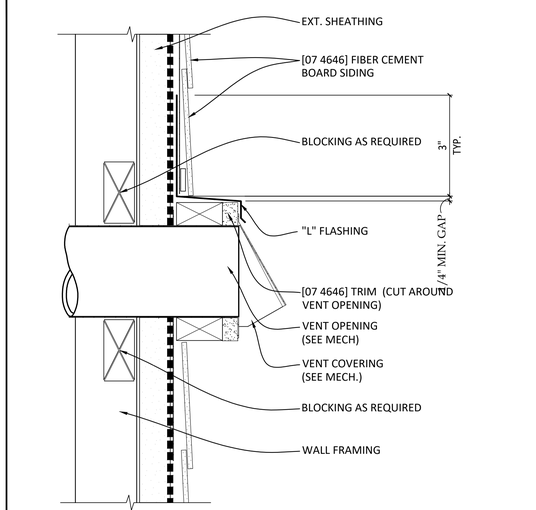

C4 VENT TO WALL W/ FLASHING (@ HARDIE)

A671 FULL

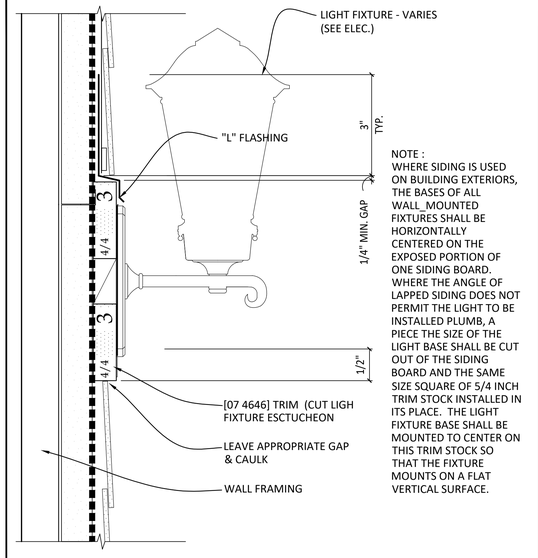

NOTE :
WHERE SIDING IS USED ON BUILDING EXTERIORS, THE BASES OF ALL WALL_MOUNTED FIXTURES SHALL BE HORIZONTALLY CENTERED ON THE EXPOSED PORTION OF ONE SIDING BOARD. WHERE THE ANGLE OF LAPPED SIDING DOES NOT PERMIT THE LIGHT TO BE INSTALLED PLUMB, A PIECE THE SIZE OF THE LIGHT BASE SHALL BE CUT OUT OF THE SIDING BOARD AND THE SAME SIZE SQUARE OF 5/4 INCH TRIM STOCK INSTALLED IN ITS PLACE. THE LIGHT FIXTURE BASE SHALL BE MOUNTED TO CENTER ON THIS TRIM STOCK SO THAT THE FIXTURE MOUNTS ON A FLAT VERTICAL SURFACE.

C6 WALL LIGHT FIXTURE (@ HARDIE)

A671 FULL

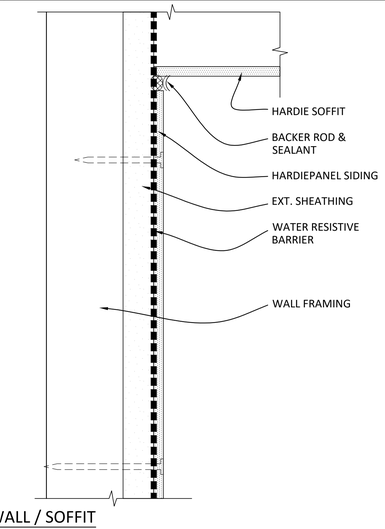

WALL / SOFFIT

A1 HARDIE SIDING DETAIL

A671 FULL

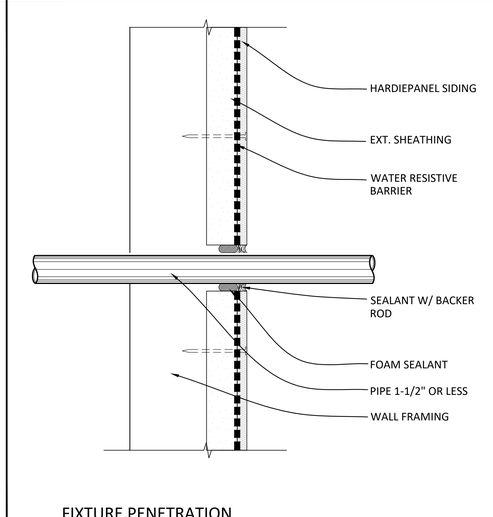

FIXTURE PENETRATION

A3 HARDIE SIDING DETAIL

A671 FULL

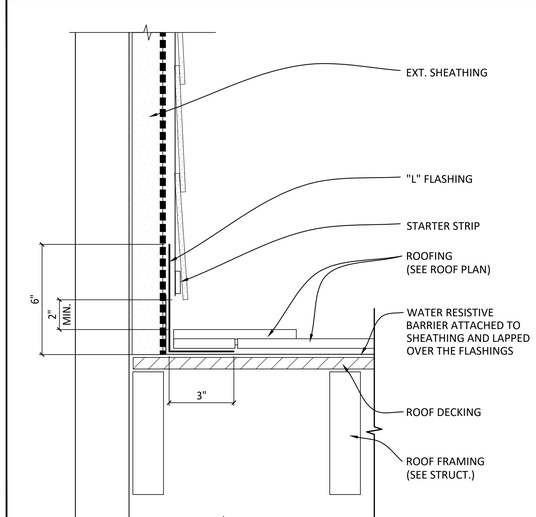

A4 WALL FLASHING (@ HARDIE / ROOF)

A671 FULL

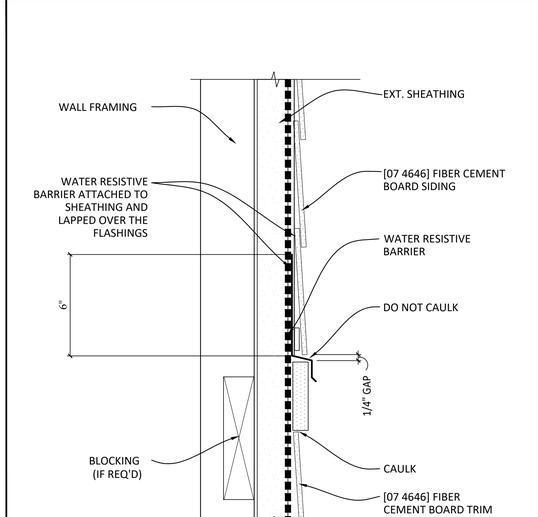

A6 HARDIE TRIM TO WALL W/ FLASHING

A671 FULL

KUO DIEDRICH CHI
730 PEACHTREE STREET, NE
STUDIO 325
ATLANTA, GEORGIA 30308
678.244.6270
www.KDCarchitects.com

ARCHITECT:

ARCH. REG: AR91344

CONSULTANT:

REVISIONS

DATE:	DESCRIPTION:
10/18/24	SCHEMATIC DESIGN
6/5/25	DESIGN DEVELOPMENT
10/23/25	50% CONSTRUCTION DOCS
11/14/25	PERMIT SET

PROJECT:

SERENITY SEASIDE RESORT

BUILDING #1

THE INN

186 SOUTH BAY SHORE DRIVE, EASTPOINT, FL 32328

Serenity Seaside Operations, LLC
174 Watercolor Way, PMB 410
Santa Rosa Beach, Florida 32459

JOB NUMBER: 23019.1

DATE: --/--/----

TITLE: FIBER CEMENT SIDING DETAILS

SHEET: A671

K:\Projects\23\23019\DWGs\Serenity_Bldg-1_Inn\Sheets\23019.1-A671.dwg Plotted: Nov 13, 2025 - 6:24pm by CalebLawrence

EXTERIOR MOULDING NOTES

GENERAL NOTES:

A. EXTERIOR SIDING IS ALL FIBER CEMENT - PAINTED

B. EXTERIOR WD / HEAVY TIMBER - WESTERN RED CEDAR - STAINED

C. EXTERRIOR MOULDING SCHEDULE:

"A" BASE @ ALL FC SIDING
"B" HEAD OF DOORS & WINDOWS IN FC SIDING
"C" SILL OF WINDOWS IN FC SIDING
"D" TRIM @ EXT DOORS & WINDOWS, IN FC SIDING
"E" TRIM @ EXT DOORS & WINDOWS, IN FC SIDING
"F" CEILING BEAMS @ PORTE COCHERE
"G" TBD
"H" PEDIMENT

SHEET NOTES / LEGEND

1. -

GENERAL NOTES

A. -

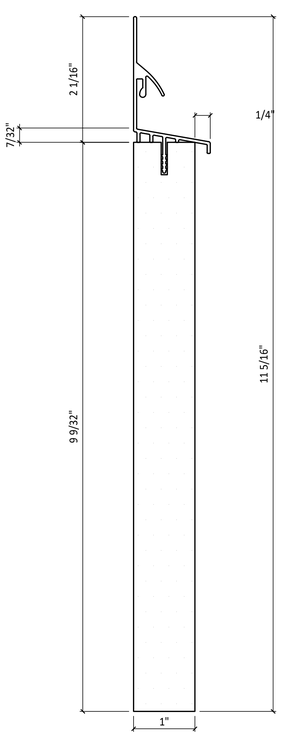

A AZEK
Universal Skirt Board 5/4" x10" AFUS11216

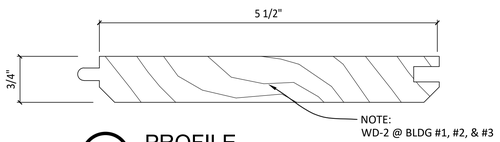

G PROFILE
1 x 6 T & G

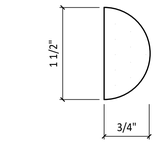

H PROFILE
HORIZ TRIM @ FRIEZE

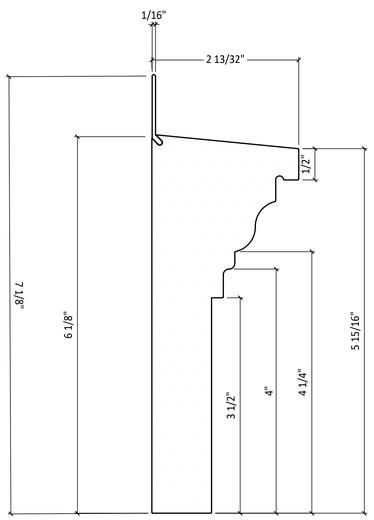

B AZEK
Crosshead Pediment (AZM-6216)

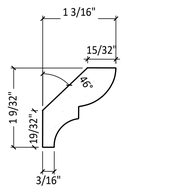

E PROFILE
AZEK, BED MOULDING



F AZEK
Trimboard 1" x 4" AT10004144

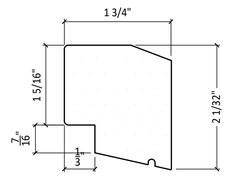

C AZEK
Historic Sill (AZM-6930)

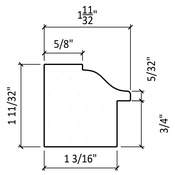

D AZEK
Back Band (AZM-6931)

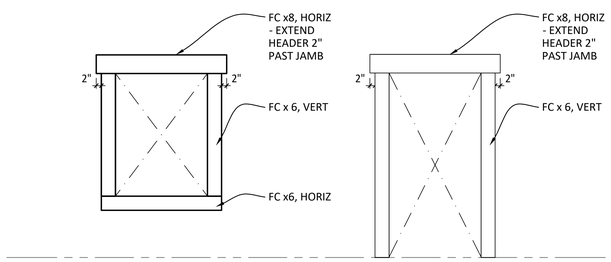

B1 WINDOW
FIBER CEMENT TRIM

B2 DOOR
FIBER CEMENT TRIM

A1	MOULDING PROFILES - EXTERIOR
A672	FULL

A5	ELEVATIONS @ EXTERIOR CASING / TRIM (FIBER CEMENT)
A672	1/2" = 1'-0"

KUO DIEDRICH CHI
730 PEACHTREE STREET, NE
STUDIO 325
ATLANTA, GEORGIA 30308
678.244.6270
www.KDCarchitects.com

ARCHITECT:

ARCH. REG: AR91344

CONSULTANT:

REVISIONS

DATE:	DESCRIPTION:
10/18/24	SCHEMATIC DESIGN
6/5/25	DESIGN DEVELOPMENT
10/23/25	50% CONSTRUCTION DOCS
11/14/25	PERMIT SET

PROJECT:
SERENITY SEASIDE RESORT
BUILDING #1
THE INN
186 SOUTH BAY SHORE DRIVE, EASTPOINT, FL 32328

Serenity Seaside Operations, LLC
174 Watercolor Way, PMB 410
Santa Rosa Beach, Florida 32459

JOB NUMBER: 23019.1

DATE: --/--/----

TITLE: EXTERIOR PROFILES

SHEET: A672

K:\Projects\23\23019\DWGs\Serenity_Bldg-1_Inn\Sheets\23019.1-A672.dwg Plotted: Nov 13, 2025 - 6:24pm by ColebLawrence

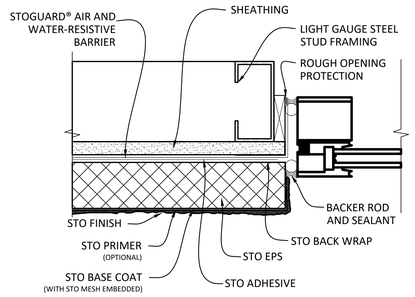

E2	DTL @ EIFS - WINDOW JAMB
A673	1'-0" = 1'-0"

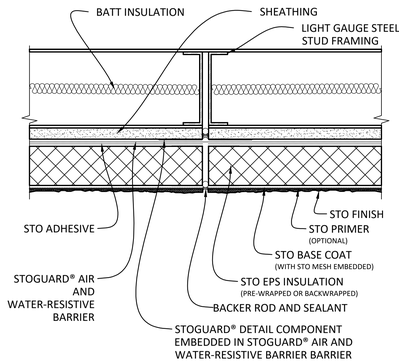

E4	DTL @ EIFS - VERTICAL EXP JOINT IN BACK-UP WALL
A673	1'-0" = 1'-0"

SHEET NOTES / LEGEND

1. -

GENERAL NOTES

A. THESE ARE TYP DETAILS ARE BASED ON STO THERM CI, MANUF BY STO

B. THESE DETAILS NEED TO MODIFIED AS REQ'D FOR THIS PROJECT

C. REFER TO STOGUARD PRODUCT USE CHART (TABLE 1.1) FOR STOGUARD DETAIL COMPONENTS; JOINT TREATMENT, ROUGH OPENING, BACKING FOR MASONRY ANCHORS, OR TRANSITIONS TO DISSIMILAR MATERIALS, JOINTS AND SEAMS IN CONSTRUCTION.

D. REFER TO GENERAL NOTES FOR SPECIFIC INFORMATION & DESIGN GUIDANCE ON WALL ASSEMBLY COMPONENTS.

E. COMPONENTS NOT IDENTIFIED AS STO ARE FURNISHED BY OTHER MANUFACTURERS AND ARE NOT NECESSARILY INSTALLED BY TRADES WHO INSTALL STO PRODUCTS. REFER TO PROJECT SPECIFIC CONTRACT DOCUMENTS.

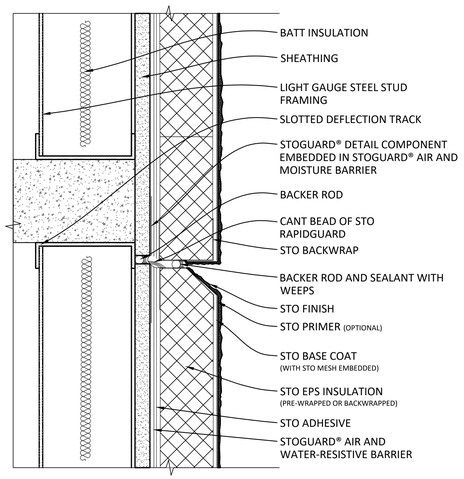

C1	DTL @ EIFS - FLOOR LINE W/ DEFLECT
A673	1'-0" = 1'-0"

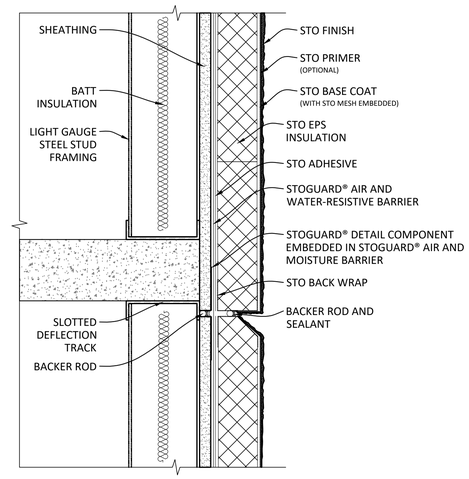

C3	DTL @ EIFS - FLOOR LINE W/ DEFLECT
A673	1'-0" = 1'-0"

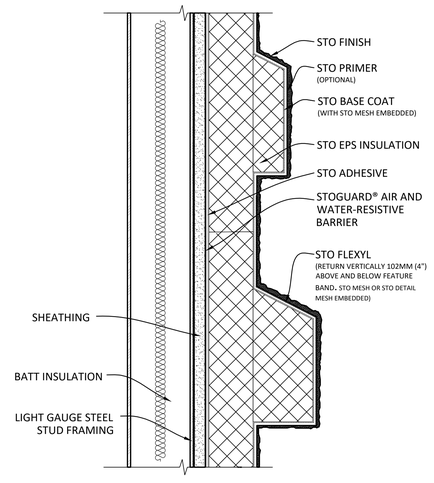

C5	DTL @ EIFS - AESTHETIC FEATURE BAND
A673	1'-0" = 1'-0"

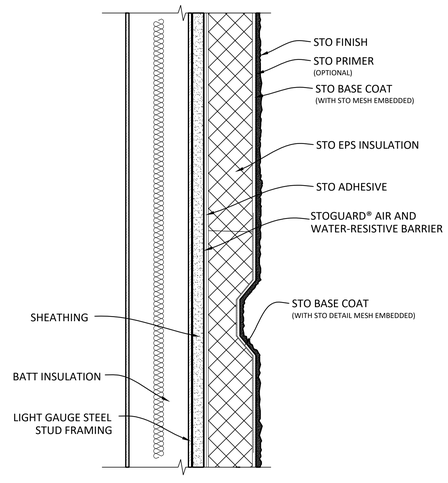

C6	DTL @ EIFS - AESTHETIC REVEAL - OPT 1
A673	1'-0" = 1'-0"

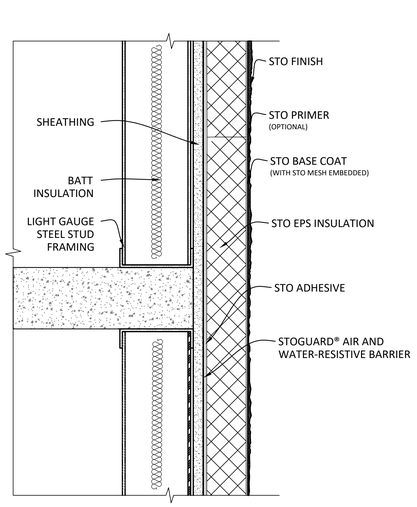

A1	DTL @ EIFS - FLOOR LINE W/O DEFLECT
A673	1'-0" = 1'-0"

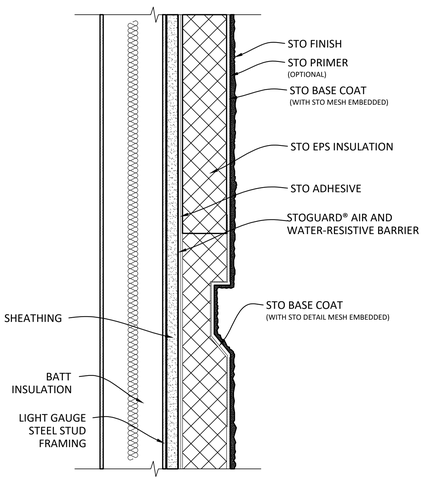

A3	DTL @ EIFS - AESTHETIC REVEAL - OPT 2
A673	1'-0" = 1'-0"

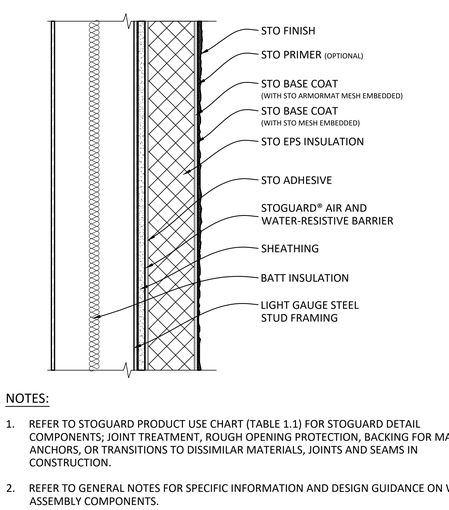

A5	DTL @ EIFS-ULTRA-HIGH IMPACT RESIST
A673	1'-0" = 1'-0"

NOTES:

1. REFER TO STOGUARD PRODUCT USE CHART (TABLE 1.1) FOR STOGUARD DETAIL COMPONENTS; JOINT TREATMENT, ROUGH OPENING PROTECTION, BACKING FOR MASONRY ANCHORS, OR TRANSITIONS TO DISSIMILAR MATERIALS, JOINTS AND SEAMS IN CONSTRUCTION.
2. REFER TO GENERAL NOTES FOR SPECIFIC INFORMATION AND DESIGN GUIDANCE ON WALL ASSEMBLY COMPONENTS.
3. COMPONENTS NOT IDENTIFIED AS STO ARE FURNISHED BY OTHER MANUFACTURERS AND ARE NOT NECESSARILY INSTALLED BY TRADES WHO INSTALL THE STO PRODUCTS. REFER TO PROJECT SPECIFIC CONTRACT DOCUMENTS.

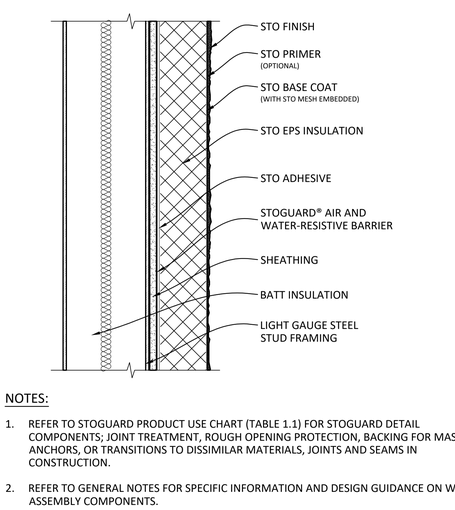

A6	DTL @ EIFS - SYSTEM COMP
A673	1'-0" = 1'-0"

NOTES:

1. REFER TO STOGUARD PRODUCT USE CHART (TABLE 1.1) FOR STOGUARD DETAIL COMPONENTS; JOINT TREATMENT, ROUGH OPENING PROTECTION, BACKING FOR MASONRY ANCHORS, OR TRANSITIONS TO DISSIMILAR MATERIALS, JOINTS AND SEAMS IN CONSTRUCTION.
2. REFER TO GENERAL NOTES FOR SPECIFIC INFORMATION AND DESIGN GUIDANCE ON WALL ASSEMBLY COMPONENTS.
3. COMPONENTS NOT IDENTIFIED AS STO ARE FURNISHED BY OTHER MANUFACTURERS AND ARE NOT NECESSARILY INSTALLED BY TRADES WHO INSTALL THE STO PRODUCTS. REFER TO PROJECT SPECIFIC CONTRACT DOCUMENTS.

KUO DIEDRICH CHI
730 PEACHTREE STREET, NE
STUDIO 325
ATLANTA, GEORGIA 30308
678.244.6270
www.KDCarchitects.com

ARCHITECT:

ARCH. REG: AR91344

CONSULTANT:

REVISIONS

DATE:	DESCRIPTION:
10/18/24	SCHEMATIC DESIGN
6/5/25	DESIGN DEVELOPMENT
10/23/25	50% CONSTRUCTION DOCS
11/14/25	PERMIT SET

PROJECT:

SERENITY SEASIDE RESORT

BUILDING #1

THE INN

186 SOUTH BAY SHORE DRIVE, EASTPOINT, FL 32328

Serenity Seaside Operations, LLC
174 Watercolor Way, PMB 410
Santa Rosa Beach, Florida 32459

JOB NUMBER: 23019.1

DATE: --/--/----

TITLE: DETAILS AT EIFS

SHEET: A673

K:\Projects\23\23019\DWGs\Serenity_Bldg-1_Inn\Sheets\23019.1-A673.dwg Plotted: Nov 13, 2025 - 6:25pm by ColebLawrence

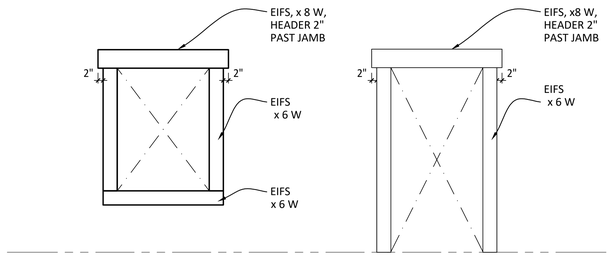

A1 WINDOW — EIFS

A2 DOOR — EIFS

E2 ELEVATIONS @ EXTERIOR CASING / TRIM (EIFS)

A674 | 1/2" = 1'-0"

GENERAL NOTES

A. THESE ARE TYP DETAILS ARE BASED ON STO THERM CI, MANUF BY STO

B. THESE DETAILS NEED TO MODIFIED AS REQ'D FOR THIS PROJECT

C. REFER TO STOGUARD PRODUCT USE CHART (TABLE 1.1) FOR STOGUARD DETAIL COMPONENTS; JOINT TREATMENT, ROUGH OPENING, BACKING FOR MASONRY ANCHORS, OR TRANSITIONS TO DISSIMILAR MATERIALS, JOINTS AND SEAMS IN CONSTRUCTION.

D. REFER TO GENERAL NOTES FOR SPECIFIC INFORMATION & DESIGN GUIDANCE ON WALL ASSEMBLY COMPONENTS.

E. COMPONENTS NOT IDENTIFIED AS STO ARE FURNISHED BY OTHER MANUFACTURERS AND ARE NOT NECESSARILY INSTALLED BY TRADES WHO INSTALL STO PRODUCTS. REFER TO PROJECT SPECIFIC CONTRACT DOCUMENTS.

SHEET NOTES / LEGEND

1. -

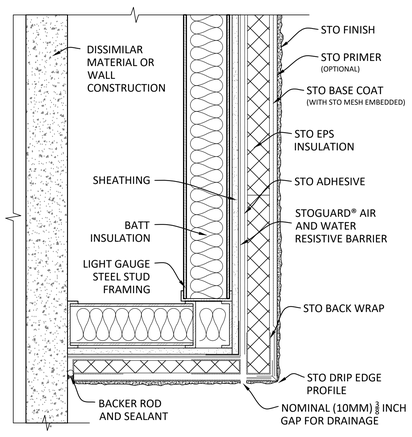

C1 | DTL @ EIFS - SOFFIT: INSUL & UNVENT

A674 | 1'-0" = 1'-0"

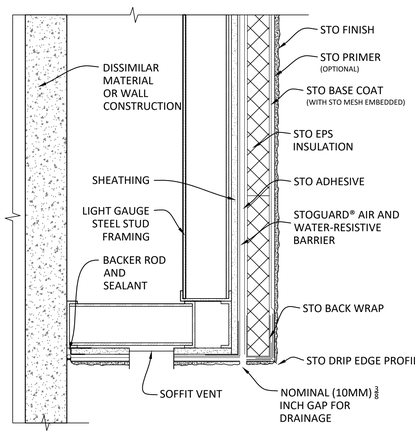

C3 | DTL @ EIFS - SOFFIT: UNINSUL & VENT

A674 | 1'-0" = 1'-0"

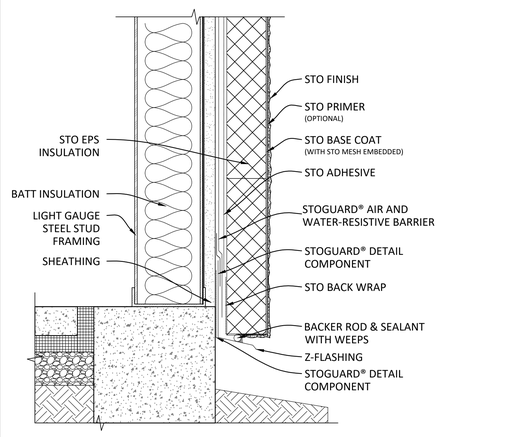

C5 | DTL @ EIFS - @ FINISH GRADE #1

A674 | 1'-0" = 1'-0"

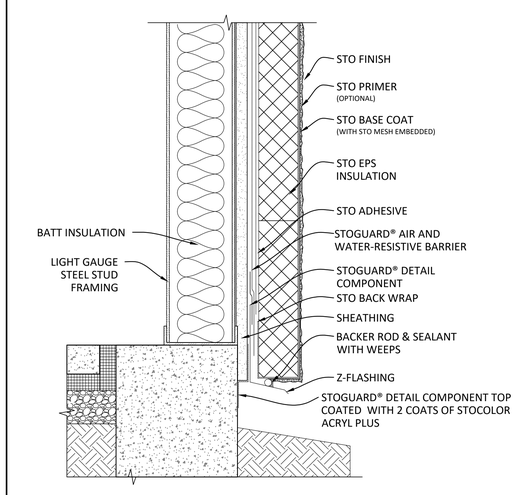

C6 | DTL @ EIFS - @ FINISH GRADE #2

A674 | 1'-0" = 1'-0"

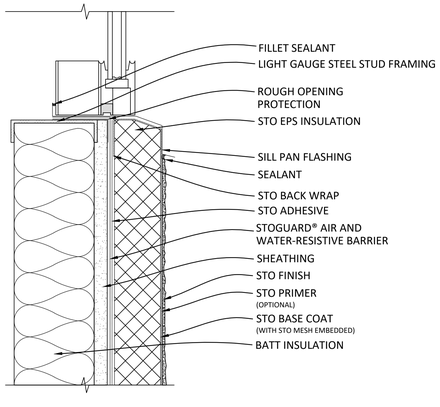

A1 | DTL @ EIFS - WINDOW SILL

A674 | 1'-0" = 1'-0"

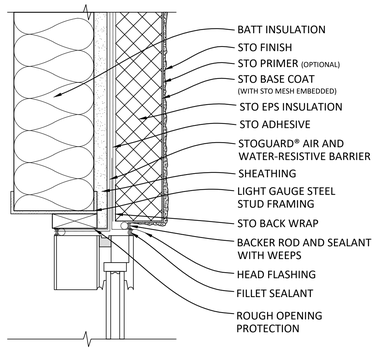

A3 | DTL @ EIFS - WINDOW HEAD

A674 | 1'-0" = 1'-0"

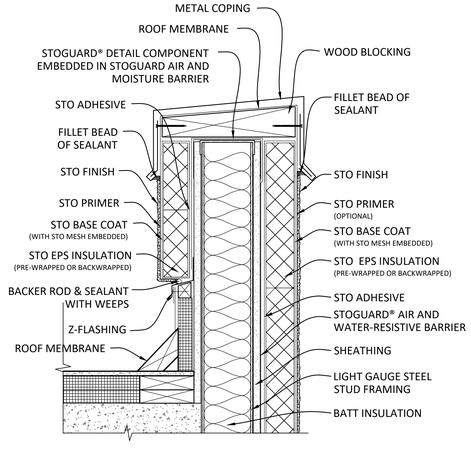

A5 | DTL @ EIFS - TERMINATION AT PARAPET

A674 | 1'-0" = 1'-0"

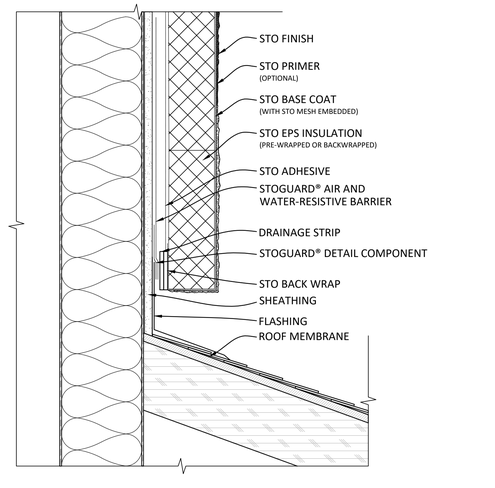

A6 | DTL @ EIFS - FLASHING AT ROOF

A674 | 1'-0" = 1'-0"

KUO DIEDRICH CHI
730 PEACHTREE STREET, NE
STUDIO 325
ATLANTA, GEORGIA 30308
678.244.6270
www.KDCarchitects.com

ARCHITECT:

ARCH. REG: AR91344

CONSULTANT:

REVISIONS

DATE:	DESCRIPTION:
10/18/24	SCHEMATIC DESIGN
6/5/25	DESIGN DEVELOPMENT
10/23/25	50% CONSTRUCTION DOCS
11/14/25	PERMIT SET

PROJECT:

SERENITY SEASIDE RESORT

BUILDING #1

THE INN

186 SOUTH BAY SHORE DRIVE, EASTPOINT, FL 32328

Serenity Seaside Operations, LLC
174 Watercolor Way, PMB 410
Santa Rosa Beach, Florida 32459

JOB NUMBER: 23019.1

DATE: --/--/----

TITLE: DETAILS AT EIFS

SHEET: A674

K:\Projects\23\23019\DWGs\Serenity_Bldg-1_Inn\Sheets\23019.1-A674.dwg Plotted: Nov 13, 2025 - 6:25pm by CalebLawrence

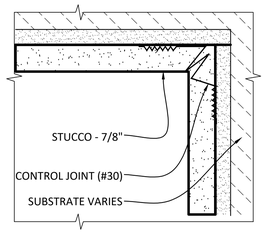

E1 PLAN DTL @ STUCCO CORNER

A681 | 6" = 1'-0"

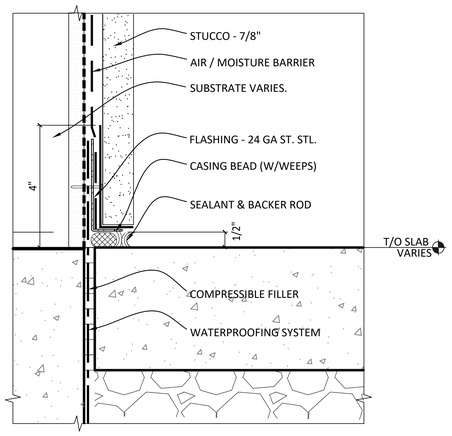

D1 SECT @ STUCCO / HARDSCAPE

A681 | 6" = 1'-0"

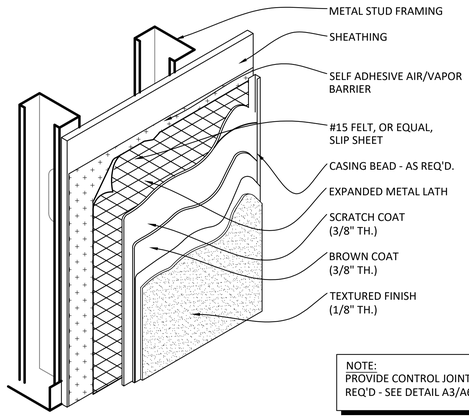

NOTE:
PROVIDE CONTROL JOINTS AS REQ'D - SEE DETAIL A3/A682

B1 ISOMETRIC @ STUCCO ON MTL STUDS

A681 | FULL

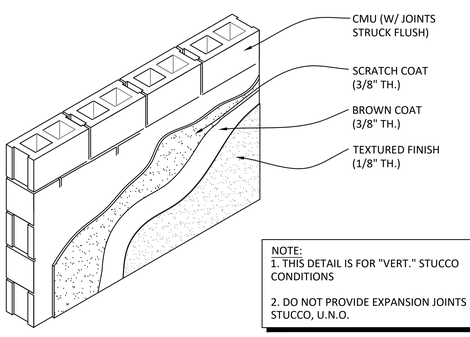

NOTE:
1. THIS DETAIL IS FOR "VERT." STUCCO CONDITIONS

2. DO NOT PROVIDE EXPANSION JOINTS IN STUCCO, U.N.O.

A1 ISOMETRIC @ STUCCO ON CMU

A681 | FULL

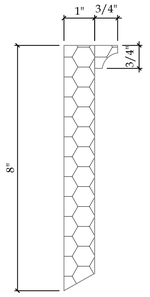

D PROFILE
TBD

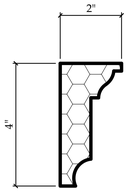

C PROFILE
TBD



B PROFILE
HORIZ. COVE MOULDING

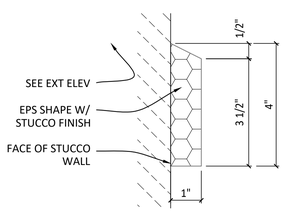

A PROFILE
HORIZ BAND

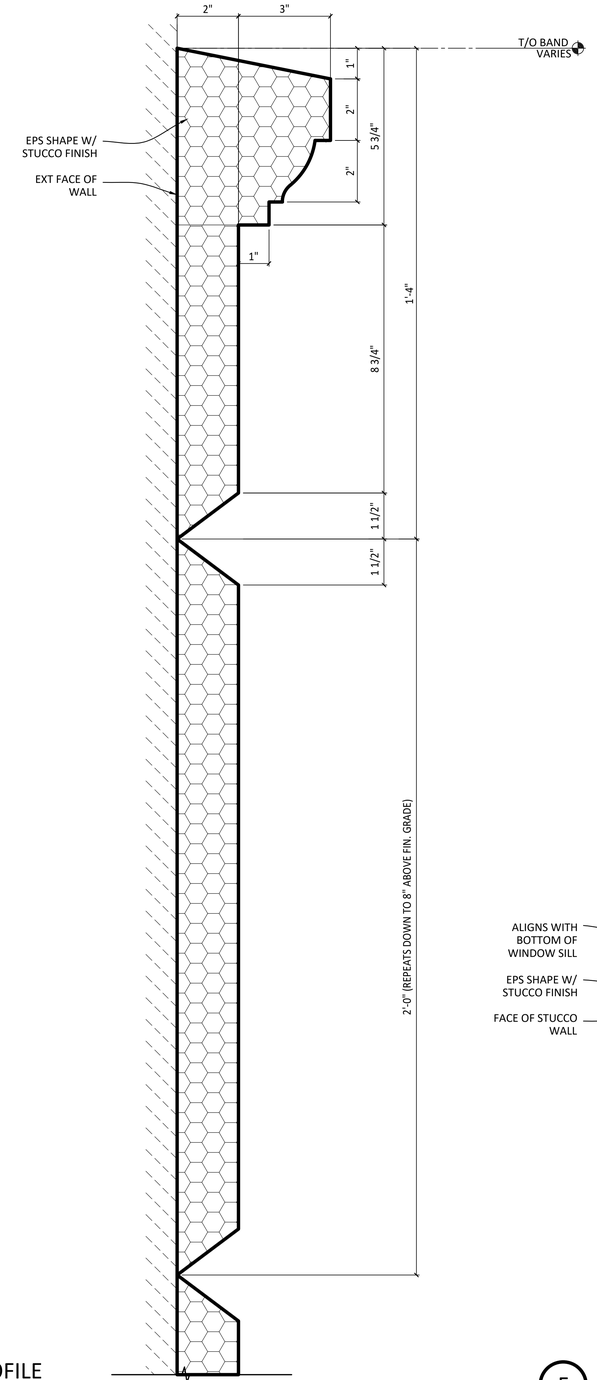

E PROFILE

A3 SHAPE PROFILES @ EIFS

A681 | 6" = 1'-0"

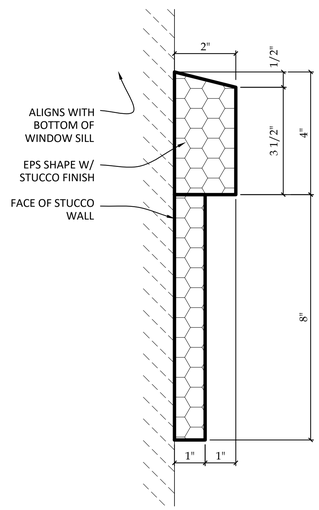

F PROFILE

SHEET NOTES / LEGEND

1. -

GENERAL NOTES

A. REFER TO SPEC SECTION 09 2423 - PORTLAND CEMENT STUCCO

KUO DIEDRICH CHI
730 PEACHTREE STREET, NE
STUDIO 325
ATLANTA, GEORGIA 30308
678.244.6270
www.KDCarchitects.com

ARCHITECT:

ARCH. REG: AR91344

CONSULTANT:

REVISIONS

DATE:	DESCRIPTION:
10/18/24	SCHEMATIC DESIGN
6/5/25	DESIGN DEVELOPMENT
10/23/25	50% CONSTRUCTION DOCS
11/14/25	PERMIT SET

PROJECT:

SERENITY SEASIDE RESORT

BUILDING #1

THE INN

186 SOUTH BAY SHORE DRIVE, EASTPOINT, FL 32328

Serenity Seaside Operations, LLC
174 Watercolor Way, PMB 410
Santa Rosa Beach, Florida 32459

JOB NUMBER: 23019.1

DATE: --/--/----

TITLE: STUCCO DETAILS

SHEET: A681

K:\Projects\23\23019\DWGs\Serenity_Bldg-1_Inn\Sheets\23019.1-A681.dwg Plotted: Nov 13, 2025 - 6:25pm by CalebLawrence

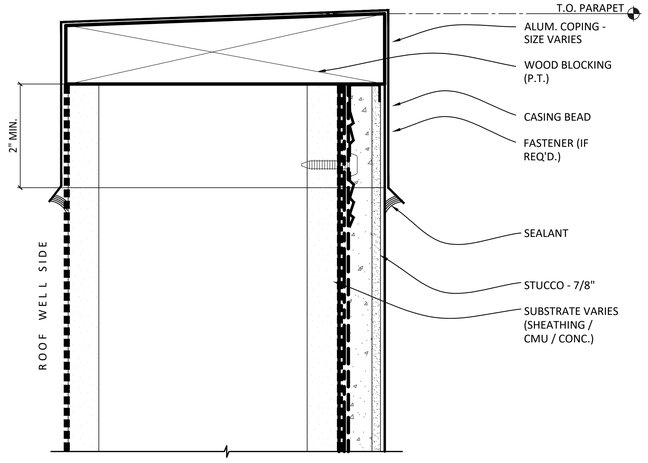

E1	SECTION @ STUCCO / PARAPET / ALUM COPING (TYP)
A682	N.T.S.

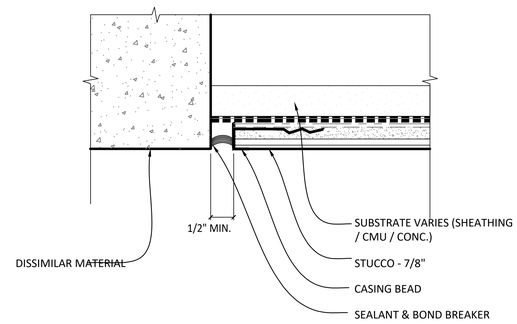

E3	PLAN DETAIL @ STUCCO / DISSIMILAR MATERIAL
A682	N.T.S.

GENERAL NOTES

A. REFER TO SPEC SECTION 09 2423 - PORTLAND CEMENT STUCCO

SHEET NOTES / LEGEND

1. -

NOTE:
A. TERMINATE STUCCO SYSTEM MIN 8" ABOVE FIN. GRADE

B. PARGE COAT (TO MATCH STUCCO COLOR) ON EXPOSED CONC. BELOW STUCCO

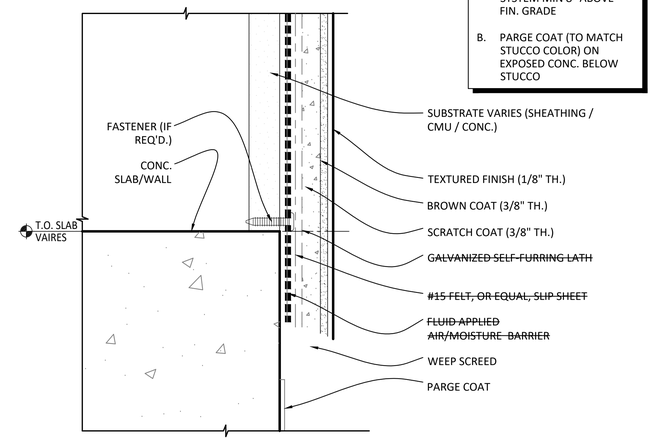

D6	SECT. @ STUCCO / TERMINATION AT FOUNDATION
A682	N.T.S.

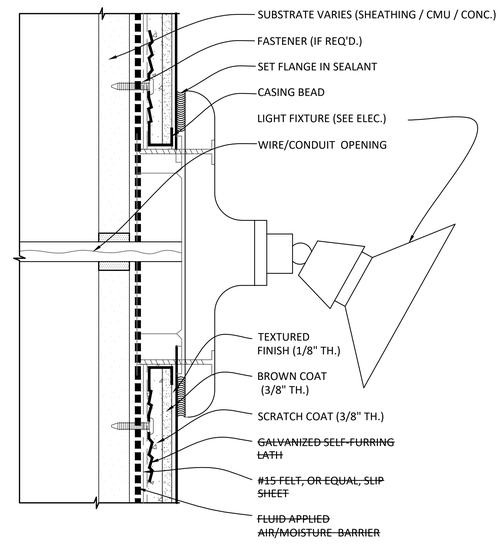

B1	SECT. @ STUCCO / WALL MTD. LIGHT FIXTURE (TYP.)
A682	N.T.S.

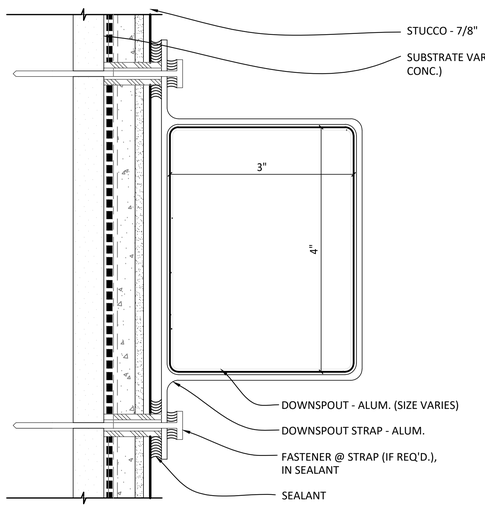

B4	PLAN DETAIL @ STUCCO / DOWNSPOUT (TYP.)
A682	N.T.S.

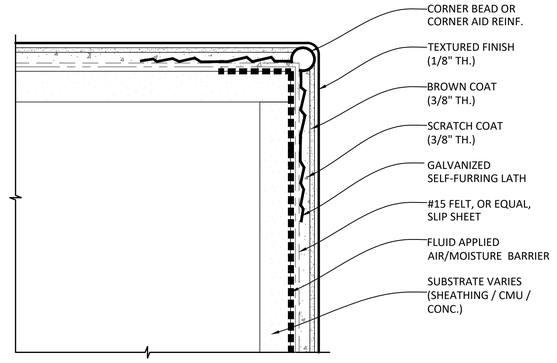

B6	PLAN DETAIL @ STUCCO / OUTSIDE CORNER (TYP.)
A682	N.T.S.

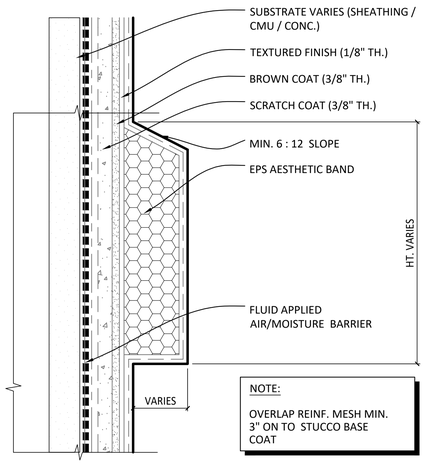

A1	SECTION @ EPS SHAPE (STUCCO)
A682	N.T.S.

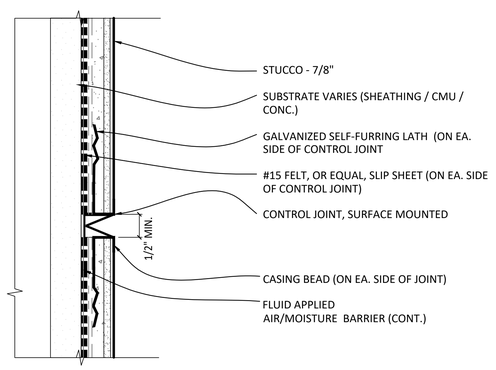

A4	PLAN DETAIL @ STUCCO / CONTROL JOINT (TYP.)
A682	N.T.S.

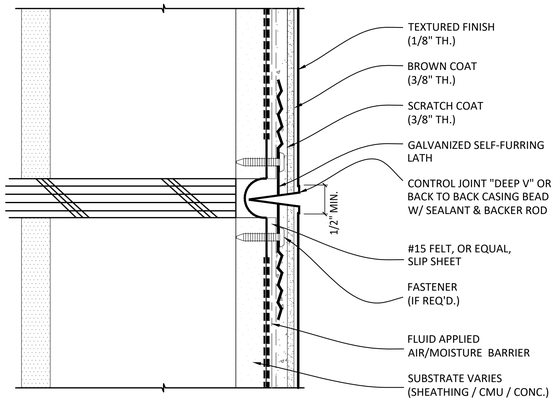

A6	STUCCO DETAIL @ HORIZ. EXP. JT.
A682	N.T.S.

KUO DIEDRICH CHI
730 PEACHTREE STREET, NE
STUDIO 325
ATLANTA, GEORGIA 30308
678.244.6270
www.KDCarchitects.com

ARCHITECT:

ARCH. REG: AR91344

CONSULTANT:

REVISIONS

DATE:	DESCRIPTION:
10/18/24	SCHEMATIC DESIGN
6/5/25	DESIGN DEVELOPMENT
10/23/25	50% CONSTRUCTION DOCS
11/14/25	PERMIT SET

PROJECT:

SERENITY SEASIDE RESORT

BUILDING #1

THE INN

186 SOUTH BAY SHORE DRIVE, EASTPOINT, FL 32328

Serenity Seaside Operations, LLC
174 Watercolor Way, PMB 410
Santa Rosa Beach, Florida 32459

JOB NUMBER: 23019.1

DATE: --/--/----

TITLE: STUCCO DETAILS

SHEET: A682

K:\Projects\23\23019\DWGs\Serenity_Bldg-1_Inn\Sheets\23019.1-A682.dwg Plotted: Nov 13, 2025 - 6:26pm by ColebLawrence

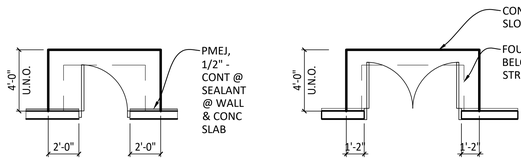

A SINGLE DOOR
-

B DOUBLE DOOR
-

F4 | PLAN DETAILS @ EXT DOORS

A691 | 1/4" = 1'-0"

GENERAL NOTES

A. -

SHEET NOTES / LEGEND

1. METAL BOLLARD, DETAIL C5/A692

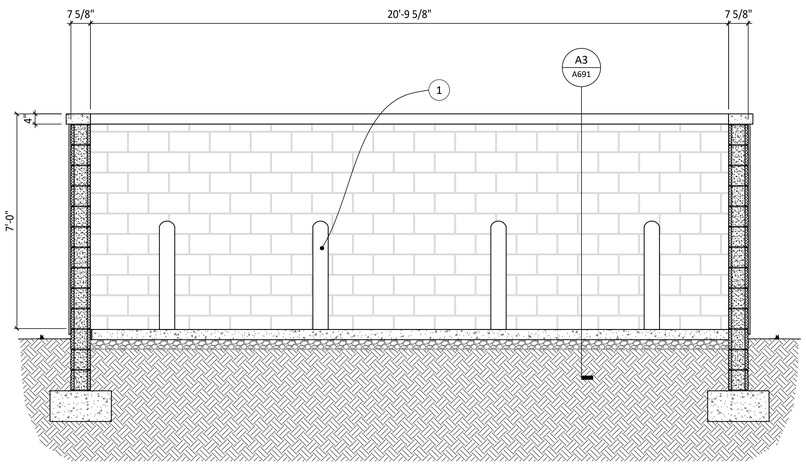

D2 | ELEV @ DUMPSTER ENCLOSURE

A691 | 1/2" = 1'-0"

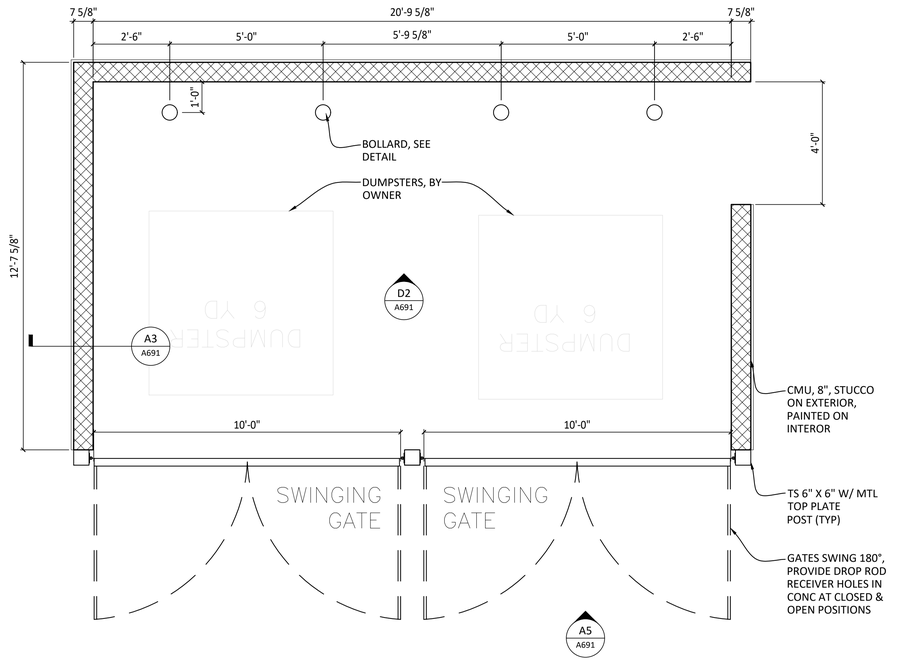

C5 | PLAN DETAIL @ DUMPSTER ENCLOSURE

A691 | 1/2" = 1'-0"

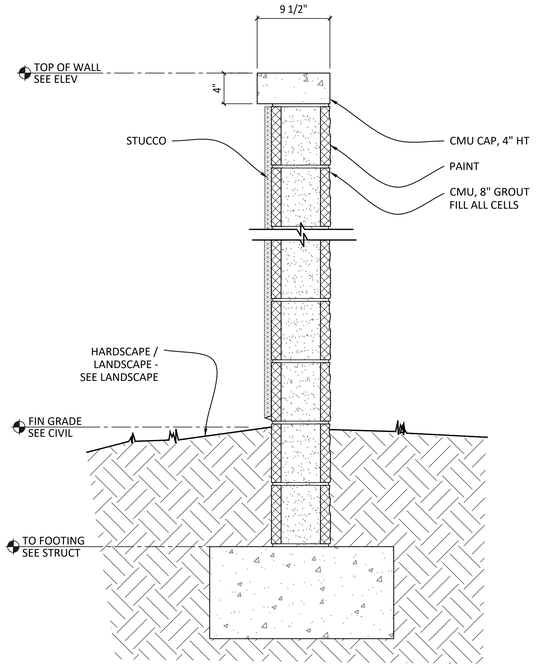

A1 | SECTION @ SITE WALL (STUCCO ON CMU)

A691 | 1-1/2" = 1'-0"

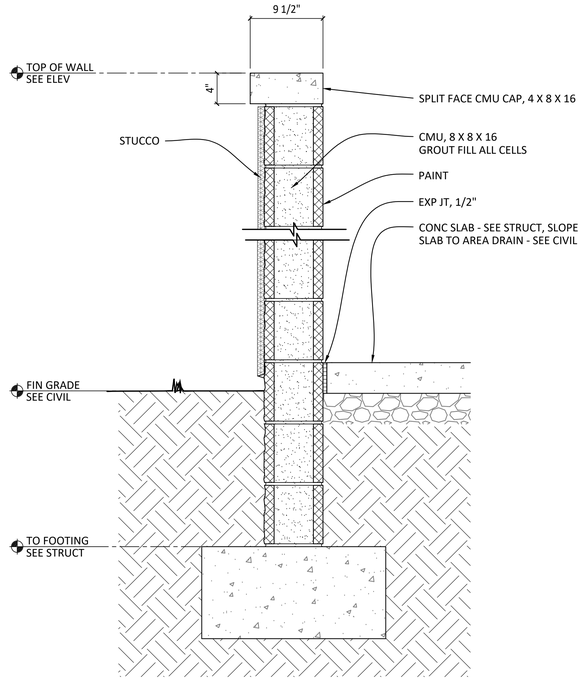

A3 | SECTION @ SITE WALL (STUCCO ON CMU)

A691 | 1-1/2" = 1'-0"

TRASH ENCLOSURE DOOR		
QTY.	DESCRIPTION	NUMBER – FINISH
4	RICHARD WILCOX: HINGE	1035.00271 24" – BLK
2	RICHARD WILCOX: CANE BOLT	0524.00021 – BLK
2	LAWRENCE BROS PULL	CD1210S – BLK
1	LAWRENCE BROS HASP	CD1915S–6"
1	PADLOCK	C955–2 FIC – 606
1	CYLINDER CORE	(HARDWARE NUMBER TO BE DETERMINED)

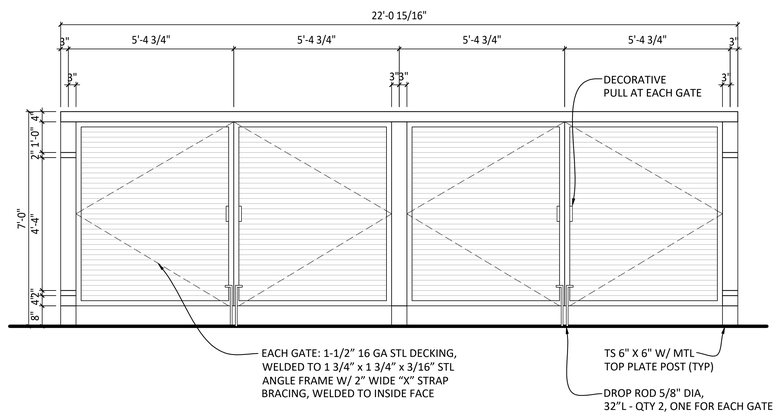

A5 | ELEVATION @ GATE / FENCE - DUMPSTER ENCLOSURE

A691 | 1/2" = 1'-0"

KUO DIEDRICH CHI
730 PEACHTREE STREET, NE
STUDIO 325
ATLANTA, GEORGIA 30308
678.244.6270
www.KDCarchitects.com

ARCHITECT:

ARCH. REG: AR91344

CONSULTANT:

REVISIONS

DATE:	DESCRIPTION:
10/18/24	SCHEMATIC DESIGN
6/5/25	DESIGN DEVELOPMENT
10/23/25	50% CONSTRUCTION DOCS
11/14/25	PERMIT SET

PROJECT:

SERENITY SEASIDE RESORT

BUILDING #1

THE INN

186 SOUTH BAY SHORE DRIVE, EASTPOINT, FL 32328

Serenity Seaside Operations, LLC
174 Watercolor Way, PMB 410
Santa Rosa Beach, Florida 32459

JOB NUMBER: 23019.1

DATE: --/--/----

TITLE: SITE DETAILS

SHEET: A691

K:\Projects\23\23019\DWGs\Serenity_Bldg-1_Inn\Sheets\23019.1-A691.dwg Plotted: Nov. 13, 2025 - 6:26pm by ColebLawrence

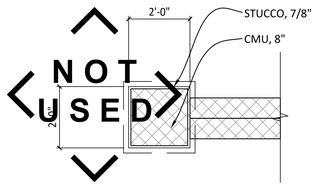

E1	PLAN DETAIL @ SIGN
A692	1/2" = 1'-0"

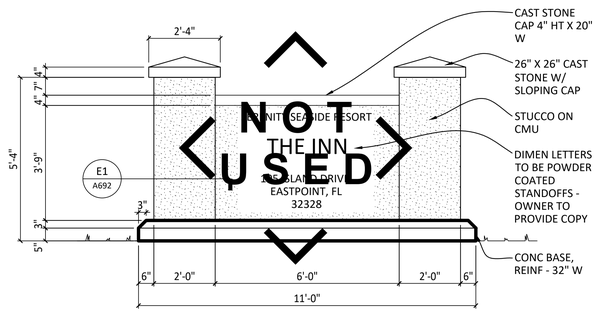

D1	ELEVATION @ MONUMENT SIGN
A692	1/2" = 1'-0"

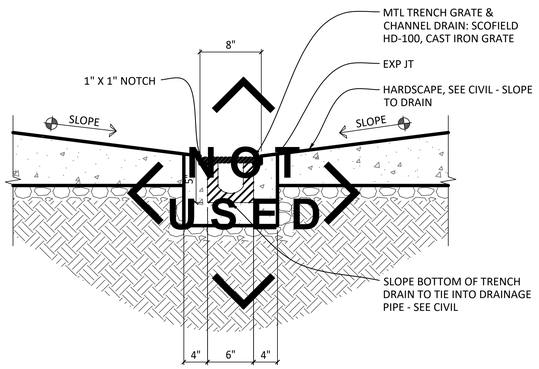

B1	SECTION @ TRENCH DRAIN (SITE)
A692	1-1/2" = 1'-0"

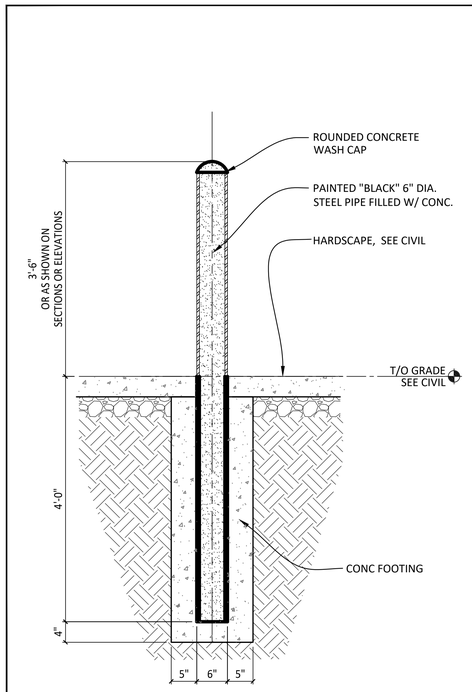

C5	SECTION @ SITE BOLLARD
A692	1" = 1'-0"

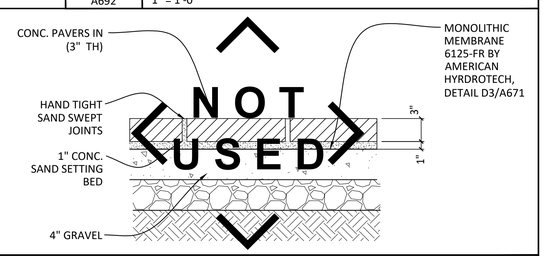

B4	SECT @ PAVERS - VEHICULAR
A692	1-1/2" = 1'-0"

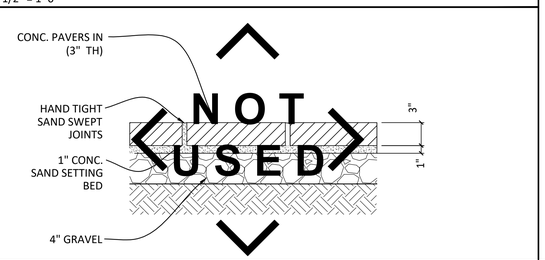

A4	SECTION @ PAVERS - PEDESTRIAN
A692	1-1/2" = 1'-0"

NOTE:

THIS DETAIL IS ONLY AT THE SHOWER AT THE POOL DECK

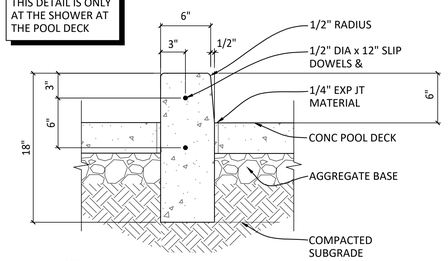

NOTES:

1. ALL EXPOSED CONC EDGES (HORIZ & VERT) SHALL HAVE 1/2" RADIUS
2. ALL EXPOSED CONC COVERED W/ CONC MICRO-TOPPING

A CONC HEADER CURB (6")

A3	CURB DETAIL @ POOL DECK
A692	1-1/2" = 1'-0"

NOTES:
A. SEE LANDSCAPE PLAN FOR JOINT LOCATIONS
B. PROVIDE @ 20'-0" O/C (TYP)
C. "T" = 4", ON 4" GRAVEL

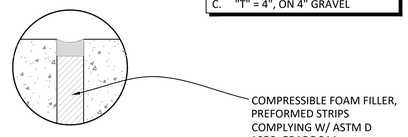

D EXPANSION JOINT
ENLARGEMENT (N.T.S.)

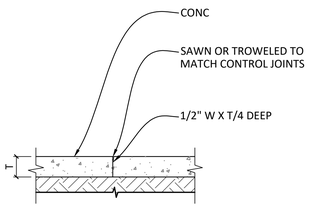

C CONSTRUCTION JOINT

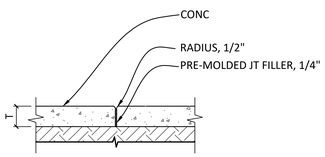

B EXPANSION JOINT

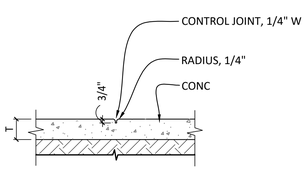

A CONTROL JOINT

A6	SECTIONS @ CONC SIDEWALK
A692	1" = 1'-0"

SHEET NOTES / LEGEND

1. -

GENERAL NOTES

A. -

KUO DIEDRICH CHI
730 PEACHTREE STREET, NE
STUDIO 325
ATLANTA, GEORGIA 30308
678.244.6270
www.KDCarchitects.com

ARCHITECT:

ARCH. REG: AR91344

CONSULTANT:

REVISIONS	
DATE:	DESCRIPTION:
10/18/24	SCHEMATIC DESIGN
6/5/25	DESIGN DEVELOPMENT
10/23/25	50% CONSTRUCTION DOCS
11/14/25	PERMIT SET

PROJECT:
SERENITY SEASIDE RESORT
BUILDING #1
THE INN
186 SOUTH BAY SHORE DRIVE, EASTPOINT, FL 32328

Serenity Seaside Operations, LLC
174 Watercolor Way, PMB 410
Santa Rosa Beach, Florida 32459

JOB NUMBER: 23019.1

DATE: --/--/----

TITLE: SITE DETAILS

SHEET: A692

K:\Projects\23\23019\DWGs\Serenity_Bldg-1_Inn\Sheets\23019.1-A692.dwg Plotted: Nov 13, 2025 - 6:26pm by CotebLawrence

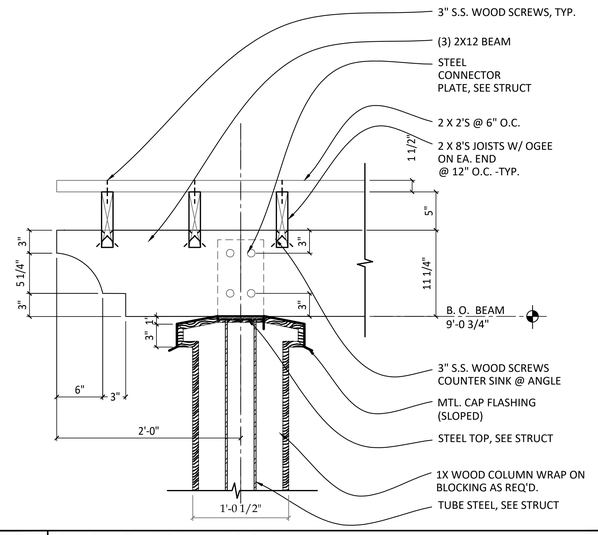

E3 SECTION @ PERGOLA

A693 | 1-1/2" = 1'-0"

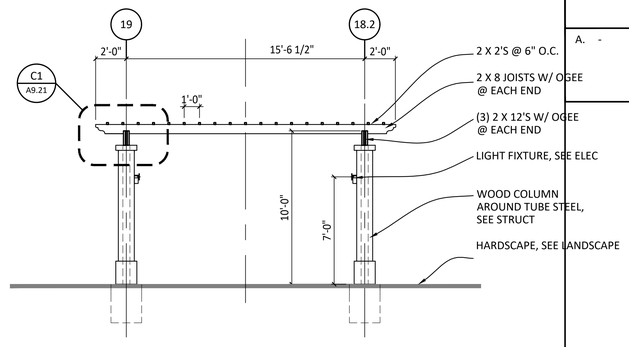

D5 SIDE ELEVATION @ PERGOLA

A693 | 1/4" = 1'-0"

SHEET NOTES / LEGEND

1. -

GENERAL NOTES

A. -

B1 ISOMETRIC DETAIL @ PERGOLA

A693 | 1-1/2" = 1'-0"

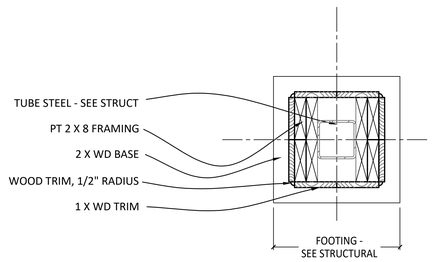

A1 PLAN DETAIL @ PERGOLA

A693 | 1-1/2" = 1'-0"

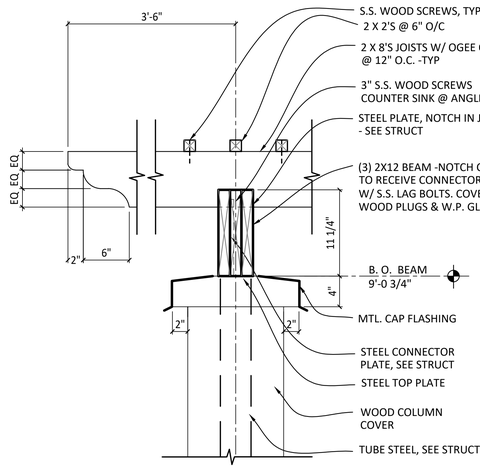

C3 SECTION @ PERGOLA

A693 | 1-1/2" = 1'-0"

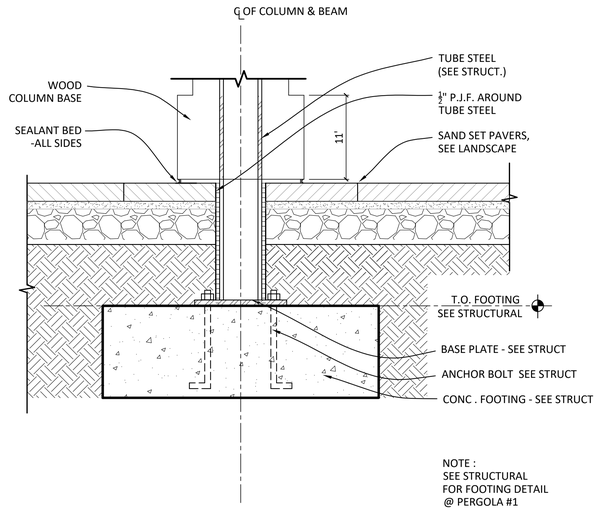

A3 SECTION @ PERGOLA

A693 | 1-1/2" = 1'-0"

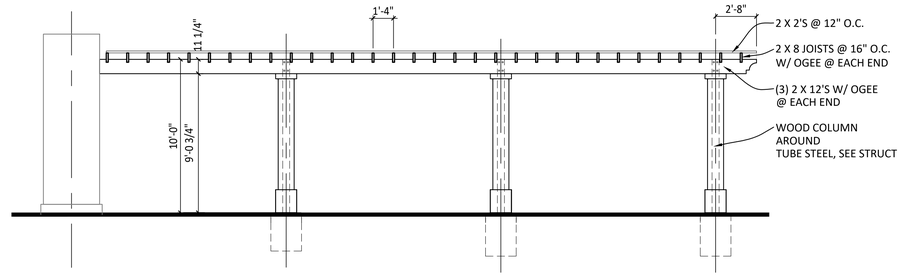

C5 FRONT ELEVATION @ PERGOLA

A693 | 1/4" = 1'-0"

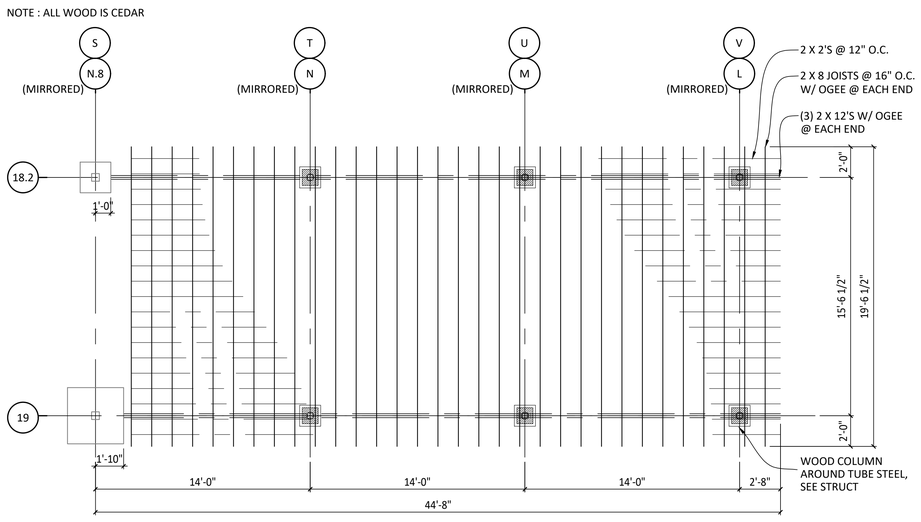

A5 PLAN DETAIL @ PERGOLA

A693 | 1/4" = 1'-0"

KUO DIEDRICH CHI
730 PEACHTREE STREET, NE
STUDIO 325
ATLANTA, GEORGIA 30308
678.244.6270
www.KDCarchitects.com

ARCHITECT:

ARCH. REG: AR91344

CONSULTANT:

REVISIONS

DATE:	DESCRIPTION:
10/18/24	SCHEMATIC DESIGN
6/5/25	DESIGN DEVELOPMENT
10/23/25	50% CONSTRUCTION DOCS
11/14/25	PERMIT SET

PROJECT:

SERENITY SEASIDE RESORT

BUILDING #1

THE INN

186 SOUTH BAY SHORE DRIVE, EASTPOINT, FL 32328

Serenity Seaside Operations, LLC
174 Watercolor Way, PMB 410
Santa Rosa Beach, Florida 32459

JOB NUMBER: 23019.1

DATE: --/--/----

TITLE: SITE DETAILS - PERGOLA

SHEET: A693

K:\Projects\23\23019\DWGs\Serenity_Bldg-1_Inn\Sheets\23019.1-A693.dwg Plotted: Nov 13, 2025 – 6:26pm by ColebLawrence

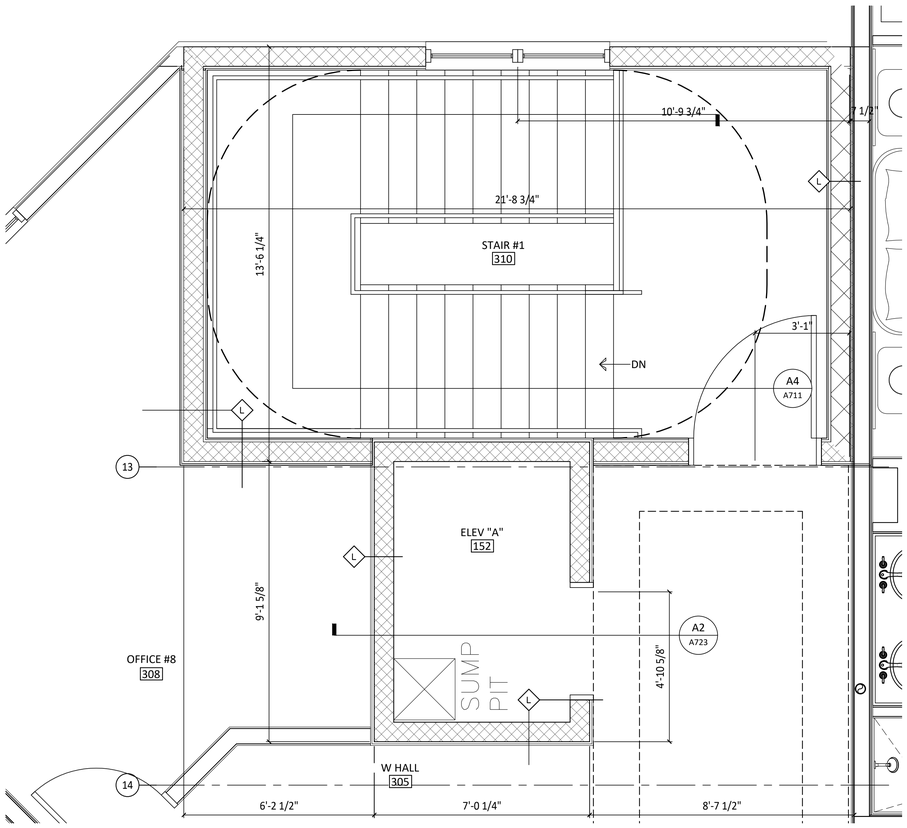

D1 DETAILED PLAN @ LEVEL 300: STAIR #1 & ELEVATOR "A"

A701 1/2" = 1'-0"

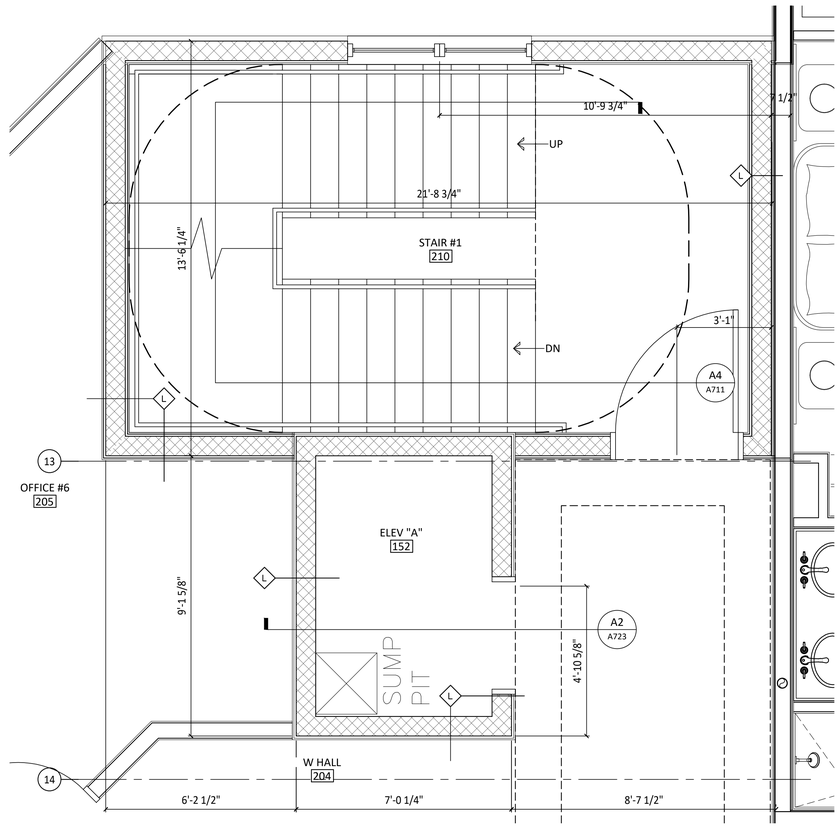

D4 DETAILED PLAN @ LEVEL 200: STAIR #1 & ELEVATOR "A"

A701 1/2" = 1'-0"

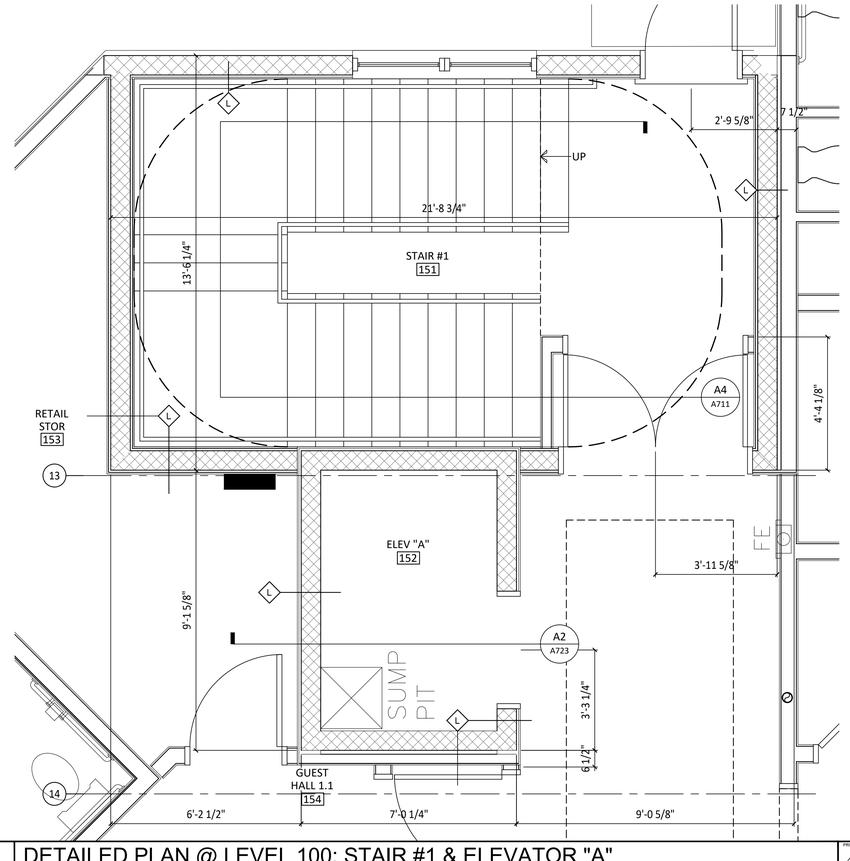

A4 DETAILED PLAN @ LEVEL 100: STAIR #1 & ELEVATOR "A"

A701 1/2" = 1'-0"

SHEET NOTES / LEGEND

1. -

GENERAL NOTES

A. -

KUO DIEDRICH CHI

730 PEACHTREE STREET, NE
STUDIO 325
ATLANTA, GEORGIA 30308
678.244.6270

www.KDCarchitects.com

ARCHITECT:

ARCH. REG: AR91344

CONSULTANT:

REVISIONS

DATE:	DESCRIPTION:
10/18/24	SCHEMATIC DESIGN
6/5/25	DESIGN DEVELOPMENT
10/23/25	50% CONSTRUCTION DOCS
11/14/25	PERMIT SET

PROJECT:

SERENITY SEASIDE RESORT

BUILDING #1

THE INN

186 SOUTH BAY SHORE DRIVE, EASTPOINT, FL 32328

Serenity Seaside Operations, LLC
174 Watercolor Way, PMB 410
Santa Rosa Beach, Florida 32459

JOB NUMBER: 23019.1

DATE: --/--/----

TITLE: STAIR #1 & ELEVATOR "A" DETAILED PLANS

SHEET: A701

K:\Projects\23\23019\DWGs\Serenity_Bldg-1_Inn\Sheets\23019.1-A701.dwg Plotted: Nov 13, 2025 - 6:26pm by ColebLawrence

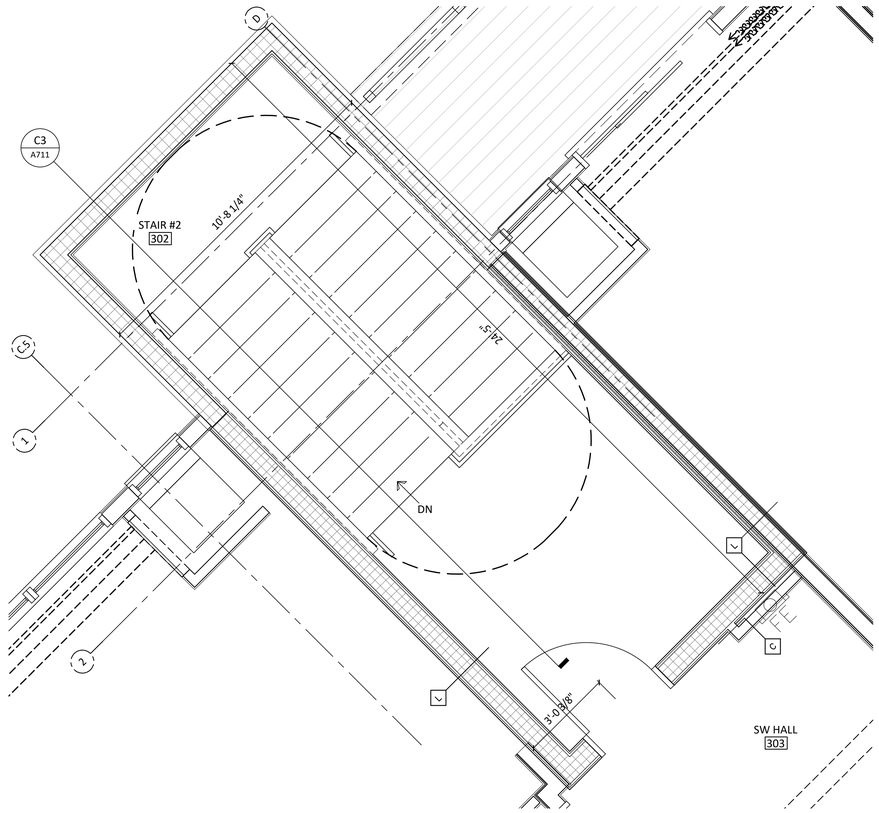

D1 DETAILED PLAN @ LEVEL 300: STAIR #2

A702 1/2" = 1'-0"

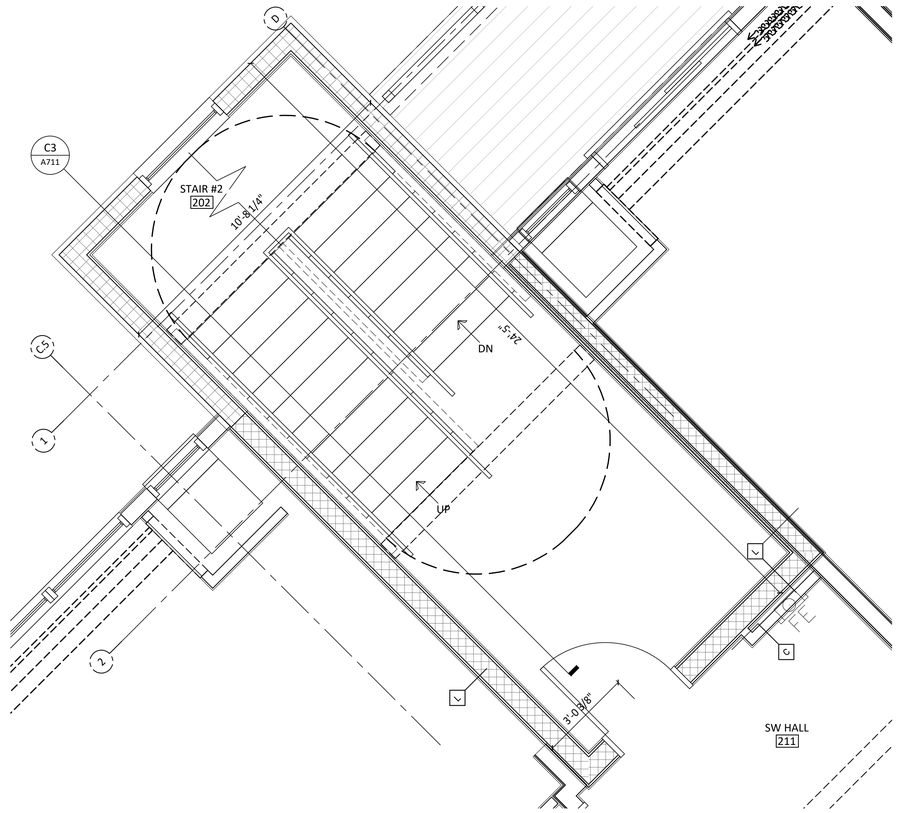

D4 DETAILED PLAN @ LEVEL 200: STAIR #2

A702 1/2" = 1'-0"

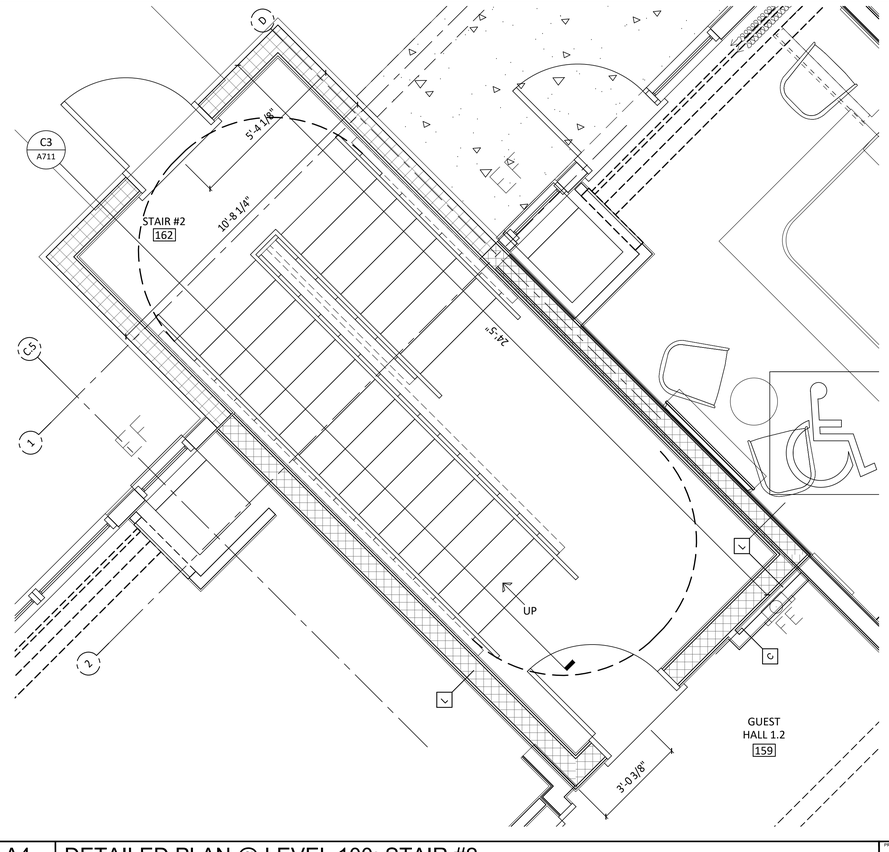

A4 DETAILED PLAN @ LEVEL 100: STAIR #2

A702 1/2" = 1'-0"

SHEET NOTES / LEGEND

1. -

GENERAL NOTES

A. -

KUO DIEDRICH CHI

730 PEACHTREE STREET, NE
STUDIO 325
ATLANTA, GEORGIA 30308
678.244.6270

www.KDCarchitects.com

ARCHITECT:

ARCH. REG: AR91344

CONSULTANT:

REVISIONS

DATE:	DESCRIPTION:
10/18/24	SCHEMATIC DESIGN
6/5/25	DESIGN DEVELOPMENT
10/23/25	50% CONSTRUCTION DOCS
11/14/25	PERMIT SET

PROJECT:

SERENITY SEASIDE RESORT

BUILDING #1

THE INN

186 SOUTH BAY SHORE DRIVE, EASTPOINT, FL 32328

Serenity Seaside Operations, LLC
174 Watercolor Way, PMB 410
Santa Rosa Beach, Florida 32459

JOB NUMBER: 23019.1

DATE: --/--/----

TITLE: STAIR #2 DETAILED PLANS

SHEET: A702

K:\Projects\23\23019\DWGs\Serenity_Bldg-1_Inn\Sheets\23019.1-A702.dwg Plotted: Nov 13, 2025 - 6:27pm by CalebLawrence

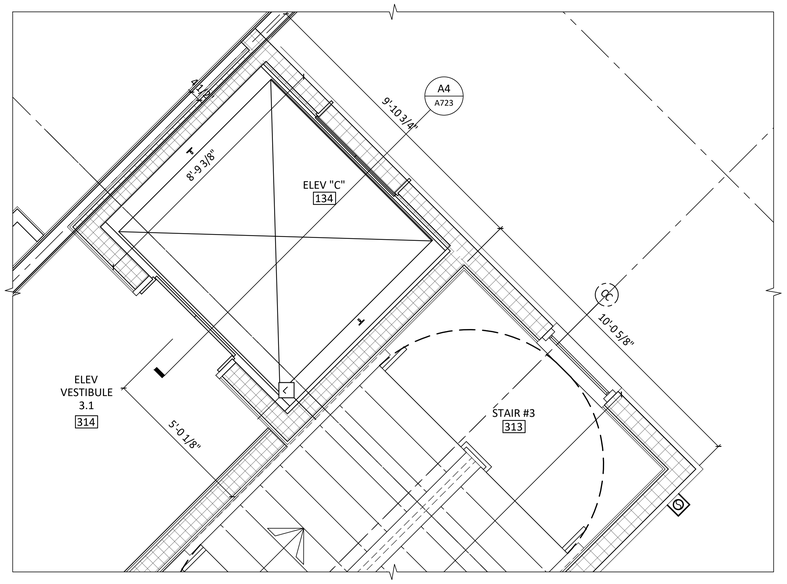

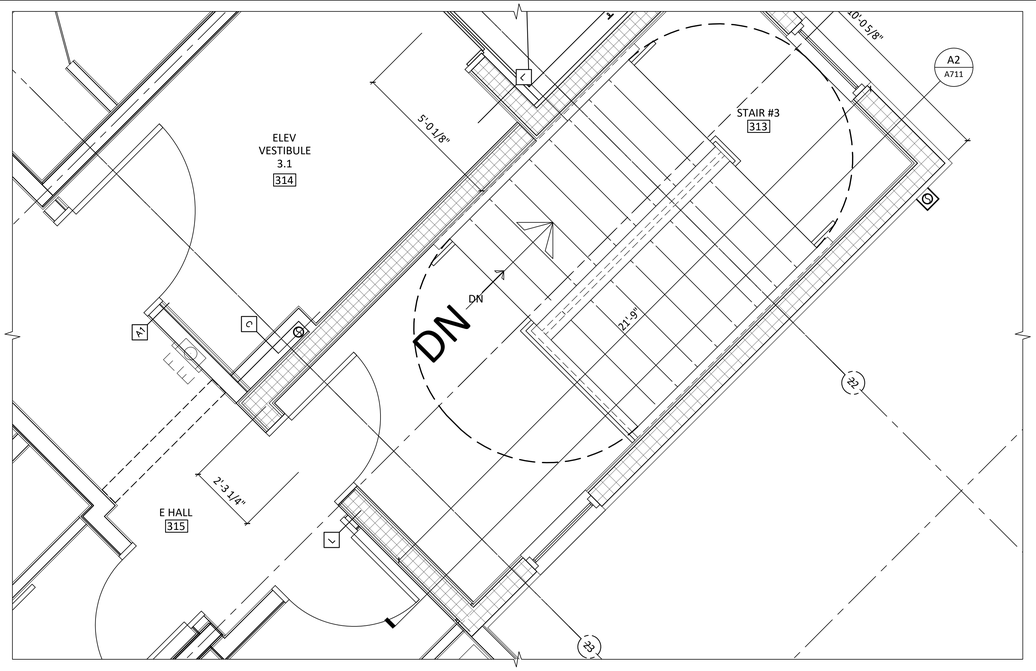

D1 DETAILED PLAN @ LEVEL 300: STAIR #3 & ELEVATOR "C"

A703 | 1/2" = 1'-0"

PROJECT NORTH

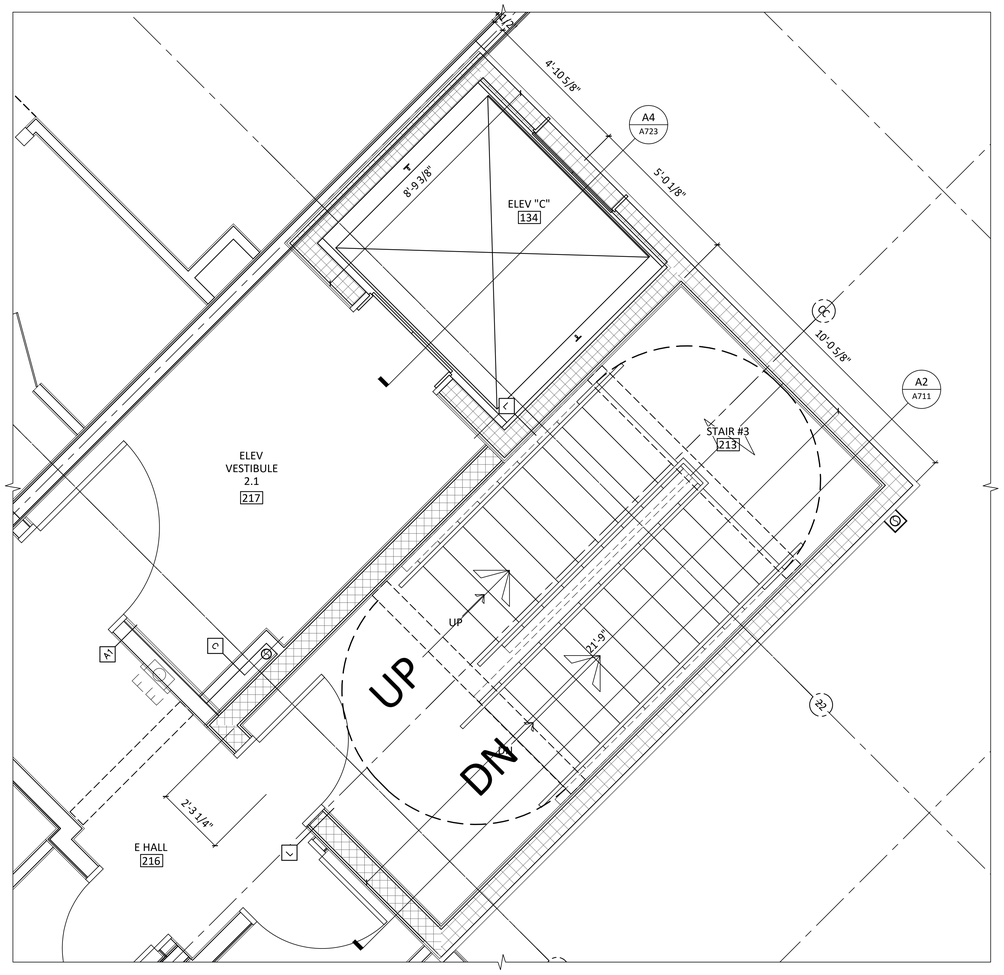

A1 DETAILED PLAN @ LEVEL 200: STAIR #3 & ELEVATOR "C"

A703 | 1/2" = 1'-0"

PROJECT NORTH

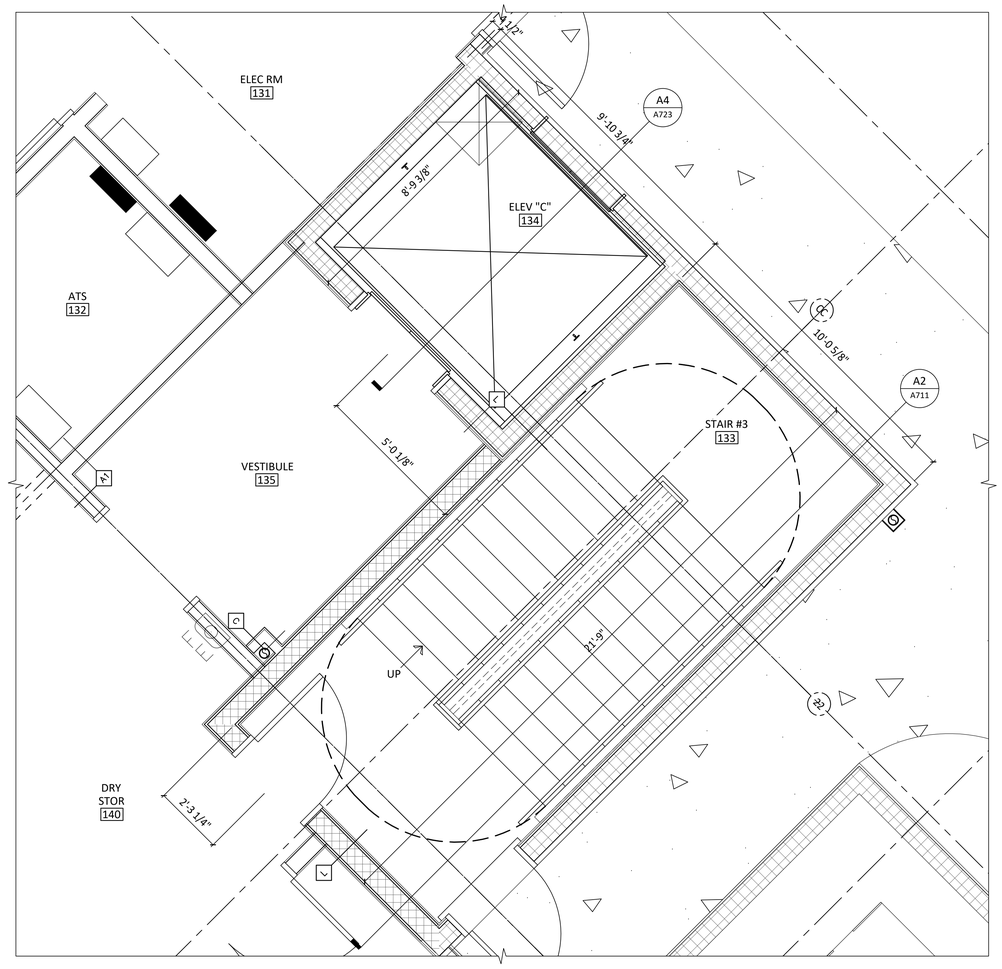

A4 DETAILED PLAN @ LEVEL 100: STAIR #3 & ELEVATOR "C"

A703 | 1/2" = 1'-0"

PROJECT NORTH

SHEET NOTES / LEGEND

1. -

GENERAL NOTES

A. -

KUO DIEDRICH CHI

730 PEACHTREE STREET, NE
STUDIO 325
ATLANTA, GEORGIA 30308
678.244.6270

www.KDCarchitects.com

ARCHITECT:

ARCH. REG: AR91344

CONSULTANT:

REVISIONS

DATE:	DESCRIPTION:
10/18/24	SCHEMATIC DESIGN
6/5/25	DESIGN DEVELOPMENT
10/23/25	50% CONSTRUCTION DOCS
11/14/25	PERMIT SET

PROJECT:

SERENITY SEASIDE RESORT

BUILDING #1

THE INN

186 SOUTH BAY SHORE DRIVE, EASTPOINT, FL 32328

Serenity Seaside Operations, LLC
174 Watercolor Way, PMB 410
Santa Rosa Beach, Florida 32459

JOB NUMBER: 23019.1

DATE: --/--/----

TITLE: STAIR #3 & ELEVATOR "C" DETAILED PLANS

SHEET: A703

K:\Projects\23\23019\DWGs\Serenity_Bldg-1_Inn\Sheets\23019.1-A703.dwg Plotted: Nov 13, 2025 - 6:27pm by Colebluwrence

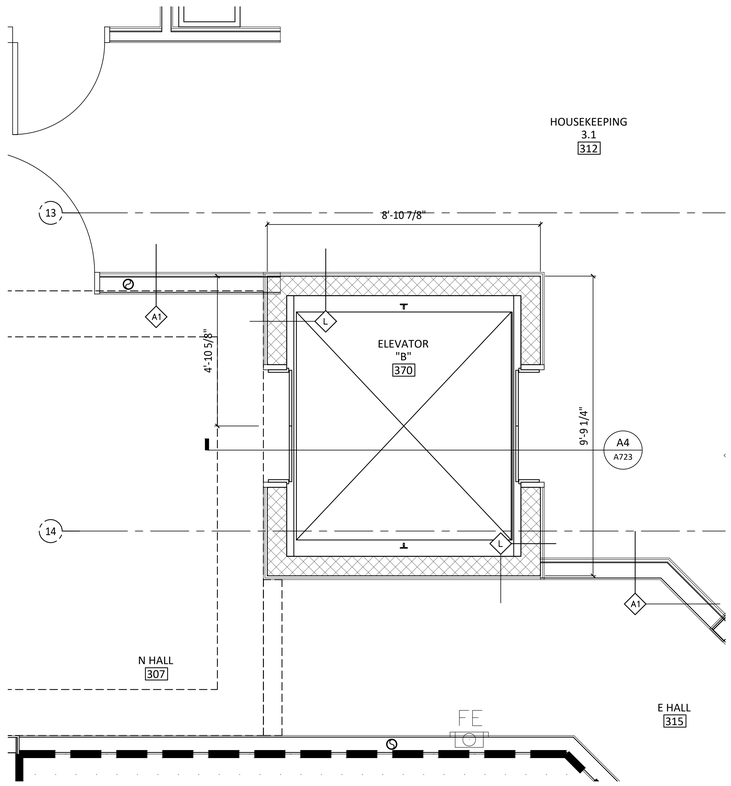

D1 DETAILED PLAN @ LEVEL 300: ELEVATOR "B"

A704 1/2" = 1'-0"

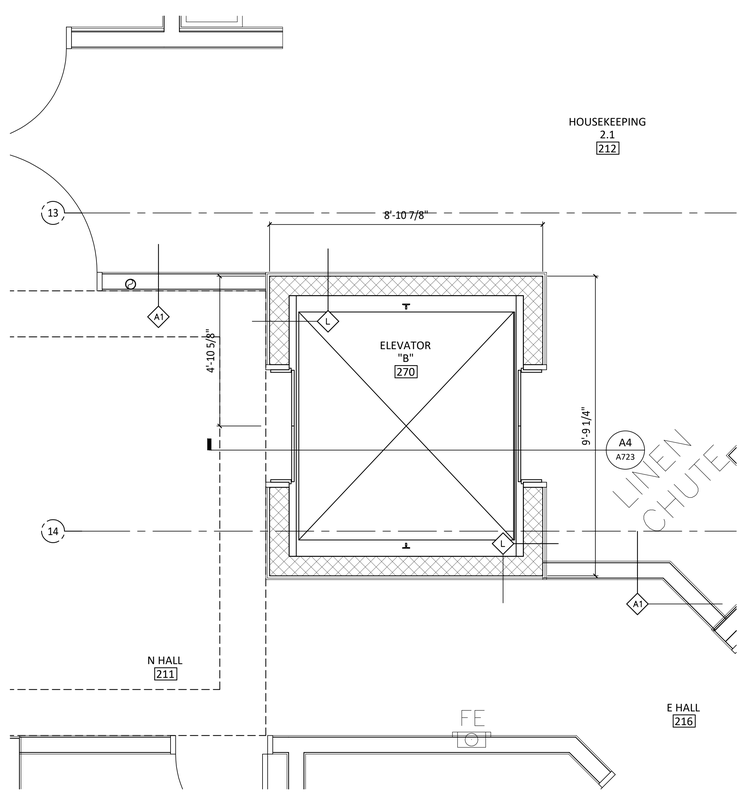

D4 DETAILED PLAN @ LEVEL 200: ELEVATOR "B"

A704 1/2" = 1'-0"

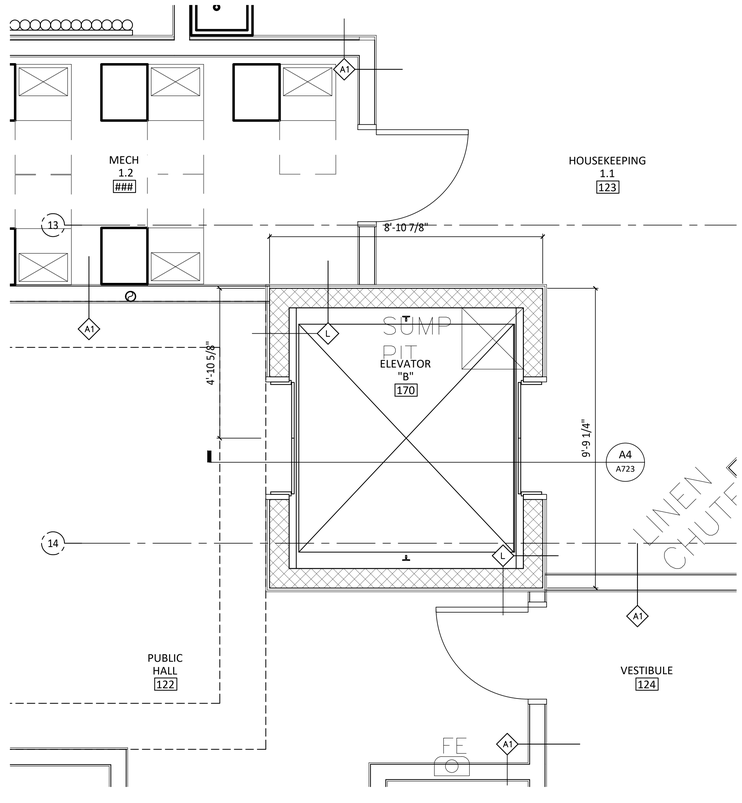

A4 DETAILED PLAN @ LEVEL 100: ELEVATOR "B"

A704 1/2" = 1'-0"

SHEET NOTES / LEGEND

1. -

GENERAL NOTES

A. -

KUO DIEDRICH CHI

730 PEACHTREE STREET, NE
STUDIO 325
ATLANTA, GEORGIA 30308
678.244.6270

www.KDCarchitects.com

ARCHITECT:

ARCH. REG: AR91344

CONSULTANT:

REVISIONS

DATE:	DESCRIPTION:
10/18/24	SCHEMATIC DESIGN
6/5/25	DESIGN DEVELOPMENT
10/23/25	50% CONSTRUCTION DOCS
11/14/25	PERMIT SET

PROJECT:

SERENITY SEASIDE RESORT

BUILDING #1

THE INN

186 SOUTH BAY SHORE DRIVE, EASTPOINT, FL 32328

Serenity Seaside Operations, LLC
174 Watercolor Way, PMB 410
Santa Rosa Beach, Florida 32459

JOB NUMBER: 23019.1

DATE: --/--/----

TITLE: ELEVATOR "B" DETAILED PLANS

SHEET: A704

K:\Projects\23\23019\DWGs\Serenity_Bldg-1_Inn\Sheets\23019.1-A704.dwg Plotted: Nov 13, 2025 - 6:28pm by CalebLawrence

NOTE :
DECORATIVE PICKET:
MANUF: LJ SMITH STAIR CO
1/2" Hollow Iron Baluster
SKU: LIH-HOL166744-LSB
Series: 166744
Construction: Hollow
Square Size: 1/2-in
Length: 44-in
Finish: Low Sheen Black
Collection: Contempo
Use Location: Interior Use Only

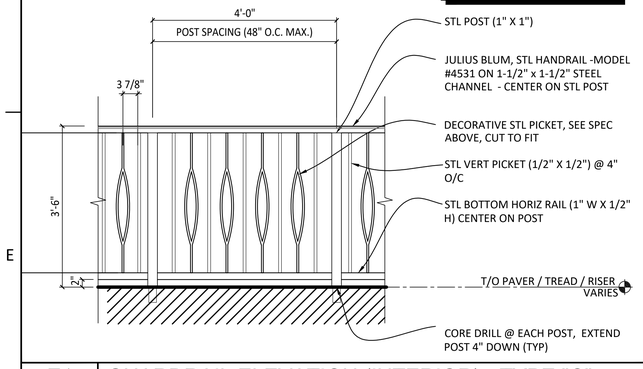

E1	GUARDRAIL ELEVATION (INTERIOR) - TYPE "C"
A711	3/4" = 1'-0"

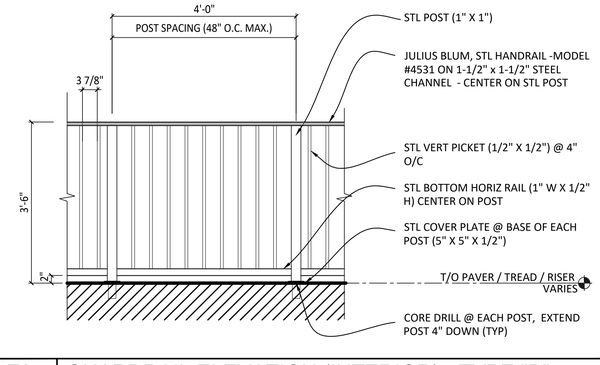

E3	GUARDRAIL ELEVATION (INTERIOR) - TYPE "B"
A711	3/4" = 1'-0"

NOTE :
TW = TREAD WIDTH

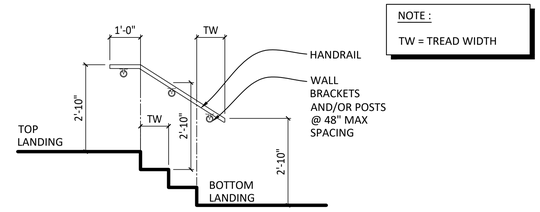

E5	ELEVATION @ STAIR HANDRAIL - WALL MTD
A711	1/2 = 1'-0"

SHEET NOTES / LEGEND

1. -

GENERAL NOTES

A. -

EXTERIOR HANDRAIL NOTES:

1. ALL METAL HANDRAIL COMPONENTS AS MANUF. BY JULIUS BLUM & CO., INC.
2. HANDRAILS : MODEL # 4429 (STEEL)
3. CHANNEL : MODEL #100CC (MALLEABLE IRON)
4. SQUARE END PIECE : MODEL #4429N (MALLEABLE IRON) @ EACH END OF HANDRAIL
5. METAL BASE : MODEL #367 (CAST IRON) SQUARE HOLE
6. METAL WALL BRACKET "D": MODEL #305 (MALLEABLE IRON)
7. METAL WALL BRACKET "C": MODEL # (MALLEABLE IRON)
8. ALL METAL HANDRAILS, CHANNELS, BRACKETS, & POSTS ARE (PAINTED)
9. PROVIDE HANDRAIL BRACKETS/POSTS @ 48" O.C. MAX.

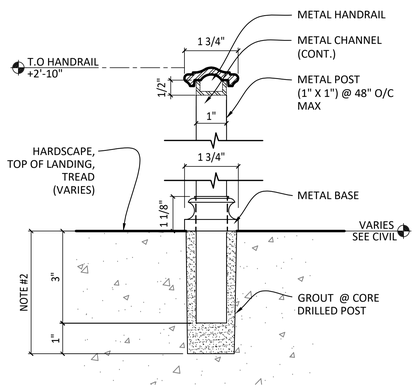

C1	HANDRAIL DETAIL @ STAIR #1
A711	6" = 1'-0"

NOTE:

SITE STAIR HANDRAILS ARE BRACKET MTD TO GUARDRAIL POSTS

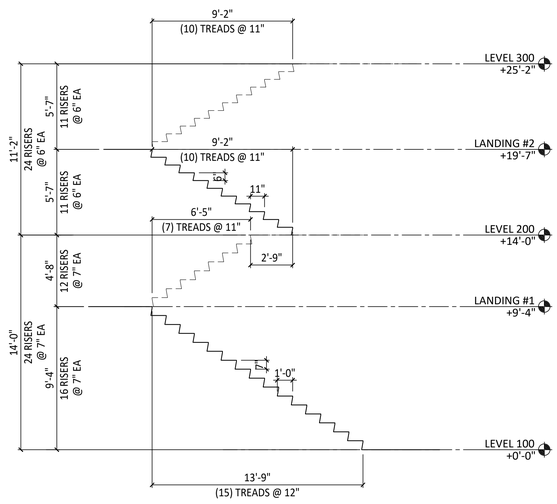

C3	SCHEMATIC SECTION @ STAIR #2 (WING A)
A711	1/4" = 1'-0"

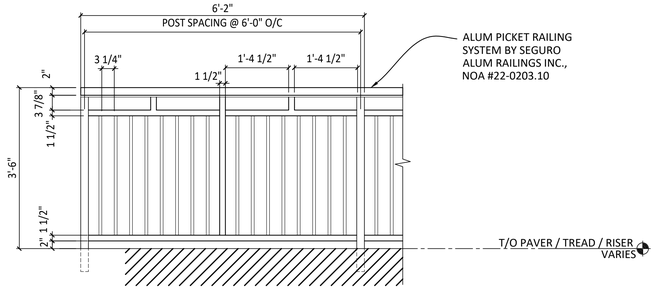

D5	GUARDRAIL ELEVATION (EXTERIOR) - TYPE "A" - STAIR #1
A711	3/4" = 1'-0"

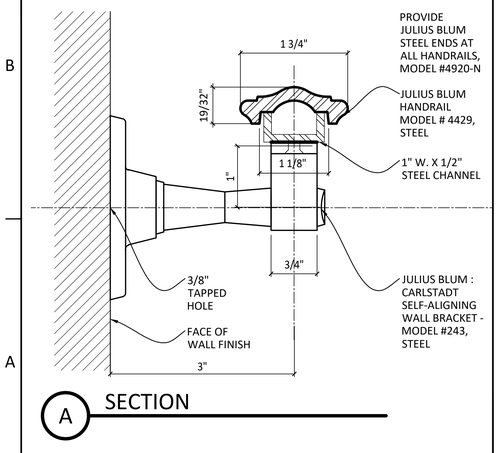

A SECTION

A1	STAIR #1 HANDRAIL DTL
A711	FULL

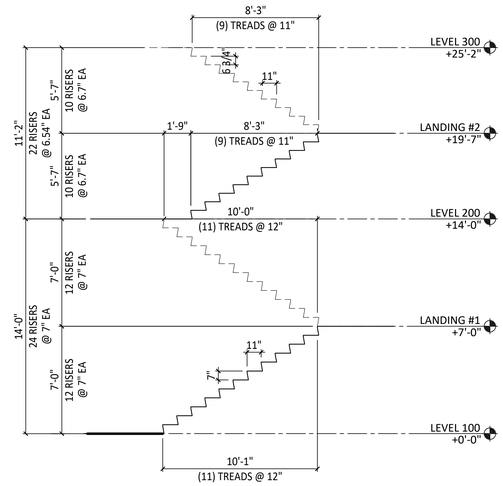

A2	SCHEMATIC SECTION @ STAIR #3 (WING C)
A711	1/4" = 1'-0"

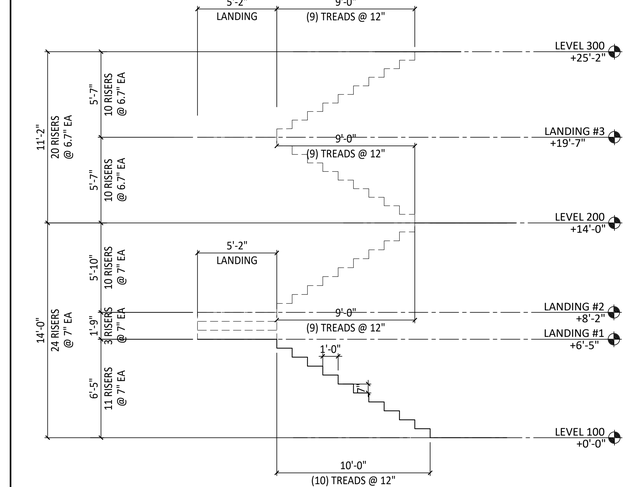

A4	SCHEMATIC SECTION @ STAIR #1 (WING B)
A711	1/4" = 1'-0"

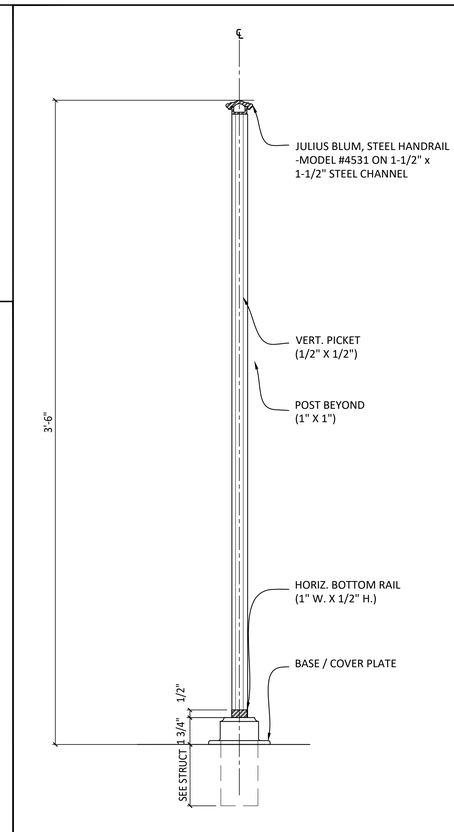

A6	SECT @ GUARDRAIL - TYPE "B" & "C"
A711	3" = 1'-0"

KUO DIEDRICH CHI
730 PEACHTREE STREET, NE
STUDIO 325
ATLANTA, GEORGIA 30308
678.244.6270
www.KDCarchitects.com

ARCHITECT:

ARCH. REG: AR91344

CONSULTANT:

REVISIONS

DATE:	DESCRIPTION:
10/18/24	SCHEMATIC DESIGN
6/5/25	DESIGN DEVELOPMENT
10/23/25	50% CONSTRUCTION DOCS
11/14/25	PERMIT SET

PROJECT:

SERENITY SEASIDE RESORT

BUILDING #1

THE INN

186 SOUTH BAY SHORE DRIVE, EASTPOINT, FL 32328

Serenity Seaside Operations, LLC
174 Watercolor Way, PMB 410
Santa Rosa Beach, Florida 32459

JOB NUMBER: 23019.1

DATE: --/--/----

TITLE: GUARDRAIL DETAILS

SHEET: A711

K:\Projects\23\23019\DWGs\Serenity_Bldg-1_mn\Sheets\23019.1-A711.dwg Plotted: Nov. 13, 2025 - 6:28pm by ColebLawrence

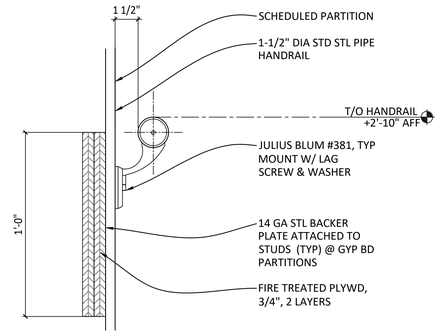

E1	HANDRAIL SECTION @ PARTITION
A712	3" = 1'-0"

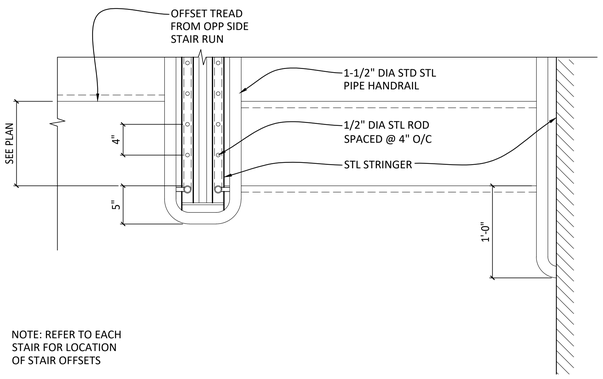

E3	PLAN @ STAIR LANDING (W/ OFFSET)
A712	1-1/2" = 1'-0"

GENERAL NOTES

A. ALL OF THESE DETAILS ARE FOR STAIRS #2 & #3

SHEET NOTES / LEGEND

1. -

STAIR RAILING DESIGN REQUIREMENTS:

1607.7.1 Handrails and Guards
Handrails and guards shall be designed to resist a load of 50 pounds per linear foot (plf) (0.73 kN/m) applied in any direction at the top and to transfer this load through the supports to the structure. Glass handrail assemblies and guards shall also comply with Section 2407.

1607.7.1.1 Concentrated Load
Handrails and guards shall be able to resist a single concentrated load of 200 pounds (0.89 kN), applied in any direction at any point along the top, and to transfer this load through the supports to the structure. This load need not be assumed to act concurrently with the loads specified in Section 1607.7.1.

1607.7.1.2 Components
Intermediate rails (all those except the handrail), balusters and panel fillers shall be designed to withstand a horizontally applied normal load of 50 pounds (0.22 kN) on an area equal to 1 square foot (0.0929 m2), including openings and space between rails. Reactions due to this loading are not required to be superimposed with those of Section 1607.7.1 or 1607.7.1.1.

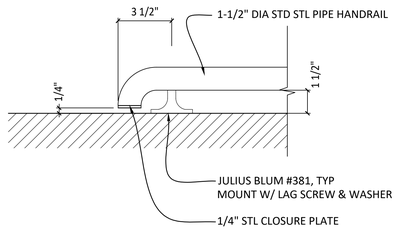

D1	HANDRAIL PLAN @ PARTITION
A712	3" = 1'-0"

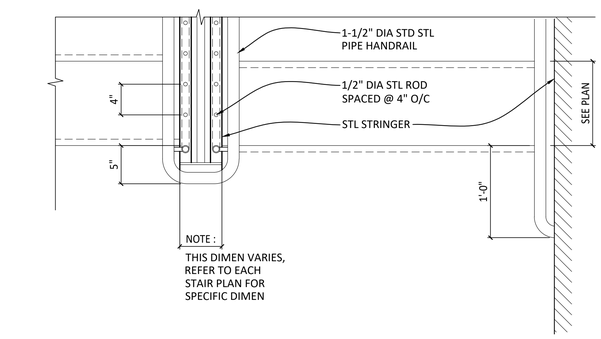

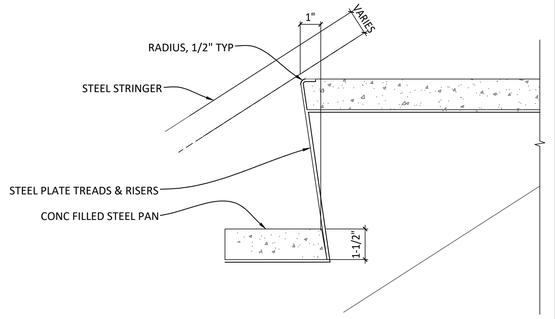

D5	SECTION @ BACK STAIR TREAD & RISER
A712	N.T.S.

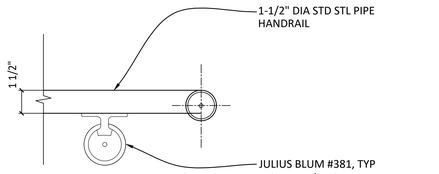

C1	HANDRAIL ELEVATION @ PARTITION
A712	3" = 1'-0"

D3	PLAN @ STAIR LANDING
A712	1-1/2" = 1'-0"

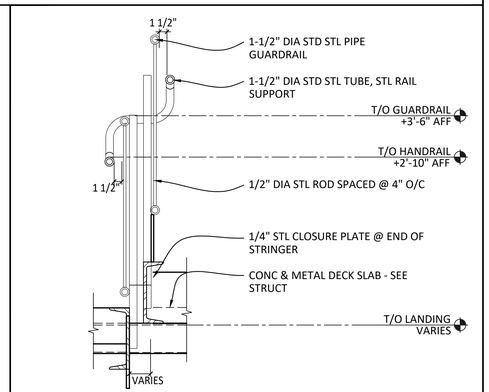

B3	GUARDRAIL ELEVATION @ LANDING
A712	1" = 1'-0"

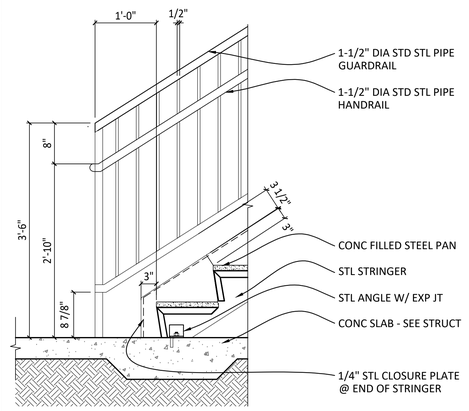

B5	SECTION @ BASE LANDING
A712	1" = 1'-0"

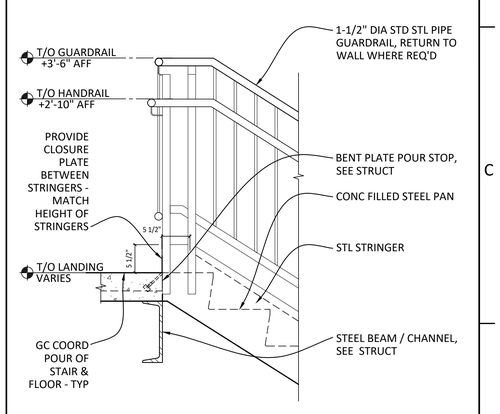

B6	SECTION @ TOP OF LANDING
A712	1" = 1'-0"

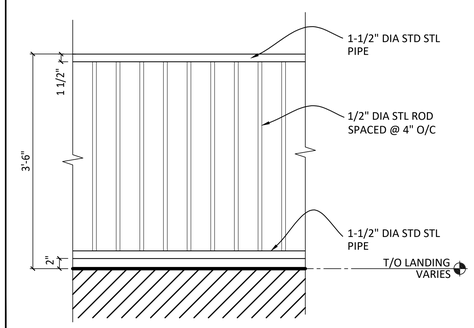

A2	GUARDRAIL ELEV (INT): TYPE "C"
A712	1" = 1'-0"

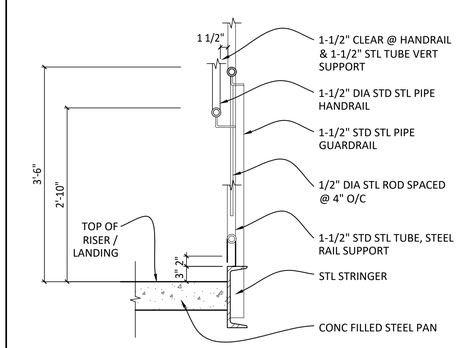

A3	STAIR SECTION @ STRINGER
A712	1" = 1'-0"

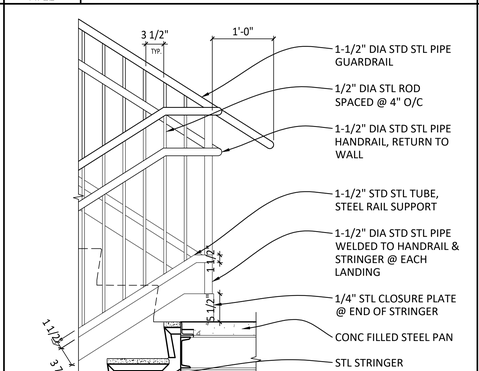

A5	STAIR SECTION - TYP
A712	1" = 1'-0"

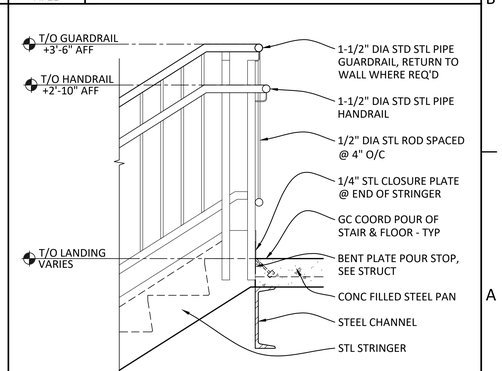

A6	SECTION @ TOP OF STAIR
A712	1" = 1'-0"

KUO DIEDRICH CHI
730 PEACHTREE STREET, NE
STUDIO 325
ATLANTA, GEORGIA 30308
678.244.6270
www.KDCarchitects.com

ARCHITECT:

ARCH. REG: AR91344

CONSULTANT:

REVISIONS

DATE:	DESCRIPTION:
10/18/24	SCHEMATIC DESIGN
6/5/25	DESIGN DEVELOPMENT
10/23/25	50% CONSTRUCTION DOCS
11/14/25	PERMIT SET

PROJECT:
SERENITY SEASIDE RESORT

BUILDING #1

THE INN

186 SOUTH BAY SHORE DRIVE, EASTPOINT, FL 32328

Serenity Seaside Operations, LLC
174 Watercolor Way, PMB 410
Santa Rosa Beach, Florida 32459

JOB NUMBER: 23019.1

DATE: --/--/----

TITLE:
STAIR SECTIONS & DETAILS

SHEET:
A712

K:\Projects\23\23019\DWGs\Serenity_Bldg-1_Inn\Sheets\23019.1-A712.dwg Plotted: Nov 13, 2025 - 6:28pm by ColebLawrence

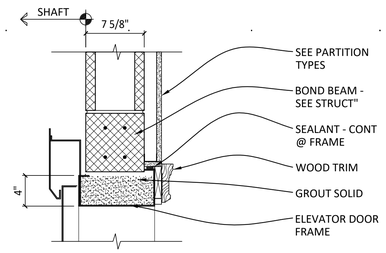

F1 HEAD DETAIL @ ELEVATOR DOOR

A721 | 1-1/2" = 1'-0"

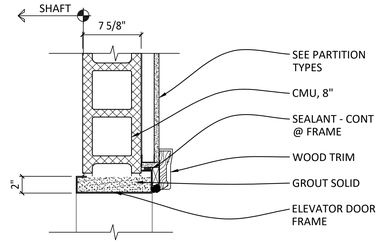

D1 JAMB DETAIL @ ELEVATOR DOOR

A721 | 1-1/2" = 1'-0"

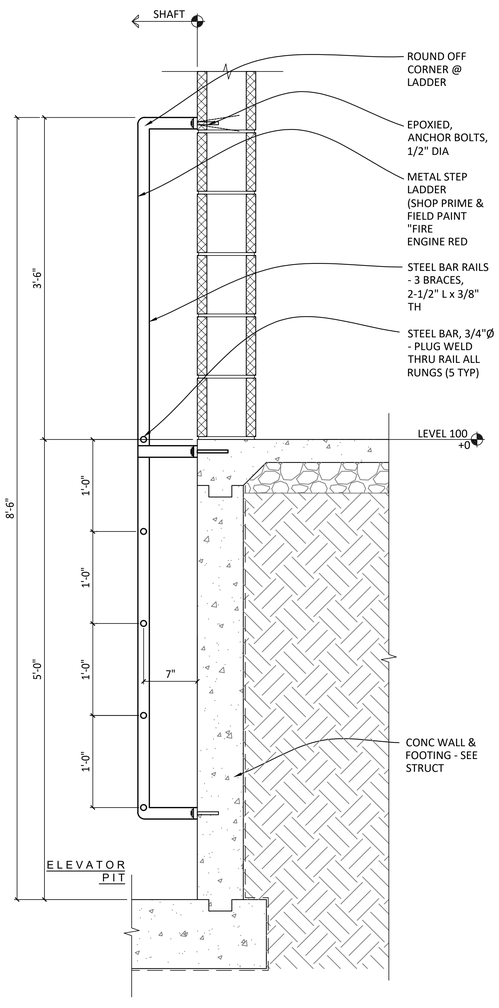

A1 SECTION @ ELEVATOR LADDER / PIT

A721 | 1-1/2" = 1'-0"

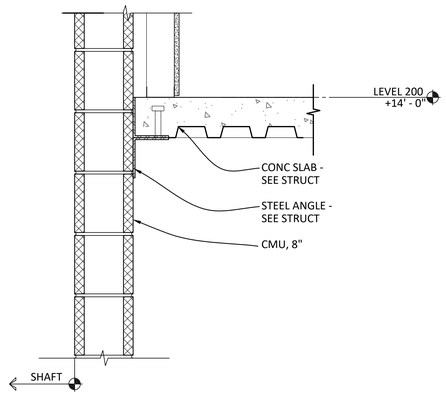

E3 SECTION @ ELEVATOR SHAFT

A721 | 1-1/2" = 1'-0"

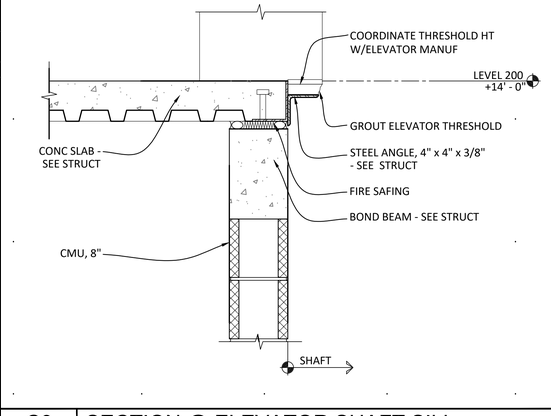

C3 SECTION @ ELEVATOR SHAFT SILL

A721 | 1-1/2" = 1'-0"

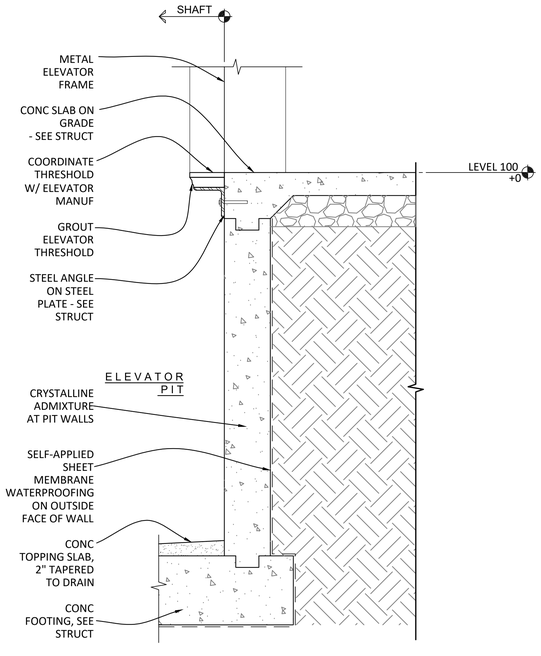

A3 SECTION @ ELEVATOR PIT

A721 | 1-1/2" = 1'-0"

NOTE:
SCHINDLER CAN ACCOMMODATE 8'-4" WIDE HOIST WAYS WITH ZERO NEGATIVE TOLERANCE. GC TO VERIFY W/ SCHINDLER REPRESENTATIVE FOR MORE DETAIL

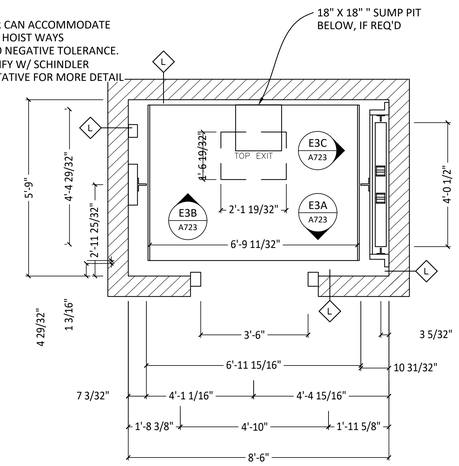

E5 PLAN @ ELEVATOR "A" (2,500 LBS) HOISTWAY

A721 | 1/2" = 1'-0"

SPECIFICATIONS: ELEVATOR #1	
PRODUCT NAME	: Schindler 3100 MRL Traction
SEISMIC ZONE	: NON-SEISMIC
CAPACITY	: 2500 lb
SPEED	: 150 FPM
DOOR	: CENTER OPENING
TRAVEL	: 26'-0"
CONTROL LOCATION	: INTEGRATED
POWER SUPPLY	: 460 V

BP = Breaker panel
8-7/8"Wx12-9/16"H
[226Wx319H]

CB = Circuit breaker
8-5/8"Wx18-3/16"H
[219Wx461H]

DR = Drive
10-1/8"x22-5/16"
[257x567]

A5 PLAN @ ELEVATOR "A" (2,500 LBS) HOISTWAY

A721 | 1/2" = 1'-0"

SHEET NOTES / LEGEND

1. -

GENERAL NOTES

A. -

1. Clear, plumb, hoistway with variations not to exceed +25mm (+1"). Hoistway enclosure to be fire rated per national code requirements and applicable building codes (rule 2.1.1).

2. Power for construction adjacent to hoistways and machine/control rooms (110/220 volt, single phase, for welders and hoists) and sufficient 3-phase power to run elevator(s) at the same time.

3. 75° bevel guards on all projections, recesses or setbacks over 100mm (4").

4. Provide venting of the hoistway per national code requirements and applicable building codes (rule 2.1.4).

5. Clear, flat, vertical or horizontal surfaces for mounting rail brackets at each floor, in overhead, and intermediate levels (if required).

6. For masonry block hoistway construction, Schindler will provide rail bracket inserts for installation by others.

7. For non-masonry hoistway construction with floor heights exceeding 4.5m (15ft), structural support at 2.4m (8ft) to 4.5m (15ft) above finished floor level for entrance strut angle attachment.

8. Grouting around entrance frames and finished floor and grout to sill line after installation of entrance

9. Construction barricades (per OSHA requirements) either outside of elevator hoistway(s) or between elevators inside of hoistway(s) as required.

10. Dry pit reinforced to sustain vertical forces from rails and impact loads on buffers (rule 2.2.2). Car buffer impact loads as calculated (rule 8.2.3).

11. Adequate sealing and waterproofing of pit. Effective prevention of pit exposure to storm water or ground water.

12. Sump pit, if required, to be located in rear center of pit floor.

13. GFCI convenience outlet and light fixture with guard in pit (National Electrical Code).

14. Pit ladder for each elevator in compliance with rule 2.2.4.2.

15. GFCI convenience outlet and telephone outlet located in machine/control room.

16. Provide, preferably at the top landing, a lockable, fused disconnect switch or circuit breaker suitable for 3-phase power for the elevator control and a separate lockable, fused disconnect switch for car lighting circuit for each elevator.

17. Building corridors shall be lighted so that the illumination level at the landing sills, when an elevator is in service, shall not be less than 100 LUX (10 FC). (RuleE 2.11.10.2)

18. For areas in seismic zone 2 or greater, provide additional 2" (50 mm) TO hoistway width.

19. Hoist beam(s) required. Contact local Schindler office for sizing and location.

20. Provide suitable feeder and branch wiring circuits from the building service to the controller, including main line switch, for signal systems, power operated doors, car lighting and convenience outlets.

21. A temporary work platform is required for installation of the elevator.

22. If applicable, smoke and/or heat detectors with signals to elevator controller(s).

KUO DIEDRICH CHI
730 PEACHTREE STREET, NE
STUDIO 325
ATLANTA, GEORGIA 30308
678.244.6270
www.KDCarchitects.com

ARCHITECT:

ARCH. REG: AR91344

CONSULTANT:

REVISIONS

DATE:	DESCRIPTION:
10/18/24	SCHEMATIC DESIGN
6/5/25	DESIGN DEVELOPMENT
10/23/25	50% CONSTRUCTION DOCS
11/14/25	PERMIT SET

PROJECT:

SERENITY SEASIDE RESORT

BUILDING #1

THE INN

186 SOUTH BAY SHORE DRIVE, EASTPOINT, FL 32328

Serenity Seaside Operations, LLC
174 Watercolor Way, PMB 410
Santa Rosa Beach, Florida 32459

JOB NUMBER: 23019.1

DATE: --/--/----

TITLE: ELEVATOR DETAILS

SHEET: A721

K:\Projects\23\23019\DWGs\Serenity_Bldg-1_Inn\Sheets\23019.1-A721.dwg Plotted: Nov 13, 2025 - 6:28pm by ColebLawrence

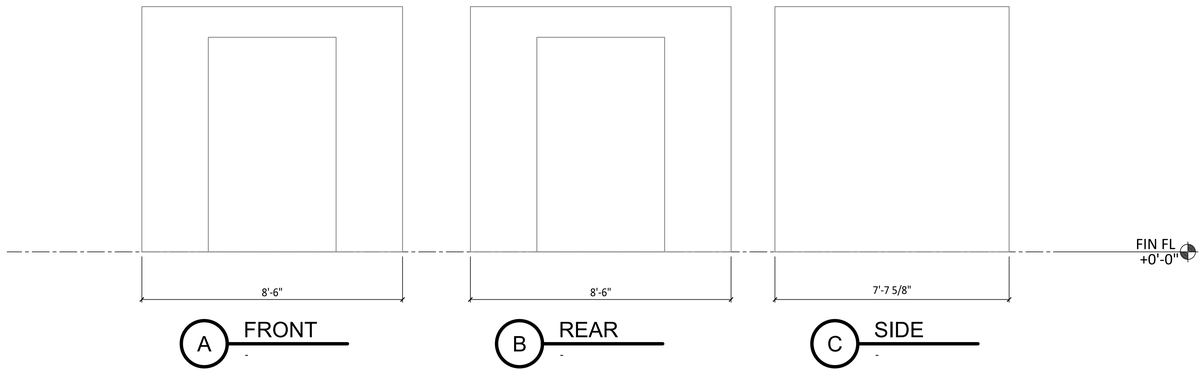

E1	INT ELEV @ ELEVATOR CAB "B" & "C" (SERVICE 3,500 LBS)
A722	1/2" = 1'-0"

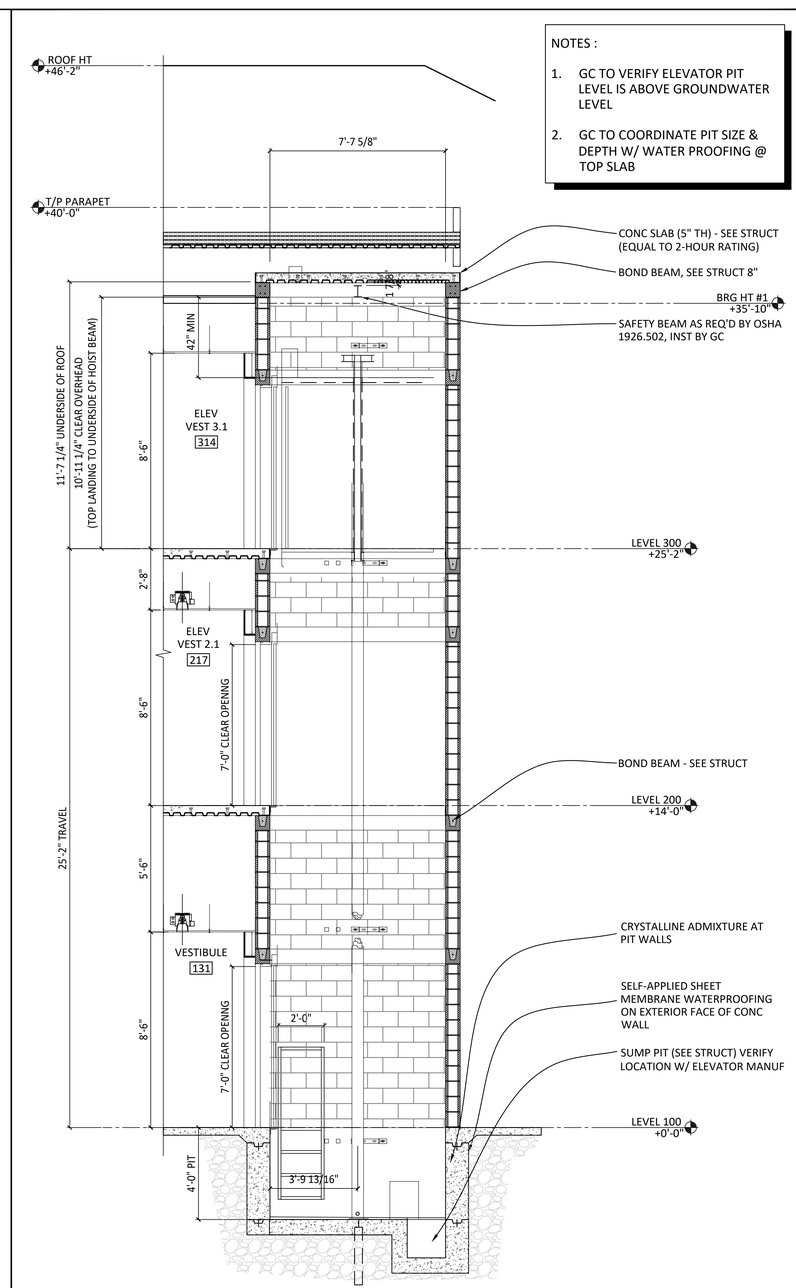

NOTES :

1. GC TO VERIFY ELEVATOR PIT LEVEL IS ABOVE GROUNDWATER LEVEL
2. GC TO COORDINATE PIT SIZE & DEPTH W/ WATER PROOFING @ TOP SLAB

A2	SECTION @ ELEVATOR "C" - 3,500 LBS
A722	3/8" = 1'-0"

NOTE:
SCHINDLER CAN ACCOMMODATE
8'-4" WIDE HOIST WAYS
WITH ZERO NEGATIVE TOLERANCE.
GC TO VERIFY W/ SCHINDLER
REPRESENTATIVE FOR MORE DETAIL

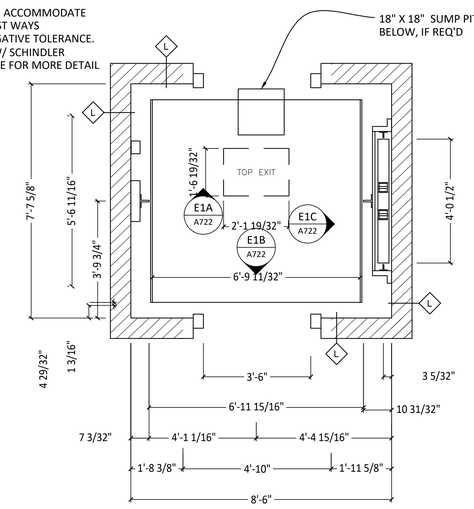

E5	PLAN @ ELEVATOR "B" (SERVICE 3,500) HOISTWAY
A722	1/2" = 1'-0"

SPECIFICATIONS: ELEVATOR #2	
PRODUCT NAME	: Schindler 3100 MRL Traction
SEISMIC ZONE	: NON-SEISMIC
CAPACITY	: 3500 lb
SPEED	: 100 FPM
DOOR	: CENTER OPENING
TRAVEL	: 26'-0"
CONTROL LOCATION	: INTEGRATED
POWER SUPPLY	: 460 V

BP = Breaker panel
8-7/8"Wx12-9/16"H

CB = Circuit breaker
8-5/8"Wx18-3/16"H
[219Wx461H]

Drive =10-1/8"x22-5/16"

A5	PLAN @ ELEVATOR "B" & "C" (3,500 LBS) HOISTWAY
A722	1/2" = 1'-0"

SHEET NOTES / LEGEND

1. -

GENERAL NOTES

A. -

KUO DIEDRICH CHI

730 PEACHTREE STREET, NE
STUDIO 325
ATLANTA, GEORGIA 30308
678.244.6270

www.KDCarchitects.com

ARCHITECT:

ARCH. REG: AR91344

CONSULTANT:

REVISIONS

DATE:	DESCRIPTION:
10/18/24	SCHEMATIC DESIGN
6/5/25	DESIGN DEVELOPMENT
10/23/25	50% CONSTRUCTION DOCS
11/14/25	PERMIT SET

PROJECT:

SERENITY SEASIDE RESORT

BUILDING #1

THE INN

186 SOUTH BAY SHORE DRIVE, EASTPOINT, FL 32328

Serenity Seaside Operations, LLC
174 Watercolor Way, PMB 410
Santa Rosa Beach, Florida 32459

JOB NUMBER: 23019.1

DATE: --/--/----

TITLE: ELEVATOR DETAILS

SHEET: A722

K:\Projects\23\23019\DWGs\Serenity_Bldg-1_Inn\Sheets\23019.1-A722.dwg Plotted: Nov 13, 2025 - 6:29pm by ColebLawrence

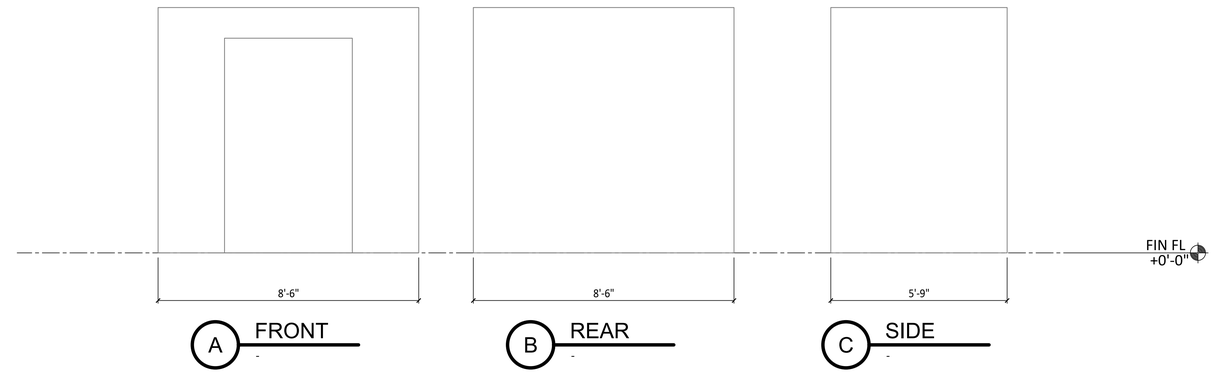

E3	INT ELEV @ ELEVATOR CAB "A" (PASSENGER 2,500 LBS)
A723	1/2" = 1'-0"

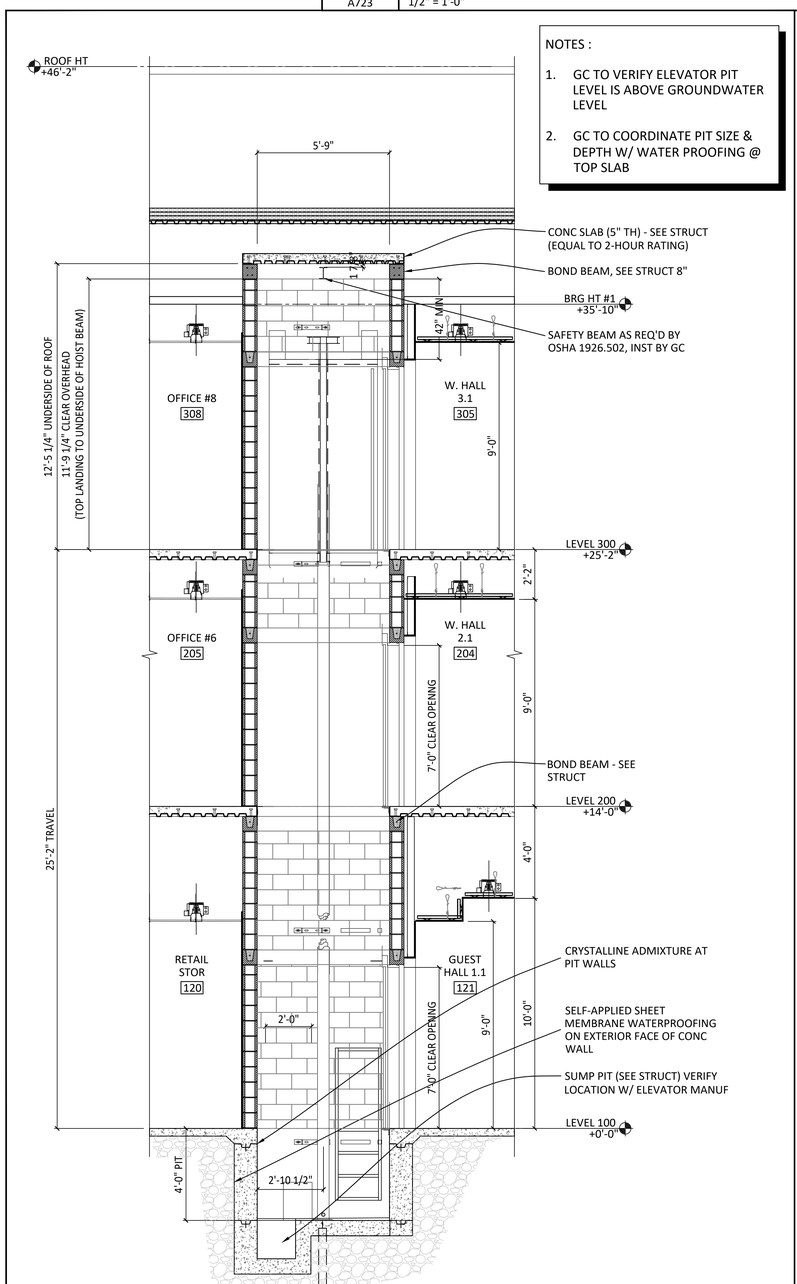

NOTES :

1. GC TO VERIFY ELEVATOR PIT LEVEL IS ABOVE GROUNDWATER LEVEL
2. GC TO COORDINATE PIT SIZE & DEPTH W/ WATER PROOFING @ TOP SLAB

A2	SECTION @ ELEVATOR "1" - 2,500 LBS
A723	3/8" = 1'-0"

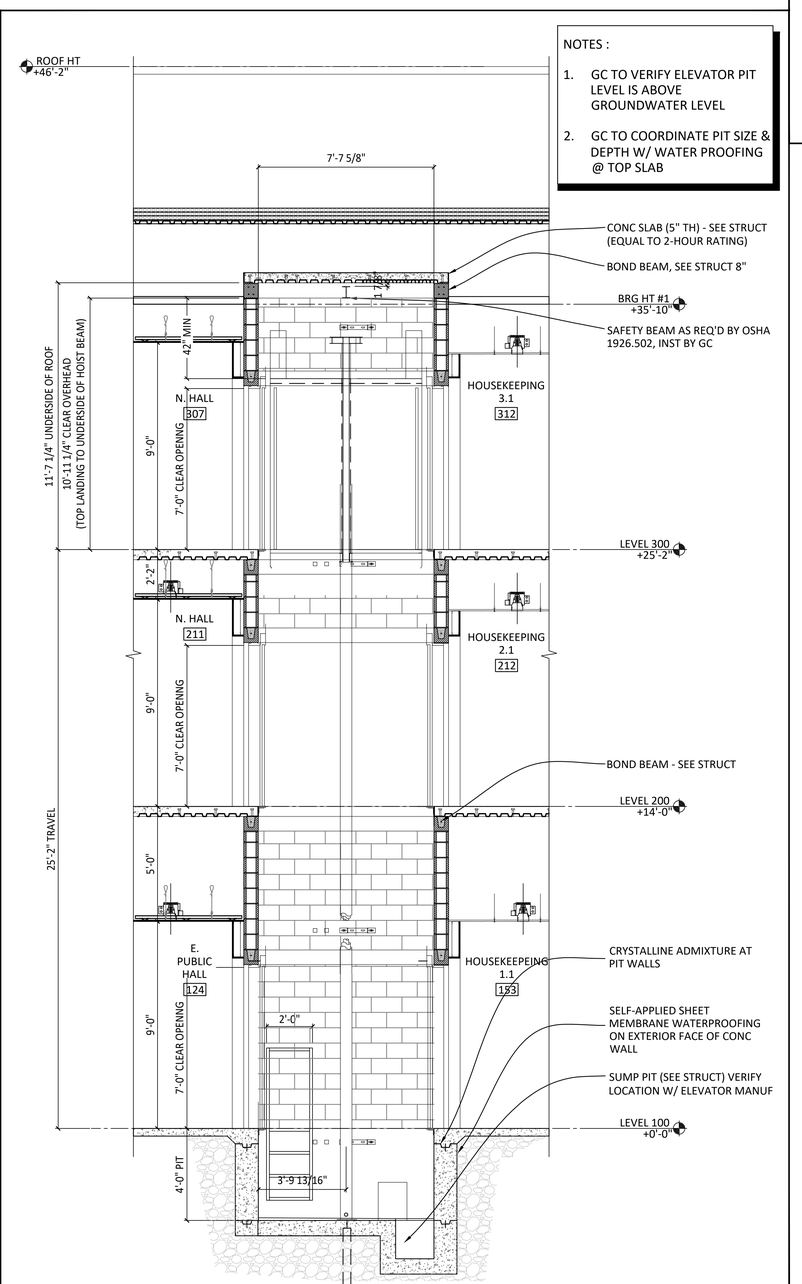

NOTES :

1. GC TO VERIFY ELEVATOR PIT LEVEL IS ABOVE GROUNDWATER LEVEL
2. GC TO COORDINATE PIT SIZE & DEPTH W/ WATER PROOFING @ TOP SLAB

A4	SECTION @ ELEVATOR "2" - 3,500 LBS
A723	3/8" = 1'-0"

SHEET NOTES / LEGEND

1. -

GENERAL NOTES

A. -

KUO DIEDRICH CHI

730 PEACHTREE STREET, NE
STUDIO 325
ATLANTA, GEORGIA 30308
678.244.6270

www.KDCarchitects.com

ARCHITECT:

ARCH. REG: AR91344

CONSULTANT:

REVISIONS

DATE:	DESCRIPTION:
10/18/24	SCHEMATIC DESIGN
6/5/25	DESIGN DEVELOPMENT
10/23/25	50% CONSTRUCTION DOCS
11/14/25	PERMIT SET

PROJECT:

SERENITY SEASIDE RESORT

BUILDING #1

THE INN

186 SOUTH BAY SHORE DRIVE, EASTPOINT, FL 32328

Serenity Seaside Operations, LLC
174 Watercolor Way, PMB 410
Santa Rosa Beach, Florida 32459

JOB NUMBER: 23019.1

DATE: --/--/----

TITLE: ELEVATOR DETAILS

SHEET: A723

K:\Projects\23\23019\DWGs\Serenity_Bldg-1_inn\Sheets\23019.1-A723.dwg Plotted: Nov 14, 2025 - 1:57pm by ColebLawrence

NOTE :

DESIGN BASIS:
LINEN CHUTE W/ 180 DEG SIDE HINGE DOORS

MANUF BY -
WILKINSON HI-RISE, LLC
3402 SW 26TH TERRACE
UNIT B-10
DANIA BEACH, FL 33312

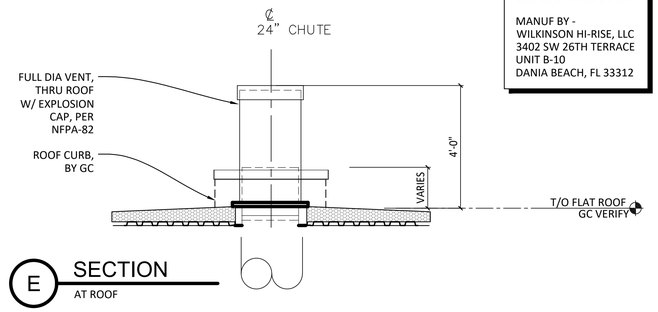

E SECTION
AT ROOF

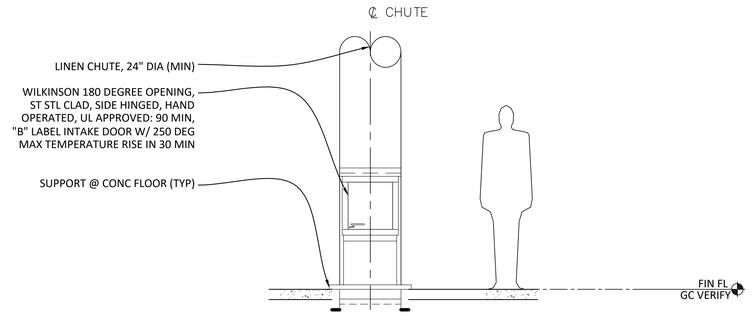

D FRONT ELEV
AT TYP FLOOR

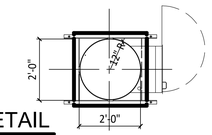

C PLAN DETAIL
CHUTE AT TYP FLOOR

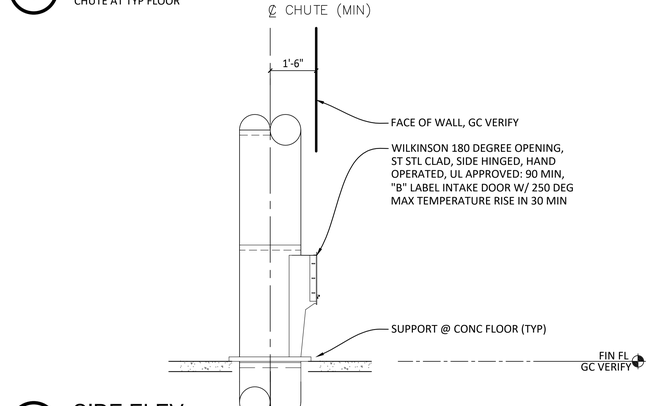

B SIDE ELEV
AT TYP FLOOR

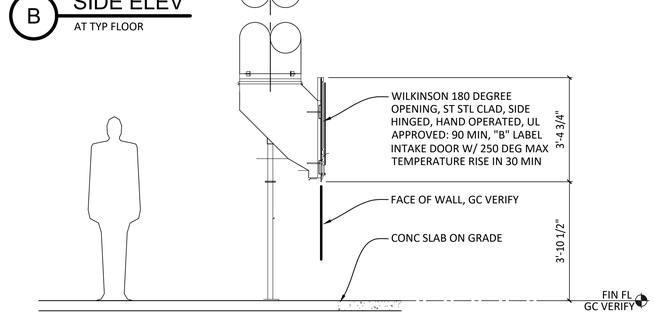

A SECTION
DISCHARGE LEVEL

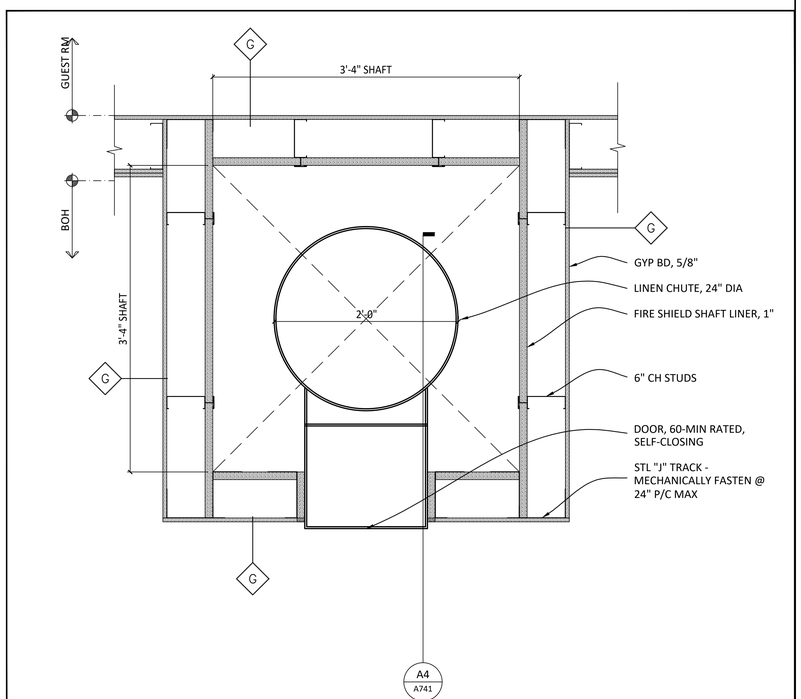

A2	PLAN DETAIL @ LINEN CHUTE
A741	1-1/2" = 1'-0"

A4	SECTION @ LINEN CHUTE
A741	1/2" = 1'-0"

SHEET NOTES / LEGEND

1. -

GENERAL NOTES

KUO DIEDRICH CHI

730 PEACHTREE STREET, NE
STUDIO 325
ATLANTA, GEORGIA 30308
678.244.6270

www.KDCarchitects.com

ARCHITECT:

ARCH. REG: AR91344

CONSULTANT:

REVISIONS

DATE:	DESCRIPTION:
10/18/24	SCHEMATIC DESIGN
6/5/25	DESIGN DEVELOPMENT
10/23/25	50% CONSTRUCTION DOCS
11/14/25	PERMIT SET

PROJECT:

SERENITY SEASIDE RESORT

BUILDING #1

THE INN

186 SOUTH BAY SHORE DRIVE, EASTPOINT, FL 32328

Serenity Seaside Operations, LLC
174 Watercolor Way, PMB 410
Santa Rosa Beach, Florida 32459

JOB NUMBER: 23019.1

DATE: --/--/----

TITLE: LINEN CHUTE DETAILS

SHEET: A741

K:\Projects\23\23019\DWGs\Serenity_Bldg-1_Inn\Sheets\23019.1-A741.dwg Plotted: Nov 14, 2025 - 2:11pm by CalebLawrence

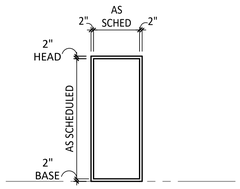

6 HM
FRAME, HEAD, & BASE (INT & EXT)

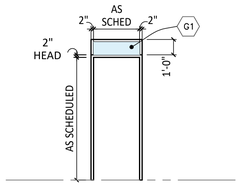

5 HM
FRAME & HEAD (EXT)

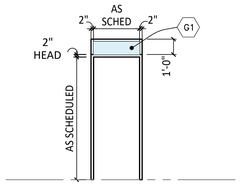

4 ALUM
FRAME & HEAD (EXT)

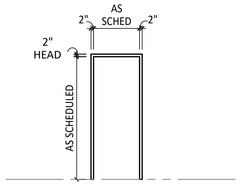

3 ALUM
FRAME & HEAD (EXT)

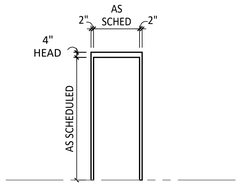

2 HM
2" FRAME & 4" HEAD (INT)

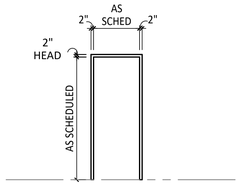

1 HM
2" FRAME & HEAD (INT)

DOOR & FRAME SCHEDULE: THE INN

LOCATION			DOOR						FRAME						CLOSER	FIRE RATING	CARD ACCESS	HARDWARE SET NO.	REMARKS	DOOR NO.
DOOR NO.	RM. NO.	ROOM NAME	TYPE	DOOR SIZE			MATERIAL	FINISH	GLAZING	TYPE	MATERIAL	FINISH	DETAILS							
				WIDTH	HEIGHT	THICK.							HEAD	JAMB	THRESHOLD						
101	101	LOBBY	E1	PR 3'-0"	8'-0"	1-3/4"	STL	FF	YES	4	ALUM	PT	H1	J1	T1	YES	--	--			101
103	103	VALET/LUGGAGE ROOM	C	3'-0"	8'-0"	1-3/4"	HM	PT	--	1	HM	PT	H12	--		--	--	--			103
103a	103	VALET/LUGGAGE ROOM	E2	4'-0"	8'-0"	1-3/4"	HM	PT	--	5	HM	PT	H1	J1	T1	YES	--	--			103a
104	104	RESORT SHOP	TBD	TBD	TBD	TBD	TBD	TBD	TBD	TBD	TBD	TBD	TBD	TBD	TBD	TBD	TBD	TBD	TBD	TBD	104
105	105	OFFICE RECEPTION	E	3'-0"	8'-0"	1-3/4"	WD	PT	YES	1	HM	PT	H11	--		--	--	--			105
106	106	OFFICE	E	3'-0"	8'-0"	1-3/4"	WD	PT	YES	1	HM	PT	H11	--		--	--	--			106
107	107	MEETING ROOM	E	PR 3'-0"	8'-0"	1-3/4"	WD	PT	YES	1	HM	PT	H11	--		--	--	--			107
107a	107	MEETING ROOM	E	PR 3'-0"	8'-0"	1-3/4"	WD	PT	YES	1	HM	PT	H11	--		--	--	--			107a
108	108	BAR ALLEY	E1	PR 3'-0"	8'-0"	1-3/4"	STL	FF	YES	3	ALUM	PT	H1	J1	T1	YES	--	--			108
110	110	RESTAURANT	E1	PR 3'-0"	8'-0"	1-3/4"	STL	FF	YES	3	ALUM	PT	H1	J1	T1	YES	--	--			110
111	111	FITNESS	E	3'-0"	8'-0"	1-3/4"	HM	PT	YES	1	HM	PT	H11	--		--	--	--			111
113	113	SPA LOBBY	E	3'-0"	8'-0"	1-3/4"	WD	PT	YES	1	HM	PT	H11	--		--	--	--			113
113a	113a	TREATMENT ROOM	C	3'-0"	8'-0"	1-3/4"	WD	PT	--	1	HM	PT	H11	--		--	--	--			113a
113b	113b	TREATMENT ROOM	C	3'-0"	8'-0"	1-3/4"	WD	PT	--	1	HM	PT	H11	--		--	--	--			113b
114	114	STOR	A	3'-0"	7'-0"	1-3/4"	HM	PT	--	1	HM	PT	H11	--		--	--	--			114
115	115	W RR VESTIBULE	C	3'-0"	8'-0"	1-3/4"	WD	PT	--	1	HM	PT	H11	--		--	--	--			115
115a	115a	MECH #1.6	C	3'-0"	7'-0"	1-3/4"	HM	PT	--	1	HM	PT	H11	--		--	--	--			115a
115b	115	W RR VESTIBULE	C	3'-0"	8'-0"	1-3/4"	WD	PT	--	1	HM	PT	H11	--		--	--	--			115b
116	116	W RR	CO	3'-0"	8'-0"	--	--	--	--	1	HM	PT	H11	--		--	--	--	--	CASED OPENING	116
116a	116a	W TLT	D	2'-6"	7'-0"	1-3/4"	WD	PT	--	1	HM	PT	H11	--		--	--	--			116a
116b	116b	W TLT	D	2'-6"	7'-0"	1-3/4"	WD	PT	--	1	HM	PT	H11	--		--	--	--			116b
116c	116c	W TLT	D	2'-6"	7'-0"	1-3/4"	WD	PT	--	1	HM	PT	H11	--		--	--	--			116c
116d	116d	W TLT ADA	D	3'-0"	7'-0"	1-3/4"	WD	PT	--	1	HM	PT	H11	--		--	--	--			116d
116e	116	W RR	CO	3'-0"	8'-0"	--	--	--	--	1	HM	PT	H11	--		--	--	--	--	CASED OPENING	116e
117	117	M RR VESTIBULE	C	3'-0"	8'-0"	1-3/4"	WD	PT	--	1	HM	PT	H11	--		--	--	--			117
117a	117a	MECH #1.7	C	3'-0"	7'-0"	1-3/4"	HM	PT	--	1	HM	PT	H11	--		--	--	--			117a
118	118	M LAV	CO	3'-0"	8'-0"	--	--	--	--	1	HM	PT	H11	--		--	--	--	--	CASED OPENING	118
118a	118a	M URINALS	CO	3'-0"	8'-0"	--	--	--	--	1	HM	PT	H11	--		--	--	--	--	CASED OPENING	118a
118b	118b	M TLT	D	2'-6"	7'-0"	1-3/4"	WD	PT	--	1	HM	PT	H11	--		--	--	--			118b
118c	118c	M TLT ADA	D	3'-0"	7'-0"	1-3/4"	WD	PT	--	1	HM	PT	H11	--		--	--	--			118c
119	119	MAIN CIRC VESTIBULE	CO	3'-0"	8'-0"	--	--	--	--	1	HM	PT	H11	--		--	--	--	--	CASED OPENING	119
119a	119	MAIN CIRC VESTIBULE	A	PR 3'-6"	8'-0"	1-3/4"	HM	PT	--	1	HM	PT	H11	--		YES	45 MIN	--	--	HOLD OPENS W/ AUTO DOOR CLOSER & PANIC HARDWARE	119a
120	120	RETAIL STOR	B	3'-0"	7'-0"	1-3/4"	HM	PT	--	1	HM	PT	H11	--		--	--	--			120
122	122	GUEST HALL #1.2	E1	3'-0"	8'-0"	1-3/4"	ALUM	FF	YES	4	ALUM	PT	H1	J1	T1	YES	--	--			122
123	123	ICE #1.1	L	3'-0"	7'-0"	1-3/4"	WD	PT	--	1	HM	PT	H11	--		--	--	--			123
124	124	E PUBLIC HALL	CO	3'-0"	8'-0"	--	--	--	--	1	HM	PT	H11	--		--	--	--	--	CASED OPENING	124
124	124a	E PUBLIC HALL	CO	3'-0"	8'-0"	--	--	--	--	1	HM	PT	H11	--		--	--	--	--	CASED OPENING	124
125	125	KITCHEN	CO	4'-0"	8'-0"	--	--	--	--	1	HM	PT	H11	--		--	--	--	--	CASED OPENING	125
125a	125a	MECH #1.3	A	3'-0"	7'-0"	1-3/4"	HM	PT	--	1	HM	PT	H11	--		--	--	--			125a
125b	125b	MECH #1.1	A	3'-0"	7'-0"	1-3/4"	HM	PT	--	1	HM	PT	H11	--		--	--	--			125b
125c	125	KITCHEN	F	3'-0"	7'-0"	1-3/4"	HM	PT	YES	1	HM	PT	H12	--		--	--	--			125c
125d	125	KITCHEN	F	3'-0"	7'-0"	1-3/4"	HM	PT	YES	1	HM	PT	H12	--		--	--	--			125d
129	129	DRINKS	A	3'-0"	7'-0"	1-3/4"	HM	PT	--	1	HM	PT	H11	--		--	--	--			129
130	130	SERVER STATION	E2	3'-0"	8'-0"	1-3/4"	HM	PT	--	1	HM	PT	H1	J1	T1	YES	--	--			130
130a	130	SERVER STATION	CO	5'-0"	8'-0"	--	--	--	--	1	HM	PT	H11	--		--	--	--			130a
130b	130	SERVER STATION	F	3'-0"	7'-0"	1-3/4"	HM	PT	--	1	HM	PT	H12	--		--	--	--	--		130b
130c	130	SERVER STATION	F	3'-0"	7'-0"	1-3/4"	HM	PT	--	1	HM	PT	H12	--		--	--	--			130c
131	131	VESTIBULE	CO	3'-0"	8'-0"	--	--	--	--	1	HM	PT	H11	--		--	--	--	--	CASED OPENING	131
132a	132a	MECH #1.5	A	4'-0"	7'-0"	1-3/4"	HM	PT	--	1	HM	PT	H11	--		--	--	--			132a
135	135	WATER HEATERS	A	PR 3'-0"	7'-0"	1-3/4"	HM	PT	--	1	HM	PT	H11	--		YES	90 MIN	--			135
136	136	RECEIVING	E3	PR 3'-0"	8'-0"	1-3/4"	HM	PT	YES	1	HM	PT	H1	J1	T1	YES	--	--			136
137	137	JAN	A	4'-0"	7'-0"	1-3/4"	HM	PT	--	1	HM	PT	H11	--		--	--	--			137
142	142	ATS	A	3'-0"	7'-0"	1-3/4"	HM	PT	--	1	HM	PT	H11	--		YES	90 MIN	--			142
143	143	ELEC RM	A	3'-0"	7'-0"	1-3/4"	HM	PT	--	1	HM	PT	H11	--		YES	60 MIN	--			143
143a	143	ELEC RM	E2	3'-0"	8'-0"	1-3/4"	HM	PT	--	1	HM	PT	H1	J1	T1	YES	--	--			143a
144	144	STAFF BREAK RM	L	3'-0"	8'-0"	1-3/4"	HM	PT	--	1	HM	PT	H11	--		--	--	--			144
144a	144a	W STAFF	B	3'-0"	7'-0"	1-3/4"	HM	PT	--	1	HM	PT	H11	--		--	--	--			144a
144b	144b	M STAFF	B	3'-0"	7'-0"	1-3/4"	HM	PT	--	1	HM	PT	H11	--		--	--	--			144b
144c	144c	STAFF LR	CO	4'-0"	7'-0"	--	--	--	--	1	HM	PT	H11	--		--	--	--	--	CASED OPENING	144c
145	145	OFFICE #1	L	3'-0"	8'-0"	1-3/4"	HM	PT	YES	1	HM	PT	H11	--		--	--	--			145
146	146	MDF	A	3'-0"	7'-0"	1-3/4"	HM	PT	--	1	HM	PT	H11	--		YES	90 MIN	--			146
147	147	OPEN OFFICE	L	3'-0"	8'-0"	1-3/4"	HM	PT	YES	1	HM	PT	H11	--		--	--	--			147
147a	147a	MECH #1.4	A	3'-0"	7'-0"	1-3/4"	HM	PT	--	1	HM	PT	H11	--		--	--	--			147a
148	148	VESTIBULE	C	3'-0"	8'-0"	1-3/4"	HM	PT	--	1	HM	PT	H11	--		--	--	--			148
149	149	LAUNDRY	K	PR 3'-0"	8'-0"	1-3/4"	MH	PT	--	1	HM	PT	H11	--		--	--	--			149
149a	149	LAUNDRY	E2	3'-0"	8'-0"	1-3/4"	HM	PT	--	1	HM	PT	H1	J1	T1	YES	--	--			149a
153	153	HOUSEKEEPING #1.1	B	4'-0"	7'-0"	1-3/4"	HM	PT	--	1	HM	PT	H11	--		--	60 MIN	--			153
153a	153a	MECH #1.2	A	4'-0"	7'-0"	1-3/4"	HM	PT	--	1	HM	PT	H11	--		--	60 MIN	--			153a
153b	153	LINEN CHUTE #1.1	A	2'-0"	6'-0"	1-3/4"	HM	PT	--	1	HM	PT	H11	--		YES	60 MIN	--			153a
154	154	IDF #1	A	3'-0"	7'-0"	1-3/4"	HM	PT	--	1	HM	PT	H11	--		--	60 MIN	--			154
201	201	CLOSET	A	3'-0"	7'-0"	1-3/4"	HM	PT	--	1	HM	PT	H11	--		--	--	--			201
203	203	ICE #2.1	L	3'-0"	7'-0"	1-3/4"	WD	PT	yes	1	HM	PT	H11	--		--	--	--			203
205	205	OFFICE #6	B	3'-0"	8'-0"	1-3/4"	WD	PT	--	1	HM	PT	H11	--		--	--	--			205
206	206	OFFICE #3	B	3'-0"	8'-0"	1-3/4"	WD	PT	--	1	HM	PT	H11	--		--	--	--			206
206a	206	MECH #2.2	A	3'-0"	7'-0"	1-3/4"	HM	PT	--	1	HM	PT	H11	--		--	--	--			206a
207	207	OFFICE: ACCT	L	3'-0"	8'-0"	1-3/4"	WD	PT	YES	1	HM	PT	H11	--		--	--	--			207
209	209	FILES	B	3'-0"	7'-0"	1-3/4"	WD	PT	--	1	HM	PT	H11	--		--	--	--			209
212	212	HOUSEKEEPING #2.1	B	4'-0"	7'-0"	1-3/4"	HM	PT	--	1	HM	PT	H11	--		--	45 MIN	--			212
212b	212b	LINEN CHUTE #2.1	A	2'-0"	6'-0"	1-3/4"	HM	PT	--	1	HM	PT	H11	--		--	60 MIN	--			212b
214	214	OFFICE #8	B	3'-0"	8'-0"	1-3/4"	WD	PT	--	1	HM	PT	H11	--		--	--	--			214
214a	214a	MECH #2.1	A	3'-0"	7'-0"	1-3/4"	HM	PT	--	1	HM	PT	H11	--		--	--	--			214a
214b	214b	MECH #2.3	A	3'-0"	7'-0"	1-3/4"	HM	PT	--	1	HM	PT	H11	--		--	--	--			214b
215	215	IDF #2	A	3'-0"	7'-0"	1-3/4"	HM	PT	--	1	HM	PT	H11	--		--	45 MIN	--			215
217	217	ELEV VEST #2.1	B	4'-0"	7'-0"	1-3/4"	WD	PT	--	1	HM	PT	H11	--		--	--	--			217
218	218	REFRESH	L	4'-0"	7'-0"	1-3/4"	WD	PT	--	1	HM	PT	H11	--		--	--	--			218
219	219	ROOF	A	3'-0"	7'-0"	1-3/4"	HM	PT	--	1	HM	PT	H11	--	--	--	--	--			219
301	301	CLOSET	B	3'-0"	7'-0"	1-3/4"	WD	PT	--	1	HM	PT	H11	--		--	--	--			301
304	304	ICE #3.1	L	3'-0"	7'-0"	1-3/4"	WD	PT	YES	1	HM	PT	H11	--		--	--	--			304
308	308	OFFICE #9	B	3'-0"	8'-0"	1-3/4"	WD	PT	--	1	HM	PT	H11	--		--	--	--			308
311	311	IDF #3	A	3'-0"	7'-0"	#3.2	HM	PT	--	1	HM	PT	H11	--		--	45 MIN	--			311
312	312	HOUSEKEEPING #3.1	B	4'-0"	7'-0"	1-3/4"	WD	PT	--	1	HM	PT	H11	--		--	45 MIN	--			312
312b	312b	LINEN CHUTE #3.1	A	2'-0"	6'-0"	1-3/4"	HM	PT	--	1	HM	PT	H11	--		--	60 MIN	--			312b
314	314	ELEV VEST #3.1	B	3'-0"	7'-0"	1-3/4"	WD	PT	--	1	HM	PT	H11	--		--	--	--			314

SHEET NOTES / LEGEND

1. ALL WD IS POPLAR, PAINTED - BY ID, SEE ID

GENERAL NOTES

A. SEE SHEET A811 FOR DOOR TYPES/ELEVATIONS

B. EXIT DOORS SHALL MEET THE REQUIREMENTS OF 2018 IBC 1003.3.1, 1005 AND 1008.

C. EXCEPT AS OTHERWISE NOTED, ALL EXITS TO BE OPERABLE FROM THE INSIDE, WITHOUT THE USE OF A KEY OR ANY SPECIAL KNOWLEDGE.

D. ALL GLAZING IN DOORS/WINDOWS SHALL COMPLY WITH 2023 FBC 1405.12 AND APPLICABLE ENERGY CODES.

E. ALL DOOR THRESHOLDS TO HAVE A MAXIMUM CHANGE IN ELEVATION OF 1/2" FROM THE FINISH FLOOR ON EITHER SIDE OF THE THRESHOLD.

F. ALL GLAZING IN DOORS, AND WITHIN 24" OF VERTICAL EDGES OF DOORS (BELOW 60" AFF) AND ELSEWHERE AS REQUIRED BY CODE, SHALL BE TEMPERED SAFETY GLASS COMPLYING WITH 2023 FBC 2406.

G. ALL WOOD STILE AND RAIL DOORS SHALL HAVE STANDARD STILE AND RAIL WIDTHS, EXCEPT FOR THE BOTTOM RAIL WHICH IS TO BE 10".

H. GC TO FIELD VERIFY ALL DOOR DIMENSIONS, INCLUDING DOOR THICKNESS.

I. GC TO COORDINATE ALL EXTERIOR DOORS & FRAMES W/ OWNER'S SECURITY SYSTEM VENDOR.

J. GC TO VERIFY SWING ANGLE AND PATH AT ALL DOORS.

K. CODE REQUIRED CLEARANCES AT DOORS - SEE SHEETS G113 & G114

L. ALL VISION PANELS IN METAL DOORS & RATED WOOD DOORS SHALL HAVE METAL FRAMES & STOPS

M. ALL EXTERIOR HM DOORS & FRAMES TO BE INSULATED & WEATHERSTRIPPED

N. WHERE DOOR DIMENSION IS NOT LOCATED IN PLAN, USE TYPICAL DIMENSION OF 4" BETWEEN FACE OF FRAME & ADJACENT PERPENDICULAR WALL (ADJUST DIMEN IF ANY WOOD MOULDING IS SCHEDULED FOR DOOR FRAME).

O. WHERE INTERIOR PARTITION IS SCHEDULED TO HAVE SOUND ATTENUATION BATTS, FILL H.M. FRAME (JAMBS & HEAD) W/ SAME & CAULK FULL PERIMETER OF FRAME @ BOTH SIDES OF WALL.

P. ELEC RM DOORS TO HAVE PANIC TYPE HARDWARE PER NFPA 70, SECTION 110.26 (C) (3)

LEGEND

AL	ALUMINUM CLAD
ALUM	ALUMINUM
CO	CASED OPENING
FF	FACTORY FINISH
FG	FIBERGLASS
FR	FRAME
HM	HOLLOW METAL
GL	GLASS/GLAZING
KY	KYDEX SERVICE DOOR
MFT	MANUFACTURER
PT	PAINT
PR	PAIR
WS	WOOD STAIN
WD	WOOD

KUO DIEDRICH CHI
730 PEACHTREE STREET, NE
STUDIO 325
ATLANTA, GEORGIA 30308
678.244.6270
www.KDCarchitects.com

ARCHITECT:

ARCH. REG: AR91344

CONSULTANT:

REVISIONS

DATE:	DESCRIPTION:
10/18/24	SCHEMATIC DESIGN
6/5/25	DESIGN DEVELOPMENT
10/23/25	50% CONSTRUCTION DOCS
11/14/25	PERMIT SET

PROJECT:

SERENITY SEASIDE RESORT

BUILDING #1

THE INN

186 SOUTH BAY SHORE DRIVE, EASTPOINT, FL 32328

Serenity Seaside Operations, LLC
174 Watercolor Way, PMB 410
Santa Rosa Beach, Florida 32459

JOB NUMBER: 23019.1

DATE: --/--/----

TITLE:

DOOR SCHEDULE & DOOR FRAME TYPES

SHEET:

A801

A1	DOOR FRAME ELEV	A2	DOOR SCHEDULE
A801	1'-4" = 1'-0"	A801	NTS

K:\Projects\23\23019\DWGs\Serenity_Bldg-1_Inn\Sheets\23019.1-A801.dwg Plotted: Nov. 13, 2025 - 6:29pm by CalebLawrence

THE INN																				
			DOOR						FRAME											
DOOR NO.	LOCATION		TYPE	DOOR SIZE			MATERIAL	FINISH	GLAZING	TYPE	MATERIAL	FINISH	DETAILS			CLOSER	FIRE RATING	CARD ACCESS	HARDWARE SET NO.	REMARKS	DOOR NO.
	RM. NO.	ROOM NAME		WIDTH	HEIGHT	THICK.							HEAD	JAMB	THRESHOLD						
U01	--	ENTRY	C	3'-0"	7'-0"	1-3/4"	WD	PT	--	1	HM	PT	H12	--		--	20 MIN	Y			U01
U02	--	BATHROOM - BARN DOOR	H	3'-3"	7'-0"	1-3/4"	WD	PT	--	1	HM	PT	H7	J7	T7	--	--	--		HM FRAME OPENING IS 3'-0" / SEE DETAIL B, SHEET C6/A824	U02
U03	--	VESTIBULE - CASED OPENING	CO	3'-0"	7'-0"	--	WD	PT	--	CO3	HM	PT	H11	--		--	--	--	--		U03
U04	--	SHOWER - FRAMELESS GLASS	G	2'-6"	6'-8"	1/2"	GLASS	--	YES	--	--	--	--	--	--	--	--	--			U04
U05	--	STORAGE SHELVING - CASED OPENING	CO	3'-0"	7'-0"	1-3/4"	--	--	--	CO3	HM	PT	H11	--		--	--	--	--		U05
U06	--	SUITE MASTER BEDROOM	B	3'-0"	7'-0"	1-3/4"	WD	PT	--	1	HM	PT	H11	--		--	--	--			U06
U07	--	BALCONY - SLIDING	E4	PR 3'-0"	8'-0"	1-7/8"	ALUM	FF	YES	1	ALUM	PT	H5/H2	J5/J6	T5/T6	--	--	--			U07
U08	--	SUITE MASTER BALCONY	E6	3'-0"	8'-0"	1-3/4"	ALUM	FF	YES	1	ALUM	PT	H3/H6	J3/J6	T5-SIM/ T6-SIM	YES	--	--			U08
U09	--	ADA BATHROOM	C	3'-0"	7'-0"	1-3/4"	WD	PT	--	1	HM	PT	H11	--		--	--	--			U09
U10	--	SUITE TOILET	A	3'-0"	7'-0"	1-3/4"	WD	PT	--	1	HM	PT	H11	--		--	--	--			U10
U11	--	COMMUNICATING - ONE SIDE LEVER ONLY	J	3'-0"	7'-0"	1-3/4"	WD	PT	--	1	HM	PT	H9	J9	T9	YES	20 MIN	--			U11
U12	--	COMMUNICATING - ONE SIDE LEVER ONLY	J	3'-0"	7'-0"	1-3/4"	WD	PT	--	1	HM	PT	H9	J9	T9	YES	20 MIN	--			U12
U13	--	ADA BALCONY - SINGLE ACTIVE FRENCH DOOR	E5	PR 3'-0"	8'-0"	1-3/4"	ALUM	FF	YES	1	ALUM	PT	H3/H6	J3/J6	T5-SIM/ T6-SIM	YES	--	--		ONE OPERABLE PANEL & ONE FIXED PANEL	U13
S11A	151	STAIR #1 - INTERIOR	K	PR 3'-0"	7'-0"	1-3/4"	WD	PT	YES	2	HM	PT	H8	J8	--	YES	60 MIN	--		"HOLD OPENS W/ AUTO DOOR CLOSER & PANIC HARDWARE"	S11A
S11B	151	STAIR #1 - EXTERIOR	E1	3'-0"	8'-0"	1-3/4"	ALUM	PT	YES	4	ALUM	FF	H4	J4	T1	YES	--	--			S11B
S12A	155	STAIR #2 - INTERIOR	K	3'-0"	7'-0"	1-3/4"	WD	PT	YES	2	HM	PT	H8	J8	--	YES	60 MIN	--			S12A
S12B	155	STAIR #2 - EXTERIOR	E2	3'-0"	7'-0"	1-3/4"	ALUM	PT	--	2	ALUM	PT	H4	J4	T1	YES	---	--			S12B
S13A	133	STAIR #3 - INTERIOR	K	3'-0"	7'-0"	1-3/4"	WD	PT	YES	2	HM	PT	H8	J8	--	YES	60 MIN	--			S13A
S13B	133	STAIR #3 - EXTERIOR	E2	3'-0"	7'-0"	1-3/4"	ALUM	PT	--	2	ALUM	PT	H4	J4	T1	YES	--	--			S13B
S21A	210	STAIR #1 - INTERIOR	K	4'-0"	7'-0"	1-3/4"	WD	PT	YES	2	HM	PT	H8	J8	--	YES	60 MIN	--		HOLD OPENS W/ AUTO DOOR CLOSER & PANIC HARDWARE	S21A
S22A	202	STAIR #2 - INTERIOR	K	3'-0"	7'-0"	1-3/4"	WD	PT	YES	2	HM	PT	H8	J8	--	YES	60 MIN	--			S22A
S23A	213	STAIR #3 - INTERIOR	K	3'-0"	7'-0"	1-3/4"	WD	PT	YES	2	HM	PT	H8	J8	--	YES	60 MIN	--			S23A
S31A	310	STAIR #1 - INTERIOR	K	4'-0"	7'-0"	1-3/4"	WD	PT	YES	2	HM	PT	H8	J8	--	YES	60 MIN	--		HOLD OPENS W/ AUTO DOOR CLOSER & PANIC HARDWARE	S31A
S32A	302	STAIR #2 - INTERIOR	K	3'-0"	7'-0"	1-3/4"	WD	PT	YES	2	HM	PT	H8	J8	--	YES	60 MIN	--			S32A
S33A	313	STAIR #3 - INTERIOR	K	3'-0"	7'-0"	1-3/4"	WD	PT	YES	2	HM	PT	H8	J8	--	YES	60 MIN	--			S33A

D1 DOOR SCHEDULE - 2 OF 2

A802 NTS

SHEET NOTES / LEGEND

1. SEE NOA REFERENCES ON G114 FOR EXTERIOR DOOR INFO

GENERAL NOTES

A. REFER TO GLAZING SCHEDULE ON SHEET A802

B. REFER TO THE FOLLOWNG SPECIFICATION SECTIONS FOR ADDITIONAL INFO FOR DOORS & WINDOWS:

Section 08 1110	Steel Doors & Frames
Section 08 1433	Wood Stile & Rail Doors
Section 08 2100	Flush Wood Doors
Section 08 3800	Traffic Doors
Section 08 4113	Aluminum-Framed Storefronts
Section 08 7100	Door Hardware
Section 08 8000	Glazing

KUO DIEDRICH CHI

730 PEACHTREE STREET, NE
STUDIO 325
ATLANTA, GEORGIA 30308
678.244.6270

www.KDCarchitects.com

ARCHITECT:

ARCH. REG: AR91344

CONSULTANT:

REVISIONS

DATE:	DESCRIPTION:
10/18/24	SCHEMATIC DESIGN
6/5/25	DESIGN DEVELOPMENT
10/23/25	50% CONSTRUCTION DOCS
11/14/25	PERMIT SET

PROJECT:

SERENITY SEASIDE RESORT

BUILDING #1

THE INN

186 SOUTH BAY SHORE DRIVE, EASTPOINT, FL 32328

Serenity Seaside Operations, LLC
174 Watercolor Way, PMB 410
Santa Rosa Beach, Florida 32459

JOB NUMBER: 23019.1

DATE: --/--/----

TITLE: DOOR SCHEDULE & DOOR ELEVATIONS - EXTERIOR

SHEET: A802

NOTES:

1. DESIGN BASIS FOR ALUM DOOR IS KAWNEER TRIFAB 451

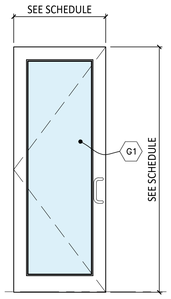

1-3/4" TH.,
ALUM. STOREFRONT:
INSULATED/TEMPERED
GLASS PANEL

E1 DOOR EXTERIOR

NOTES:

1. DESIGN BASIS FOR METAL DOOR: MANUF. CURRIES, CURRISTAIN (WOOD GRAIN)

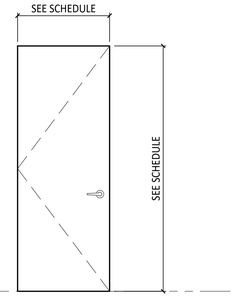

1-3/4" TH.,
HM DOOR

E2 DOOR EXTERIOR

NOTES:

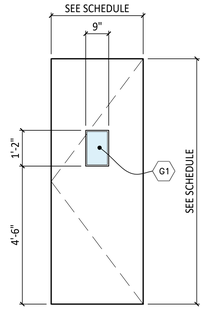

E3 DOOR EXTERIOR

NOTES:

1. DESIGN BASIS FOR ALUM DOOR IS PGT SGD-770 NOA #24-1219.08
2. GLAZING IS 3/16" TH ON EACH SIDE OF 1-1/16" AIR SPACE

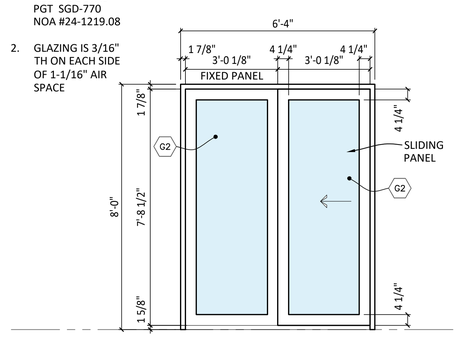

1-7/8" TH.,
SERIES "5470" VINYL SLIDING GLASS DOOR
(RENIFNORCED)

E4 DOOR EXTERIOR

NOTES:

1. DESIGN BASIS FOR ALUM DOOR IS ENVIRALUM ENV-350E FL #20701.5
2. SEE GUESTROOM UNIT PLAN FOR DOOR SWING ORIENTATION

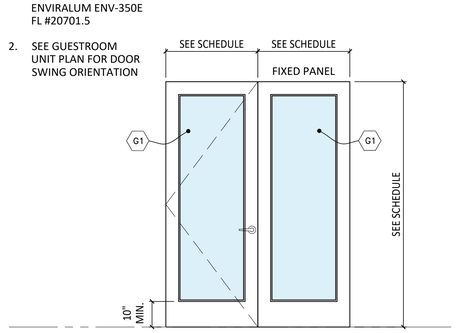

1-3/4" TH.,
ALUM. STOREFRONT:
INSULATED/TEMPERED
GLASS PANEL

E5 SINGLE ACTIVE FRENCH DOOR EXTERIOR

NOTES:

1. DESIGN BASIS FOR ALUM DOOR IS KAWNEER TRIFAB 451

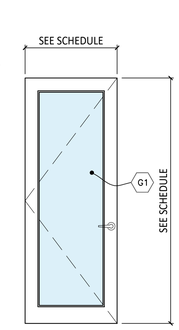

1-3/4" TH.,
ALUM. STOREFRONT:
INSULATED/TEMPERED
GLASS PANEL

E6 DOOR EXTERIOR

GLAZING LEGEND

TYPE	DESCRIPTION	LOCATION	U-FACTOR	SHGC
G1	DOUBLE INSULATED, TEMPERED GLASS PANEL, 1" THICK	ALUM DOORS & WINDOWS	0.26	0.22
G2	DOUBLE INSULATED, TEMPERED GLASS PANEL, 1" THICK	ALUM SLDING DOORS	0.27	0.16
G3	FIRELITE PLUS, 1HR FIRE-RATED, SAFETY-RATED CERAMIC GLASS	WD EGRESS DOORS	--	--
G4	CLEAR, TEMPERED, 3/8" TH.	WD DOORS	--	--
G5	FROSTED, TEMPERED, 3/8" TH.	SHOWER DOORS	--	--
G6	DOUBLE INSULATED SPANDREL, TEMPERED GLASS PLANEL, 1" THICK			
MTL	BRAKE METAL (FINISH TO MATCH ADJACENT MULLIONS)			
ABBREVIATIONS				
D.O.	DOOR OPENING			
D.L.O.	DAYLITE OPENING			
F.O.S.	FACE OF STRUCTURE			
F.S.	FRAME SIZE			
R.O.	ROUGH OPENING			
	*See Cut-Sheets for More Info			

A1 GLAZING SCHEDULE

A802 NTS

A3 DOOR ELEVATION (EXTERIOR)

A802 1/2" = 1'-0"

K:\Projects\23\23019\DWGs\Serenity_Bldg-1_Inn\Sheets\23019.1-A802.dwg Plotted: Nov 13, 2025 - 6:29pm by ColebLawrence

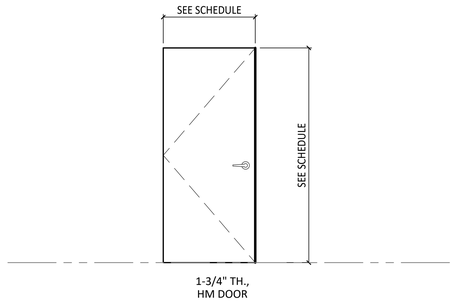

1-3/4" TH.,
HM DOOR

A DOOR TYPE
INTERIOR

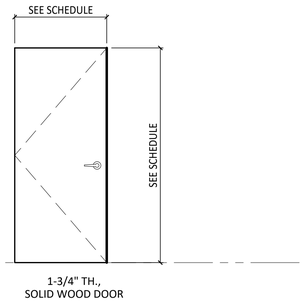

1-3/4" TH.,
SOLID WOOD DOOR

B DOOR
INTERIOR

NOTES:

1. DESIGN BASIS IS INTERIOR WOOD DOOR MANUF BY SIMPSON DOOR COMPANY - "#720 SHAKER STYLE FLAT PANEL"
2. WOOD SPECIES FOR PAINTED FINISH - POPLAR
3. WOOD SPECIES FOR STAINED FINISH - WHITE OAK

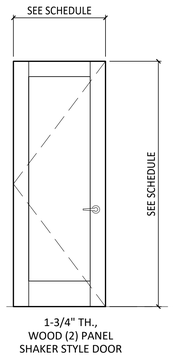

1-3/4" TH.,
WOOD (2) PANEL
SHAKER STYLE DOOR

C DOOR
INTERIOR

SHEET NOTES / LEGEND

1. TBD

GENERAL NOTES

A. REFER TO GLAZING SCHEDULE ON SHEET A802

B. REFER TO THE FOLLOWNG SPECIFICATION SECTIONS FOR ADDITIONAL INFO FOR DOORS & WINDOWS:

Section 08 1110	Steel Doors & Frames
Section 08 1433	Wood Stile & Rail Doors
Section 08 2100	Flush Wood Doors
Section 08 3800	Traffic Doors
Section 08 4113	Aluminum-Framed Storefronts
Section 08 7100	Door Hardware
Section 08 8000	Glazing

NOTES

1. STD. STICKING
2. 1/4" SLAT LOUVERS

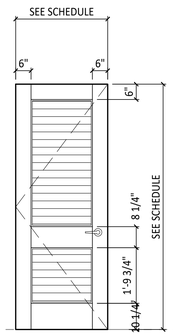

1-3/4" TH.,
(2) PANEL LOUVERED,
SOLID WOOD DOOR

D DOOR TYPE
INTERIOR

NOTES:

1. TEMPERED GLAZING
2. NO MUNTINS
3. INTERIOR WOOD FINISH (COORDINATE W/ ID FINISH SCHEDULE)
4. DESIGN BASIS IS INTERIOR WOOD FRENCH DOOR MANUF BY SIMPSON DOOR COMPANY -"#7002"
5. WOOD SPECIES FOR PAINTED FINISH - POPLAR
6. WOOD SPECIES FOR STAINED FINISH - WHITE OAK

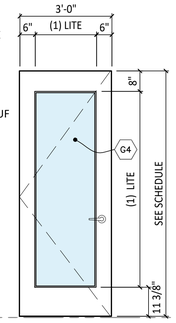

1-3/4" TH.,
SOLID WOOD DOOR :
TEMPERED GLASS PANEL

E DOOR
INTERIOR

NOTES:

1. DESIGN BASIS: ELIASON TRAFFIC DOOR : MODEL # SCP-5
2. GLAZING AT DOOR IS CLEAR.
3. THIS DOOR IS ONLY IN BUILDING #1

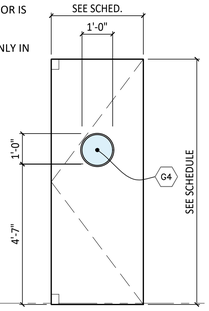

1-1/2" TH.,
KITCHEN TRAFFIC DOOR ,
1/4" TH. TEMPERED GLASS

F DOOR
INTERIOR

NOTES

1. DESIGN BASIS IS SWINGING GLASS SHOWER DOOR W/ WALL MTD HINGES
2. ALL GLAZING IS 3/8" TH
3. ALL HARDWARE IS POLISHED BRIGHT CHROME
4. DOOR HANDLE IS 12" L ON EACH SIDE OF GLAZING
5. ALL GLAZING IS FROSTED/OBSCURED

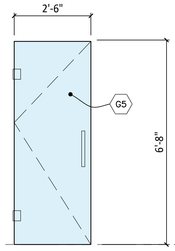

GLASS SHOWER DOOR,
TEMPERED GLASS &
FIXED PANEL

G DOOR
INTERIOR

NOTES:

1. DESIGN BASIS IS INTERIOR WOOD DOOR MANUF BY ???
2. WOOD SPECIES FOR PAINTED FINISH - POPLAR
3. WOOD SPECIES FOR STAINED FINISH - WHITE OAK

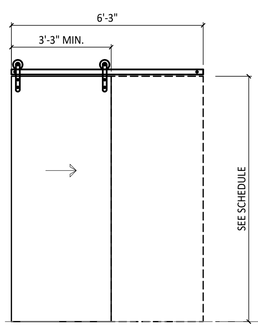

OPERABLE BARN DOOR

H DOOR
INTERIOR

NOTES:

1. ADJOINING ROOM DOOR, HANDLE LOCATED ON EXTERIOR FACE OF DOOR ONLY, RATED DOOR
2. RATED 45 MIN

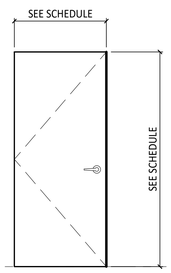

1-3/4" TH.,
WOOD DOOR

J DOOR TYPE
INTERIOR

NOTES:

1. DESIGN BASIS FOR DOOR: MANUF BY CECO DOORS
2. RATED 60 MIN

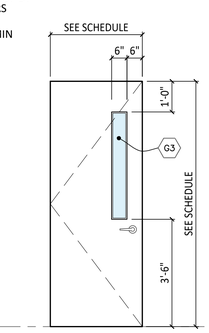

1-3/4" TH.,
WOOD DOOR

K DOOR TYPE
INTERIOR

NOTES:

1. DESIGN BASIS FOR DOOR: MANUF BY
2. NO MUNTINS
3. TEMPERED GLAZING

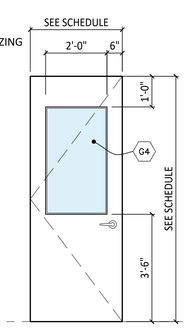

1-3/4" TH.,
WOOD DOOR

L DOOR TYPE
INTERIOR

A1	DOOR ELEVATIONS (INTERIOR)
A811	1/2" = 1'-0"

KUO DIEDRICH CHI
730 PEACHTREE STREET, NE
STUDIO 325
ATLANTA, GEORGIA 30308
678.244.6270
www.KDCarchitects.com

ARCHITECT:

ARCH. REG: AR91344

CONSULTANT:

REVISIONS

DATE:	DESCRIPTION:
10/18/24	SCHEMATIC DESIGN
6/5/25	DESIGN DEVELOPMENT
10/23/25	50% CONSTRUCTION DOCS
11/14/25	PERMIT SET

PROJECT:

SERENITY SEASIDE RESORT

BUILDING #1

THE INN

186 SOUTH BAY SHORE DRIVE, EASTPOINT, FL 32328

Serenity Seaside Operations, LLC
174 Watercolor Way, PMB 410
Santa Rosa Beach, Florida 32459

JOB NUMBER: 23019.1

DATE: --/--/----

TITLE: DOOR ELEVATIONS - INTERIOR

SHEET: A811

K:\Projects\23\23019\DWGs\Serenity_Bldg-1_Inn\Sheets\23019.1-A811.dwg Plotted: Nov 13, 2025 - 6:30pm by ColebLawrence

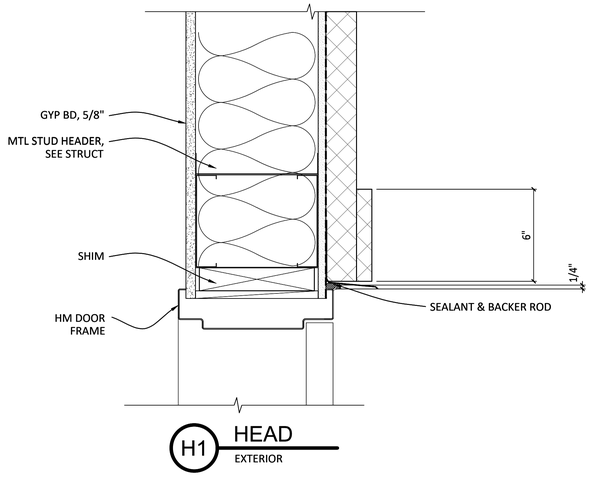

H1 HEAD EXTERIOR

E1	DOOR HEAD DETAIL @ HM FRAME / EIFS
A821	3" = 1'-0"

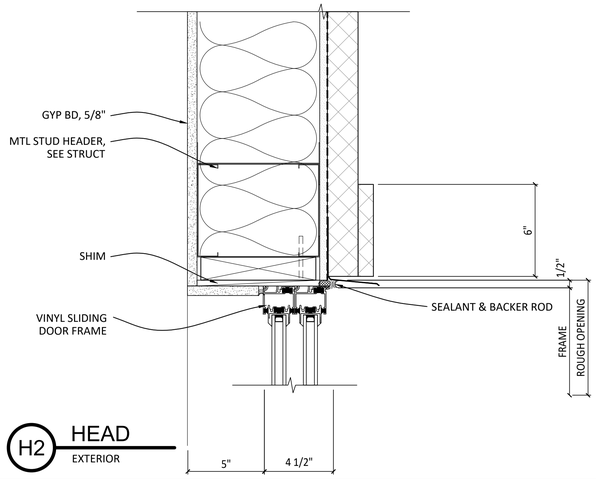

H2 HEAD EXTERIOR

E2	DOOR HEAD DETAIL @ SLIDING / EIFS
A821	3" = 1'-0"

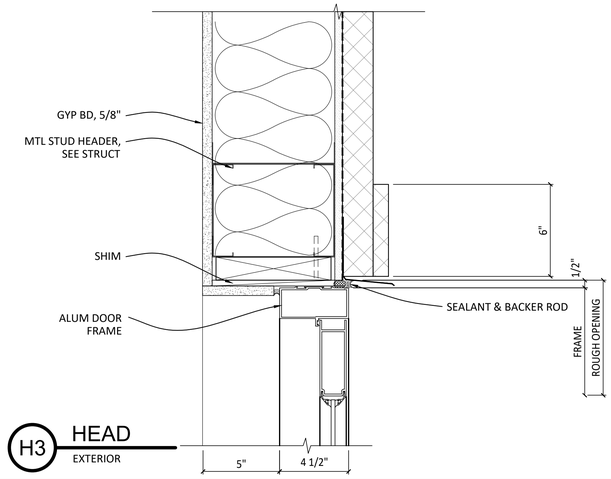

H3 HEAD EXTERIOR

E4	DOOR HEAD DETAIL - ALUM FRAME / EIFS
A821	3" = 1'-0"

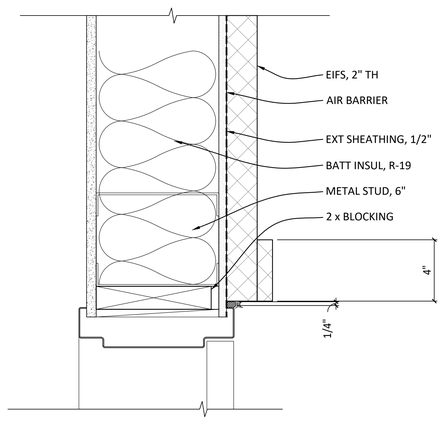

J1 JAMB EXTERIOR

C1	DOOR JAMB DETAIL @ HM FRAME / EIFS
A821	3" = 1'-0"

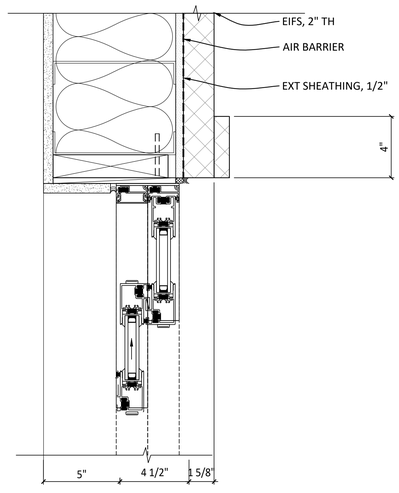

J2 JAMB EXTERIOR

C2	DOOR JAMB DETAIL @ SLIDING / EIFS
A821	3" = 1'-0"

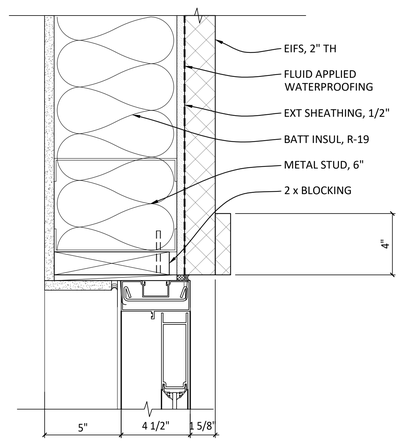

J3 JAMB EXTERIOR

C4	DOOR JAMB DETAIL - ALUM FRAME / EIFS
A821	3" = 1'-0"

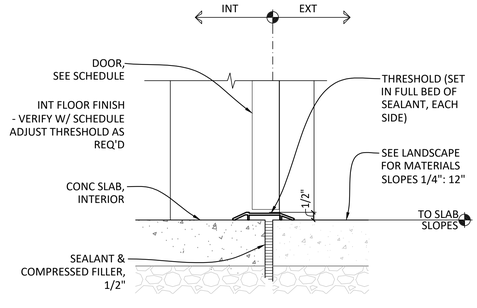

NOTE:
SLOPE EXTERIOR PAVEMENT UP TO FIN FLR (1/2" RISE WITH 16" MIN RUN) BEVEL SIDES WHERE EXPOSED MAX 1:12 SLOPE

T1 THRESHOLD EXTERIOR

A1	DOOR THRESHOLD DETAIL
A821	3" = 1'-0"

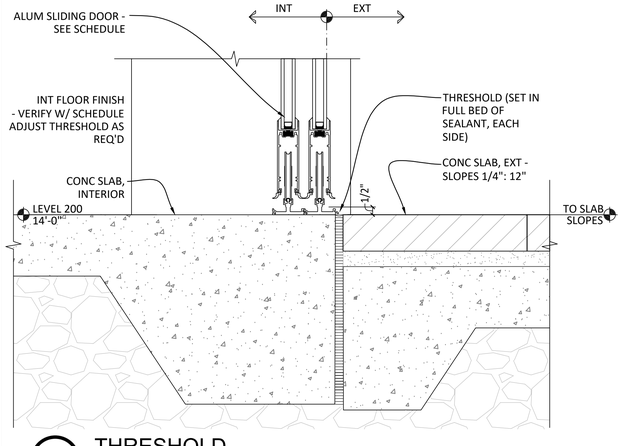

T2 THRESHOLD EXTERIOR

A2	SLIDING DOOR THRESHOLD DETAIL @ EIFS
A821	3" = 1'-0"

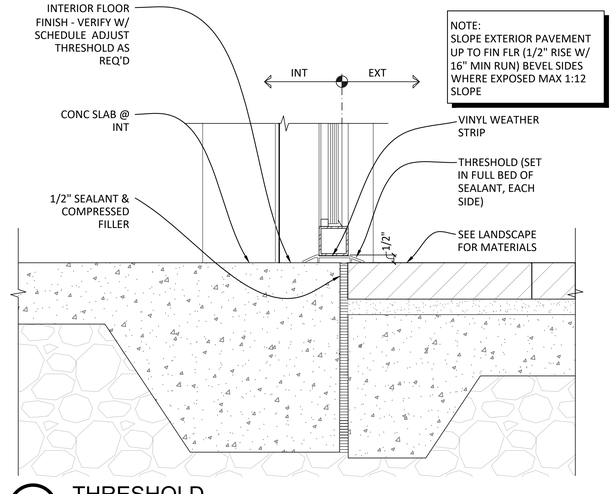

T3 THRESHOLD EXTERIOR

A4	DOOR THRESHOLD DETAIL
A821	3" = 1'-0"

SHEET NOTES / LEGEND

1. -

GENERAL NOTES

A. -

KUO DIEDRICH CHI
730 PEACHTREE STREET, NE
STUDIO 325
ATLANTA, GEORGIA 30308
678.244.6270
www.KDCarchitects.com

ARCHITECT:

ARCH. REG: AR91344

CONSULTANT:

REVISIONS

DATE:	DESCRIPTION:
10/18/24	SCHEMATIC DESIGN
6/5/25	DESIGN DEVELOPMENT
10/23/25	50% CONSTRUCTION DOCS
11/14/25	PERMIT SET

PROJECT:

SERENITY SEASIDE RESORT

BUILDING #1

THE INN

186 SOUTH BAY SHORE DRIVE, EASTPOINT, FL 32328

Serenity Seaside Operations, LLC
174 Watercolor Way, PMB 410
Santa Rosa Beach, Florida 32459

JOB NUMBER: 23019.1

DATE: --/--/----

TITLE: DOOR DETAILS @ EXTERIOR

SHEET: A821

K:\Projects\23\23019\DWGs\Serenity_Bldg-1_Inn\Sheets\23019.1-A821.dwg Plotted: Nov. 13, 2025 - 6:30pm by ColebLawrence

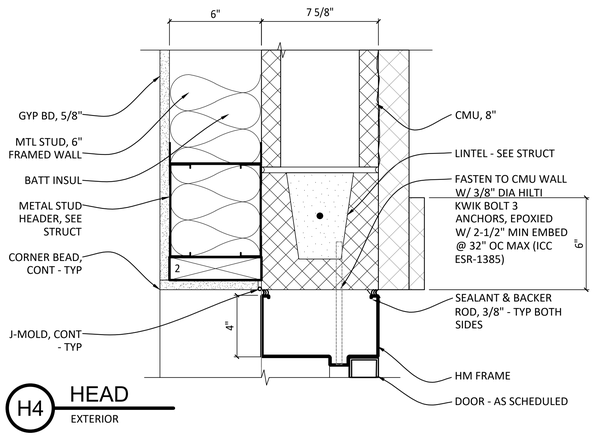

H4 HEAD
EXTERIOR

D1	DOOR HEAD DETAIL @ HM FRAME / EIFS
A822	3" = 1'-0"

J4 JAMB
EXTERIOR

C1	DOOR JAMB DETAIL @ HM FRAME / EIFS
A822	3" = 1'-0"

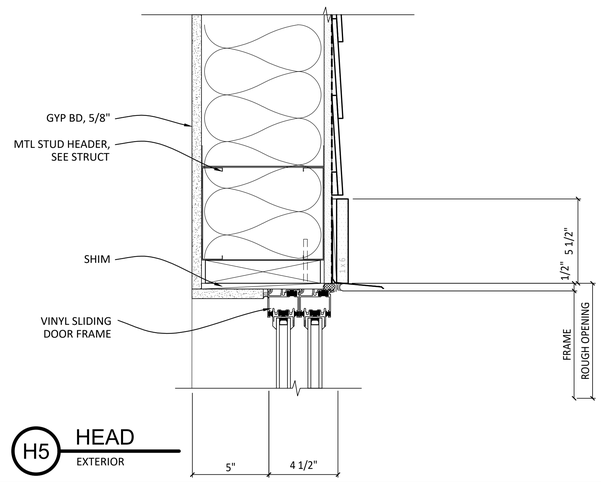

H5 HEAD
EXTERIOR

E3	DOOR HEAD DETAIL - SLIDING / SIDING
A822	3" = 1'-0"

J5 JAMB
EXTERIOR

C3	DOOR JAMB DETAIL - SLIDING / SIDING
A822	3" = 1'-0"

T5 THRESHOLD
EXTERIOR

A3	SLIDING DOOR THRESHOLD DETAIL @ SIDING
A822	3" = 1'-0"

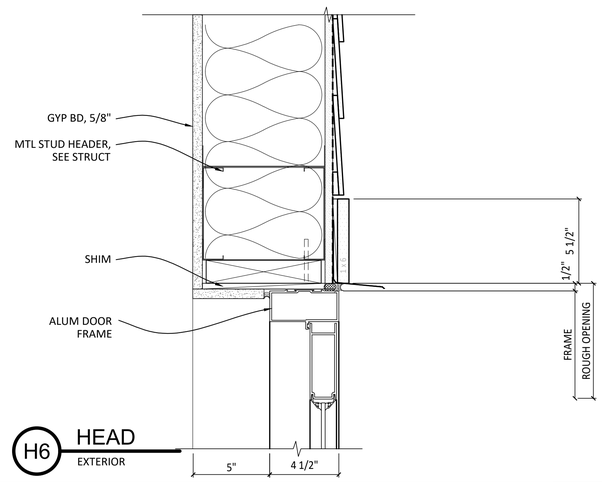

H6 HEAD
EXTERIOR

E5	DOOR HEAD DETAIL - ALUM FRAME / SIDING
A822	3" = 1'-0"

J6 JAMB
EXTERIOR

C5	DOOR JAMB DETAIL - ALUM FRAME / SIDING
A822	3" = 1'-0"

T6 THRESHOLD
EXTERIOR

A3	SLIDING DOOR THRESHOLD DETAIL @ EIFS
A822	3" = 1'-0"

SHEET NOTES / LEGEND

1. -

GENERAL NOTES

A. -

KUO DIEDRICH CHI

730 PEACHTREE STREET, NE
STUDIO 325
ATLANTA, GEORGIA 30308
678.244.6270

www.KDCarchitects.com

ARCHITECT:

ARCH. REG: AR91344

CONSULTANT:

REVISIONS

DATE:	DESCRIPTION:
10/18/24	SCHEMATIC DESIGN
6/5/25	DESIGN DEVELOPMENT
10/23/25	50% CONSTRUCTION DOCS
11/14/25	PERMIT SET

PROJECT:

SERENITY SEASIDE RESORT

BUILDING #1

THE INN

186 SOUTH BAY SHORE DRIVE, EASTPOINT, FL 32328

Serenity Seaside Operations, LLC
174 Watercolor Way, PMB 410
Santa Rosa Beach, Florida 32459

JOB NUMBER: 23019.1

DATE: --/--/----

TITLE: DOOR DETAILS @ EXTERIOR

SHEET: A822

K:\Projects\23\23019\DWGs\Serenity_Bldg-1_inn\Sheets\23019.1-A822.dwg Plotted: Nov 13, 2025 - 6:30pm by ColebLawrence

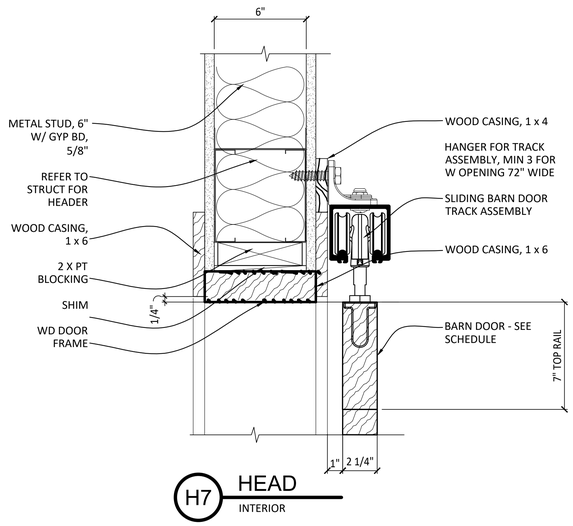

E1	HEAD DETAIL @ BARN DOOR
A823	3" = 1'-0"

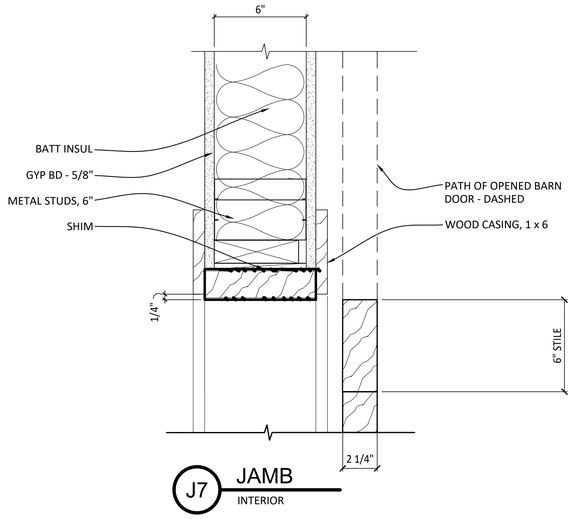

C1	JAMB DETAIL @ BARN DOOR
A823	3" = 1'-0"

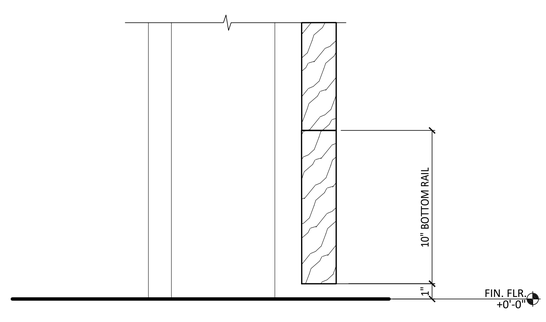

A1	THRESHOLD DETAIL @ BARN DOOR
A823	3" = 1'-0"

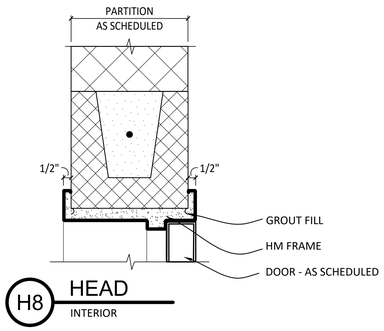

E3	DOOR HEAD DETAIL @ HM & CMU
A823	3" = 1'-0"

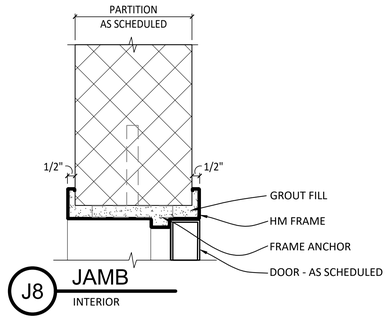

D3	DOOR JAMB DETAIL @ HM & CMU
A823	3" = 1'-0"

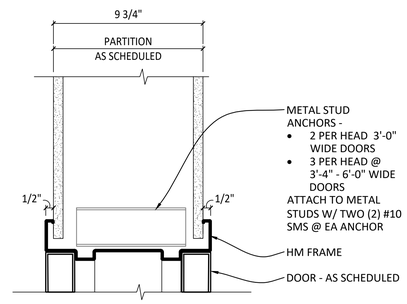

B3	DOOR HEAD DETAIL @ HM FRAME - JOINING RMS
A823	3" = 1'-0"

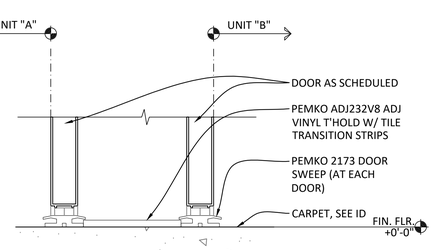

A3	DOOR T'HOLD DTL @ HM FRAME - JOINING RMS
A823	3" = 1'-0"

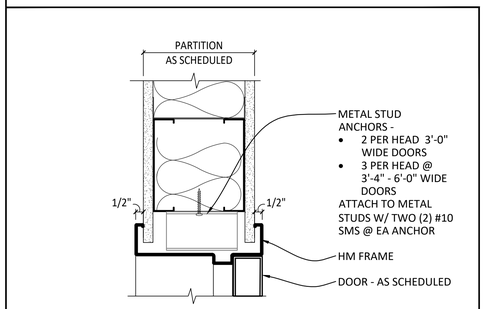

B5	DOOR HEAD DETAIL @ HM FRAME
A823	3" = 1'-0"

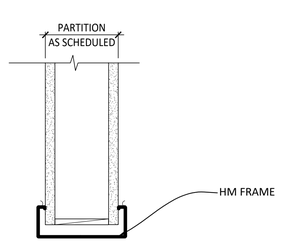

A5	CASED OPEN DTL - HEAD @ HM FR
A823	3" = 1'-0"

SHEET NOTES / LEGEND

1. -

GENERAL NOTES

A. -

KUO DIEDRICH CHI
730 PEACHTREE STREET, NE
STUDIO 325
ATLANTA, GEORGIA 30308
678.244.6270
www.KDCarchitects.com

ARCHITECT:

ARCH. REG: AR91344

CONSULTANT:

REVISIONS

DATE:	DESCRIPTION:
10/18/24	SCHEMATIC DESIGN
6/5/25	DESIGN DEVELOPMENT
10/23/25	50% CONSTRUCTION DOCS
11/14/25	PERMIT SET

PROJECT:

SERENITY SEASIDE RESORT

BUILDING #1

THE INN

186 SOUTH BAY SHORE DRIVE, EASTPOINT, FL 32328

Serenity Seaside Operations, LLC
174 Watercolor Way, PMB 410
Santa Rosa Beach, Florida 32459

JOB NUMBER: 23019.1

DATE: --/--/----

TITLE: DOOR DETAILS @ INTERIOR

SHEET: A823

K:\Projects\23\23019\DWGs\Serenity_Bldg-1_Inn\Sheets\23019.1-A823.dwg Plotted: Nov 13, 2025 - 6:30pm by ColebLawrence

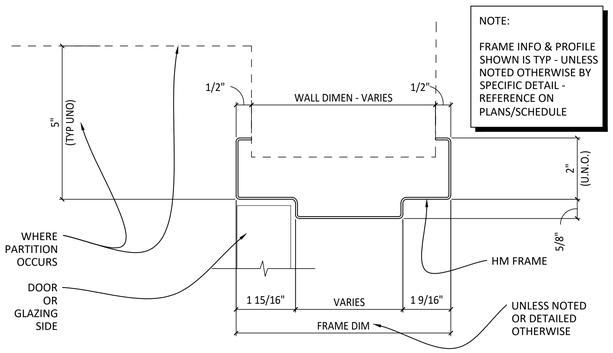

E2 HM FRAME PLAN DETAIL

A824 | 6" = 1'-0"

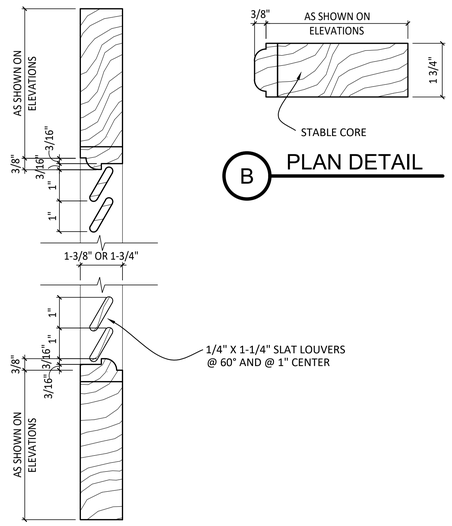

B PLAN DETAIL

A SECTION @ LOUVER

C2 DETAILS @ LOUVERED WOOD DOORS

A824 | 6" = 1'-0"

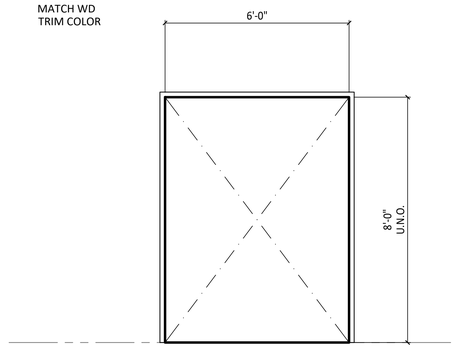

C02 CASED OPENING
INTERIOR

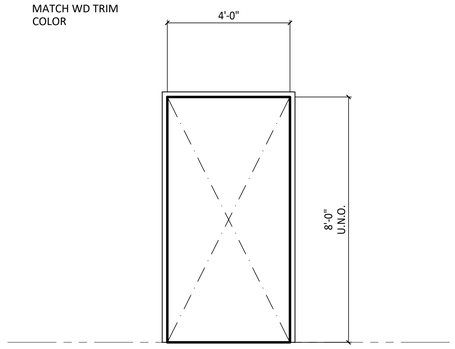

C01 CASED OPENING
INTERIOR

A1 CASED OPENING ELEVS (INTERIOR)

A824 | 1/2" = 1'-0"

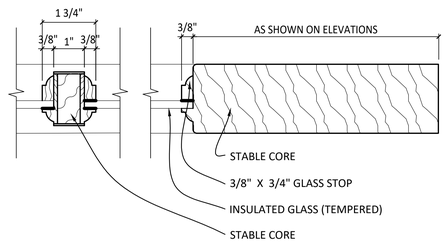

B SECTION @ GLASS

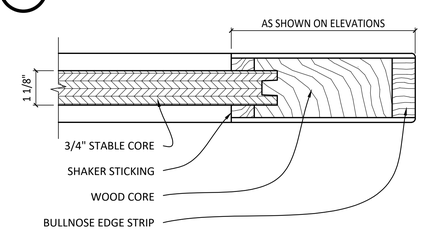

A SECTION @ SHAKER PANEL

A2 PLAN DETAILS @ PANELED WOOD DOORS

A824 | 6" = 1'-0"

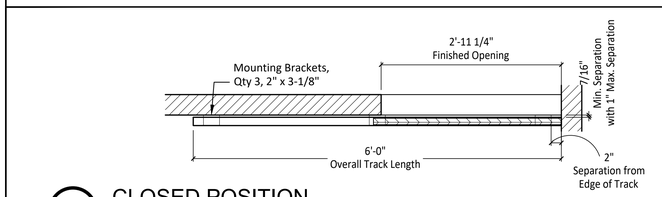

B CLOSED POSITION
INTERIOR BARN DOOR

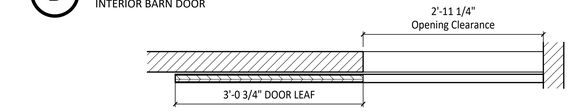

A OPEN POSITION
INTERIOR BARN DOOR

E4 PLAN DETAILS @ OPERABLE BARN DOOR - INT

A824 | 1" = 1'-0"

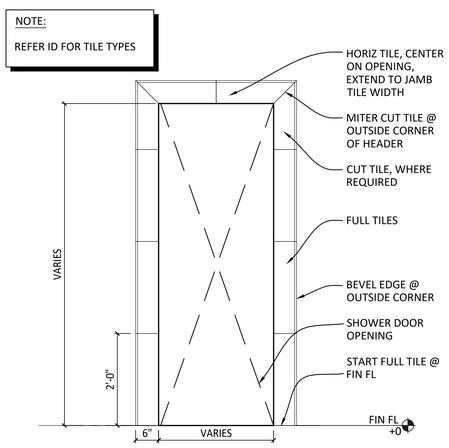

B CASED OPENING @ SHWR DRS

A4 ELEV @ BASED OPENING - TILE

A824 | 3/4" = 1'-0"

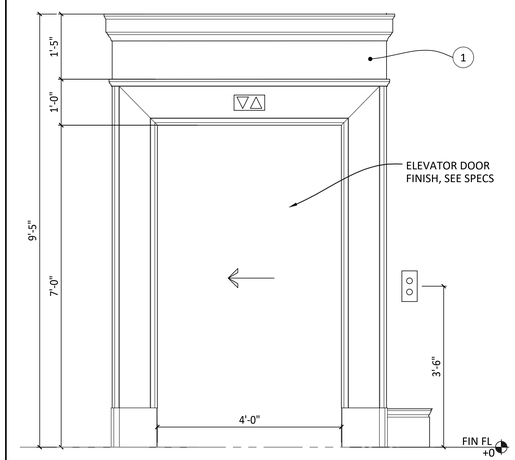

A ELEVATOR DOOR OPENING

C5 ELEV @ ELEVATOR DOOR OPENING

A824 | 3/4" = 1'-0"

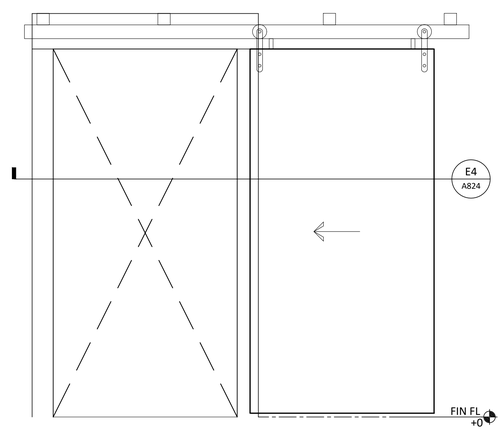

C CASED OPENING @ BARN DOOR

A6 ELEV @ BARN DOOR OPENING

A824 | 3/4" = 1'-0"

SHEET NOTES / LEGEND

1. ONLY PROVIDE WD TRIM @ 2 PUBLIC ELEVATORS ON LVL 100

GENERAL NOTES

A. -

KUO DIEDRICH CHI
730 PEACHTREE STREET, NE
STUDIO 325
ATLANTA, GEORGIA 30308
678.244.6270
www.KDCarchitects.com

ARCHITECT:

ARCH. REG: AR91344

CONSULTANT:

REVISIONS

DATE:	DESCRIPTION:
10/18/24	SCHEMATIC DESIGN
6/5/25	DESIGN DEVELOPMENT
10/23/25	50% CONSTRUCTION DOCS
11/14/25	PERMIT SET

PROJECT:

SERENITY SEASIDE RESORT

BUILDING #1

THE INN

186 SOUTH BAY SHORE DRIVE, EASTPOINT, FL 32328

Serenity Seaside Operations, LLC
174 Watercolor Way, PMB 410
Santa Rosa Beach, Florida 32459

JOB NUMBER: 23019.1

DATE: --/--/----

TITLE: DOOR DETAILS @ INTERIOR

SHEET: A824

K:\Projects\23\23019\DWGs\Serenity_Bldg-1_Inn\Sheets\23019.1-A824.dwg Plotted: Nov 13, 2025 - 6:31pm by CotebLawrence

NOTE:

EXTERIOR ROUGH OPENING
12K UNIT: W = 28 1/8" H = 32 1/4"

NOTE:

EXTERIOR ROUGH OPENING
24K UNIT: W = 28 1/8" H = 42 1/4"

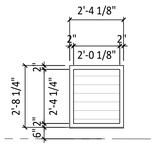

L1 LOUVER
ALUM: 12K UNIT

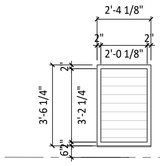

L2 LOUVER
ALUM: 24K UNIT

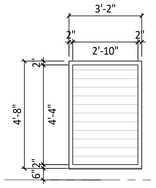

L3 LOUVER
ALUM: LAUNDRY

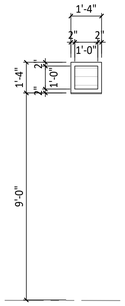

L4 LOUVER
ALUM: TOILET EXHAUST

FIN FL +0

E1 LOUVER ELEVATIONS
A831 3/8" = 1'-0"

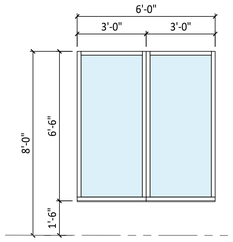

11 STOREFRONT
ALUM

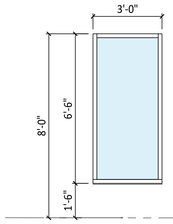

12 STOREFRONT
ALUM

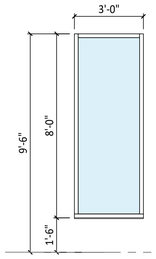

13 STOREFRONT
ALUM

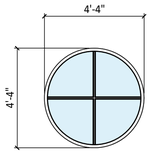

14 STOREFRONT
ALUM

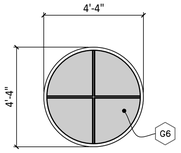

15 SPANDREL
ALUM

FIN FL +0

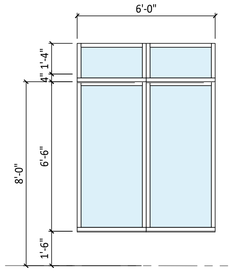

6 STOREFRONT
ALUM

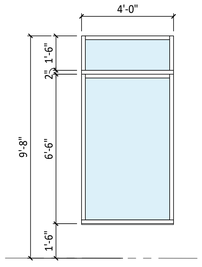

7 STOREFRONT
ALUM

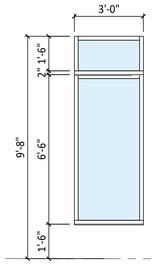

8 STOREFRONT
ALUM

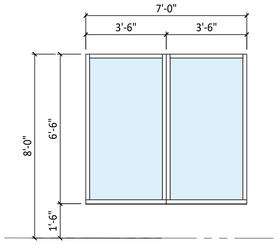

9 STOREFRONT
ALUM

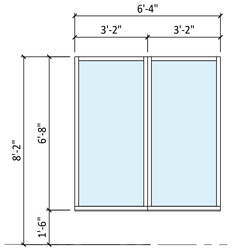

10 STOREFRONT
ALUM

FIN FL +0

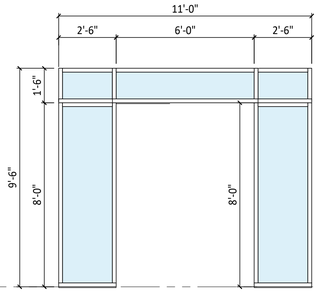

1 STOREFRONT
ALUM

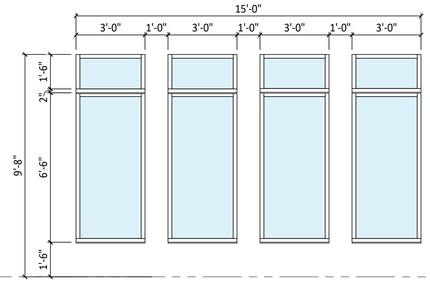

2 STOREFRONT
ALUM

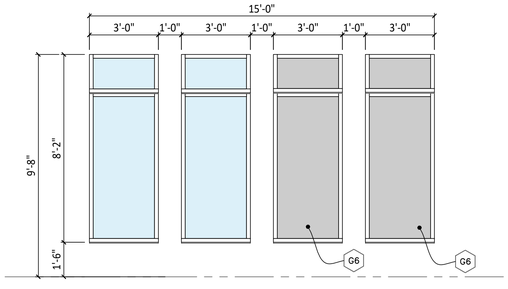

3 STOREFRONT/SPANDREL
ALUM

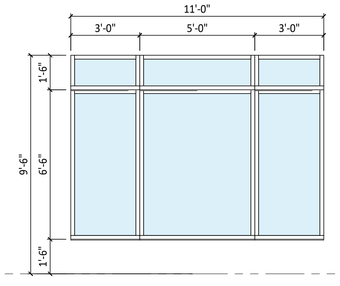

4 STOREFRONT
ALUM

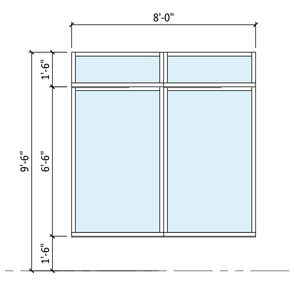

5 STOREFRONT
ALUM

FIN FL +0

A1 WINDOW ELEVATIONS (EXTERIOR)
A831 3/8" = 1'-0"

SHEET NOTES / LEGEND

1. ALL GLAZING IS TYPE "G1" U.N.O.

GENERAL NOTES

A. -

KUO DIEDRICH CHI

730 PEACHTREE STREET, NE
STUDIO 325
ATLANTA, GEORGIA 30308
678.244.6270

www.KDCarchitects.com

ARCHITECT:

ARCH. REG: AR91344

CONSULTANT:

REVISIONS

DATE:	DESCRIPTION:
10/18/24	SCHEMATIC DESIGN
6/5/25	DESIGN DEVELOPMENT
10/23/25	50% CONSTRUCTION DOCS
11/14/25	PERMIT SET

PROJECT:

SERENITY SEASIDE RESORT

BUILDING #1

THE INN

186 SOUTH BAY SHORE DRIVE, EASTPOINT, FL 32328

Serenity Seaside Operations, LLC
174 Watercolor Way, PMB 410
Santa Rosa Beach, Florida 32459

JOB NUMBER: 23019.1

DATE: --/--/----

TITLE: WINDOW & CASED OPENING ELEVATIONS

SHEET: A831

K:\Projects\23\23019\DWGs\Serenity_Bldg-1_Inn\Sheets\23019.1-A831.dwg Plotted: Nov 13, 2025 - 6:31pm by ColebLawrence

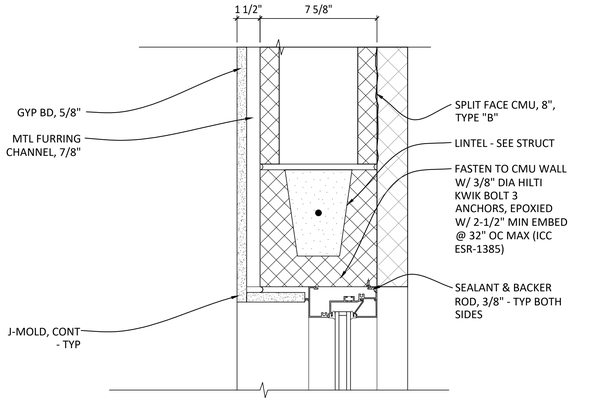

E1	WINDOW HEAD DETAIL @ ALUM (EIFS ON CMU)
A841	3" = 1'-0"

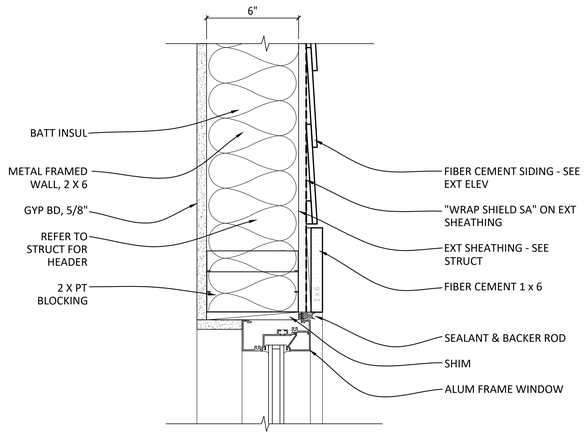

E3	WINDOW HEAD DTL - SIDING
A841	3" = 1'-0"

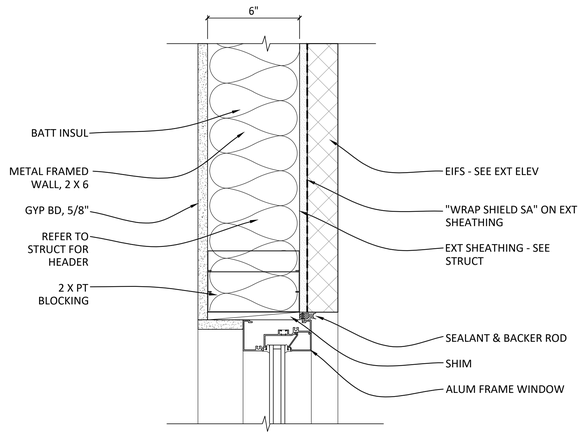

E5	WINDOW HEAD DTL - EIFS
A841	3" = 1'-0"

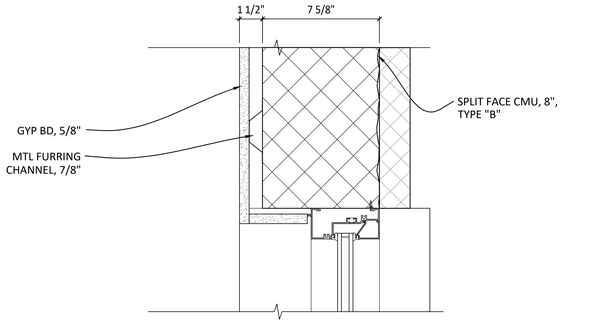

C1	WINDOW JAMB DETAIL @ ALUM (EIFS ON CMU)
A841	3" = 1'-0"

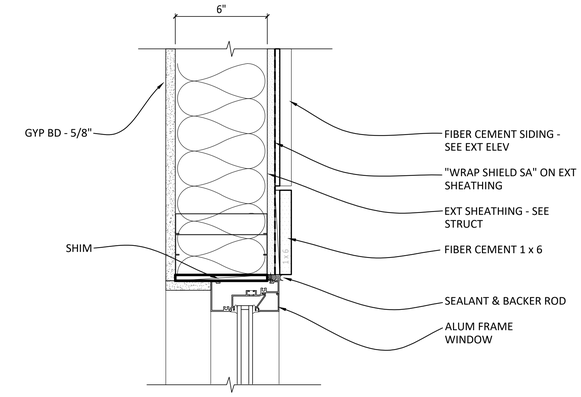

C3	WINDOW JAMB DTL - SIDING
A841	3" = 1'-0"

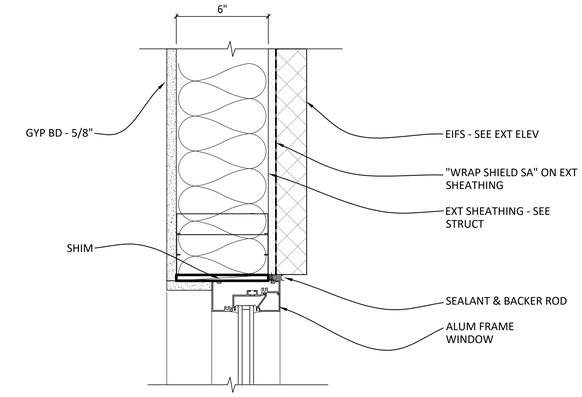

C5	WINDOW JAMB DTL - EIFS
A841	3" = 1'-0"

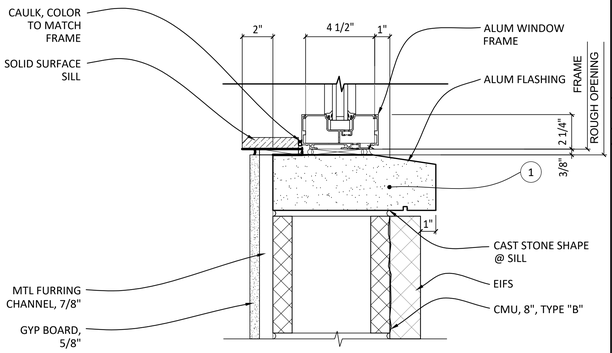

B1	WINDOW SILL DETAIL @ ALUM (EIFS ON CMU)
A841	3" = 1'-0"

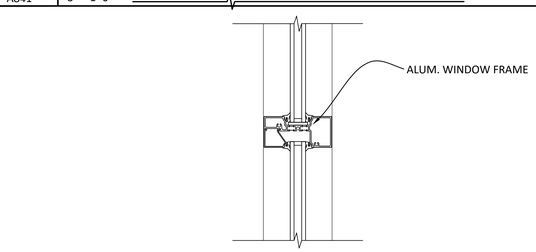

A1	WINDOW DETAIL - ALUM
A841	3" = 1'-0"

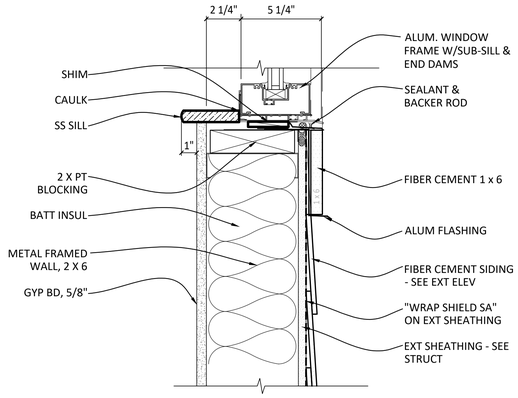

A3	WINDOW SILL DTL - SIDING
A841	3" = 1'-0"

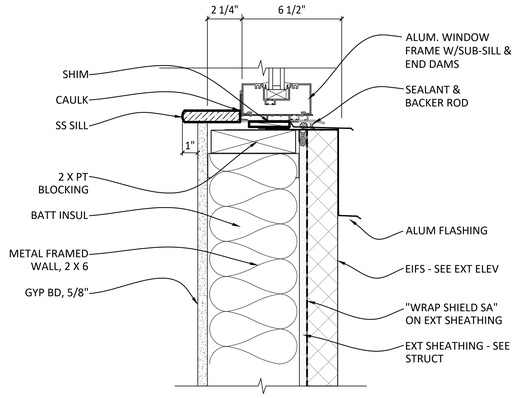

A5	WINDOW SILL DTL - EIFS
A841	3" = 1'-0"

SHEET NOTES / LEGEND

1. CAST STONE SHAPE, A1/A651

GENERAL NOTES

A. AT ALL EXTERIOR WINDOW OPENINGS PROVIDE DETAIL A1/A841

KUO DIEDRICH CHI
730 PEACHTREE STREET, NE
STUDIO 325
ATLANTA, GEORGIA 30308
678.244.6270
www.KDCarchitects.com

ARCHITECT:
ARCH. REG: AR91344

CONSULTANT:

REVISIONS

DATE:	DESCRIPTION:
10/18/24	SCHEMATIC DESIGN
6/5/25	DESIGN DEVELOPMENT
10/23/25	50% CONSTRUCTION DOCS
11/14/25	PERMIT SET

PROJECT:
SERENITY SEASIDE RESORT
BUILDING #1
THE INN
186 SOUTH BAY SHORE DRIVE, EASTPOINT, FL 32328

Serenity Seaside Operations, LLC
174 Watercolor Way, PMB 410
Santa Rosa Beach, Florida 32459

JOB NUMBER: 23019.1
DATE: --/--/----
TITLE: WINDOW DETAILS - EXTERIOR
SHEET: A841

K:\Projects\23\23019\DWGs\Serenity_Bldg-1_Inn\Sheets\23019.1-A841.dwg Plotted: Nov 13, 2025 – 6:31pm by ColebLawrence

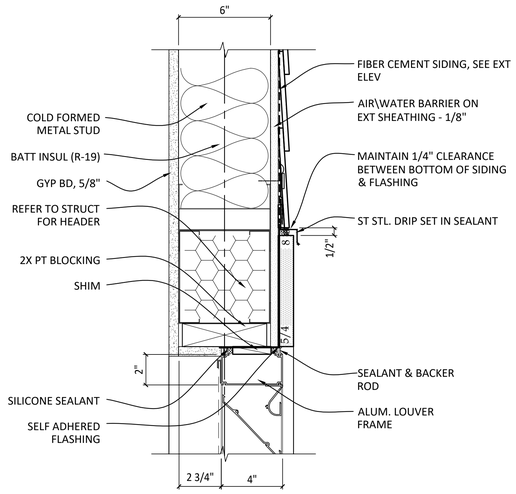

C2	LOUVER HEAD DETAIL @ ALUM FRAME (SIDING)
A842	3" = 1'-0"

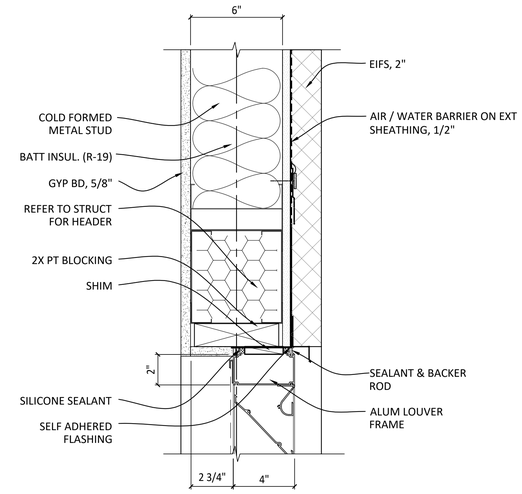

C4	LOUVER HEAD DETAIL @ ALUM FRAME (EIFS)
A842	3" = 1'-0"

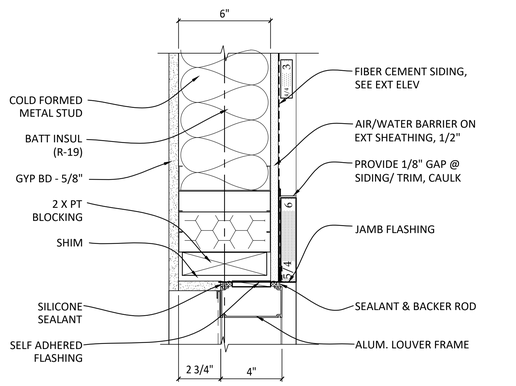

C2	LOUVER JAMB DETAIL @ ALUM FRAME (SIDING)
A842	3" = 1'-0"

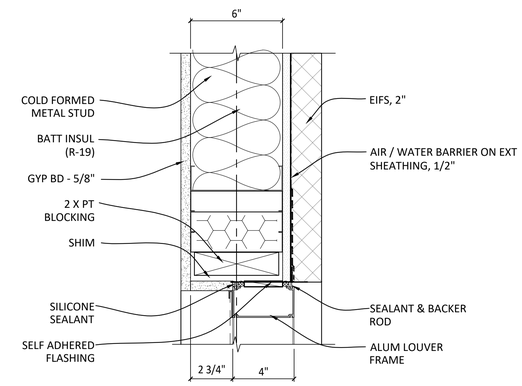

C4	LOUVER JAMB DETAIL @ ALUM FRAME (EIFS)
A842	3" = 1'-0"

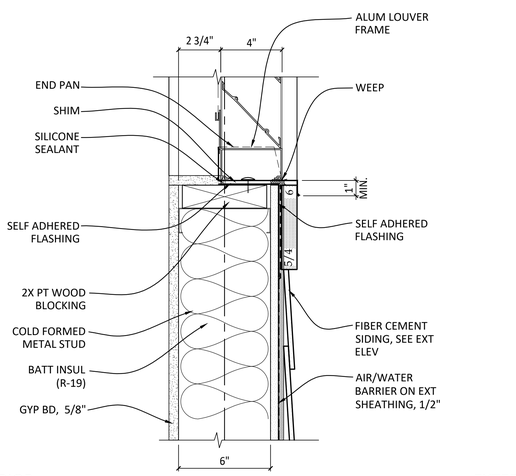

A2	LOUVER SILL DETAIL @ ALUM FRAME (SIDING)
A842	3" = 1'-0"

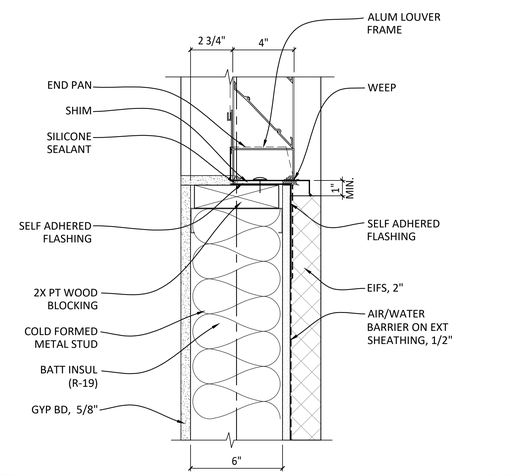

A4	LOUVER SILL DETAIL @ ALUM FRAME (EIFS)
A842	3" = 1'-0"

GENERAL NOTES

A. -

SHEET NOTES / LEGEND

1. -

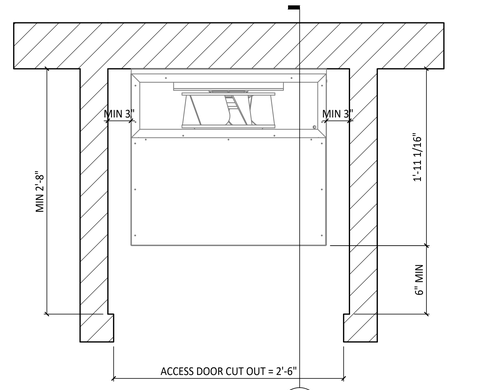

C PLAN DETAIL

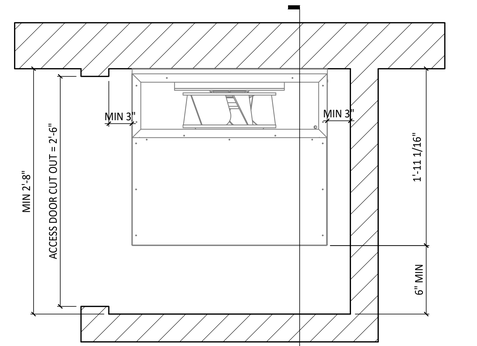

B PLAN DETAIL

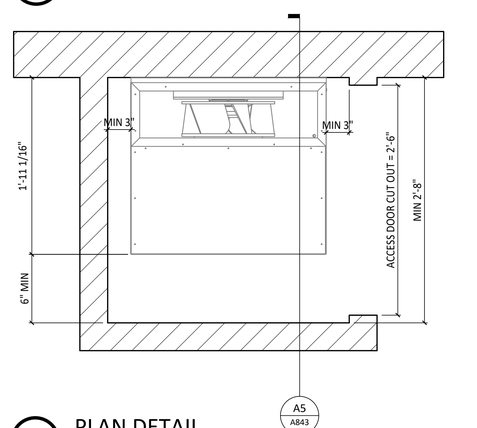

A PLAN DETAIL

A6	PLAN DETAILS @ VTAC
A842	1-1/2" = 1'-0"

KUO DIEDRICH CHI
730 PEACHTREE STREET, NE
STUDIO 325
ATLANTA, GEORGIA 30308
678.244.6270
www.KDCarchitects.com

ARCHITECT:

ARCH. REG: AR91344

CONSULTANT:

REVISIONS

DATE:	DESCRIPTION:
10/18/24	SCHEMATIC DESIGN
6/5/25	DESIGN DEVELOPMENT
10/23/25	50% CONSTRUCTION DOCS
11/14/25	PERMIT SET

PROJECT:

SERENITY SEASIDE RESORT

BUILDING #1

THE INN

186 SOUTH BAY SHORE DRIVE, EASTPOINT, FL 32328

Serenity Seaside Operations, LLC
174 Watercolor Way, PMB 410
Santa Rosa Beach, Florida 32459

JOB NUMBER: 23019.1

DATE: --/--/----

TITLE: LOUVER DETAILS @ EXTERIOR

SHEET: A842

K:\Projects\23\23019\DWGs\Serenity_Bldg-1_inn\Sheets\23019.1-A842.dwg Plotted: Nov 13, 2025 - 6:31pm by ColebLawrence

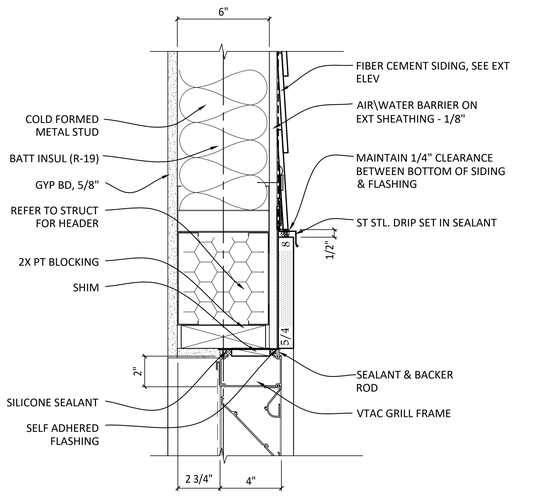

E1	VTAC HEAD DETAIL @ SIDING
A843	3" = 1'-0"

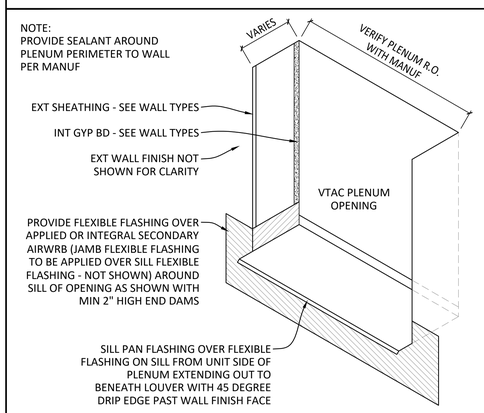

E3	ISOMETRIC DETAIL @ VTAC SILL PAN
A843	1-1/2" = 1'-0"

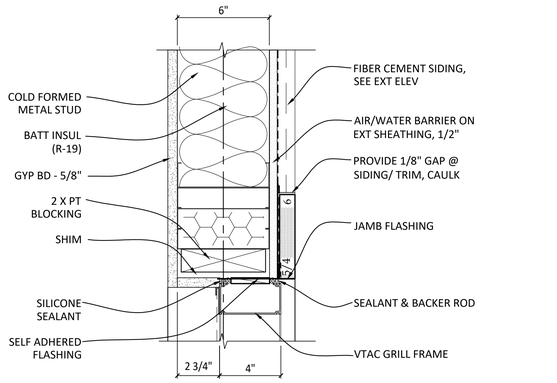

C1	VTAC JAMB DETAIL @ SIDING
A843	3" = 1'-0"

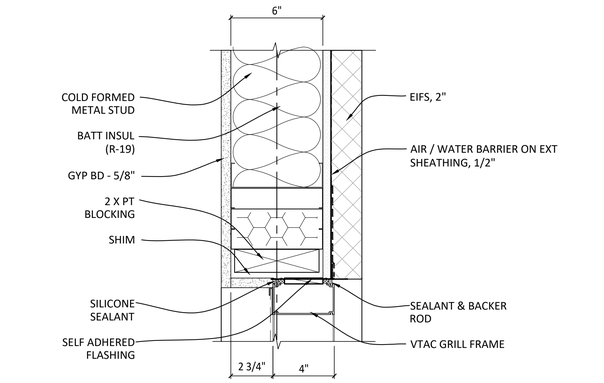

C3	VTAC JAMB DETAIL @ GRILLE (EIFS)
A843	3" = 1'-0"

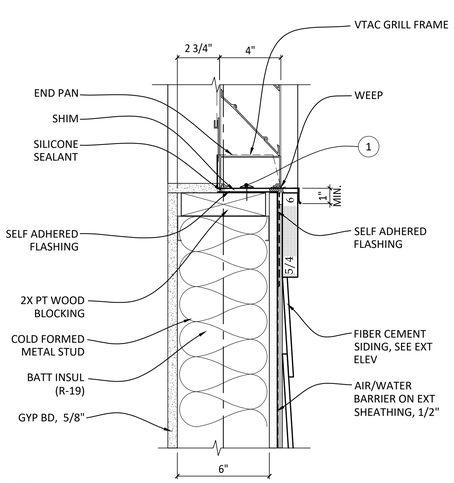

A1	VTAC SILL DETAIL @ SIDING
A843	3" = 1'-0"

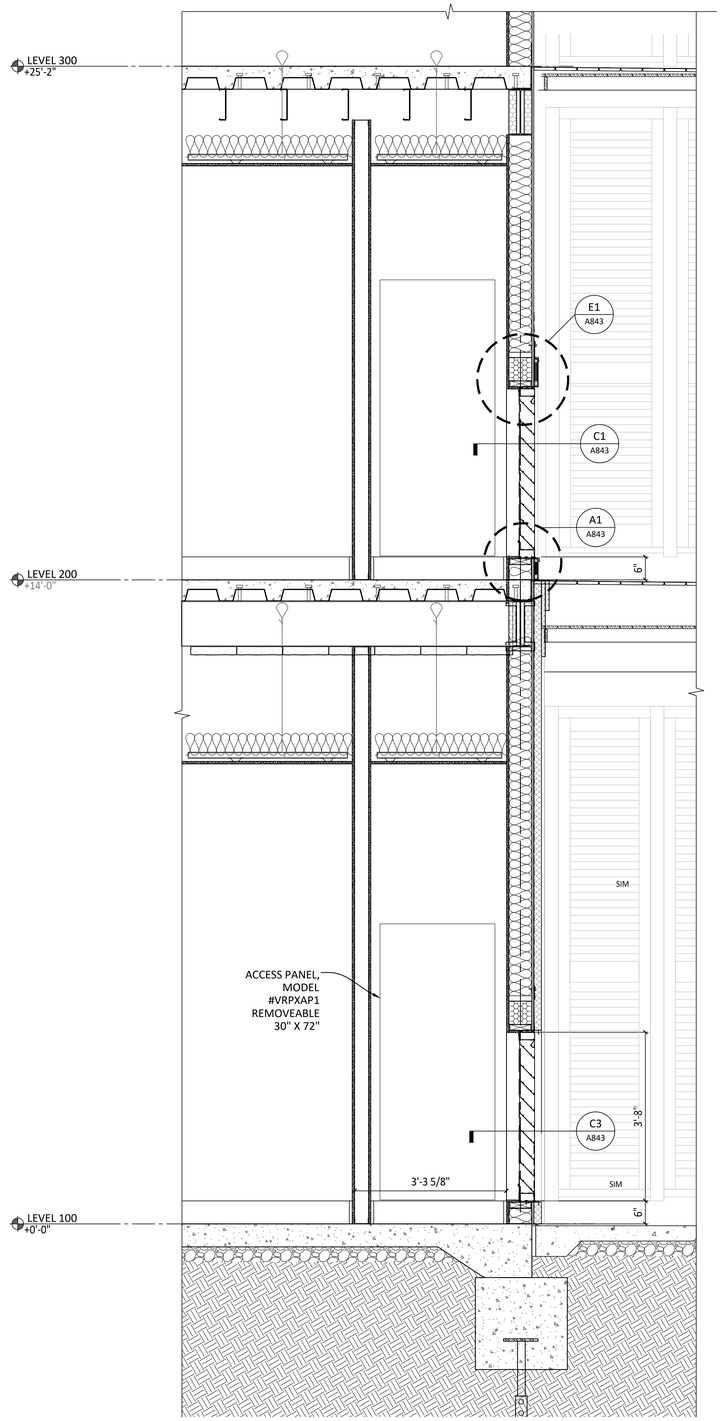

A5	SECTION @ VTAC LOUVER / EXTERIOR WALL (EIFS & SIDING)
A843	3/4" = 1'-0"

GENERAL NOTES

A. -

SHEET NOTES / LEGEND

1. SILL PLAN, SEE E3/A843

KUO DIEDRICH CHI
730 PEACHTREE STREET, NE
STUDIO 325
ATLANTA, GEORGIA 30308
678.244.6270
www.KDCarchitects.com

ARCHITECT:

ARCH. REG: AR91344

CONSULTANT:

REVISIONS

DATE:	DESCRIPTION:
10/18/24	SCHEMATIC DESIGN
6/5/25	DESIGN DEVELOPMENT
10/23/25	50% CONSTRUCTION DOCS
11/14/25	PERMIT SET

PROJECT:

SERENITY SEASIDE RESORT

BUILDING #1

THE INN

186 SOUTH BAY SHORE DRIVE, EASTPOINT, FL 32328

Serenity Seaside Operations, LLC
174 Watercolor Way, PMB 410
Santa Rosa Beach, Florida 32459

JOB NUMBER: 23019.1

DATE: --/--/----

TITLE: VTAC DETAILS @ EXT WALL

SHEET: A843

K:\Projects\23\23019\DWGs\Serenity_Bldg-1_Inn\Sheets\23019.1-A843.dwg Plotted: Nov 13, 2025 - 6:32pm by CalebLawrence

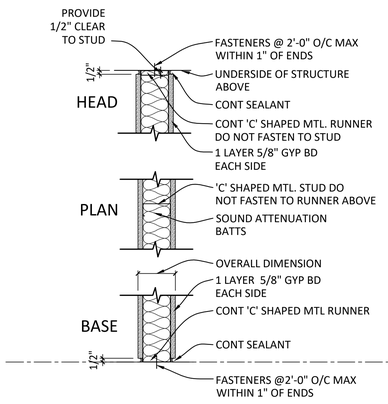

TYPE	STUD SIZE	METAL THK	STUD SPACING	GYP BD THK / TYPE	ATTEN. THICK	FIRE RATING	TESTED ASSEMBLY NUMBER	STC RATING
B	3-5/8"	SPEC.	24" O.C.	5/8" X	3-5/8"	1 HR	U423	52
B1	6"	SPEC.	24" O.C.	5/8" X	6"	1 HR	U423	52

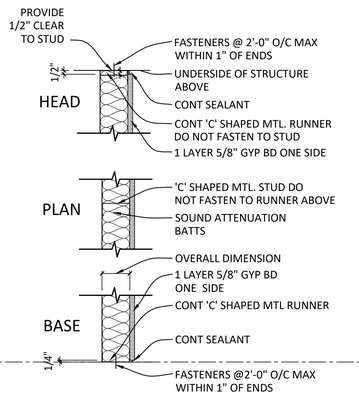

TYPE	STUD SIZE	METAL THK	STUD SPACING	GYP BD THK / TYPE	ATTEN THK	FIRE RATING	TESTED ASSEMBLY NUMBER	STC RATING
C	3-5/8"	SPEC.	16" O.C.	5/8"	3-5/8"	1 HR	U423	--
C1	6"	SPEC.	16" O.C.	5/8"	6"	1 HR	U423	--

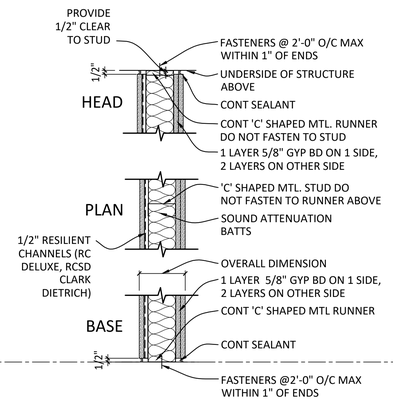

TYPE	STUD SIZE	METAL THK	STUD SPACING	GYP BD THK / TYPE	ATTEN. THICK	FIRE RATING	TESTED ASSEMBLY NUMBER	STC RATING
D	3-5/8"	SPEC.	24" O.C.	5/8" X	3-5/8"	1 HR	U423	58
D1	6"	SPEC.	24" O.C.	5/8" X	6"	1 HR	U423	59

NOTE:
INTERIOR DEMISING WALL AT INN

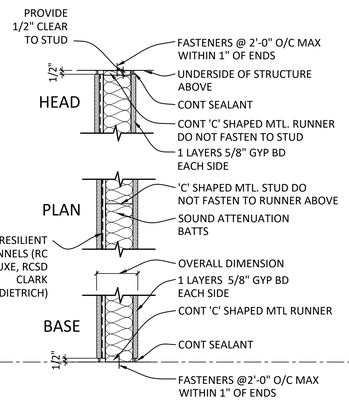

TYPE	STUD SIZE	METAL THK	STUD SPACING	GYP BD THK / TYPE	ATTEN. THICK	FIRE RATING	TESTED ASSEMBLY NUMBER	STC RATING
F	3-5/8"	SPEC.	24" O.C.	5/8" X	3-5/8"	1 HR	U423	54
F1	6"	SPEC.	24" O.C.	5/8" X	6"	1 HR	U423	55

NOTE:
INTERIOR CORRIDOR WALLS AT INN

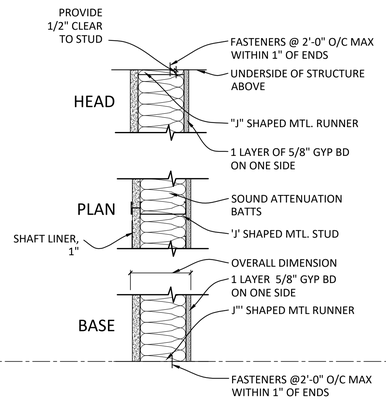

TYPE	STUD SIZE	METAL THK	STUD SPACING	GYP BD THK / TYPE	ATTEN. THICK	FIRE RATING	TESTED ASSEMBLY NUMBER	STC RATING
G	6"	SPEC.	16" O.C.	5/8" C + 1" SHAFT	6"	1 HR	U415	-

NOTE:
INTERIOR SHAFT WALL AT INN

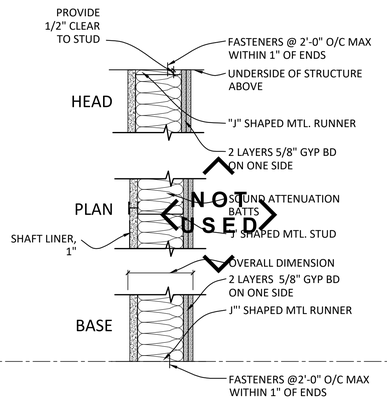

TYPE	STUD SIZE	METAL THK	STUD SPACING	GYP BD THK / TYPE	ATTEN. THICK	FIRE RATING	TESTED ASSEMBLY NUMBER	STC RATING
H	6"	SPEC.	16" O.C.	5/8" C (x2) + 1" SHAFT	6"	1 HR	U415	-

NOTE:
INTERIOR SHAFT WALL AT INN

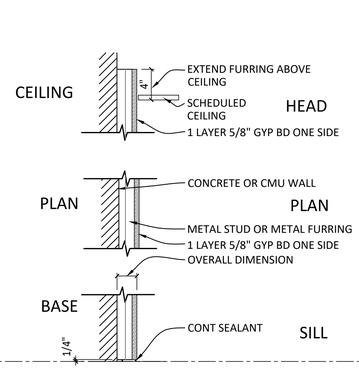

TYPE	STUD SIZE	METAL THK	STUD SPACING	GYP BD THK / TYPE	ATTEN THK	STC RATING
K	7/8"	SPEC.	16" O.C.	5/8" X	--	--
K1	1-5/8"	SPEC.	16" O.C.	5/8" X	--	--

NOTE :
SEE PLAN DETAILS & SECTIONS FOR METAL STUD FRAMED WALLS ON THIS CMU WALL

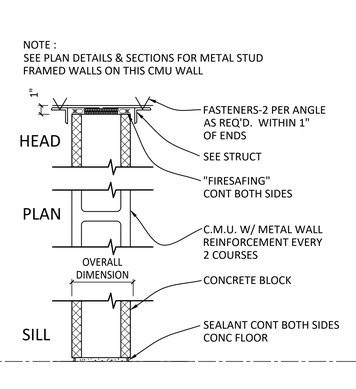

TYPE	CMU TYPE	CMU SIZE	FIRE RATING	TESTED ASSEMBLY NUMBER	STC RATING
L	--	8" X 8" X 16"	2 HR	U905	--

NOTE:
CMU = MIN 7-5/8" TH, TYPE "D-2", UL CLASSIFICATION
2-HOUR RATING

T/O SLAB

A1	INTERIOR PARTITION TYPES
A851	1-1/2" = 1'-0"

PARTITION NOTES

1. ALL INTERIOR PARTITIONS SHALL BE TYPE "A", UNLESS NOTED OTHER WISE ON FLOOR PLANS
2. METAL STUDS USED IN INTERIOR PARTITIONS & SOFFIT FRAMING ARE MIN 25 GA AT 24" O/C MAX SPACING UNLESS NOTED OTHERWISE
3. ALL PARTITIONS TERMINATE AT UNDERSIDE OF STRUCTURE ABOVE UNLESS NOTED OTHERWISE
4. PROVIDE SOUND ATTENUATION BATTS AT ALL ROOMS / SPACES (TYP)
5. PROVIDE 5/8" TILE BACKER BOARD (W/ TAPED SEAMS & CORNERS) IN LIEU OF GYP BD AT ALL TILE WAINSCOT WALLS (SEE ID FINISH SCHEDULE)
6. INTERIOR PARTITION LIMITING HEIGHT SHALL BE BASED ON CHARTS PUBLISHED BY UNIMAST, INC. UNLESS OTHER DATA BY THE APPLICABLE LIGHT GAUGE STEEL STUD MANUFACTURER IS SUBMITTED
7. INTERIOR METAL STUD PARTITIONS TO ADEQUATELY RESIST THE APPLICABLE DESIGN LOADS INCLUDING THE GRAVITY DESIGN LOADS (FOR LOAD BEARING WALLS) AND A MINIMUM HORIZONTAL DESIGN LOAD OF 5 PSF APPLIED NORMAL TO THE WALL SURFACE
8. STEEL MATERIAL FOR STUDS & TRACK FOR SHEAR WALL CONSTRUCTION SHALL HAVE A MIN. THICKNESS OF 20 GAUGE & SHALL COMPLY W/ GRADE 33 REQUIREMENTS OF EITHER ASTM A 653 SS, ASTM A792 SS, OR ASTM A 875 SS.
9. ALL PENETRATIONS IN FIRE RATED ASSEMBLIES TO BE CONSTRUCTED PER UL DESIGN CRITERIA.
10. ALL FIRE RATED ASSEMBLIES TO BE CONSTRUCTED PER SPECIFIED UL DESIGN NUMBER, OR AN APPROVED, TESTED ASSEMBLY.
11. REFER TO STRUCTURAL DRAWINGS FOR SHEAR WALL LOCATIONS & SHEATHING REQUIREMENTS.
12. WALLS & PARTITIONS WITHIN 2 FEET OF SERVICE SINKS, URINALS AND WATER CLOSETS IN PUBLIC RESTROOMS SHALL HAVE A SMOOTH, HARD, NONABSORBENT SURFACE, TO A HEIGHT OF NOT LESS THAN 4 FEET AFF & EXCEPT FOR STRUCTURAL ELEMENTS, THE MATERIALS USED IN SUCH WALLS SHALL BE OF A TYPE THAT IS NOT ADVERSELY AFFECTED BY MOISTURE.
13. GLASS MAT GYPSUM BACKING PANEL OR FIBER-CEMENT BACKER BOARD SHALL BE USED AS THE BASE FOR WALL TILE IN TUB & SHOWER AREAS AND WALL AND CEILING PANELS IN SHOWER AREAS. WATER-RESISTANT GYPSUM BACKING BOARD SHALL BE USED AS A BASE FOR TILE IN WATER CLOSET COMPARTMENTS AND MOIST AREAS.
14. COORDINATE FINAL WALL FINISH ON ALL PARTITIONS WITH ID FINISH SCHEDULE
15. PROVIDE 5/8" MOISTURE RESISTANT GYP BD ON ALL WALLS/CEILINGS ADJ TO PLUMBING FIXTURES (THAT DO NOT HAVE TILE BACKER BOARD)
16. SEE SHEET A861 FOR TOP OF WALL DETAILS
17. ALL BATHROOM WALLS SHALL HAVE SOUND ATTENUATION INSULATION.
18. IF SOUND ATTENUATION BATTS ARE INDICATED. EXTEND THE GYP BD TO THE DECK ABOVE & SEAL THE GYP BD TO THE DECK W/ ACOUSTICAL SEALANT OR FIRE RATED SEALANT AS NEEDED.

GENERAL NOTES

A. PROVIDE DOUBLE STUDS AT ALL OPENINGS IN WALLS.

B. PROVIDE JAMB ANCHOR CLIPS, FLOOR ANCHOR CLIPS AND MITERED HEAD SPLICES AT ALL H.M. DOOR AND BORROWED LIGHT FRAMES.

C. PROVIDE LINTELS OVER ALL OPENINGS, INCLUDING THOSE REQUIRED FOR DUCT WORK, PIPES, LOUVERS, GRILLES, DAMPERS, ETC.WHERE VENEER/MASONRY OCCURS.

D. GYP BD PARTITIONS WHICH EXTEND TO STRUCT SHALL BE TIGHT AGAINST BEAMS, HEADERS, JOISTS OR DECKS AND BE CAULKED W/ SEALANT. AT RATED PARTITIONS, PROVIDE U.L. LISTED SEALANTS.

E. PROVIDE GYP BD FURRING IN ROOMS W/ ROOF DRAINS, INTERIOR DOWNSPOUTS, &FIRE EXTINGUISHER CABINETS WHERE APPLICABLE.

F. WHERE GYP BD FURRING IS NOT SHOWN ON PLANS, CHECK & VERIFY LOCATIONS OF DUCTS, PIPES, & VENTS WITH MECHANICAL DRAWINGS & FURR IN SAME W/ MATERIAL TO MATCH ADJ FINISHES.

KUO DIEDRICH CHI
730 PEACHTREE STREET, NE
STUDIO 325
ATLANTA, GEORGIA 30308
678.244.6270
www.KDCarchitects.com

ARCHITECT:

ARCH. REG: AR91344

CONSULTANT:

REVISIONS

DATE:	DESCRIPTION:
10/18/24	SCHEMATIC DESIGN
6/5/25	DESIGN DEVELOPMENT
10/23/25	50% CONSTRUCTION DOCS
11/14/25	PERMIT SET

PROJECT:
SERENITY SEASIDE RESORT
BUILDING #1
THE INN
186 SOUTH BAY SHORE DRIVE, EASTPOINT, FL 32328

Serenity Seaside Operations, LLC
174 Watercolor Way, PMB 410
Santa Rosa Beach, Florida 32459

JOB NUMBER: 23019.1

DATE: --/--/----

TITLE: INTERIOR PARTITION SECTIONS & DETAILS

SHEET: A851

K:\Projects\23\23019\DWGs\Serenity_Bldg-1_Inn\Sheets\23019.1-A851.dwg Plotted: Nov 13, 2025 - 6:32pm by ColebLawrence

GENERAL NOTES

A. PARTITION TYPES SHOWN ON FLOOR PLANS ON SHEETS A101(A-C), A102(A-C), A103(A-C).

SHEET NOTES / LEGEND

1. -

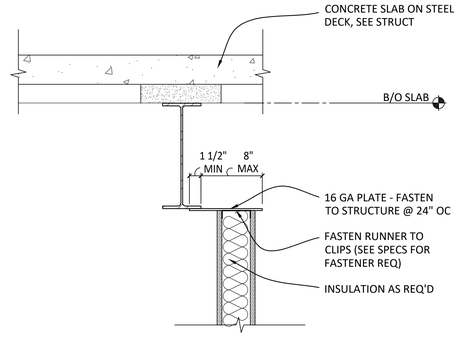

A N.R. PARTION OFFSET FROM BEAM

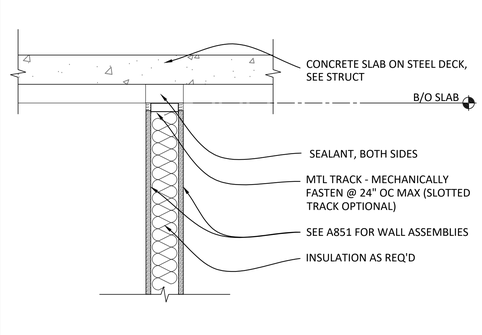

B NON-RATED METAL STUD PARTITION

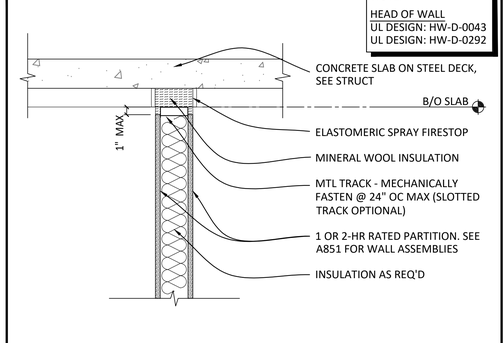

C RATED RATED PARTITION TO STEEL DECK

BASED ON NATIONAL GYPSUM DETAIL: SS-103

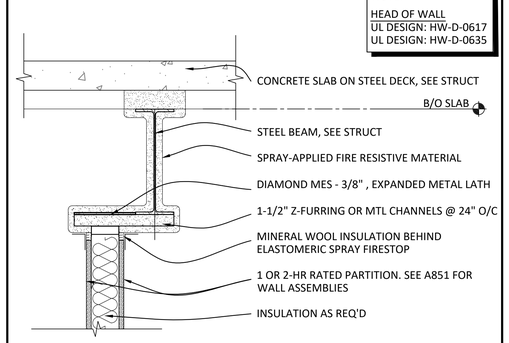

D RATED PARTITION OFFSET FROM BEAM

BASED ON NATIONAL GYPSUM DETAIL: SS-109

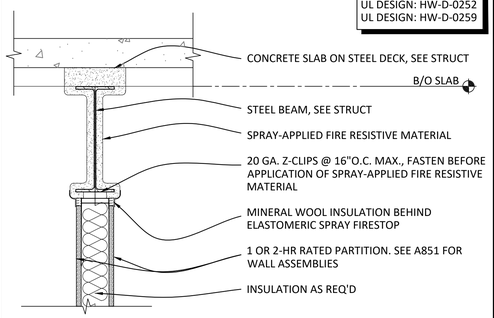

E RATED PARTITION IN LINE WITH BEAM

BASED ON NATIONAL GYPSUM DETAIL: SS-108

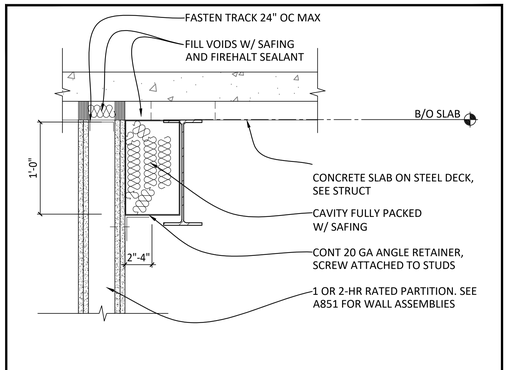

F RATED PARTITION ADJ TO BEAM

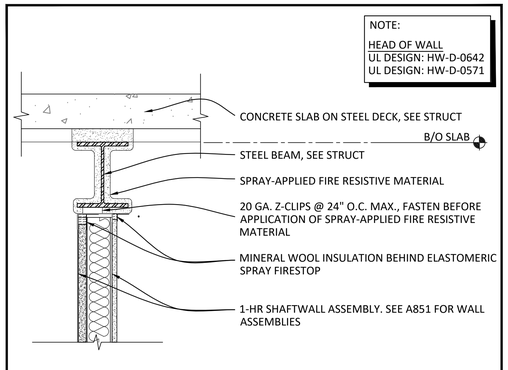

G SHAFT WALL IN LINE WITH BEAM

BASED ON NATIONAL GYPSUM DETAIL: SW-207

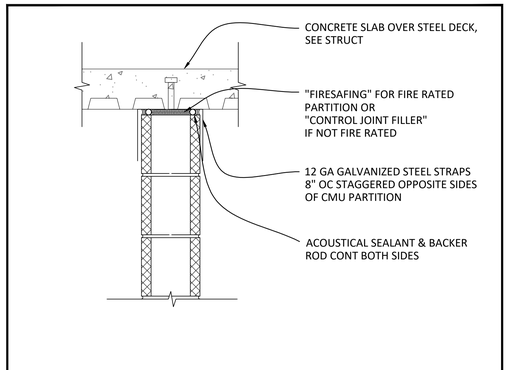

H CMU PARTITION

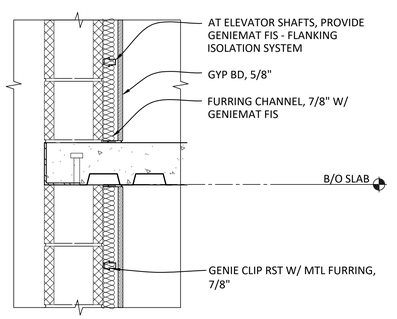

J CMU PARTITION

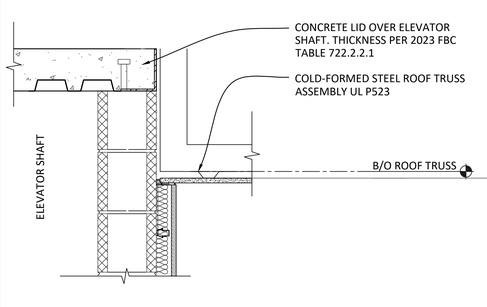

J CMU SHAFT ENCLOSURE CONC LID

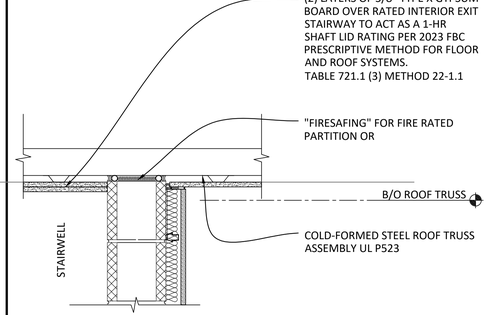

K CMU SHAFT ENCLOSURE GYP LID

A1	TOP OF WALL DETAILS
A861	1-1/2" = 1'-0"

KUO DIEDRICH CHI

730 PEACHTREE STREET, NE
STUDIO 325
ATLANTA, GEORGIA 30308
678.244.6270

www.KDCarchitects.com

ARCHITECT:

ARCH. REG: AR91344

CONSULTANT:

REVISIONS

DATE:	DESCRIPTION:
10/18/24	SCHEMATIC DESIGN
6/5/25	DESIGN DEVELOPMENT
10/23/25	50% CONSTRUCTION DOCS
11/14/25	PERMIT SET

PROJECT:

SERENITY SEASIDE RESORT

BUILDING #1

THE INN

186 SOUTH BAY SHORE DRIVE, EASTPOINT, FL 32328

Serenity Seaside Operations, LLC
174 Watercolor Way, PMB 410
Santa Rosa Beach, Florida 32459

JOB NUMBER: 23019.1

DATE: --/--/----

TITLE: TOP OF WALL DETAILS

SHEET: A861

K:\Projects\23\23019\DWGs\Serenity_Bldg-1_Inn\Sheets\23019.1-A861.dwg Plotted: Nov 13, 2025 - 6:32pm by CoteLawrence

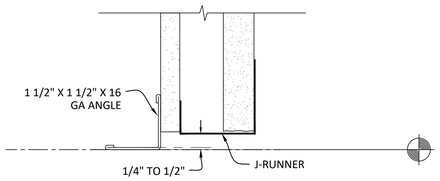

F1 SECTION @ SHAFT WALL

A862 | 6" = 1'-0"

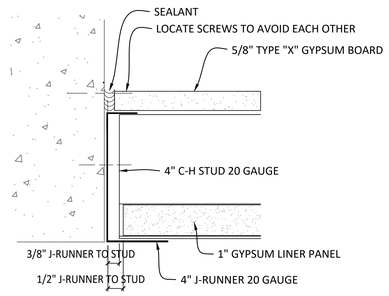

D1 PLAN DETAIL @ SHAFT WALL

A862 | 6" = 1'-0"

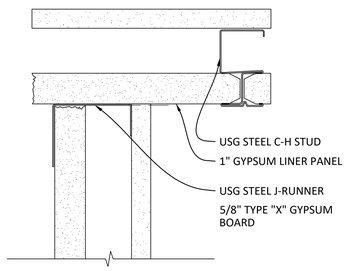

C1 PLAN DETAIL @ SHAFT WALL

A862 | 6" = 1'-0"

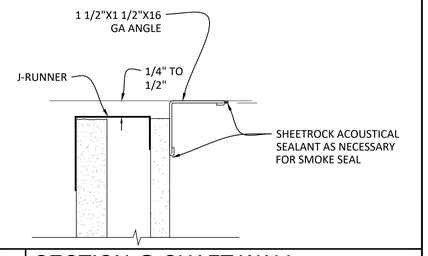

B1 SECTION @ SHAFT WALL

A862 | 6" = 1'-0"

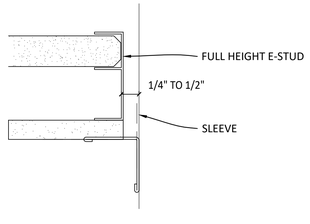

A1 SECTION @ SHAFT WALL

A862 | 6" = 1'-0"

PARTITION STC RATINGS:

1. GUEST ROOM-TO-GUEST ROOM DEMISING WALLS
   ≥ STC-55 (LAB TESTED)
2. GUEST ROOM-TO-CORRIDOR
   ≥ STC-50 (LAB TESTED)
3. GUEST ROOM-TO-STAIR/ELEVATOR SHAFT
   ≥ STC-60-65
4. GUEST ROOM-TO-EXTERIOR
   ≥ STC-50
5. GUEST ROOM-TO-HOUSE KEEPING
   ≥ STC-55 (LAB TESTED)

FLOOR STC RATINGS:

A. FIRST FLOOR – AIRBORNE SOUND ISOLATION (STC) TO 2ND FLOOR GUEST ROOMS
   STC-60 TO 65 (LAB TESTED OR PREDICTED)

B. SINCE A STRUCTURAL SLAB/DECK ALONE MAY NOT PROVIDE SUFFICIENT STC ISOLATION, ONE OF THE FOLLOWING OPTIONS ARE PROPOSED FOR FIRST FLOOR AREAS:

- RESILIENTLY SUSPENDED GYPSUM BOARD INTERSTITIAL CEILING WITH CAVITY INSULATION AT UNDERSIDE OF DECK
- RESILIENTLY SUSPENDED FINISH CEILING WITH CONTINUOUS 5/8" GYPSUM BOARD AND 6" FIBERGLASS CAVITY INSULATION.

D3 STC RATINGS

A862 | -

WALL PARTITION DESIGN/CONSTRUCTION PRACTICES FOR SOUND ISOLATION:

1. ALL SOUND-RATED PARTITIONS SHOULD EXTEND TO THE UNDERSIDE OF THE FLOOR DECK ABOVE AND BE SEALED AT THE JUNCTION WITH ACOUSTICAL SEALANT OR FIRESTOP COMPOUND IF NOT OTHERWISE EXTENDED TO THE DECK FOR FIRE SEPARATION REASONS.
2. ELECTRICAL, TELEPHONE, DATA, AND CABLE TV BOXES. ALL BOXES SHOULD BE SEALED WITH MASTIC OR SHEET CAULKING (PUTTY PADS) ON THE BACK OF THE BOX PRIOR TO WALL CLOSURE AND CAULKED AT THE FACE PERIMETER WITH A NON-HARDENING SEALANT, EQUAL TO USG ACOUSTICAL SEALANT.
3. CONTINUOUS CAULKING AT THE BASE OF THE WALL/FLOOR AND WALL/DECK JUNCTION WITH EITHER ACOUSTICAL OR FIRE-RATED SEALANT.
4. INSULATION THICKNESS SHOULD MATCH THE WALL CAVITY/STUD THICKNESS. EITHER FIBERGLASS OR MINERAL FIBER BLANKET INSULATION IS ACCEPTABLE WITHOUT PREFERENCE. UNFACED INSULATION IS SUITABLE FOR MOST INTERIOR ACOUSTICAL CAVITY FILL REQUIREMENTS.
5. MAINTAIN INSULATION AROUND WALL BOX PENETRATIONS. EXTEND INSULATION BEHIND AND BETWEEN BOXES.
6. IF TOP OF WALL DEFLECTION TRACK IS REQUIRED, PROVIDE STC-RATED CLOSURE SYSTEM EQUIVALENT TO FIRETRAK.
7. PROVIDE TOP OF WALL CLOSURE AT RIBBED AND FLUTED DECKS WITH MINERAL FIBER FIRE-SAFING AND ACOUSTICAL OR FIRE SEALANT AS REQUIRED.

IMPACT SOUND ISOLATION (IIC) BETWEEN GUEST LEVELS:

1. IMPACT SOUND INCLUDES NOISE GENERATED FROM OCCUPANTS WALKING (FOOTFALLS), FURNITURE BEING DRAGGED, ROLLING LUGGAGE, OR ITEMS FALLING ON THE FLOOR AND CAN TRANSMIT TO ADJACENT UNITS BOTH VERTICALLY AND LATERALLY VIA FLOOR DECK AND PARTITION CONNECTIONS.
   ≥ IIC-55 (FIELD OR LAB TESTED)
2. CARPET AND PAD IN GUEST ROOMS WILL ACHIEVE > IIC 60+ AND WOULD NOT REQUIRE ADDITIONAL SOUND CONTROL UNDERLAYMENT OR CEILINGS.
3. HARD-SURFACED FLOORING (HARDWOOD, LAMINATE, TILE, STONE, LVT) IN GUEST ROOM BEDROOM AREAS MUST BE INSTALLED ON A RESILIENT ACOUSTICAL UNDERLAYMENT IN ADDITION TO CRACK CONTROL AND/OR MOISTURE BARRIER MEMBRANES WHICH MAY BE REQUIRED. SOUND CONTROL UNDERLAYMENTS MUST BE ABLE TO ACHIEVE IIC ≥ 52 WHEN TESTED ON A CONCRETE SLAB WITHOUT A CEILING.
4. JOIST FLOORS REQUIRE RESILIENTLY ATTACHED GYPSUM BOARD CEILING WITH CAVITY INSULATION. WIRE SUSPENSION GRID, RESILIENT CHANNELS, OR CLIPS ARE ATTACHMENT OPTIONS.

D4 SOUND ISOLATION NOTES

A862 | -

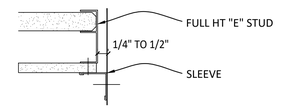

C DETAIL

SHAFTWALL

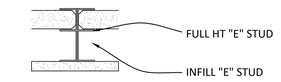

B DETAIL

SHAFTWALL

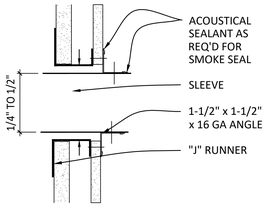

A SECTION

REF: UL R13479

A3 DETAILS

A862 | 3" = 1'-0"

NOTE :
BASED ON NATIONAL GYPSUM DETAIL SW-603

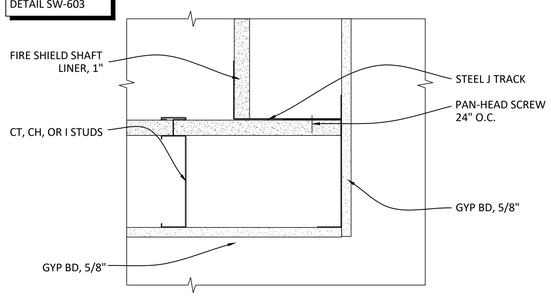

B4 PLAN DETAIL @ 1-HR SHAFTWALL CORNER

A862 | 3" = 1'-0"

NOTE :
BASED ON NATIONAL GYPSUM DETAIL SW-604

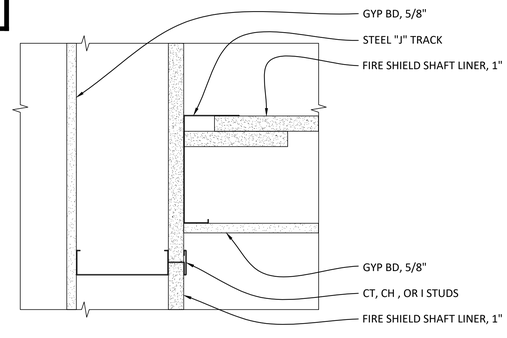

A4 PLAN DETAIL @ 1-HR SHAFTWALL CORNER

A862 | 3" = 1'-0"

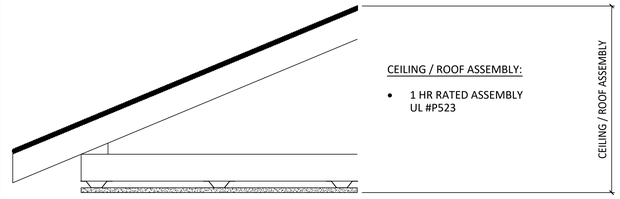

D6 RATED ROOF & FLOOR/CEILING ASSEMBLIES

A862 | 1-1/2" = 1'-0"

NOTE :
PER 2023 FBC 713.11, SHAFTS SHALL BE ENCLOSED AT THE LOWEST LEVEL WITH CONSTRUCTION OF THE SAME FIRE-RESISTANCE RATING AS THE LOWEST FLOOR THROUGH WHICH THE SHAFT PASSES.

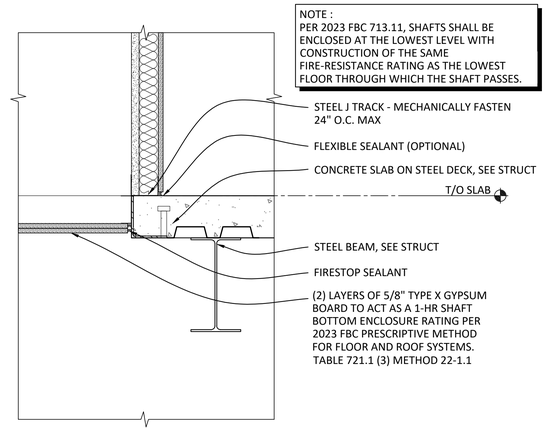

B6 1 HR SHAFTWALL ENCLOSURE AT BOTTOM

A862 | 1-1/2" = 1'-0"

NOTE :
BASED ON NATIONAL GYPSUM DETAIL SW-102

NOTE:
HEAD OF WALL - 1 HR
UL DESIGN: HW-D-0194

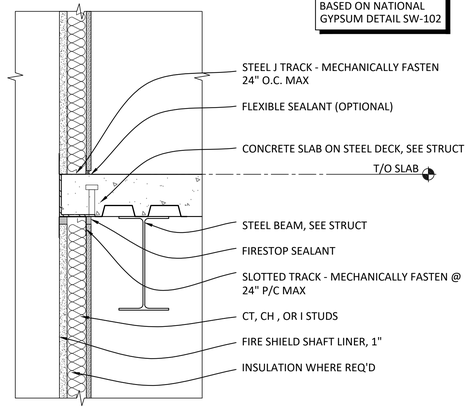

A6 1 HR SHAFTWALL W/ DEFLECTION TRACK

A862 | 1-1/2" = 1'-0"

KUO DIEDRICH CHI

730 PEACHTREE STREET, NE
STUDIO 325
ATLANTA, GEORGIA 30308
678.244.6270

www.KDCarchitects.com

ARCHITECT:

ARCH. REG: AR91344

CONSULTANT:

REVISIONS

DATE:	DESCRIPTION:
10/18/24	SCHEMATIC DESIGN
6/5/25	DESIGN DEVELOPMENT
10/23/25	50% CONSTRUCTION DOCS
11/14/25	PERMIT SET

PROJECT:

SERENITY SEASIDE RESORT

BUILDING #1

THE INN

186 SOUTH BAY SHORE DRIVE, EASTPOINT, FL 32328

Serenity Seaside Operations, LLC
174 Watercolor Way, PMB 410
Santa Rosa Beach, Florida 32459

JOB NUMBER: 23019.1

DATE: --/--/----

TITLE: PARTITION SECTIONS & DETAILS

SHEET: A862

K:\Projects\23\23019\DWGs\Serenity_Bldg-1_Inn\Sheets\23019.1-A862.dwg Plotted: Nov. 13, 2025 - 6:32pm by ColebLawrence

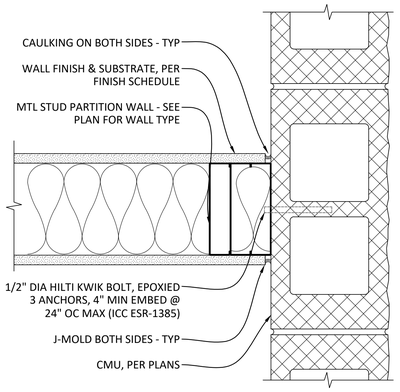

E1 PLAN DETAIL @ MTL STUD TO CMU

A871 | 3" = 1'-0"

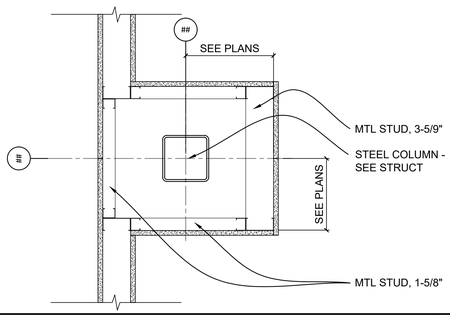

D1 PLAN DETAIL @ STEEL COLUMN, TYP

A871 | 1-1/2" = 1'-0"

NOTES:

1. USE THIS DETAIL TO ISOLATE ALL DUCTWORK, PIPING, & CONDUIT THROUGH THE WALLS OF DINING RMS, MEETING RMS, OFFICES & ELEC RMS
2. THIS DETAIL DOES NOT APPLY TO DUCT PENETRATIONS W/ A FIRE/SMOKE DAMPER

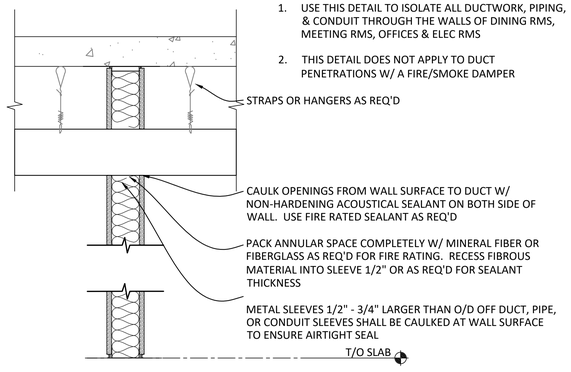

B1 PARTITION PENETRATION DETAIL (TYP)

A871 | 1-1/2" = 1'-0"

NOTE : CORNER GUARD HEIGHT = 4'-0", ON TOP OF FLOOR BASE

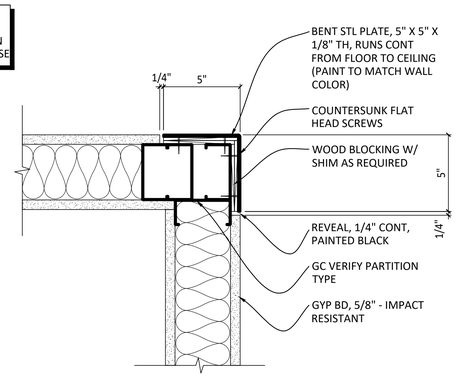

A1 PLAN DETAIL @ CORNER GUARDS

A871 | 3" = 1'-0"

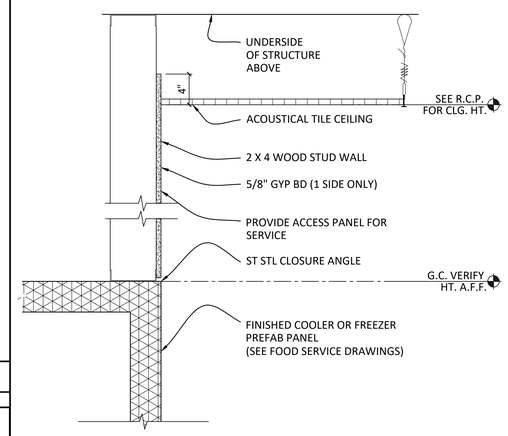

E3 SECTION @ HEAD OF COOLER

A871 | 1-1/2" = 1'-0"

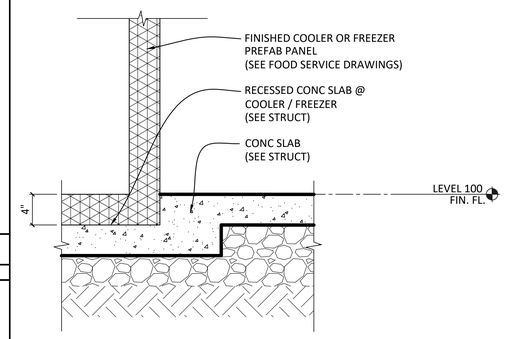

C3 SECT @ RECESSED FLOOR/ COOLER

A871 | 1-1/2" = 1'-0"

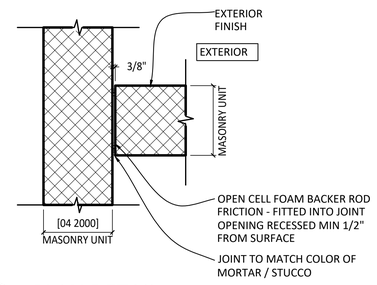

B PLAN DETAIL

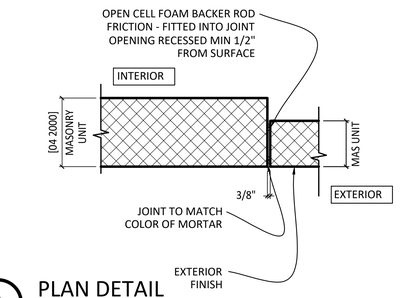

A PLAN DETAIL

A3 DETAILS @ CMU CONTROL JOINTS

A871 | 1-1/2" = 1'-0"

NOTE: SEE FLOOR PLANS FOR PARTITION TYPES & LOCATIONS

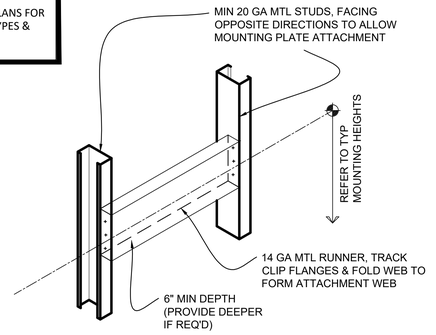

C ATTACHMENT ISOMETRIC

PROVIDE AT WALLS FOR : GRAB BARS

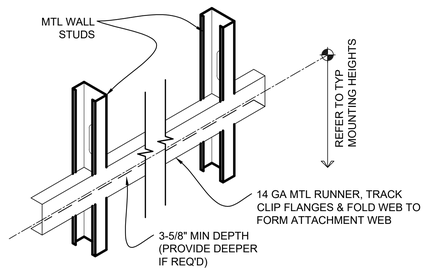

B ATTACHEMNT ISOMETRIC

PROVIDE AT WALLS FOR : BASE CABINETS, BASE COUNTER TOPS, COUNTERTOP SUPPORT BRACKETS, UPPER CABINETS, FULL HEIGHT CABINETS & WALL MIRRORS

A ATTACHMENT DETAIL

PROVIDE AT WALLS FOR : TOILET ACCESSORIES & EQUIPMENT (TYP - UNO)

C4 ACCESSORY / EQUIP MOUNTING DETAILS

A871 | 1-1/2" = 1'-0"

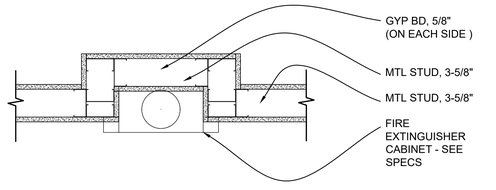

B IN RATED WALL

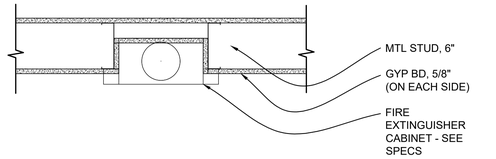

A IN NON RATED WALL

A4 PLAN DETAIL @ FE CABINETS

A871 | 1-1/2" = 1'-0"

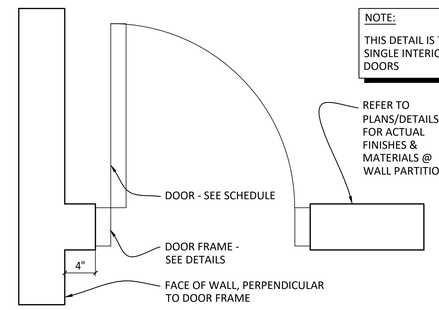

E6 PLAN DETAIL @ DOOR JAMB / WALL

A871 | 1-1/2" = 1'-0"

NOTE: SEE FLOOR PLANS FOR PARTITION TYPES & LOCATIONS

NOTES: RUN GYP. BD. CONT. PAST PARTITION INTERSECTIONS AT ALL FIRE RATED & SMOKE BARRIER PARTITIONS, IN ACCORDANCE W/ THE FOLLOWING PRIORITY

2 HOUR FIRE & SMOKE WALL	PRIORITY 1 (HIGHEST)
2 HOUR FIRE WALL	PRIORITY 2
2 HOUR SHAFT WALL	
1 HOUR FIRE & SMOKE WALL	PRIORITY 3
1 HOUR FIRE WALL	PRIORITY 4
NON-RATED WALL	PRIORITY 4 LOWEST

DETAIL KEYNOTES

1. METAL STUD TRACK - CONT AT PARTITION WALL HEAD & BASE
2. GYP BD - SEE PARTITION TYPES
3. FIRE RATED SEALANT (WHERE REQUIRED)
4. RATED MASONRY/CONC WALL / STRUCTURE
5. AT ALL PARTITION INTERSECTIONS - SECURE STUDS TO HEAD & FLOOR TRACKS & TO INTERSECTING PARTITION FRAMING
6. SEE PARTITION TYPE FOR METAL STUD SIZE
7. CORNER BEAD REQUIRED AT ALL OUTSIDE CORNERS
8. LOCATE A METAL WALL STUD AT THIS LOCATION AT ALL PARTITION INTERSECTIONS
9. GYP BD ON METAL FURRING - SEE PARTITION TYPES
10. CONTINUE RATED GYP BD AROUND STUD PROVIDE GYP BD LAYERS PER UL

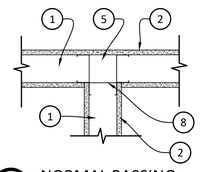

A NORMAL PASSING

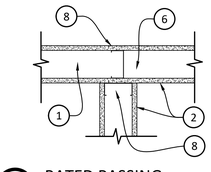

D RATED PASSING

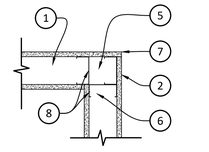

B NORMAL CORNER

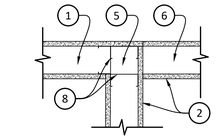

E RATED CORNER

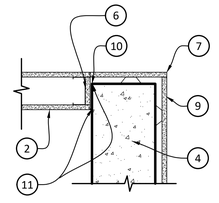

C RATED CORNER/PART. TERM.

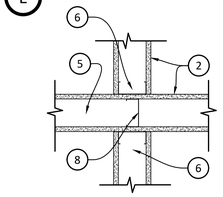

F RATED CROSSING

A6 METAL STUD WALL INTERSECTIONS

A871 | 1-1/2" = 1'-0"

KUO DIEDRICH CHI
730 PEACHTREE STREET, NE
STUDIO 325
ATLANTA, GEORGIA 30308
678.244.6270
www.KDCarchitects.com

ARCHITECT:

ARCH. REG: AR91344

CONSULTANT:

REVISIONS

DATE:	DESCRIPTION:
10/18/24	SCHEMATIC DESIGN
6/5/25	DESIGN DEVELOPMENT
10/23/25	50% CONSTRUCTION DOCS
11/14/25	PERMIT SET

PROJECT:

SERENITY SEASIDE RESORT

BUILDING #1

THE INN

186 SOUTH BAY SHORE DRIVE, EASTPOINT, FL 32328

Serenity Seaside Operations, LLC
174 Watercolor Way, PMB 410
Santa Rosa Beach, Florida 32459

JOB NUMBER: 23019.1

DATE: --/--/----

TITLE: PARTITION SECTIONS & DETAILS @ INTERIOR

SHEET: A871

K:\Projects\23\23019\DWGs\Serenity_Bldg-1_Inn\Sheets\23019.1-A871.dwg Plotted: Nov 13, 2025 - 6:33pm by ColebLawrence

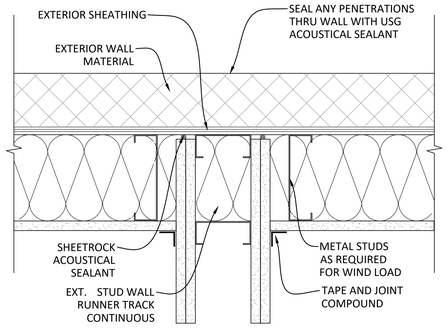

E1 PLAN DETAIL

A872 | 3" = 1'-0"

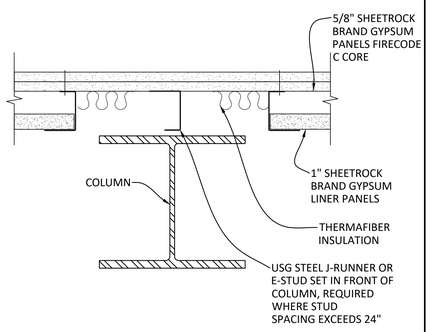

E2 PLAN DETAIL

A872 | 3" = 1'-0"

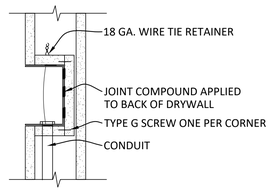

NOTE:
CUT ALL "ENCLOSURE" PIECES OF GYPSUM PANEL TO INSURE PROPER, TIGHT FIT.

E4 PLAN DETAIL

A872 | 3" = 1'-0"

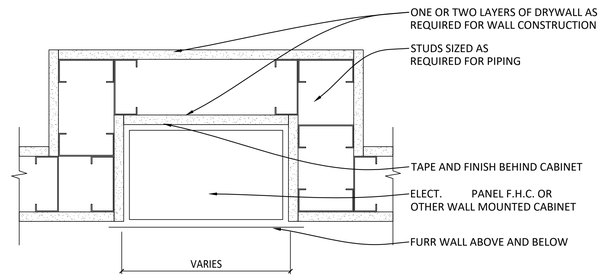

E5 PLAN DETAIL

A872 | 3" = 1'-0"

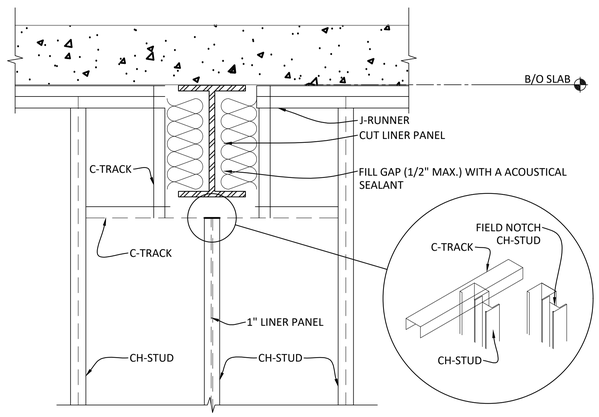

D1 SECTION

A872 | 3" = 1'-0"

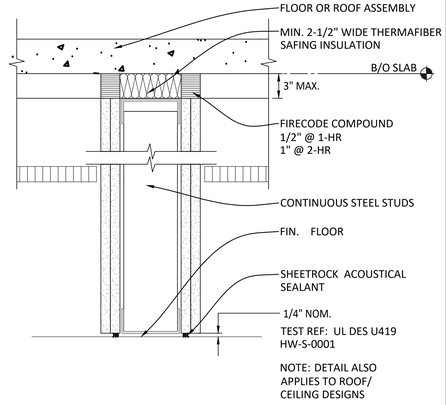

D3 SECTION

A872 | 3" = 1'-0"

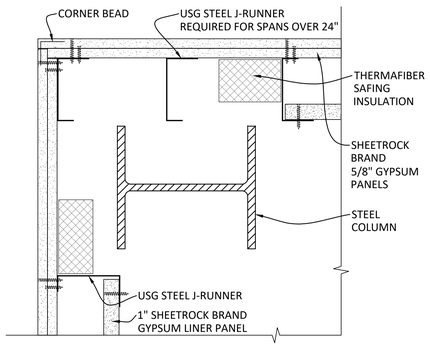

D4 PLAN DETAIL

A872 | 3" = 1'-0"

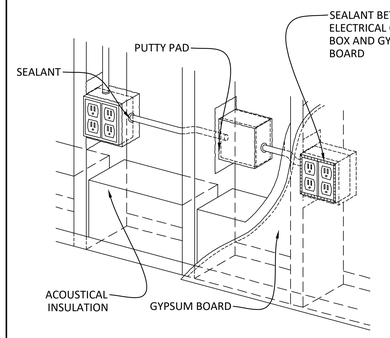

NOTE:

1. ELECTRICAL OUTLETS ON OPPOSITE SIDES OF A SOUND RATED WALL ARE TO BE SPACED TO PROVIDE A MINIMUM OF ONE STUD BETWEEN THE BOXES.
2. THE PUTTY PAD IS TO COMPLETELY SEAL ALL SIDES OF EACH OUTLET BOX.
3. WHERE PARTITIONS ARE SCHEDULED TO BE SOUND RATED PROVIDE ACOUSTICAL PUTTY PAD AT ALL OUTLET LOCATIONS.
4. PUTTY PAD MUST BE FIRE RATED IN FIRE RATED PARTITIONS

C6 ISOMETRIC DETAIL @ PUTTY PAD SOUND ATT

A872 | N.T.S.

NOTE:
COMMERCIAL WASHER: DESIGN BASIS: MILNOR, MODEL# 30022 VRJ, 60 LB CAPACITY, RIGID-MOUNT WASHER-EXTRACTOR

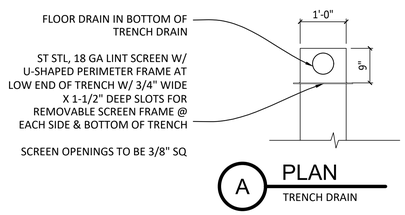

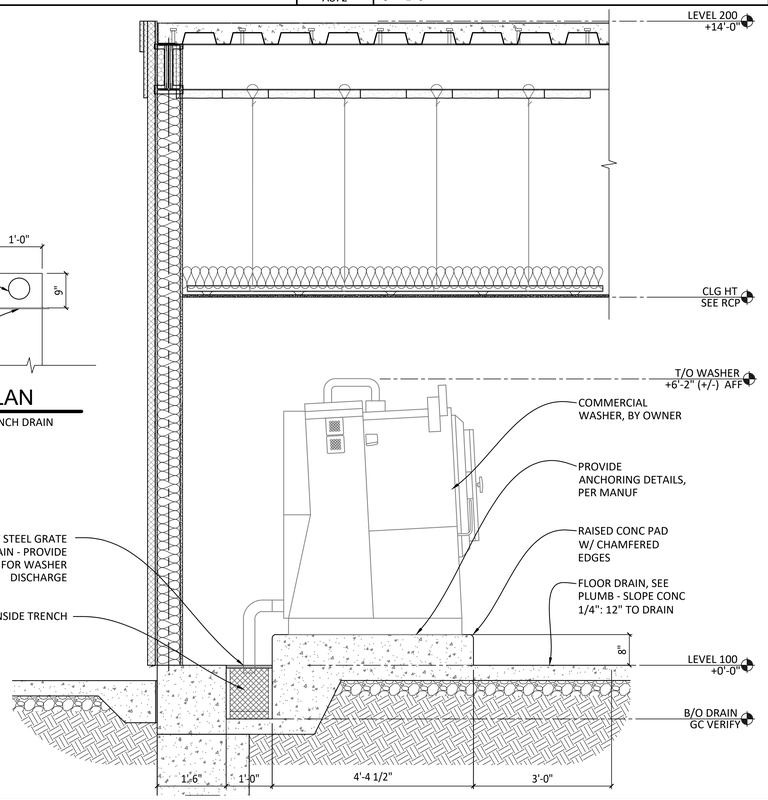

IMPORTANT: DO NOT ISOLATE THE WASHER FOUNDATION FROM THE SURROUNDING FLOOR. POUR CONCRETE (3500 PSI MINIMUM) PAD CONTINUOUSLY WITH THE SURROUNDING FLOOR. A MINIMUM 12-INCH TOTAL DEPTH BETWEEN THE FINISHED FLOOR AND THE RAISED PAD IS RECOMMENDED TO HANDLE THE DYNAMIC LOAD OF THE WASHERS. DO NOT ISOLATE THE WASHER PAD.

A1 SECTION @ COMMERCIAL WASHER

A872 | 3/4" = 1'-0"

NOTES:

1. CONSUMPTIONS ARE ESTIMATED FOR MAX OR PEAK LOADS.
2. FORM AN OPENING 10'-11.25"W X 7'-5.75"H FOR THE DRYER ENCLOSURE. A 3-INCH TRIM SURROUNDING THE DRYERS IS TYPICAL. THE MACHINES SHOULD PROTRUDE OUT AT LEAST 1-INCH. THE ENCLOSURE DETAIL SHOWS MINIMUM DISTANCE REQUIREMENTS.
3. THE RAISED PAD IS SHOWN AS 10" ABOVE THE FINISHED FLOOR. THE WASHERS ARE RECOMMENDED TO HAVE 12" TOTAL OF CONTINUOUS SLAB TO HANDLE THE DYNAMIC LOAD.
4. FOR INSTALLATION, THE EQUIPMENT REQUIRES MINIMUM 45" DOORWAYS LEADING TO THE LAUNDRY AREA.
5. ALL DRYER EXHAUST VENTING IS TO BE SUPPLIED/DESIGNED BY THE GENERAL CONTRACTOR.
6. DRAIN TRENCH TO HAVE A MINIMUM CAPACITY OF 13.5 CUBIC FEET. STARTING DEPTH TO BE 12" AND SLOPE .25" PER FOOT TOWARDS DRAIN.
7. A MINIMUM OVERHEAD CLEARANCE OF 12 INCHES IS REQUIRED. 18" IS RECOMMENDED.
8. DRYERS MAKE-UP AIR REQUIRE MINIMUM 1.7 CUBIC FEET BEHIND EACH DRYER. ADD 33% FOR LOUVER ALLOWANCE, TOTALING 2.3 CUBIC FEET.

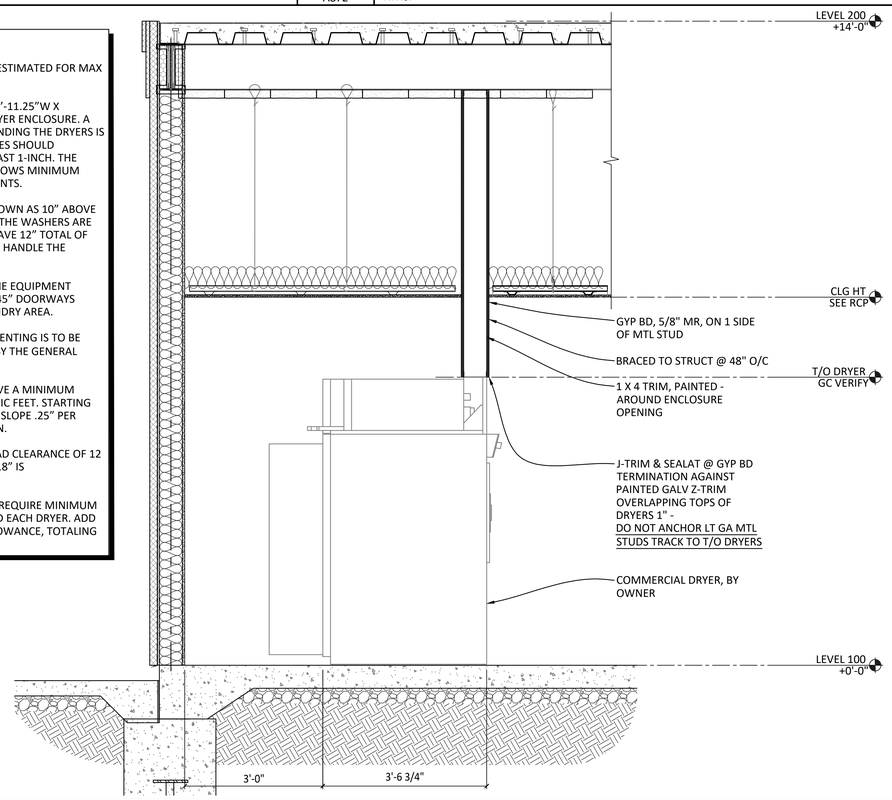

A4 SECTION @ COMMERCIAL DRYER HEAD WALL

A872 | 3/4" = 1'-0"

KUO DIEDRICH CHI
730 PEACHTREE STREET, NE
STUDIO 325
ATLANTA, GEORGIA 30308
678.244.6270
www.KDCarchitects.com

ARCHITECT:

ARCH. REG: AR91344

CONSULTANT:

REVISIONS

DATE:	DESCRIPTION:
10/18/24	SCHEMATIC DESIGN
6/5/25	DESIGN DEVELOPMENT
10/23/25	50% CONSTRUCTION DOCS
11/14/25	PERMIT SET

PROJECT:

SERENITY SEASIDE RESORT

BUILDING #1

THE INN

186 SOUTH BAY SHORE DRIVE, EASTPOINT, FL 32328

Serenity Seaside Operations, LLC
174 Watercolor Way, PMB 410
Santa Rosa Beach, Florida 32459

JOB NUMBER: 23019.1

DATE: --/--/----

TITLE: PARTITION SECTIONS & DETAILS

SHEET: A872

K:\Projects\23\23019\DWGs\Serenity_Bldg-1_Inn\Sheets\23019.1-A872.dwg Plotted: Nov. 13, 2025 - 6:33pm by ColebLawrence

K:\Projects\23\23019\DWGs\Serenity_Bldg-1_Inn\Sheets\23019.1-A881.dwg Plotted: Nov 13, 2025 – 6:33pm by ColebLawrence

System No. C-AJ-2015

December 20, 2000

F Rating — 2 Hr

T Rating — 0 Hr

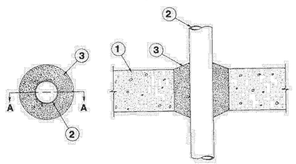

SECTION A–A

1. **Floor or Wall Assembly** — Min 4-1/2 in. thick reinforced lightweight or normal weight (100-150 pcf or 1600-2400 kg/m^3) concrete. Wall may also be constructed of any UL Classified **Concrete Blocks***. Max diam of opening is 6 in. See **Concrete Blocks** (CAZT) category in the Fire Resistance Directory for names of manufacturers.

2. **Nonmetallic Pipe** — One nonmetallic pipe to be centered within the firestop system. A nom annular space of 1-3/4 in. is required within the firestop system. Pipe to be rigidly supported on both sides of floor or wall assembly. The following types and sizes of nonmetallic may be used:

A. **Polyvinyl Chloride (PVC) Pipe** — Nom 2 in. diam (or smaller) Schedule 40 PVC pipe for use in closed (process or supply) or vented (drain, waste or vent) piping systems.

B. **Chlorinated Polyvinyl Chloride (CPVC) Pipe** — Nom 2 in. diam (or smaller) SDR 17 CPVC pipe for use in closed (process or supply) or vented (drain, waste or vent) piping systems.

3. **Fill, Void or Cavity Material*** — **Caulk** — Min 4-1/2 in. thickness of fill material applied within the annulus, flush with both surfaces of floor or wall. Additional fill material to be installed such that a min 3/4 in. crown is formed around the penetrating item on each side of wall or floor.
RECTORSEAL — Metacaulk 950

E1	SYSTEM NO.C-AJ-2015
A881	N.T.S.

System No. C-AJ-7104

January 14, 2015

ANSI/UL1479 (ASTM E814)	CAN/ULC S115
F Rating — 2 Hr	F Rating — 2 Hr
T Rating — 1/4 Hr	FT Rating — 1/4 Hr
	FH Rating — 2 Hr
	FTH Rating — 1/4 Hr

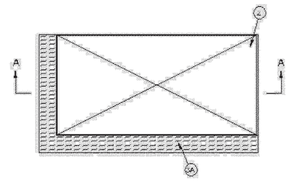

Section A-A

1. **Floor or Wall Assembly** — Min 4-1/2 in. (114 mm) thick reinforced lightweight or normal weight (100-150 pcf or 1600-2400 kg/m^3) concrete. Wall may also be constructed of any UL Classified **Concrete Blocks***. Max area of opening is 364 in.^{2} (2348 cm^2) with a max dimension of 26 in. (660 mm).

See **Concrete Blocks** (CAZT) category in the Fire Resistance Directory for names of manufacturers.

2. **Steel Duct** — Max 24 in. by 12 in. (610 by 305 mm) by No. 24 gauge (or heavier) galv steel duct. One steel duct to be positioned within the firestop system. The annular space shall be min 0 in. (point of contact max two adjacent sides) to max 2 in. (51 mm). Duct to be rigidly supported on both sides of floor or wall assembly.

3. **Firestop System** — The firestop system shall consist of the following:

A. **Packing Materials** — Min 4 in. (102 mm) thickness of min 4 pcf (64 kg/m^3) mineral wool batt insulation firmly packed into opening as a permanent form between the bare steel duct and the periphery of the opening. Packing material to be recessed from top surface of floor or both surfaces of wall as required to accommodate the required thickness of fill material.

B. **Fill, Void or Cavity Material*** — **Sealant** — Min 1/2 in. (13 mm) thickness of fill material applied within the annulus, flush with top surface of floor or with both surfaces of wall. Min 1/2 in. (13 mm) diam bead of sealant applied at point of contact.
HILTI CONSTRUCTION CHEMICALS, DIV OF HILTI INC — FS-ONE Sealant or FS-ONE MAX Intumescent Sealant.

4. **Steel Retaining Angles** — Nom 2 by 2 in. (51 by 51 mm) by No. 18 gauge (or heavier) steel angles attached to steel duct on all four sides on the bottom surface of floor or both surfaces of wall. The angles shall be attached to the duct with No. 8 (or larger) steel sheet metal screws spaced max of 6 in. (152 mm).

B1	SYSTEM NO.C-AJ-7104
A881	N.T.S.

System No. F-A-1166

September 08, 2017

ANSI/UL1479 (ASTM E814)	CAN/ULC S115
F Rating — 3 Hr	F Rating — 3 Hr
T Rating — 1/2 Hr	FT Rating — 1/2 Hr
	FH Rating — 3 Hr
	FTH Rating — 1/2

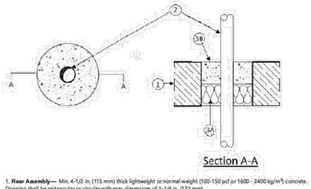

Section A-A

1. **Floor Assembly** — Min. 4-1/2 in. (115 mm) thick lightweight or normal weight (100-150 pcf or 1600 - 2400 kg/m^3) concrete. Opening shall be rectangular or circular with max dimensions of 5-1/4 in. (132 mm).

2. **Pipes/ Tubes**— — Single to be installed within the opening. The annular space between the pipes and the periphery of the opening to be 2 in (50 mm). Pipes to be rigidly supported on both sides of the floor assembly. The following penetrants may be used:

A. Max 1-1/4 in. (32 mm) diameter Schedule M (or heavier) copper pipe for use in closed (process or supply) or vented (drain, waste or vent) piping systems..

B. Max 1-1/4 in. (32 mm) diameter Schedule S (or heavier) steel pipe for use in closed (process or supply) or vented (drain, waste or vent) piping systems..

3. **Through-Penetration Firestop System**— The Through-Penetration Firestop System shall consist of the following:
A. Packing material— Nom. 2-3/8 in. (60 mm) thick mineral wool board min. 8.3 pcf (130 kg/m^3) firmly packed into the opening of the floor as a permanent form flush to the bottom face of the floor.

B. Fill, Void or Cavity Material*— Nom 2-1/8 in. (36 mm) cast in to aperture in the floor over the packing material and around the services.
SYT BRANDSCHUTZ VERTRIEBSGESELLSCHAFT MBH INTERNATIONAL — PYRO-SAFE NOVASTI VGM

System No. C-AJ-8061

October 31, 2017

ANSI/UL1479 (ASTM E814)	CAN/ULC S115
F Rating — 2 Hr	F Rating — 2 Hr
T Rating — 0 Hr	FT Rating — 0 Hr
	FH Rating — 2 Hr.
	FTH Rating — 0 Hr.

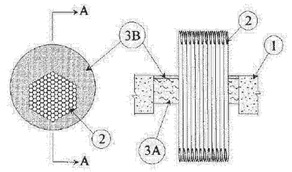

SECTION A-A

1. **Floor or Wall Assembly**— Min 5 in. (127 mm) thick lightweight or normal weight (110 - 150 pcf or 1600-2400 kg/m^3) concrete. Wall may also be constructed of any UL Classified **Concrete Blocks***. Max diam of opening is 10-1/4 in. (260 mm). See **Concrete Blocks** (CAZT) category in the Fire Resistance Directory for names of manufacturers.

2. **Through Penetrants**— Pipes, conduits or cables to be bundled within the opening such that the aggregate cross-sectional area of penetrants in opening to be max 27 percent of the cross-sectional area of the opening in floor or wall. The space between penetrants and periphery of opening shall be 0 in. (point contact) to max 3-1/2 in. (88 mm). Penetrants to be rigidly supported on both sides of floor or wall assembly. The following types and sizes of penetrants may be used:
A. **Metallic Pipes** — The following types and sizes of metallic pipes, conduits or tubing may be used:
1. Steel Pipe — Nom 2 in. (51 mm) diam (or smaller) Schedule 5 (or heavier) steel pipe.

2. **Conduit** — Nom 2 in. (51 mm) diam (or smaller) steel electrical metallic tubing or steel conduit.

3. **Stainless Steel Pipe**— Nom 2 in. (51 mm) diam (or smaller) Schedule 5 (or heavier) stainless steel pipe.

B. Cables — Any combination of the following types and sizes of cables may be used:
1. 1/C 750 kcmil (or smaller) copper conductor polyvinyl chloride (PVC) jacketed aluminum clad or steel clad TEK cable with cross-linked polyethylene (XLPE) insulation..

2. 3/C 350 kcmil (or smaller) copper conductor PVC jacketed aluminum clad or steel clad TEK cable with XLPE insulation.

3. 4/C No. 14 AWG (or smaller) copper conductor PVC jacketed aluminum clad or steel clad TEK cable with XLPE insulation.

4. Max 25 pair No. 20 AWG (and smaller) copper conductor PVC jacketed cable with PVC insulation.

5. 1/C 400 kcmil (or smaller) aluminum or copper conductor cable with XLPE insulation.

6. 4/C No. 8 AWG (or smaller) copper conductor PVC jacketed cable with XLPE insulation.

3. **Firestop System** — The firestop system shall consist of the following:
A. **Packing Material**— Min 3 1/2 in. (89 mm) thickness of min 4 pcf (64 kg/m^3) mineral wool batt insulation firmly packed into opening as a permanent form. Packing material to be recessed from top surface of floor or from both surfaces of wall as required to accommodate the required thickness of fill material (Item 3B).

B. Fill, Void or Cavity Material* — Sealant— Min 1/2 in. (13 mm) thickness of fill material applied within annulus, flush with top surface of floor or both surfaces of wall. Sealant to be forced into interstices of penetrants to max extent possible.
PASSIVE FIRE PROTECTION PARTNERS — 3300EK, 4920NS, 4190SL, 4800DW

B1. **Fill, Void or Cavity Material* — Sealant** — Min 1/4 in. (6 mm) thickness of fill material applied within annulus, flush with top surface of floor or min 1/8 in. (3.2 mm) thickness of fill material applied within annulus, flush with both surfaces of wall. At point of contact location between penetrant and concrete, a 1/4 in. (6 mm) diam bead of fill material shall be applied at the concrete/penetrant interface on the top surface of floor or both surfaces of wall.
PASSIVE FIRE PROTECTION PARTNERS — 3300SL, 1930 SP

D1	SYSTEM NO.C-AJ-8061
A881	N.T.S.

System No. C-AJ-8182

August 18, 2011

ANSI/UL1479 (ASTM E814)	CAN/ULC S115
F Rating - 2 Hr	F Rating - 2 Hr
T Rating – 1/4 Hr	FT Rating - 1/4 Hr
L Rating At Ambient – Less Than 1 CFM/sq ft	FH Rating - 2 Hr
L Rating At 400 F - Less Than 1 CFM/sq ft	FTH Rating - 1/4 Hr
W Rating - Class 1 (See Items 3, 3D3 and 4B)	L Rating At Ambient - Less Than 1 CFM/sq ft
	L Rating At 400 F - Less Than 1 CFM/sq ft

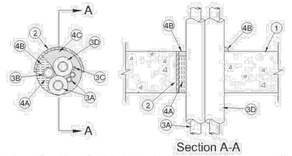

Section A-A

1. **Floor or Wall Assembly** — Reinforced lightweight or normal weight (100-150 pcf or 1600-2400 kg/m^3) concrete floor or wall assembly. Min 4-1/2 in. (114 mm) thick floor. Min 5 in. (127 mm) thick wall. Floor may also be constructed of any min 6 in. (152 mm) thick hollow core UL Classified **Precast Concrete Units***. Wall may also be constructed of any UL Classified **Concrete Blocks***. Max diam of opening is 5 in. (127 mm).
See **Concrete Blocks** (CAZT) or **Precast Concrete Units** (CPTV) categories in the Fire Resistance Directory for names of manufacturers.

2. **Steel Sleeve** — (Optional) - Nom 5 in. (127 mm) diam (or smaller) Schedule 10 (or heavier) steel pipe sleeve or nom 5 in. (127 mm) diam (or smaller) No. 26 GA (0.022 in. or 0.56 mm thick) sheet metal sleeve with square flange spot welded to the sleeve at approx mid-height and sized to be a min of 2 in. larger than the sleeve diam cast or grouted into concrete flush with floor or wall surfaces.

3. **Through Penetrants** — Pipes, conduits, tubing or cables to be bundled within opening such that the aggregate cross-sectional area of penetrants in opening to be max 54 percent of the cross-sectional area of the opening in floor or wall. The space between the penetrants and between the penetrants and the periphery of the opening shall be min 0 in. (point contact) to max 1-1/2 in. (38 mm). To achieve W Rating, min spacing between penetrants is 1/8 in. (3.2 mm). Penetrants to be rigidly supported on both sides of floor or wall assembly. The following types and sizes of penetrants may be used:
A. **Metallic Penetrants** — The following types and sizes of metallic pipes, conduits or tubing may be used:
A1. **Steel Pipe** — Nom 5-1/4 in. (32 mm) diam (or smaller) Schedule 5 (or heavier) steel pipe.

A2. **Iron Pipe** — Nom 1-1/4 in. (32 mm) diam (or smaller) cast or ductile iron pipe.

A3. **Conduit** — Nom 1-1/4 in. (32 mm) diam (or smaller) rigid steel conduit, steel electrical metallic tubing (EMT), or flexible steel conduit.

A4. **Copper Pipe or Tubing** — Nom 1-1/4 in. (32 mm) diam (or smaller) Type L (or heavier) copper tube or Regular copper pipe.

B. **Nonmetallic Penetrants** — The following types and sizes of nonmetallic pipes, conduits or tubing may be used:
B1. **Polyvinyl Chloride (PVC) Pipe** — Nom 1-1/4 in. (32 mm) diam (or smaller) Schedule 40 PVC pipe for use in vented (drain, waste or vent) or closed (process or supply) piping systems.

B2. **Chlorinated Polyvinyl Chloride (CPVC) Pipe** — Nom 1-1/4 in. (32 mm) diam (or smaller) SDR13.5 CPVC pipe for use in closed (process or supply) piping systems.

B3. **Rigid Nonmetallic Conduit**s — Nom 1-1/4 in. (32 mm) diam (or smaller) Schedule 40 PVC conduit installed in accordance with the National Electrical Code (NFPA 70).

C. **Cables** — 4 pair No. 18 AWG copper conductor thermostat cable with PVC jacket and insulation.

D. **Pipe Covering** — The following types of pipe covering materials may be installed on one or more of the metallic pipes or tubing:
D1. **Tube Insulation#** — Nom 1/2 in. (13 mm) thick acrylonitrile butadiene/polyvinyl chloride (AB/PVC) flexible foam furnished in the form of tubing.
See **Plastics** (QMFZ2) category in the Plastics Recognized Component Directory for names of manufacturers. Any Recognized Component tube insulation meeting the above specifications and having a UL 94 Flammability Classification of 94-5VA may be used.

D2. **Pipe Covering**# — Nom 1/2 in. (13 mm) thick hollow cylindrical heavy density (min 3.5 pcf or 56 kg/m^3) glass fiber units jacketed on the outside with an all service jacket. Longitudinal seams sealed with metal fasteners or factory applied self-sealing lap tape. Transverse joints sealed with metal fasteners or with butt tape supplied with the product.
See **Pipe and Equipment Covering Materials** (BRGU) category in the Building Materials Directory for names of manufacturers. Any pipe covering material meeting the above specifications and bearing the UL Classification Marking with a Flame Spread Index of 25 or less and a Smoke Developed Index of 50 or less may be used.

D3. **PVC Jacket** # — (Optional, Not Shown) - An additional PVC jacket, supplied in sheet form, shall be tightly wrapped around the all service jacket on the glass fiber pipe covering with the longitudinal seam continuously sealed using the self-sealing lap tape or adhesive supplied with the jacket. The jacket is to be nom 48 in. (1.22 m) wide by nom 20 or 30 mil (0.5 or 0.8 mm) thick. The jacket shall extend downward into and/or through the opening from a point 36 to 40 in. (0.91 to 1.02 m) above the top surface of the floor assembly. **The PVC jacket must be used for the W Rating to apply. The W Rating applies only with four assemblies.**
See **Plastics** (QMFZ2) category in the Plastics Recognized Component Directory for names of manufacturers. Any Recognized Component plastic material meeting the above specifications and having a UL 94 Flammability Classification of 94-5VA may be used.

4. **Firestop System** — The firestop system shall consist of the following:
A. **Packing Material** — Min 4 in. (102 mm) thickness of 4 pcf (64 kg/m^3) density mineral wool batt insulation tightly-packed into annular space. In floors constructed of hollow-core precast concrete units, mineral wool packing material to extend below exposed cores in precast concrete units. Packing material recessed from top surface of floor or from both surfaces of wall as required to accommodate sealant (Item 4C).

B. **Fill, Void or Cavity Material*** — Sealant — Min 1/2 in. (13 mm) thickness applied flush with top of floor or with both sides of wall. Fill material forced into grouped penetrant interstices to max extent. Min 1/4 in. (6 mm) diam bead of sealant applied at point contact location.
SPECIFIED TECHNOLOGIES INC — SpecSeal 100, 101, 102, 105, 120 or 129 Sealant, SpecSeal LCI Sealant, Pensil 300 Sealant, or Pensil 305 SL Sealant (floors only)

A1	SYSTEM NO.F-A-1166
A881	N.T.S.

A2	SYSTEM NO.C-AJ-8182
A881	N.T.S.

System No. C-BJ-1047

February 23, 2007

F Rating - 2 Hr

T Rating - 2 Hr

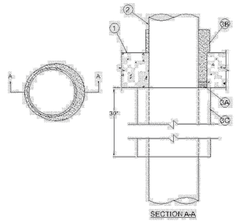

SECTION A-A

1. **Floor or Wall Assembly** — Min 6 in. thick reinforced lightweight or normal weight (100-150 pcf) concrete. Wall may also be constructed of any solid or filled UL Classified Concrete Blocks*. Max diameter of opening is 10 in.

See **Concrete Blocks** (CAZT) category in the Fire Resistance Directory for names of manufacturers.

2. **Through Penetrant** — One metallic pipe to be installed either concentrically or eccentrically within the firestop system. The annular space shall be min 0 in. (point contact) to max 1-3/8 in. Pipe to be rigidly supported on both sides of the floor or wall assembly. The following types and sizes of metallic pipes may be used:

A. **Steel Pipe** — Nom 8 in. diam (or smaller) Schedule 40 (or heavier) steel pipe.

B. **Iron Pipe** — Nom 8 in. diam (or smaller) cast or ductile iron pipe.

3. **Firestop System** — The firestop system shall consist of the following:

A. **Packing Material** — Min 1 in. thickness of 4 pcf mineral wool batt insulation tightly packed into the opening as a permanent form. Packing material to be recessed from top surface of floor as required to accommodate the required thickness of fill material. Packing material not required in walls.

B. **Fill, Void or Cavity Materials*-Foam** — Min 5 in. thickness of fill material applied within the annulus, flush with top surface of floor or min 6 in thickness of fill material applied within the annulus, flush with both surfaces of wall. Additional fill material shall extend above the top surface of the floor in accordance with the following table and shall overlap the concrete 1/2 in. around the perimeter of the opening.
HILTI CONSTRUCTION CHEMICALS, DIV OF HILTI INC — CP620 Fire Foam

Concrete Thickness - In.	Foam Extension Above Surface - In.
6	4
7	3
8	2
9	1
10	None

C. **Pipe Covering Materials*** — Nom 2 in. thick unfaced mineral fiber pipe insulation sized to the outside diam of pipe or tube. Pipe insulation shall extend 30 in. along length of pipe, flush with lower surfaces of floor or both surfaces of wall. Pipe insulation secured with nom 16 AWG steel wire spaced max 6 in. OC.
INDUSTRIAL INSULATION GROUP L L C — High Temperature Pipe Insulation 1200, High Temperature Pipe Insulation BWT or High Temperature Pipe Insulation Thermaloc.

C3	SYSTEM NO.C-BJ-1047
A881	N.T.S.

System No. C-AJ-7149

December 27, 2013

ANSI/UL1479 (ASTM E814)	CAN/ULC S115
F Rating — 2 Hr	F Rating — 2 Hr
T Rating — 1/4 Hr	FT Rating — 1/4 Hr
	FH Rating — 2 Hr
	FTH Rating — 1/4 Hr

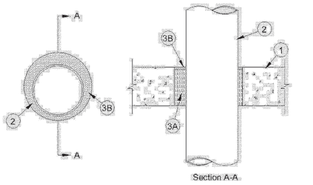

Section A-A

1. **Floor or Wall Assembly** — Min 4-1/2 in. (114 mm) thick reinforced lightweight or normal weight (100-150 pcf (1600-2400 kg/m^3) concrete floor or wall assembly. Wall may also be constructed of any UL Classified **Concrete Blocks***. Max diam of opening is 10 in. (254 mm).

See **Concrete Blocks** (CAZT) category in the Fire Resistance Directory for names of manufacturers.

2. **Steel Vent Duct** — Nom 8 in. (203 mm) diam (or smaller) No. 26 gauge (or heavier) galv steel duct. One duct to be installed either concentrically or eccentrically within the firestop system. The annular space shall be min 1/4 in. (6 mm) to max 1-3/4 in. (44 mm). Duct to be rigidly supported on both sides of floor or wall.

3. **Firestop System** — The firestop system shall consist of the following:

A. **Packing Material** — Min 4-1/4 in. (108 mm) thickness of min 4 pcf (64 kg/cu meter) mineral wool batt insulation firmly packed into opening as a permanent form. Packing material to be recessed from top surface of floor or from both surfaces of wall as required to accommodate the required thickness of fill material.

B. **Fill, Void or Cavity Material*– Caulk** — Min 1/4 in. (6 mm) thickness of fill material applied within the annulus, flush with top surface of floor or with both surfaces of wall.
HILTI CONSTRUCTION CHEMICALS, DIV OF HILTI INC — CFS-S SIL GG, CFS-S SIL SL (floors only)

*** Indicates such products shall bear the UL or cUL Certification Mark for jurisdictions employing the UL or cUL Certification (such as Canada), respectively.**

Last Updated on 2013-12-27

A3	SYSTEM NO.C-AJ-7149
A881	N.T.S.

System No. F-A-2183

April 10 2019

ANSI/UL1479 (ASTM E814)	CAN/ULC S115
F Ratings— 2 or 3 Hr (See Item 2)	F Ratings — 2 or 3 Hr (See Item 2)
T Rating — 3/4 Hr	FT Ratings — 3/4 & 2 Hr (See Item 2)
L Rating At Ambient— Less Than 1 CFM/sq ft	FH Ratings — 2 or 3 Hr (See Item 2)
L Rating At 400 F — Less Than 1 CFM/sq ft	FTH Ratings — 3/4 & 2 Hr (See Item 2)
W Rating— Class 1 (See Item 2)	L Rating At Ambient — Less Than 1 CFM/sq ft
	L Rating At Ambient — Less Than 5.1 L/s/m^2
	L Rating At 204°C — Less Than 5.1 L/s/m^2

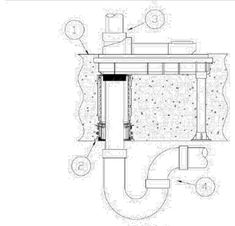

Configuration A

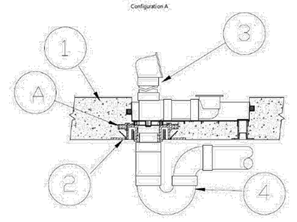

Configuration B

System tested with a pressure differential of 2.5 Pa between the exposed and the unexposed surfaces with the higher pressure on the exposed side.

1. **Floor Assembly** — Min 4-1/2 in. (114 mm) thick reinforced lightweight or normal weight (100-150 pcf or 1600-2400 kg/m^3) concrete..

2. **Firestop Device*— Tub Box** — Nom 12-1/2 in. (318 mm) long by 2 in. (51 mm) deep nonmetallic tub box with adjustable legs and intumescent coupling. Cast in place firestop device attached to form and permanently embedded during concrete placement or grouted in concrete assembly in accordance with accompanying installation instructions. For Config A HIP device, optional accessories (not shown) includes sleeve extension and or Tub Box Extension installed in accordance with installation instructions. For Config B TB devices, optional accessories includes Mildbody seal and/or (Not Shown) Tub Box Extension installed in accordance with installation instructions. Min concrete thickness of 2 in. (51 mm) shall be maintained below tub box.
HOLDRITE — HydroFlame (Config A) HFPTB-NP-0200 HFPTB-TW-0200 or (Config B) TB-NP0200, TB-TW-0200

Note: System is limited to 2 hours when TB-NP-0200, TB-TW-0200 is used. T Rating is 2 hr when HIP devices are used. W-Rating is applicable when (Config A) HIP devices are installed is used or (Config B) when the optional Mildbody seal (ca5 or A) is installed on the TB device.

3. **Waste/Overflow Fitting** — Nom 1-1/2 in. (38 mm) diam Schedule 40 polyvinyl chloride (PVC) or Schedule 40 ABS waste/overflow fitting and drain pipe cemented together and inserted through base of tub box. Conf A. Drain pipe of waste/overflow fitting secured in top (optional) of tub box base using drain seal bushing supplied with firestop device or waste/overflow fitting inserted through tub box side or base. Conf B. Drain pipe of waste/overflow fitting secured in top or bottom of tub box base using drain seal bushing supplied with firestop device.

3A. **Alternate Waste/Overflow Fitting** — (Not Shown) — Nom 1- 1/2 in. (38 mm) diam thin-wall PVC waste/overflow fitting and drain tube inserted in and secured to top of tub box base using drain seal bushing supplied with firestop device.

4. **Drain Piping** — Nom 1-1/2 in. (38 mm) or 2 in. (51 mm) diam Schedule 40 PVC, Schedule 40 ABS, cast iron or copper drain piping with the appropriate fitting/bushings for connection to the waste/overflow fitting. When alternate thin-wall PVC waste/overflow fitting (Item 3A) is used in Conf B, nom 2 in. (51 mm) diam PVC pipe cemented into bottom of tub box base for connection to P-trap. Drain piping rigidly supported away from tub box with suitable hangers.

D4	SYSTEM NO.F-A-2183
A881	N.T.S.

System No. F-C-2310

January 15, 2015

F Ratings — 1 and 2 Hr (See Item 1)

T Ratings — 1 and 1-1/2 Hr (See Item 1)

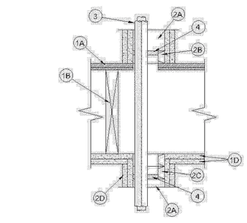

1. **Floor-Ceiling Assembly** — The 1 or 2 hr fire-rated solid or trussed lumber joist floor-ceiling assembly shall be constructed of the materials and in the manner specified in the individual L500 Series Floor-Ceiling Designs in the UL Fire Resistance Directory. **The F Rating of the firestop system is equal to the rating of the floor-ceiling and wall assemblies. The T Rating of the firestop system is 1 hr for 1 hr rated floor-ceiling and wall assemblies and 1-1/2 hr for 2 hr rated floor-ceiling and wall assemblies.** The general construction features of the floor-ceiling assembly are summarized below:

A. **Forming Material** — Lumber or plywood subfloor with finish floor or lumber, plywood or Floor Topping Mixture* as specified in the individual Floor-Ceiling Design. Max diam of floor opening is 3 in. (76 mm).

B. **Wood Joists*** — For 1 hr fire-rated floor-ceiling assemblies nom 10 in. (254 mm) deep (or deeper) lumber, steel or combination lumber and steel joists, trusses or **Structural Wood Members*** with bridging as required and with ends firestopped. For 2 hr fire-rated floor-ceiling assemblies, nom 2 by 10 in. (51 by 254 mm) lumber joists spaced 16 in. OC with nom 1 by 3 in. (25 by 76 mm) lumber bridging and with ends firestopped.

C. **Furring Channels** — (Not Shown) — (As required) - Resilient galvanized steel furring channels in accordance with the manner specified in the individual L500 Series Designs in the Fire Resistance Directory.

D. **Gypsum Board*** — Thickness, type, number of layers and fasteners shall be as specified in the individual Floor-Ceiling Design. Max diam of opening is 3 in. (76 mm).

2. **Chase Wall** — (Optional) - The 1 or 2 hr fire-rated single wood stud/gypsum wallboard chase wall shall be constructed of the materials and in the manner specified in the individual L200 Series Wall and Partition Designs in the UL Fire Resistance Directory and shall include the following construction features:

A. **Studs** — Nom 2 by 4 in. (51 by 102 mm) lumber studs.

B. **Sole Plate** — Nom 2 by 4 in. (51 by 102 mm) lumber plates.

C. **Top Plate** — The double top plate shall consist of two nom 2 by 4 in. (51 by 102 mm) lumber plates. Max diam of opening is 3 in. (76 mm).

D. **Gypsum Board** — Thickness, type, number of layers and fasteners shall be as specified in individual Wall and Partition Design.

3. **Through-Penetrants** — Nom 1 in. (25 mm) diam (or smaller) SDR 9 (or heavier) cross-linked polyethylene (PEX) tubing for use in closed (process or supply) piping systems. A max of three tubes may be installed in the annulus opening. The annular space between the tubing and the periphery of the opening shall be a min of 3/16 in. (5 mm) to a max of 1 in. (25 mm). The space between the tubes shall be a min of 0 in. (point contact) to a max of 1/4 in. (6 mm). Tubing to be rigidly supported on both sides of the floor-ceiling assembly.

4. **Fill, Void or Cavity Material*** — **Sealant** — Min 3/4 in. (19 mm) thickness of fill material applied within the annulus, flush with top surface of floor or sole plate and a min 3/4 in. (19 mm) thickness of fill material applied within the annulus, flush with the bottom surface of the lower top plate. Min 5/8 in. (16 mm) thickness of fill material applied within the annulus, flush with the bottom surface of the ceiling or lower top plate.
HILTI CONSTRUCTION CHEMICALS, DIV OF HILTI INC — FS-ONE Sealant or FS-ONE-MAX Intumescent Sealant

A4	SYSTEM NO.F-C-2310
A881	N.T.S.

System No. F-C-7036

January 20, 2015

ANSI/UL1479 (ASTM E814)	CAN/ULC S115
F Ratings — 1 and 2 Hr (See Item 1)	F Ratings — 1 and 2 Hr (See Item 1)
T Ratings — 1 and 2 Hr (See Item 1)Hr	FT Ratings — 1 and 2 Hr (See Item 1)
	FH Ratings — 1 and 2 Hr (See Item 1)r
	FTH Ratings — 1 and 2 Hr (See Item 1)

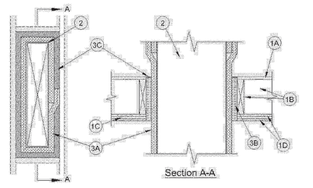

Section A-A

1. **Floor-Ceiling Assembly** — The 1 or 2 hr fire rated solid or trussed lumber joist floor-ceiling assembly shall be constructed of the materials and in the manner specified in the individual L500 Series Floor-Ceiling Designs in the UL Fire Resistance Directory. The 2 hr fire rated wood joist floor-ceiling assembly shall be constructed of the materials and in the manner specified in Design No. L505, L511 or L536 in the UL Fire Resistance Directory. The general construction details of the floor-ceiling assembly are summarized below:

A. **Flooring System** — Lumber or plywood subfloor with finish floor of lumber, plywood or **Floor Topping Mixture*** as specified in the individual Floor-Ceiling Design. Max area of floor opening is 435 sq in. (0.28 m^2) with a max dimension of 30 in. (762 mm).

B. **Wood Joists** — For 1 hr fire rated floor-ceiling assemblies nom 10 in. (254 mm) deep (or deeper) lumber, steel or combination lumber and steel joists, trusses or **Structural Wood Members*** with bridging as required and with ends firestopped. For 2 hr fire rated floor-ceiling assemblies, nom 2 by 10 in. (51 by 254 mm) lumber joists spaced 16 in. (406 mm) OC with nom 1 by 3 in. (25 by 76 mm) lumber bridging and with ends firestopped. Additional framing member to be installed to form a rectangular opening around the through penetrant.

C. **Furring Channels** — In 2 hr fire rated assemblies, resilient galv steel furring installed perpendicular to wood joists between first and second layers of gypsum board (Item 1D). Furring channels spaced max 24 in. (610 mm) OC. When required as specified in the individual 1 hr fire rated Floor-Ceiling Design, resilient galv steel furring installed perpendicular to wood joists between gypsum board and wood joists. Furring channels spaced max 24 in. (610 mm) OC. If furring channels are used within the assembly, additional furring channels to be installed around the periphery of the opening.

D. **Gypsum Board*** — Nom 4 ft (1.2 m) wide by 5/8 in. (16 mm) thick as specified in the individual Floor-Ceiling Design. First layer of gypsum board secured to wood joists or furring channels as specified in the individual Floor-Ceiling Design. Second layer of gypsum board (2 hr fire rated assembly) screw-attached to furring channels as specified in the individual Floor-Ceiling Design. Max area of ceiling opening is 435 sq in. (0.28 m^2) with a max dimension of 30 in. (762 mm).

The hourly F and T Ratings of the firestop system are equal to the hourly fire rating of the floor-ceiling in which it is installed.

2. **Steel Duct** — One steel duct to be centered within the firestop system. Steel duct to be rigidly supported on both sides of floor-ceiling assembly. The following types of steel ducts may be used:

A. **Steel Air Duct** — Min 26 gauge (0.5 mm) galv steel duct having a max perimeter dimension of 63 in. (1.6 m) and a max individual dimension of 24 in. (610 mm).

B. **Steel Grease Duct** — Min 16 gauge (1.5 mm) thick carbon steel duct having a max perimeter dimension of 63 in. (1.6 m) and a max individual dimension of 24 in. (610 mm).

3. **Firestop System** — The firestop system shall consist of the following:

A. **Duct Wrap Materials*** — Nom 1-1/2 in. (38 mm) thick blanket totally encapsulated within foil-scrim facers. The steel grease duct shall be wrapped with two layers of duct wrap installed in accordance with Grease Duct Assembly No. G-18. See **Grease Duct Assemblies** in Vol. 2 of the Fire Resistance Directory. The steel air duct shall be wrapped with one layer of duct wrap installed in accordance with Ventilation Assembly No. V-19. See Ventilation Duct Assemblies in Vol. 2 of the Fire Resistance Directory. The annular space between the insulated steel duct and the periphery of the opening shall be nom 1-1/2 in. (38 mm).
THERMAL CERAMICS INC — FireMaster Fast Wrap+, FireMaster FastWrap XL, or Pyrosat Duct Wrap XL.

B. **Packing Material** — Min 10-3/8 in. (264 mm) and 11-5/8 in. (295 mm) thickness of unfaced scrap duct wrap material compressed 50 percent into opening as a permanent form between the insulated steel duct and the periphery of the opening for 1 and 2 hr fire rated floor-ceiling assemblies, respectively. At point contact location between overlap of duct wrap material and floor-ceiling assembly, packing material shall be firmly packed to max extent possible on both sides of the floor-ceiling assembly. Packing material to be installed flush with bottom surface of ceiling and recessed from top surface of floor to accommodate the required thickness of fill material.

C. **Fill, Void or Cavity Material*** — **Sealant** — Min 1/4 in. (6 mm) thickness of fill material applied within annulus on top surface of floor. A min 1/4 in. (6 mm) diam bead of sealant shall be applied at the plywood floor/insulated steel duct interface on both surfaces of floor-ceiling assembly.
EGS NELSON FIRESTOP — ES1399 or LBS3 Sealant

HILTI CONSTRUCTION CHEMICALS, DIV OF HILTI INC — FS ONE Sealant or FS-ONE MAX Intumescent Sealant

RECTORSEAL — 835+ Sealant, FS 900+ Sealant, FS 1900 Sealant

SPECIFIED TECHNOLOGIES INC — SpecSeal Series SSS Sealant, SpecSeal LC 150 Sealant, SpecSeal LCI Sealant or SpecSeal LE600 Sealant

THERMAL CERAMICS INC — FireMaster Putty

TREMCO INC — Fyre-Sil, TREMstop Acrylic or TREMstop Intumescent Acrylic Sealant, FyreCaulk or TREMstop IA+

A5	SYSTEM NO. F-C-7036
A881	N.T.S.

GYPSUM ASSOCIATION

GA-234-2016
CONTROL JOINTS FOR FIRE-RESISTANCE RATED SYSTEMS

Control joints in gypsum panel product systems shall be installed where indicated on the plans or specifications. Control joints assist in relieving stresses in assemblies that can result in gypsum board joint cracks and ridging. Gypsum Association and manufacturer's recommendations specify minimum requirements for the installation of control joints. Control joints in the gypsum panel systems shall be specified by the architect or designer where any of the conditions listed below exist.

1. A partition, wall, or ceiling traverses a construction joint (expansion, seismic, or building control element) in the base building structure.
2. Where a wall or partition runs in an uninterrupted straight plane exceeding 30 ft (9 m) in length and total area between control joints does not exceed 900 ft^2 (81 m^2).
NOTE: Full height door frames may be considered a control joint.
3. Interior Ceilings With Perimeter Relief: Control joints shall be installed so that linear dimensions between control joints shall not exceed 50 ft (15 m) and total area between control joints does not exceed 2500 ft^2 (225 m^2).
4. Interior Ceilings Without Perimeter Relief: Control joints shall be installed so that linear dimensions between control joints shall not exceed 30 ft (9 m) and the total area between control joints does not exceed 900 ft^2 (81 m^2).
5. Exterior Ceilings and Soffits: Control joints shall be installed so that linear dimensions between control joints shall not exceed 30 ft (9 m) and total area between control joints does not exceed 900 ft^2 (81 m^2).
6. Control joints or intermediate blocking shall be installed where ceiling framing members change direction.
7. A control joint is desired or incorporated as a design accent or architectural feature.

The methods shown for protecting control joints in 1-hour floor-ceiling systems, either direct-attached, furred, or suspended, are applicable to all 1-hour floor ceiling systems with either wood or metal framing including, but not limited to, dimensional lumber, wood trusses, wood I-beams, steel bar joists, and steel channel joists.

Individual gypsum panel strips applied behind control joints in ceiling systems shall be not less than the shorter of 48 in. (1200 mm) or the entire length of the control joint.

1-HOUR WALL & PARTITION SYSTEMS

1-HOUR WOOD FRAMED (WHI-647-3024, 9-20-90)

1-HOUR NONCOMBUSTIBLE (WHI-647-3024, 9-20-90)

2-HOUR WALL & PARTITION SYSTEMS

2-HOUR WOOD FRAMED (WHI-647-3024, 9-20-90)

System No. W-J-1286

September 18, 2017

ANSI/UL1479 (ASTM E814)	CAN/ULC S115
F Rating — 3 Hr	F Rating — 3 Hr
T Rating — 0 Hr	FT Rating — 0 Hr
	FH Rating — 3 Hr
	FTH Rating — 0 Hr

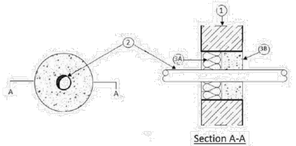

Section A-A

1. **Wall Assembly—** Min. 4-1/2 in. (115 mm) thick lightweight or normal weight (100-150 pcf or 1600 - 2400 kg/m^3) concrete. Wall may also be constructed of any UL Classified **Concrete Blocks***. Opening shall be rectangular or circular with max dimensions of 5-1/4 in. (132 mm).
See **Concrete Blocks** (CAZT) in the Fire Resistance Directory for names of manufacturers.

2. **Pipes/ Tubes—** Single to be installed within the opening. The annular space between the pipes and the periphery of the opening to be 2 in (50 mm). Pipes to be rigidly supported on both sides of the wall assembly. The following pipes/ conduits may be used:

A. Max 1-1/4 in. (32 mm) diameter Schedule M (or heavier) copper pipe for use in closed (process or supply) or vented (drain, waste or vent) piping systems.

B. Max 1-1/4 in. (32 mm) diameter Schedule 5 (or heavier) steel pipe for use in closed (process or supply) or vented (drain, waste or vent) piping systems.

3. **Through-Penetration Firestop System—** The Through-Penetration Firestop System shall consist of the following:

A. Packing material— Nom. 3-3/8 in. (80 mm) thick mineral wool board min. 8.3 pcf (150 kg/m^3), firmly packed into the opening of the wall as a permanent form flush to one face of the wall.

B. Fill, Void or Cavity Material*— Mortar - Nom 2-1/8 in. (55 mm) cast in to aperture in the wall flush to one face of the wall and around the services.
SYT BRANDSCHUTZ WERKSBESELSELLSCHAFT MBH INTERNATIONAL — PYRO-SAFE NOVASET-VGM

E1	SYSTEM NO. W-J-1286
A882	N.T.S.

System No. W-J-2178

May 20, 2014

ANSI/UL1479 (ASTM E814)	CAN/ULC S115
F Rating — 2 Hr	F Rating — 2 Hr
T Rating — 1-3/4 and 2 Hr (See Item 2)	FT Rating — 1-3/4 and 2 Hr (See Item 2)
	FH Rating — 2 Hr
	FTH Rating — 1-3/4 and 2 Hr (See Item 2)

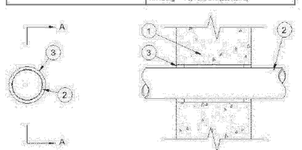

Section A-A

System tested with a pressure differential of 10 Pa between the exposed and the unexposed surfaces with the higher pressure on the exposed side.

1. **Wall Assembly—** Min 4-1/2 in. (114 mm) thick reinforced lightweight or normal weight (100-150 pcf or 1600-3400 kg/m^3) concrete. Wall may also be constructed of any UL Classified **Concrete Blocks***. Max diam of opening is 3 in. (76 mm).

2. **Through Penetrant—** One nonmetallic pipe or conduit to be installed either concentrically or eccentrically within the firestop system. Pipe or conduit to be rigidly supported on both sides of wall assembly. The following types and sizes of nonmetallic pipes or conduit may be used:

A. **Polyvinyl Chloride (PVC) Pipe —** Nom 2 in. (51 mm) diam (or smaller) PS 100 PVC pipe for use in closed (process or supply) or vented (drain, waste or vent) piping system. The annular space shall be min 1/4 in. (6 mm) to max 3/4 in. (19 mm). **The T and FTH Ratings are 2 hr for PS 100 PVC pipe.**

B. **Chlorinated Polyvinyl Chloride (CPVC) Pipe —** Nom 2 in. (51 mm) diam (or smaller) SDR 13.5 CPVC pipe for use in closed (process or supply) piping system. The annular space shall be min 1/4 in. (6 mm) to max. 3/4 in. (19 mm). **The T and FTH Ratings are 2 hr for SDR 13.5 CPVC pipe.**

C. **Rigid Electrical Nonmetallic Conduit (RNMC)—** Nom 2 in. (51 mm) (or smaller) PVC conduit installed in accordance with the National Electrical Code (NFPA 70), the annular space shall be min 1/4 in. (6 mm) to max 3/4 in. (19 mm). **The T and FTH Ratings are 2 hr for RNMC PVC conduit.**

D. **Polyvinyl Chloride (PVC) Pipe—** Nom 2 in. (51 mm) diam (or smaller) Schedule 40 PVC pipe for use in closed (process or supply) or vented (drain, waste or vent) piping system. The annular space for Schedule 40 PVC pipe shall be min 0 in. (point contact) to max 3/4 in. (19 mm). **The T and FTH Ratings are 1-3/4 hr for Schedule 40 PVC pipe.**

3. **Fill, Void or Cavity Material* - Sealant—** Min 5/8 in. (16mm) thickness of fill material applied within the annulus, flush with both surfaces of wall. At point contact location between Schedule 40 PVC pipe and concrete, a min 1/2 in. (13 mm) diam bead of fill material shall be applied at pipe/concrete interface on both sides of wall.
RECTORSEAL — Metkaulk 1100 or Metkaulk 3100

C1	SYSTEM NO. W-J-2178
A882	N.T.S.

System No. W-J-2267

August 09, 2017

F Rating — 2Hr

T Rating — 2 Hr

L Rating at Ambient — Less than 1 CFM/Opening

L Rating At 400 F — Less than 1 CFM/Opening

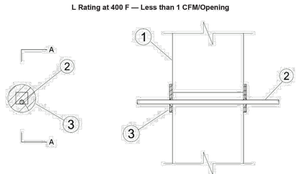

SECTION A-A

1. **Wall Assembly —** Min 6 in. (152 mm) thick lightweight or normal weight (100-150 pcf or 1600-2400 kg/m^3) concrete. Wall may also be constructed of any UL Classified **Concrete Blocks***. Opening may be round, rectangular or irregular with a max diam or dimension of 1 in. (25 mm).

See **Concrete Blocks** (CAZT) in the Fire Resistance Directory for names of manufacturers.

2. **Through Penetrants —** One nonmetallic duct or tube to be installed either concentrically or eccentrically within the firestop system. The annular space between penetrant and the periphery of the opening shall be min 0 in. (point contact) to max 1/2 in. (13 mm). The following types and sizes of nonmetallic pipes may be used:

A. **Microduct* —** One nom 1/2 in. (12.7 mm) diam (or smaller) Durashanex/Riser micro duct with min 0.057 in. (1.45 mm) wall thickness for use in closed (process or supply) piping systems. Microduct to be installed concentrically or eccentrically within the firestop system. The annular space between the microduct and the periphery of the opening shall be min 0 in. (point contact). Microduct to be rigidly supported on both sides of wall. See Optical Fiber/Communications/Signaling/Coaxial Cable Raceway (QAZM) category for certification.
A-D-Technologies — Dura-Line Riser Rated MicroDuct

B. **PEX Tubing —** One nom 3/4 in. (19 mm) diam (or smaller) SDR 9 PEX tubing for use in closed (process or supply) piping systems. Tubing to be rigidly supported on both sides of wall.

3. **Fill, Void or Cavity Material* —** Nom 60 mm diam by 3 mm thick putty disc with one seam at radius. Paper-backer of disc to be removed and disc firmly pressed around the penetrant lapping nom 5 mm onto penetrant to completely cover opening and firmly pressed to lap onto the wall around periphery of opening. Disc seam to be firmly pressed and sealed tight. Disc to be installed at both surfaces of wall.
HILTI CONSTRUCTION CHEMICALS, DIV OF HILTI INC — CFS-D 1" Firestop Cable Disc

A1	SYSTEM NO. W-J-2267
A882	N.T.S.

System No. W-J-7021

January 23, 2015

ANSI/UL1479 (ASTM E814)	CAN/ULC S115
F Ratings —1 and 2 Hr (See Item 1)	F Ratings —1 and 2 Hr (See Item 1)
T Rating — 0 Hr	FT Rating— 0 Hr
L Rating at Ambient — Less Than 1 CFM/sq ft	FH Ratings — 1 and 2 Hr (See Item 1)
L Rating at 400 F — Less Than 1 CFM/sq ft	FTH Rating — 0 Hr
	L Rating at Ambient — Less Than 1 CFM/sq ft
	L Rating at 400 F — Less Than 1 CFM/sq ft

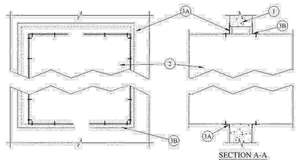

SECTION A-A

1. **Wall Assembly —** Min 4-3/4 in. and 6 in. (121 and 152 mm) thick reinforced lightweight or normal weight (100-150 pcf or 1600-2400 kg/m^3) concrete for 1 and 2 hr ratings , respectively. Wall may also be constructed of any UL Classified **Concrete Blocks***. Max area of opening is 1300 in. (8387 cm^2) with a max dimension of 50 in. (1270 mm).
See **Concrete Blocks** (CAZT) category in the Fire Resistance Directory for names of manufacturers.

2. **Steel Duct —** Nom 24 in. by 48 in. (610 by 1219 mm) (or smaller) No. 24 gauge (or heavier) galv steel duct to be installed within the firestop system. The annular space shall be min 0 (point contact) in. to a max 2 in. (51 mm). Duct to be rigidly supported on both sides of the wall assembly

3. **Firestop System —** The firestop system shall consist of the following:

A. **Fill, Void or Cavity Material*—Sealant —** Min 5/8 in. (16 mm) thickness of fill material applied within annulus flush with both surfaces of wall. At point contact location, a min 1/2 in. (13 mm) diam bead of fill material shall be applied to the wall/duct interface on both surfaces of wall.
HILTI CONSTRUCTION CHEMICALS, DIV OF HILTI INC — FS-ONE Sealant, FS-ONE MAX Intumescent Sealant, CP601S Elastomeric Firestop Sealant, CFS-S-SIL GG Sealant or CP606 Flexible Sealant.

B. **Steel Retaining Angle —** Min No. 18 MSG (0.048 in.) galv steel angles cut to fit contour of duct with a 2 in. overlap on the duct and a min 1 in. (25 mm) overlap on the gypsum board assembly on both surfaces of wall. 2 in. (51 mm) leg of angle secured to duct with min No. 8 by 3/4 in. (19 mm) long sheet metal screws, spaced a max of 6 in. (152 mm) OC.

D2	SYSTEM NO. W-J-7021
A882	N.T.S.

System No. W-L-1001

June 15, 2005

F Ratings — 1, 2, 3 and 4 Hr (See Items 2 and 3)

T Ratings — 0, 1, 2, 3, and 4 Hr (See Item 3)

L Rating At Ambient — less than 1 CFM/sq ft

L Rating At 400 F — less than 1 CFM/sq ft

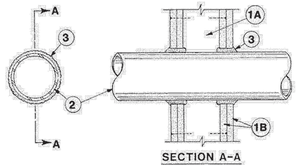

SECTION A–A

1. **Wall Assembly —** The 1, 2, 3 or 4 hr fire-rated gypsum wallboard/stud wall assembly shall be constructed of the materials and in the manner described in the individual U300 or U400 Series Wall or Partition Designs in the UL Fire Resistance Directory and shall include the following construction features:

A. **Studs —** Wall framing may consist of either wood studs (max 2 h fire rated assemblies) or steel channel studs. Wood studs to consist of nom 2 by 4 in. (51 by 102 mm) lumber spaced 16 in. (406 mm) OC with nom 2 by 4 in. (51 by 102 mm) lumber end plates and cross braces. Steel studs to be min 3-5/8 in. (92 mm) wide by 1-3/8 in. (35 mm) deep channels spaced max 24 in. (610 mm) OC.

B. **Gypsum Board* —** Nom 1/2 or 5/8 in. (13 or 16 mm) thick, 4 ft. (122 cm) wide with square or tapered edges. The gypsum board type, thickness, number of layers, fastener type and sheet orientation shall be as specified in the individual U300, U400 or U400 Series Design in the UL Fire Resistance Directory. Max diam of opening is 26 in. (660 mm).

2. **Through-Penetrant —** One metallic pipe, conduit or tubing installed either concentrically or eccentrically within the firestop system. The annular space between pipe, conduit or tubing and periphery of opening shall be min of 0 in / (0 mm). (point contact) to max 2 in. (51 mm) Pipe, conduit or tubing to be rigidly supported on both sides of wall assembly. The following types and sizes of metallic pipes, conduits or tubing may be used:

A. **Steel Pipe —** Nom 24 in. (610 mm) diam (or smaller) Schedule 10 (or heavier) steel pipe.

B. **Iron Pipe —** Nom 24 in. (610 mm) diam (or smaller) service weight (or heavier) cast iron soil pipe, nom 12 in (305 mm) diam (or smaller) or Class 50 (or heavier) ductile iron pressure pipe.

C. **Conduit —** Nom 6 in. (152 mm) diam (or smaller) steel conduit or nom 4 in (102 mm) diam (or smaller) steel electrical metallic tubing

D. **Copper Tubing —** Nom 6 in. (152 mm) diam (or smaller) Type L (or heavier) copper tubing

E. **Copper Pipe —** Nom 6 in. (152 mm) diam (or smaller) Regular (or heavier) copper pipe.

F. **Through Penetrating Product* —** Flexible Metal Piping The following types of steel flexible metal gas piping may be used:

1. Nom 2 in. (51 mm) diam (or smaller) steel flexible metal gas piping. Plastic covering on piping may or may not be removed on both sides of floor or wall assembly.
OMEGA FLEX INC

2. Nom 1 in. (25 mm) diam (or smaller) steel flexible metal gas piping. Plastic covering on piping may or may not be removed on both sides of floor or wall assembly.
GASTITE, DIV OF TITEFLEX

3. Nom 1 in. (25 mm) diam (or smaller) steel flexible metal gas piping. Plastic covering on piping may or may not be removed on both sides of floor or wall assembly.
WARD MFG L L C

3. **Fill, Void or Cavity Material* — Caulk or Sealant —** Min 5/8 , 1-1/4, 1-7/8 and 2-1/2 in. (16, 32, 48 and 64 mm) thickness of caulk for 1, 2, 3 and 4 hr rated assemblies, respectively, applied within annulus, flush with both surfaces of wall. Min 1/4 in. (6 mm) diam bead of caulk applied to gypsum board/penetrant interface at point contact location on both sides of wall. The hourly F Rating of the firestop system is dependent upon the hourly fire rating of the wall assembly in which it is installed, as shown in the following table. The hourly T Rating of the firestop system is dependent upon the type or size of the pipe or conduit and the hourly fire rating of the wall assembly in which it is installed, as tabulated below:

Max Pipe or Conduit Diam In (mm)	F Rating Hr	T Rating Hr	
1 (25)	1 or 2	0+, 1 or 2	
1 (25)	3 or 4	3 or 4	
4 (102)	1 or 2	0	
6 (152)	3 or 4	0	
12 (305)	1 or 2	0	

+When copper pipe is used, T Rating is 0 h.
3M COMPANY — CP 25WB+ or FB-3000 WT.

A2	SYSTEM NO. W-L-1001
A882	N.T.S.

System No. W-L-1006

September 24, 1994

F Rating — 2 Hr

T Rating — 0 Hr

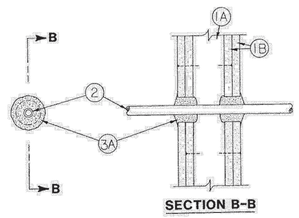

SECTION B–B

1. **Wall Assembly —** The fire-rated gypsum wallboard/stud wall assembly shall be constructed of the materials and in the manner specified in the individual U300 or U400 Series Wall and Partition Designs in the UL Fire Resistance Directory and shall include the following construction features:

A. **Studs —** Wall framing may consist of either wood studs or steel channel studs. Wood studs to consist of nom 2 by 4 in. lumber spaced 16 in. OC. Steel studs to be min 2-1/2 in. wide and spaced max 24 in. OC.

B. **Gypsum Board* —** Two layers of nom 5/8 in. thick gypsum wallboard, as specified in the individual Wall and Partition Design. Max diam of opening is 2 in.

2. **Through Penetrants —** One metallic pipe, conduit or tubing to be centered within the firestop system. Pipe, conduit or tubing to be rigidly supported on both sides of wall assembly. The following types and sizes of metallic pipe, conduit or tubing may be used:

A. **Steel Pipe —** Nom 1 in. diam (or smaller) Schedule 5 (or heavier) steel pipe. A nom annular space of 5/16 in. is required within the firestop system.

B. **Conduit —** Nom 1 in. diam (or smaller) steel electrical metallic tubing or rigid steel conduit. A nom annular space of 5/16 in. is required within the firestop system.

C. **Copper Tubing —** Nom 1 in. diam (or smaller) Type L (or heavier) copper tubing. A nom annular space of 5/16 in. is required within the firestop system.

D. **Copper Pipe —** Nom 1 in. diam (or smaller) Regular (or heavier) copper pipe. A nom annular space of 5/16 in. is required within the firestop system.

3. **Firestop System —** The firestop system shall consist of the following:

A. **Fill, Void or Cavity Material* — Putty —** Min 1-1/2 in. thickness of fill material applied within the annulus, on both surfaces of wall. Additional fill material to be installed such that a min 1/8 in. crown is formed around the penetrating item.
EGS NELSON FIRESTOP — Types FSP Putty and FSP Firestop Putty Pads.

D3	SYSTEM NO. W-L-1006
A882	N.T.S.

System No. W-L-2001

January 08, 2010

F Rating — 2 Hr

T Rating — 2 Hr

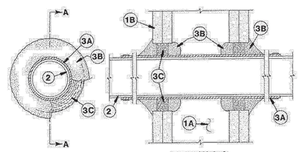

SECTION A–A

1. **Wall Assembly —** The fire-rated gypsum board/stud wall assembly shall be constructed of the materials and in the manner specified in the individual U300 or U400 Series Wall and Partition Designs in the UL Fire Resistance Directory and shall include the following construction features:

A. **Studs —** Wall framing may consist of either wood studs or steel channel studs. Wood studs to consist of nom 2 by 4 in. lumber spaced 16 in. OC. Steel studs to be min 2-1/2 in. wide and spaced max 24 in. OC.

B. **Gypsum Board* —** Two layers of nom 5/8 in. thick gypsum board, as specified in the individual Wall and Partition Design. Max diam of opening is 3-1/4 in.

2. **Rigid Nonmetallic Conduit+ or Electrical Nonmetallic Tubing+ —** Max 2 in. diam rigid nonmetallic conduit (Schedule 40 or Schedule 80) or max 1 in. diam electrical nonmetallic tubing centered in the opening and rigidly supported on both sides of assembly.
See **Rigid Nonmetallic Conduit** (DZKT) or **Electrical Nonmetallic Tubing** (FKHU) categories in the Electrical Construction Materials Directory for names of manufacturers.

The size of the opening is dependent upon the diam and type of penetrating item as shown below:

Type of Penetrating Item	Penetrating Item Identification
Rigid Nonmetallic Conduit	A
Electrical Nonmetallic Tubing	B

Diam of Penetrating Item In.	Penetrating Item Identification	Diam of Opening In.
1/2	A and B	1-5/8
3/4	A and B	1-3/4
1	A and B	2-1/4
1-1/4	A	2-3/4
1-1/2	A	2-3/4
2	A	3-1/4

3. **Firestop System —** The firestop system shall consist of the following:

A. **Fill, Void or Cavity Material — Blanket —** Blanket tightly wrapped twice around the penetrating item. Each wrap of blanket shall extend a min of 5 in. from each surface of the assembly. The blanket shall be secured to the penetrating item by means of steel hose clamps.
RECTORSEAL — Type CF Blanket

B. **Fill, Void or Cavity Material* — Sealant —** Prior to the installation of the packing material (Item 3C) min 3/4 in. thickness of fill material applied within annulus on both sides of wall. Fill Material recessed from both sides of wall as required to accommodate the required thickness of packing material and additional layer of fill material. After installation of packing material an additional 1/4 in. thickness of fill material applied within annulus flush with both surfaces of wall. Additional fill material to be installed to form a 1 in. crown around the penetrating item and lapping 1 in. beyond periphery of opening of wall.
RECTORSEAL — Types FS500, FS501, FS503, FS505, FS529, FST601, FST603, FST605, RFS500, RFS501, RFS505, RFST601 and RFST605

C. **Packing Material —** Min 1/2 in. loose ceramic fiber min 6 pcf firmly packed into opening as a permanent form. Packing material to be recessed from both sides of wall as required to accommodate the required thickness of fill material.

+Bearing the UL Listing Mark

C4	SYSTEM NO. W-L-2003
A882	N.T.S.

System No. W-L-2088

May 23, 2005

F Ratings— 1 and2 Hr (See Item 1)

T Ratings— 0, 1 and 2 Hr (See Item 2)

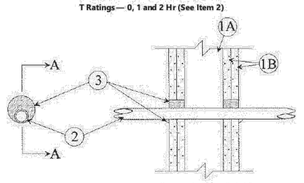

SECTION A-A

1. **Wall Assembly—** The 1 or 2 hr fire-rated gypsum board/stud wall assembly shall be constructed of the materials and in the manner specified in the individual U300, U400, V400 or W400 Series Wall and Partition Designs in the UL Fire Resistance Directory and shall include the following construction features:

A. **Studs—** Wall framing may consist of either wood studs or steel channel studs. Wood studs to consist of nom 2 by 4 in. (51 by 102 mm) lumber spaced 16 in. (406 mm) OC. Steel studs to be min 3-1/2 in. (89 mm) wide and spaced max 24 in. (610 mm) OC.

B. **Gypsum Board*—** Thickness, type, number of layers and fasteners as required in the individual Wall and Partition Design. Diam of opening shall be 7/8 in. (22 mm) larger than the outside diam of nonmetallic pipe or conduit (Item 2). **The hourly F Rating of the firestop system is equal to the hourly fire rating of the wall assembly in which it is installed.**

2. **Through Penetrants—** One nonmetallic pipe or conduit to be installed either concentrically or eccentrically within the firestop system. The annular space for max 1-1/4 in. (32 mm) diam pipe or conduit shall be min 0 in. (0 mm, point contact) to max 7/8 in (22 mm). The annular space for pipe or conduit larger than nom 1-1/4 in. (32 mm) diam shall be min 1/2 in. (13 mm) to max 1 in. (25 mm) Pipe or conduit to be rigidly supported on both sides of wall assembly. The following types and sizes of nonmetallic pipes or conduits may be used:

A. **Polyvinyl Chloride (PVC) Pipe —** Nom 2 in. (51 mm) diam (or smaller) Schedule 40 solid core or cellular core PVC pipe for use in closed (process or supply) or vented (drain, waste or vent) piping system.

B. **Polyvinyl Chloride (PVC) Pipe—** Nom 3 in. (76 mm) diam (or smaller) Schedule 40 solid core PVC pipe for use in closed (process or supply) piping system.

C. **Chlorinated Polyvinyl Chloride (CPVC) Pipe—** Nom 3 in. (76 mm) diam (or smaller) SDR11 CPVC pipe for use in closed (process or supply) piping systems.

D. **Rigid Nonmetallic Conduit+ +—** Nom 3 in. (76 mm) diam (or smaller) Schedule 40 PVC conduit installed in accordance with the National Electrical Code (NFPA No 70).

E. **Electrical Nonmetallic Tubing (ENT) + +—** Nom 1 in. (25 mm) diam (or smaller) ENT formed of PVC, installed in accordance with the National Electrical Code (NFPA No. 70).
See **Rigid Nonmetallic Conduit** (DZCT) and **Electrical Nonmetallic Tubing** (FKHU) categories in the UL Electrical Construction Directory for names of manufacturers.

F. **Acrylonitrile Butadiene Styrene (ABS) Pipe—** Nom. 3 in. (76 mm) diam (or smaller) Schedule 40 solid core or cellular core ABS pipe for use in closed (process or supply) or vented (drain, waste or vent) piping systems.
The hourly T Rating is dependent on the hourly rating of the wall assembly, the pipe or conduit size and whether the pipe is intended for use as a closed or vented system, as shown in the following table.

Nom Pipe Diam In.	Wall Assembly Rating Hr	Closed (c) or Vented (v)	T Rating Hr
1/2 to 3 (13 to 76)	1	c	1
1/2 to 1-1/4 (13 to 32)	1	v	1
1/2 to 1-1/4 (13 to 32)	2	c	2
1/2 to 1-1/4 (13 to 32)	2	v	1
2 (51)	1	v	0
2 (51)	2	v	0

3. **Fill, Void or Cavity Materials* — Caulk, Sealant or Putty —** Min thickness of 5/8 in. (16 mm) and 1-1/4 in. (32 mm) of caulk or putty for 1 and 2 hr rated wall assemblies, respectively, applied within annulus between pipe or conduit and periphery of the opening, flush with both surfaces of wall assembly. At the point contact location between pipe or conduit and gypsum board, a min 1/2 in. (13 mm) diam bead of caulk or putty shall be applied at the pipe or conduit/ board interface on both surfaces of wall assembly.
3M COMPANY — CP 25WB+, MP+ 3EC II 5399+ caulk or FB-3000 WT sealant (Note: CP 25WB+ not suitable for use with CPVC pipes.)

A4	SYSTEM NO. W-L-2088
A882	N.T.S.

System No. W-L-2335

January 22, 2015

F Rating — 1 and 2 Hr (See Item 1)

T Rating — 3/4, 1 and 1-1/2 Hr (See Item 3)

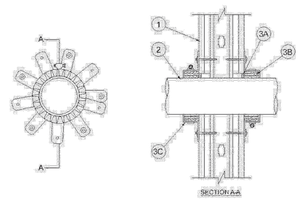

1. **Wall Assembly —** The 1 and 2 hr fire-rated gypsum board/stud wall assembly shall be constructed of the materials and in the manner described in the individual U300, U400, V400 or W400 Series Wall and Partition Design in the UL Fire Resistance Directory and shall include the following construction features:

A. **Studs —** Wall framing shall consist of either wood or steel channel studs. Wood studs to consist of nom 2 by 4 in. (51 by 102 mm) lumber spaced max 16 in. (406 mm) OC. Steel studs to be min 2-1/2 in. (64 mm) wide and spaced max 24 in. (610 mm) OC.

B. **Gypsum Board* —** The gypsum board type, thickness number of layers, fastener type and sheet orientation shall be specified in the individual Wall or Partition Design in the UL Fire Resistance Directory. Max diam of opening is 5 in. (127 mm).
The hourly F Rating of the firestop system is equal to the hourly fire rating of the wall assembly in which it is installed.

2. **Through Penetrants —** One nonmetallic pipe to be installed concentrically or eccentrically within the firestop system. Annular space between pipe and periphery of opening to be min 0 in. (0 mm, point contact) to max 1/2 in. (13 mm). Pipe to be rigidly supported on both sides of floor or wall assembly. The following types and sizes of nonmetallic pipes may be used:

A. **Polyvinyl Chloride (PVC) Pipe —** Nom 4 in. (102 mm) diam (or smaller) Schedule 40 solid or cellular core PVC for use in closed (process or supply) or vented (drain, waste or vent) piping systems.

B. **Chlorinated Polyvinyl Chloride (PVC) Pipe —** Nom 4 in. (102 mm) diam (or smaller) SDR13.5 CPVC for use in closed (process or supply) piping systems.

C. **Acrylonitrile Butadiene Styrene (ABS) Pipe —** Nom 4 in. (102 mm) diam (or smaller) Schedule 40 ABS pipe for use in closed (process or supply) or vented (drain, waste or vent) piping systems.

3. **Firestop System —** Installed symmetrically on both sides of wall assembly. The hourly F and T Ratings for the firestop system are equal to the hourly fire rating of the wall assembly in which it is installed. The details of the firestop system shall be as follows.

A. **Fill, Void or Cavity Materials* — Wrap Strip —** Nom 1/4 in. (6 mm) thick intumescent elastomeric material faced on one side with aluminum foil, supplied in 2 in. (51 mm) wide strips. Nom 2 in. (51 mm) wide strip tightly wrapped around nonmetallic pipe (foil side out) with seam butted. Wrap strip layer securely bound with steel wire or aluminum foil tape and slid into annular space approx 1-1/4 in. (32 mm) such that approx 3/4 in. (19 mm) of the wrap strip protrudes from the wall surface.
3M COMPANY — FS-195+

B. **Fill, Void or Cavity Materials* — Caulk, Sealant or Putty —** Min 5/8 in. (16 mm) thickness of caulk or putty applied into annular space between wrap strip and periphery of opening. A nom 1/4 in. (6 mm) diam bead of caulk or putty to be applied to the wrap strip/wall interface and to the exposed edge of the wrap strip layers approx 3/4 in. (19 mm) from the wall surface.
3M COMPANY — CP 25WB+ caulk or MP+ Stix putty, IC 15WB+ caulk, FireDam 150+ caulk or FB-3000 WT sealant. (Note: L Ratings apply only when Type CP 25WB+ caulk or FB-3000 WT sealant is used. CP 25WB+ and FireDam 150+ not suitable for use with CPVC pipes.)

C. **Foil Tape —** (not shown) — Nom 4 in. (102 mm) wide, 3 mil thick aluminum tape wrapped around pipe prior to the installation of the wrap strip (Item 3A). Min of one wrap, flush with both sides of wall and proceeding outward. Tape is not required for pipes shown in Items 2A, 2B and 2C.

C5	SYSTEM NO. W-L-2335
A882	N.T.S.

System No. W-L-3003

January 26, 1994

F Rating — 2 Hr

T Rating — 2 Hr

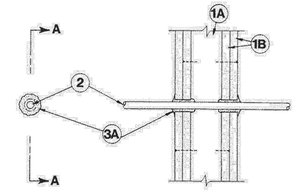

SECTION A–A

1. **Wall Assembly —** The fire-rated gypsum wallboard/stud wall assembly shall be constructed of the materials and in the manner specified in the individual U300 or U400 Series Wall and Partition Designs in the UL Fire Resistance Directory and shall include the following construction features:

A. **Studs —** Wall framing may consist of either wood studs or steel channel studs. Wood studs to consist of nom 2 by 4 in. lumber spaced 16 in. OC. Steel studs to be min 3-5/8 in. wide by 1-3/8 in. deep channels spaced max 24 in OC.

B. **Gypsum Board* —** Two layers of nom 1/2 in. thick gypsum wallboard, as specified in the individual Wall and Partition Design. Max area of opening is 40 sq in. with max dimension of 8 in.

2. **Air Duct —** Nom 4 by 6 in. prefabricated No. 28 MSG galv sheet metal air duct. A min 1/2 to max 1-5/8 in. annular space is required within the firestop system. Air Duct to be rigidly supported on both sides of wall assembly.

3. **Forming Material* —** Mineral wool forming material firmly packed into stud cavity in area of opening as a permanent form. Forming material to be recessed 1 in. from both surfaces of wall to accommodate the required thickness of fill material.
THERMAFIBER INC — Type SAF

4. **Fill, Void or Cavity Material* —** Min 1 in. thickness of fill material applied to fill the annulus, flush with both surfaces of wall. Dry mix material mixed with water at a rate of 2.1 parts dry mix to 1 lb part water, by weight, in accordance with the accompanying installation instructions.
UNITED STATES GYPSUM CO — Type FC

4A. **Fill, Void or Cavity Material* —** Not Shown — Two component fill material used as an alternate to Item 4. Min 1 in. thickness of fill material applied within the annulus, flush with both surfaces of wall. Ready-mixed component mixed with accelerator component at a rate of 66 parts of ready-mixed component to 1 part of accelerator component by weight in accordance with the accompanying installation instructions.
UNITED STATES GYPSUM CO — Type RFC

A5	SYSTEM NO. W-L-3003
A882	N.T.S.

System No. W-L-3001

September 07, 2004

F Ratings — 1 and 2 Hr (See Item 1)

T Ratings — 3/4, 1, 1-1/2 and 2 Hr (See Item 2)

L Rating At Ambient — 15 CFM/sq ft (See Item 3)

L Rating At 400 F — less than 1 CFM/sq ft (See Item 3)

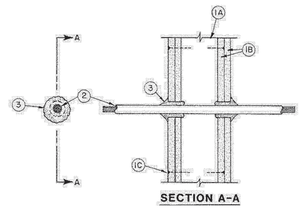

SECTION A–A

1. **Wall Assembly —** The 1 or 2 hr fire-rated gypsum wallboard/stud wall assembly shall be constructed of the materials and in the manner described in the individual U300 or U400 Series Wall or Partition Designs in the UL Fire Resistance Directory and shall include the following construction features:

A. **Studs —** Wall framing may consist of either wood studs or steel channel studs. Wood studs to consist of nom 2 by 4 in. lumber spaced 16 in. OC with nom 2 by 4 in. lumber end plates and cross braces. Steel studs to be min 3-5/8 in. wide by 1-3/8 in. deep channels spaced max 24 in OC.

B. **Gypsum Board* —** Nom 1/2 or 5/8 in. thick, 4 ft wide with square or tapered edges. The gypsum wallboard type, thickness, number of layers and sheet orientation shall be as specified in the individual Wall or Partition Design. Diam of circular through opening to be 3/8 in. to 5/8 in. larger than outside diam of cable or cable bundle.

C. **Fasteners —** When wood stud framing is employed gypsum wallboard layers attached to studs with cement coated nails as specified in the individual Wall or Partition Design. When steel channel stud framing is employed, gypsum wallboard attached to studs with Type S self-drilling, self-tapping bugle-head steel screws as specified in the individual Wall or Partition Design.
The hourly F Rating of the firestop system is equal to the hourly fire rating of the wall assembly in which it is installed.

2. **Cables —** Individual cable or max 1 in. diam cable bundle installed in through opening with an annular space of min 0 in. (point contact) to max 3/4 in. Cable to be rigidly supported on both sides of wall assembly. The following types and sizes of cables may be used:

A. Max 150 pair No. 24 AWG copper conductor telephone cable with polyvinyl chloride (PVC) insulation and jacket materials. **When max 25 pair telephone cable is used, T Rating is 2 hr. When 50 to 150 pair telephone cable is used in 1 hr fire rated wall, T Rating is 3/4 hr. When 50 to 150 pair telephone cable is used in 2 hr fire rated wall, T Rating is 1 hr.**

B. Max No. 10 AWG multiple copper conductor Type NM ("Romex") nonmetallic sheathed cable with PVC insulation and jacket materials. **When Type NM cable is used, max T Rating is 1-1/2 hr.**

C. Multiple fiber optical communication cable jacketed with PVC and having a max outside diam of 5/8 in. **When fiber optic cable is used, max T Rating is 2 hr.**

D. Max 12 AWG multiconductor (max seven conductors) power/control cable with cross-linked polyethylene (XLPE) insulation and XLPE or PVC jacket materials. **When multiconductor power/control cable is used, max T Rating is 2 hr.**

E. Max four conductor with ground No. 2 AWG (or smaller) aluminum SER cables with polyvinyl chloride insulation and jacket materials.

3. **Fill, Void or Cavity Materials* — Caulk, Sealant or Putty —** Caulk or putty fill material installed to completely fill annular space between cable and gypsum wallboard on both sides of wall and with a min 1/4 in. diam bead of caulk or putty applied to perimeter of cable(s) at its egress from each side of the wall.
3M COMPANY — MP+ putty, CP 25WB+ caulk or FB-3000 WT sealant. (Note: L Ratings apply only when Type CP 25WB+ caulk or FB-3000 WT sealant is used.)

C7	SYSTEM NO. W-L-3001
A882	N.T.S.

System No. W-L-7002

December 05, 1997

F Rating — 2 Hr

T Rating — 1/2 Hr

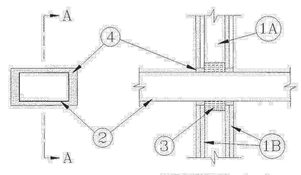

SECTION A–A

1. **Wall Assembly —** The fire-rated gypsum wallboard/stud wall assembly shall be constructed of the materials and in the manner described in the individual U300 or U400 Series Wall and Partition Designs in the UL Fire Resistance Directory and shall include the following construction features:

A. **Studs —** Wall framing may consist of either wood studs or steel channel studs. Wood studs to consist of nom 2 by 4 in. lumber spaced 16 in. OC with nom 2 by 4 in. lumber end plates and cross braces. Steel studs to be min 3-5/8 in. wide by 1-3/8 in. deep channels spaced max 24 in OC.

B. **Gypsum Board* —** Two layers of nom 1/2 in. thick gypsum wallboard, as specified in the individual Wall or Partition Design. Max area of opening is 144 sq in. with max dimension of 18 in.

2. **Air Duct —** Nom 4 by 6 in. prefabricated No. 28 MSG galv sheet metal air duct. A min 1/2 to max 1-5/8 in. annular space is required within the firestop system. Air Duct to be rigidly supported on both sides of wall assembly.

3. **Forming Material* —** Mineral wool forming material firmly packed into stud cavity in area of opening as a permanent form. Forming material to be recessed 1 in. from both surfaces of wall to accommodate the required thickness of fill material.
THERMAFIBER INC — Type SAF

4. **Fill, Void or Cavity Material* —** Min 1 in. thickness of fill material applied to fill the annulus, flush with both surfaces of wall. Dry mix material mixed with water at a rate of 2.1 parts dry mix to 1 lb part water, by weight, in accordance with the accompanying installation instructions.
UNITED STATES GYPSUM CO — Type FC

| A7 | SYST

System No. W-L-7004

May 02, 2005

F Rating — 2 Hr

T Rating — 2 Hr

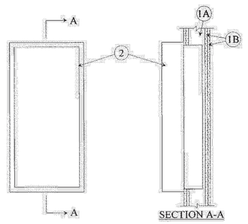

SECTION A-A

1. **Wall Assembly —** The fire-rated gypsum wallboard/stud wall assembly shall be constructed of the materials and in the manner specified in the individual U300 or U400 Series Wall and Partition Designs in the UL Fire Resistance Directory and shall include the following construction features:

A. **Studs —** Wall framing may consist of either wood studs or steel channel studs. Wood studs to consist of nom 2 by 4 in. lumber spaced 16 in. OC. Steel studs to be min 3-5/8 in. wide and spaced max 24 in. OC.

B. **Gypsum Board* —** Two layers of nom 5/8 in. thick gypsum wallboard, as specified in the individual Wall and Partition Design.

2. **Cabinet* —** Fire extinguisher cabinet Installed per manufacturer's installation instructions in max 28-9/16 by 13-9/16 in. wide opening on one side of wall assembly. Max gap between cabinet and wallboard shall be 1/8 in. high.
POTTER-ROEMER L L C

2A. Cabinet*(not shown) — Fire hose, valve and extinguisher cabinets installed per manufacturer's installation instructions in max 46-1/8 in. by 32-1/2 in. wide opening on one side of wall assembly. Max gap between cabinet and wallboard shall be 1/8 in.
POTTER-ROEMER L L C

*** Indicates such products shall bear the UL or cUL Certification Mark for jurisdictions employing the UL or cUL Certification (such as Canada), respectively.**

D3	SYSTEM NO. W-L-7004
A883	N.T.S.

System No. W-L-7009

November 20, 2008

F Ratings — 1 and 2 Hr (See Item 1)

T Rating — 0 Hr

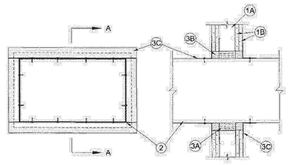

Section A-A

1. **Wall Assembly —** The 1 or 2 hr fire-rated gypsum board/stud wall assembly shall be constructed of the materials and in the manner described in the individual U300, U400 or V400 Series Wall and Partition Design in the UL Fire Resistance Directory and shall include the following construction features:

A. **Studs —** Wall framing may consist of either wood studs or steel channel studs. Wood studs to consist of nom 2 by 4 in. (51 by 102 mm) lumber spaced 16 in. (406 mm) OC. Steel studs to be min 2-1/2 in. (64 mm) wide and spaced max 24 in. (610 mm) OC. The opening in the wall to accommodate the steel duct (Item 2) shall be framed on all sides using lengths of studs installed between the vertical studs and attached to the studs at each end. The framed opening in the wall shall be min 1-1/4 in. (32 mm) to max 3 in. (76 mm) wider and higher than the width and height of the steel duct. When steel studs are used and the width of opening exceeds the width of stud cavity, the opening shall be framed on all sides using lengths of steel stud installed between the vertical studs and screw-attached to the steel studs at each end. The framed opening in the wall shall be 4 in. (102 mm) wider and 4 in. (102 mm) higher than the dimensions of the steel duct such that, when the penetrating item is installed in the opening, a max 2 in. (51 mm) clearance is present between the steel duct and the framing on all four sides.

B. **Gypsum Board* —** 5/8 in. (16 mm) thick, 4 ft (1.2 m) wide with square or tapered edges. The gypsum board type, thickness, number of layers, fastener type and sheet orientation shall be as specified in the individual U300, U400 or V400 Series Design in the UL Fire Resistance Directory. Max area of opening is 188 sq in. (0.12 m^2) with max dimensions of 14-1/2 in. (368 mm) for wood studs. Max area of opening is 325 sq in. (0.21 m^2) with max dimensions of 25 in. (635 mm) for steel studs.
The hourly F Rating of the firestop system is equal to the hourly fire rating of the wall assembly in which it is installed.

2. **Steel Duct —** Max 24 by 12 in. (610 by 305 mm) No. 24 gauge (or heavier) steel duct to be installed vertically or horizontally within the firestop system. The annular space between the steel duct and the periphery of the framed opening shall be min 1/4 in. (6 mm) to max 2 in. (51 mm). Steel duct to be rigidly supported on both sides of wall assembly. The max dimensions of the steel duct is dependent upon the hourly rating of the wall and type of stud used as tabulated below:

Fire Rating of Wall Hr	Type of Stud	Max Dimension of Steel Duct
1	Steel	24 in. by 12 in. (610 by 305 mm)
2	Steel	12 in. by 12 in. (305 by 305 mm)
1	Wood	12 in. by 12 in. (305 by 305 mm)
2	Wood	12 in. by 12 in. (305 by 305 mm)

3. **Firestop System —** The firestop system shall consist of the following:

A. **Packing Material —** Min 2-1/2 in. (64 mm) thickness of min 4 pcf (64 kg/m^3) mineral wool batt insulation firmly packed between framed opening and steel duct as a permanent form. Packing material to be recessed from both surfaces of wall as required to accommodate the required thickness of fill material.

B. **Fill, Void or Cavity Material* — Sealant —** In 2 hr fire rated assemblies, min 1-1/4 in. (32 mm) thickness of fill material applied within the annulus, flush with both surfaces of wall. In 1 hr fire rated assemblies, min 5/8 in. (16 mm) thickness of fill material applied within the annulus on both surfaces of wall.
SPECIFIED TECHNOLOGIES INC — SpecSeal 100, 101,102 or 155 Sealant, SpecSeal LC 150 Sealant, SpecSeal LE600 Sealant, Pensil 300 Sealant or SpecSeal Series SIL300 Sealant

C. **Steel Retaining Angles —** Min 2 by 2 by 0.030 in. (51 by 51 by 0.76 mm) steel angles cut to fit the contour of the steel duct with a 1 in. (25 mm) lap on both surfaces of wall. Angles secured to steel duct with min No. 8 by 3/4 in. (19 mm) long steel sheet metal screws spaced max 4 in. (102 mm) OC.

A3	SYSTEM NO. W-L-7009
A883	N.T.S.

System No. W-L-8013

July 12, 2016

ANSI/UL1479 (ASTM E814)	CAN/ULC S115
F Ratings — 1 and 2 Hr (See Item 1)	F Ratings — 1 and 2 Hr (See Item 1)
T Rating — 0 Hr	FT Rating — 0 Hr
L Rating At Ambient — 5 CFM/sq ft.	FH Ratings — 1 and 2 Hr (See Item 1)
L Rating At 400 F — 2 CFM/sq ft.	FTH Rating — 0 Hr
	L Rating At Ambient — 5 CFM/sq ft.
	L Rating At 400 F — 2 CFM/sq ft.

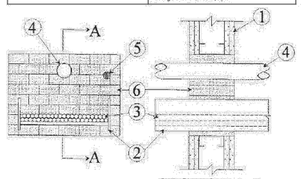

SECTION A-A

System tested with a pressure differential of 2.5 Pa between the exposed and the unexposed surfaces with the higher pressure on the exposed side.

1. **Wall Assembly—** The 1 or 2 hr fire-rated gypsum board/stud wall assembly shall be constructed of the materials and in the manner specified in the individual U300, U400, V400 or W400 Series Wall and Partition Designs in the UL Fire Resistance Directory and shall include the following construction features:

A. **Studs —** Wall framing may consist of either wood studs or steel channel studs. Wood studs to consist of nom 2 in. (51 mm) by 4 in. (102 mm) lumber spaced 16 in. (406 mm) OC. Steel studs to be min 2-1/2 in. (64 mm) wide and spaced max 24 in. (610 mm) OC. Additional studs installed to completely frame the opening.

B. **Gypsum Board* —** 5/8 in. (16 mm) thick, 4 ft (1219 mm) wide with square or tapered edges. The gypsum board type, thickness, number of layers, fastener type and sheet orientation shall be as specified in the individual Wall and Partition Design. Max area of opening is 352 sq in. (2271 sq cm) with max dimension of 22 in. (559 mm) wide.
The hourly F and FH Ratings of the fire-stop system are equal to the hourly fire rating of the wall assembly in which it is installed.

2. **Cable Tray* —** Max 18 in. (457 mm) wide by max 6 in. (152 mm) deep open-ladder or solid-back cable tray with channel-shaped side rails formed of 0.060 in. (1.65 mm) thick aluminum or 0.060 in (1.52 mm) thick steel and with 1-1/2 in. (38 mm) wide by 1 in. (25 mm) channel shape rungs spaced 9 in. (229 mm) OC or a D229 in. (0.74 mm) thick steel solid back, respectively. One cable tray to be installed in the opening. The max annular space between the cable tray and the periphery of the opening shall be min 1 in. (25 mm) to max 7 in. (178 mm). Cable tray to be rigidly supported on both sides of floor or wall assembly.

3. **Cables—** Aggregate cross-sectional area of cables in cable tray to be max 30 percent of the cross-sectional area of the cable tray. Any combination of the following types and sizes of copper conductor cables may be used:

A. 7/C No. 12 AWG with polyvinyl chloride (PVC) insulation and PVC jacket.

B. 100 pair - No. 24 AWG cable with PVC insulation and jacket.

C. 1/C, 750 kcmil (or smaller) with PVC insulation and jacket.

4. **Through-Penetrants—** One or more pipe or tube to be installed within the opening. The total number of through-penetrants is dependent on the size of the opening and types and sizes of the penetrants. Any combination of the penetrants described below may be used provided that the following parameters relative to the annular spaces and the spacings between the pipes are maintained. The space between the pipe or tube and the periphery of the opening shall be min 1-1/2 in. (38 mm) to max 9-1/4 in. (235 mm). Pipe or tube to be rigidly supported on both sides of floor or wall assembly. The following types and sizes of non-metallic or metallic pipes, or tubes may be used:

A. **Polyvinyl Chloride (PVC) Pipe —** Max 3 in. (76 mm) diam Schedule 40 solid-core PVC pipe (or smaller) for use in closed (process or supply) or vented (drain, waste or vent) piping system.

B. **Steel Pipe—** Nom 6 in. (152 mm) diam (or smaller) Schedule 40 (or heavier) steel pipe.

C. **Conduit —** Nom 4 in. (102 mm) diam (or smaller)steel electrical metallic tubing or 6 in. (152 mm) diam steel conduit.

D. **Copper Pipe —** Nom 4 in. (102 mm) diam (or smaller) Regular (or heavier) copper pipe.

E. **Copper Tube—** Nom 4 in. (102 mm) diam (or smaller) Type L (or heavier) copper tube.

4A. **Pipe Covering—** (Not Shown)— Nom 1-1/2 in. (38 mm) thick hollow cylindrical heavy density (min 3.5 pcf) (56 kg/m^3) glass fiber units jacketed on the outside with an all service jacket. Longitudinal joints sealed with metal fasteners or factory applied self-sealing lap tape. Transverse joints secured with metal fasteners or with butt tape supplied with the product.
See **Pipe and Equipment Covering and Materials** (BRGU) category in the Building Materials Directory for names of manufacturers. Any pipe covering material meeting the above specifications and bearing the UL Classification Marking with a Flame Spread Index of 25 or less and a Smoke Developed Index of 50 may be used.

5. **Cables—** Max 1-1/2 in. (38 mm) diam tight bundle of cables installed within the opening and rigidly supported on both surfaces of wall. The space between the cables and periphery of the opening shall range from 1-3/16 in. (30.2 mm) min to a max of 1-1/2 in. (38 mm). Any combination of the following types and sizes of cables may be used:

A. 7/C No. 12 AWG with polyvinyl chloride (PVC) insulation and jacket.

B. 25 pair - No. 24 AWG cable with PVC insulation and jacket.

C. Type R GU/SR coaxial cable with PVC outer jacket.

D. 24 fiber optic cable with PVCsub unit and outer jacket.

E. Max 1/C No. 500 kcmil (or smaller) copper conductor cable with PVC jacket.

6. **Firestop System —** The firestop system shall consist of the following:

A. **Fill, Void or Cavity Material* —** Sealant — Fill material to be forced into interstices of cables, between cables and cable trays, around each penetrant and where obvious voids are observed to max extent possible on both surfaces of the penetration.
HILTI CONSTRUCTION CHEMICALS, DIV OF HILTI INC — FS-One Sealant, FS-ONE MAX Intumescent Sealant, CP 618 Putty Stick, CP 6810 Firestop Foam or CP620 Fire Foam

C4	SYSTEM NO. W-L-8013
A883	N.T.S.

System No. W-L-8052

July 12, 2016

ANSI/UL1479 (ASTM E814)	CAN/ULC S115
F Rating — 1 and 2 Hr (See Item 1)	F Rating — 1 and 2 Hr (See Item 1)
T Rating — 0 Hr	FT Rating — 0 Hr
	FH Rating — 1, and 2 Hr (See Item 1)
	FTH Rating — 0 Hr.

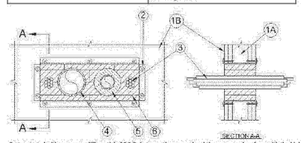

SECTION A-A

System tested with a pressure differential of 2.5 Pa between the exposed and the unexposed surfaces with the higher pressure on the exposed side.

1. **Wall Assembly—** The 1 or 2 hr fire-rated gypsum board/stud wall assembly shall be constructed of the materials and in the manner specified in the individual U300 or U400 or V400 Series Wall and Partition Designs in the UL Fire Resistance Directory and shall include the following construction features:

A. **Studs —** Wall framing may consist of either woodstuds or steel channel studs. Wood studs to consist of nom 2 by 4 in. (51 by 102 mm) lumber spaced 16 in. (406 mm) OC. Steel studs to be min 2-1/2 in. (64 mm) wide and spaced max 24 in. (610 mm) OC.

B. **Gypsum Board* —** 5/8 in. (16 mm) thick, 4 ft (1.2 m) wide with square or tapered edges. The gypsum board type, thickness, number of layers, fastener type and sheet orientation shall be as specified in the individual Wall and Partition Design. Max area of opening is 188 sq in. (0.12 m^2) with max dimensions of 14-1/2 in. (368 mm) for wood studs. Max area of opening is 325 sq in. (0.21 m^2) with max dimensions of 25 in. (635 mm) for steel studs.
The hourly F / FH Rating of the firestop system is equal to the hourly fire rating of the wall assembly in which it is installed.

2. **Sheet Metal Sleeve —** Max 16 in. (406 mm) by 6 in. (152 mm) by 24 gauge (or heavier) galvanized steel with min 1 in. (25 mm) flanges. Sleeve to be flush with both surfaces of wall and secured to both side of wall through the flanges with min 1/4 in. (6 mm) diam steel hollow wall anchors in conjunction with steel washers spaced a max 6 in. (152 mm) OC.

3. **Cables—** Max of two 3 in. (76 mm) (or smaller) diam tightly bundled cables installed within the opening and rigidly supported on both surfaces of wall. The space between the cables and periphery of the opening and between the cables and through penetrants installed at fill may be from 1 in. (25 mm) min to a max of 4-1/2 in. (114 mm). Cables to be rigidly supported on both sides of wall assembly. Any combination of the following types and sizes of cables may be used:

A. 7/C No. 12 AWG with polyvinyl chloride (PVC) insulation and jacket.

B. Max 100 pair No. 24 AWG cable with PVC insulation and jacket.

C. Type R GU/SR coaxial cable with PVC outer jacket.

D. 24 fiber optic cable with PVCsub unit and outer jacket.

E. Max 1/C No. 500 kcmil (or smaller) copper conductor cable with PVC jacket.

4. **Through-Penetrants—** Max two pipes, conduits or tubes to be installed within the opening. The total number of through-penetrants is dependent on the size of the opening and types and sizes of the penetrants. Any combination of the penetrants described below may be used provided that the following parameters relative to the annular spaces and the spacings between the penetrants are maintained. The space between the penetrants and the periphery of the opening shall be min 1-1/2 in. (38 mm) to max 4-1/2 in. (114 mm). The space between the penetrants shall be min 1-1/2 in. (38 mm) to max 4-1/2 in. (114 mm). Penetrants to be rigidly supported on both sides of wall assembly. The following types and sizes of non-metallic or metallic pipes, or tubes may be used:

A. **Polyvinyl Chloride (PVC) Pipe —** Max 3 in. (76 mm) diam Schedule 40 solid core PVC pipe (or smaller) for use in closed (process or supply) or vented (drain, waste or vent) piping system.

B. **Steel Pipe—** Nom 4 in. (102 mm) diam (or smaller) Schedule 40 (or heavier) steel pipe.

C. **Conduit —** Nom 4 in. (102 mm) diam (or smaller)steel electrical metallic tubing or rigid steel conduit.

D. **Copper Pipe —** Nom 4 in. (102 mm) diam (or smaller) Regular (or heavier) copper pipe.

E. **Copper Tube—** Nom 4 in. (102 mm) diam (or smaller) Type L (or heavier) copper tube.

5. **Pipe Covering —** (Optional)— Copper tubes and pipe and steel pipes may be provided with nom 1-1/2 in. (38 mm) thick (or thinner) hollow cylindrical heavy density glass fiber units jacketed on the outside with an all service jacket. Longitudinal joints sealed with metal fasteners or factory applied self-sealing lap tape. Transverse joints secured with metal fasteners or with butt tape supplied with the product.
See **Pipe and Equipment Covering and Materials** (BRGU) category in the Building Materials Directory for names of manufacturers. Any pipe covering material meeting the above specifications and bearing the UL Classification Marking with a Flame Spread Index of 25 or less and a Smoke Developed Index of 50 may be used.

6. **Firestop System —** The firestop system shall consist of the following:
A. **Fill, Void or Cavity Material* — Sealant —** Fill material to be forced into interstices of cables, between cables and around each penetrant and where obvious voids are observed to max extent possible on both surfaces of the penetration.
HILTI CONSTRUCTION CHEMICALS, DIV OF HILTI INC — FS-One Sealant or FS-ONE MAX Intumescent Sealant

A4	SYSTEM NO. W-L-8052
A883	N.T.S.

8/13/2021 BXUV.G536 - Fire-resistance Ratings - ANSI/UL 263 | UL Product iQ

UL Product iQ™

BXUV.G536 - Fire-resistance Ratings - ANSI/UL 263

Design/System/Construction/Assembly Usage Disclaimer

- Authorities Having Jurisdiction should be consulted in all cases as to the particular requirements covering the installation and use of UL Certified products, equipment, system, devices, and materials.
- Authorities Having Jurisdiction should be consulted before construction.
- Fire resistance assemblies and products are developed by the design submitter and have been investigated by UL for compliance with applicable requirements. The published information cannot always address every construction nuance encountered in the field.
- When field issues arise, it is recommended the first contact for assistance be the technical service staff provided by the product manufacturer noted for the design. Users of fire resistance assemblies are advised to consult the general Guide Information for each product category and each group of assemblies. The Guide Information includes specifics concerning alternate materials and alternate methods of construction.
- Only products which bear UL's Mark are considered Certified.

BXUV - Fire Resistance Ratings - ANSI/UL 263 Certified for United States

BXUV7 - Fire Resistance Ratings - CAN/ULC-S101 Certified for Canada

See General Information for Fire-resistance Ratings - ANSI/UL 263 Certified for United States
Design Criteria and Allowable Variances

See General Information for Fire Resistance Ratings - CAN/ULC-S101 Certified for Canada
Design Criteria and Allowable Variances

Design No. G536

November 12, 2019

Unrestrained Assembly Rating - 2 Hr

This design was evaluated using a load design method other than the Limit States Design Method (e.g., Working Stress Design Method). For jurisdictions employing the Limit States Design Method, such as Canada, a load restriction factor shall be used — See Guide BXUV or BXUV7.

*** Indicates such products shall bear the UL or cUL Certification Mark for jurisdictions employing the UL or cUL Certification (such as Canada), respectively.**

8/13/2021 BXUV.G536 - Fire-resistance Ratings - ANSI/UL 263 | UL Product iQ

1/4 in. deep by 21-3/4 in. long with 2-1/8 in. long web extensions at each end for screw-attachment to the bottom flange of the steel joists with a 3/4 in. long No. 10 x 16 self-drilling steel TEK screw. Solid bridging consisting of cut-to-length joist sections placed between the outermost joists and between the centermost joists with a max spacing of 8 ft OC. Solid bridging are screw-attached at joist web using a 1-1/2 by 1-1/2 by 7 in. long, No. 16 MSG, min 50 ksi steel support clip (EasyClip S-Series S547) with two 3/4 in. long No. 10 x 16 self-drilling steel TEK screws per leg on one side and on the other side with a 4 by 1-1/2 by 7 in. long No. 16 MSG, min 50 ksi steel support clip (EasyClip E-Series E547) with two 3/4 in. long No. 10 x 16 self-drilling steel TEK screws per leg.

4. **Batts and Blankets* —** 3-5/8 in. thick glass fiber batt insulation draped over the resilient channels (Item 5) or suspension system grid (Item 5A). Any glass fiber batt insulation bearing the UL Classification Marking for Surface Burning Characteristics having a flame spread index of 25 or less and a smoke developed index of 50 or less may be used. See **Batts and Blankets** (BKNW) category in the Building Materials Directory for names of manufacturers.

5. **Resilient Channels —** Formed of No. 25 MSG galv steel, 1/2 in. deep, spaced max 12 in. OC, perpendicular to joists. Channel splices located beneath joists and overlapped 4 in. Channels secured to each joist with one 1/2 in. long Type S-12 low-profile steel screw. Two channels, spaced 6 in. OC, oriented opposite each gypsum board end joint as shown on the illustration above. Additional channels shall extend min 6 in. beyond each side edge of board.

5A. **Steel Framing Members* —** (Optional, Not Shown) — When it is desired to drop the ceiling below the bottom plane of the structural steel members (Item 2), a suspension system may be used in lieu of the resilient channels. Main runners, cross tees, cross channels and wall angle as listed below:

a. **Main Runners —** Nom 10 or 12 ft long, 15/16 in. or 1-1/2 in. wide face, spaced 4 ft. OC. Main runners suspended by min 12 SWG galv steel hanger wires spaced 24 in. OC, a min of 4 in. below bottom flange of joist, twist-tied to #10 -3/4 in. long screws installed in the web, 1/2 in. fm m the bottom flange of the steel joist. Hanger wires to be located adjacent to main runner/cross tee intersections.

b. **Cross Tees —** Nom 4 ft long, 1-1/2 in. wide face, installed perpendicular to the main runners, spaced 16 in. OC. Additional cross tees or cross channels used at 8 in. from each side of butted gypsum panel end joints. The cross tees or cross channels may be riveted or screw attached to the wall angle or channel to facilitate the ceiling installation.

c. **Cross Channels —** Nom 4 ft or 12 ft long, installed perpendicular to main runners, spaced 16 in. OC.

d. **Wall Angle or Channel —** Painted or galv steel angle with 1 in. legs or channel with 1 in. legs, 1-9/16 in. deep attached to walls at perimeter of ceiling with fasteners 16 in. OC. To support steel framing member ends and for screw-attachment of the gypsum panel.
CGC INC — Type DGL or RX

USG INTERIORS LLC — Type DGL or RX.

5B. **Steel Framing Members* —** (Optional, Not Shown) — As an alternate to Item 5 — Furring channels and Steel Framing Members as described below:

a. **Furring channels —** Formed of No. 25 MSG galv steel, 2-3/8 in. wide by 7/8 in. deep, spaced 12 in. OC, perpendicular to joists. Channel secured to joists as described in Item b. Ends of adjoining channels overlapped 6 in. and tied together with double strand of No. 18 SWG galv steel wire near each end of overlap. Additional channels shall be positioned so that the distance from the end of the board to the center of the first channel is 3 in. and from the board end to the center of the next channel is 12 in.

b. **Steel Framing Members* —** Used to attach furring channels (Item a) to joists (Item 2). Clips spaced 48 in. OC and secured to the bottom chord of joists with min 1-5/8 in. long No. 8 self-drilling, self-tapping, bugle, flat or hex head screw through the center grommet. Furring channels are friction fitted into clips. Additional clips required to hold furring channel that supports the gypsum board butt joints.
PLITEQ INC — Type Genie Clip

8/13/2021 BXUV.G536 - Fire-resistance Ratings - ANSI/UL 263 | UL Product iQ

from UL" must appear adjacent to the extracted material. In addition, the reprinted material must include a copyright notice in the following format: "© 2021 UL LLC"

A6	UL G536 ELEVATOR SHAFT CAP
A883	N.T.S.

8/13/2021 BXUV.G536 - Fire-resistance Ratings - ANSI/UL 263 | UL Product iQ

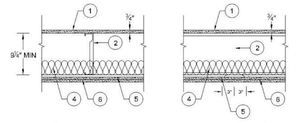

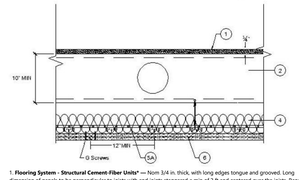

1. **Flooring System - Structural Cement-Filler Units* —** Nom 3/4 in. thick, with long edges tongue and grooved. Long dimension of panels to be perpendicular to joists with end joints staggered a min of 2 ft and centered over the joists. Panels secured to steel joists with 1-5/8 in. long No. 8 self-drilling, self-countersinking steel screws spaced a max of 12 in. OC in the field with a screw located 1 in. and 2 in. from each edge, and 8 in. OC on the perimeter with a screw located 2 in. from each edge, located 1/2 in. from the side edges of the panel.
UNITED STATES GYPSUM CO — Types STRUCTO-CRETE, USGSP

2. **Structural Steel Members* —** The proprietary joists are channel-shaped, min 9-1/4 in. deep. Joists are fabricated from min No. 16 MSG galv steel. Joists spaced max 24 in. OC. Joists attached to joist rim with three 3/4 in. long No. 10 x 16 self-drilling steel TEK screws through tab to the outside of the web. At joist rim splices bearing on supports, joists rims are connected using an overlapping section of a 12 in. long splice plate (a joist piece), with four 3/4 in. long No. 10 x 16 self-drilling steel TEK screws to each rim piece.
CLARKDIETRICH BUILDING SYSTEMS — Type TDI or TDW Floor Joists, TD24 Rim Joist

3. **Joist Bridging - (Not Shown) —** Installed at the center of the joist span immediately after joists are erected and before construction loads are applied. The bridging (2-1/2 TDSB18) consists of No. 18 MSG galv steel channels, 2-1/2 in. wide by 1-

8/13/2021 BXUV.G536 - Fire-resistance Ratings - ANSI/UL 263 | UL Product iQ

5C. **Alternate Steel Framing Members* —** (Optional, Not Shown) — As an alternate to Items 5 to 5B, furring channels and Steel Framing Members as described below.

a. **Furring channels —** Formed of No. 25 MSG galv steel. 2-9/16 in. or 2-23/32 in. wide by 7/8 in. deep, spaced 12 in. OC, perpendicular to joists. Channels secured to joists as described in Item b. Ends of adjoining channels overlapped 6 in. and tied together with double strand of No. 18 SWG galv steel wire near each end of overlap.

b. **Steel Framing Members* —** Used to attach furring channels (Item a) to the steel joists (Item 2). Clips spaced a max of 48 in. OC. RSIC-1 and RSIC-1 XTR clips secured to alternating joists with No. 8 x 2-1/2 in. coarse drywall screw through the center grommet. Furring channels are friction fitted into clips. RSIC-1 clips for use with 2-9/16 in. wide furring channels. RSIC-1 (2.75) clips for use with 2-23/32 in. wide furring channels. Adjoining channels are overlapped as described in Item a. As an alternate, ends of adjoining channels may be overlapped 6 in. and secured together with two self-tapping No. 6 framing screws, min. 7/16 in. long at the midpoint of the overlap, with one screw on each flange of the channel. Additional clips required to hold furring channel that supports the wallboard butt joints, as described in Item b.
PAC INTERNATIONAL L L C — Types RSIC-1 or RSIC-1 (2.75)

6. **Gypsum Board* —** Nom 5/8 in. thick, 48 in. wide gypsum panels. Base layer installed with long dimension perpendicular to resilient channels, furring channels or cross tees, secured with 1 in. long Type S bugle-head screws spaced 12 in. OC, with screws located 6 in. from end in each side of the gypsum panel, in both the field and the perimeter, and 1-1/2 in. from side edges of the panels. Face layer installed with long dimension perpendicular to resilient/furring channels or cross tees with joints offset 24 in. from base layer, secured with 1-5/8 in. long Type S bugle-head screws spaced 8 in.OC, with screws located 4 in. from and on each side of the gypsum panel midspan, in both the field and the perimeter, and 1-1/2 in. from side edges of the panel. Butt joints of face layer panels secured to base layer with 1-1/2 in. long Type G screws spaced 8 in. OC and 1-1/2 in. from side edges of the panels, with butt joints located between framing channels. Butt joints of face panels staggered a minimum of 12 in. from butt joints of base layer. When **Steel Framing Members** (Item 5B or 5C) are used, the butt joints in the gypsum board shall be supported by two furring channels. The two furring channels shall be spaced approximately 3-1/2 in. OC, and be attached to underside of the joist with one RSIC-1, RSIC-1 (2.75) or Genie clip at each end of the channel.
CGC INC — Types C, IP-X2, IPC-AR, ULIX

UNITED STATES GYPSUM CO — Types C, IP-X2, IPC-AR, ULIX

USG BORAL DRYWALL SFZ LLC — Type C

USG MEXICO S A DE C V — Types C, IP-X2, IPC-AR

7. **Finishing System - (Not Shown) —** Vinyl, dry or premixed joint compound, applied in two coats to joints and screw-heads. Nom 2 in. wide paper tape embedded in first layer of compound over all joints. As an alternate, nom 3/32 in. thick veneer plaster may be applied to the entire surface of gypsum board.

*** Indicates such products shall bear the UL or cUL Certification Mark for jurisdictions employing the UL or cUL Certification (such as Canada), respectively.**

Last Updated on 2019-11-12

The appearance of a company's name or product in this database does not in itself assure that products so identified have been manufactured under UL's Follow-Up Service. Only those products bearing the UL Mark should be considered to be Certified and covered under UL's Follow-Up Service. Always look for the Mark on the product.

UL permits the reproduction of the material contained in the Online Certification Directory subject to the following conditions: 1. The Guide Information, Assemblies, Constructions, Designs, Systems, and/or Certifications (files) must be presented in their entirety and in a non-misleading manner, without any manipulation of the data (or drawings). 2. The statement "Reprinted from the Online Certifications Directory with permission

KUO DIEDRICH CHI
730 PEACHTREE STREET, NE
STUDIO 325
ATLANTA, GEORGIA 30308
678.244.6270
www.KDCarchitects.com

ARCHITECT:

ARCH. REG: AR91344

CONSULTANT:

REVISIONS

DATE:	DESCRIPTION:
10/18/24	SCHEMATIC DESIGN
6/5/25	DESIGN DEVELOPMENT
10/23/25	50% CONSTRUCTION DOCS
11/14/25	PERMIT SET

PROJECT:
SERENITY SEASIDE RESORT

BUILDING #1

THE INN

186 SOUTH BAY SHORE DRIVE, EASTPOINT, FL 32328

Serenity Seaside Operations, LLC
174 Watercolor Way, PMB 410
Santa Rosa Beach, Florida 32459

JOB NUMBER: 23019.1

DATE: --/--/----

TITLE:
UL PENETRATIONS

SHEET:
A883

K:\Projects\23\23019\GWSA\Serenity_Bldg-1_Inn\Sheets\23019.1-A883.dwg Plotted: Nov 13, 2025 - 6:34pm by ColebLawrence

Design No. U415

September 27, 2019

Nonbearing Wall Ratings — 1, 2, 3 or 4 Hr

*** Indicates such products shall bear the UL or cUL Certification Mark for jurisdictions employing the UL or cUL Certification (such as Canada), respectively.**

System A – 1 Hr.



Horizontal Section

System B – 2 Hr.



Horizontal Section

System C – 2 Hr.



Horizontal Section

System D – 2 Hr.

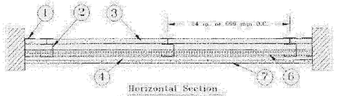

Horizontal Section

System E – 2 Hr.



Horizontal Section

System F – 2 Hr.

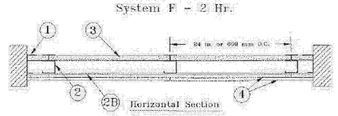

2B Horizontal Section

System G – 3 Hr.

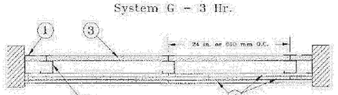

Horizontal Section

System H – 3 Hr.

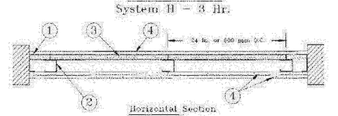

Horizontal Section

System I – 4 Hr.

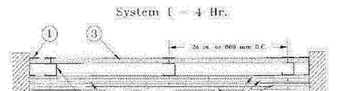

2C Horizontal Section

1. **Floor, Side and Ceiling Runners —** "J" - shaped runner, min 2-1/2 in. deep (min 4 in. deep when System C is used), with unequal legs of 1 in. and 2-in., fabricated from min 24 MSG (min 20 MSG when Item 4A, 4B, 4C, 4D or 7 are used) galv steel. Runners positioned with short leg toward finished side of wall. Runners attached to structural supports with steel fasteners located not greater than 2 in. from ends and not greater than 24 in. OC. "E" - shaped studs (Item 2A) may be used as side runners in place of "J" - shaped runners.

2. **Steel Studs —** "C-H" - shaped studs; min 2-1/2 in. deep (min 4 in. deep when System C is used); fabricated from min 25 MSG (min 20 MSG when Items 2D, 4A, 4B, 4C, 4D or 7 is used) galv steel. Cut to lengths 3/8 to 1/2 in. less than floor-to-ceiling height and spaced 24 in. or 600 mm OC (max 16 in. OC when Items 4A, 4B, 4C, or 4D are used).

2A. **Steel Studs —** (Not Shown) — "E" - shaped studs installed back to back in place of "C-H" - shaped studs (Item 2) "E" - shaped studs secured together with steel screws spaced a maximum 12 in. OC. Fabricated from min 25 MSG (min 20 MSG when Item 2D, 4A, 4B or 7 is used) galv steel, min 2-1/2 in. deep (min 4 in. deep when System C is used), with one leg 1 in. long and two legs 3/4 in. long. Shorter legs 1 in. apart to engage gypsum liner panels. Cut to lengths 3/8 to 1/2 in. less than floor to ceiling heights.

2B. **Furring Channels —** (Optional, Not Shown) — For use with single or double layer systems. Resilient furring channels fabricated from min 25MSG corrosion protected steel, installed horizontally, and spaced vertically a max 24 in. OC. Flange portion of channel attache for each intersecting "C-H" or "E" stud on side of stud opposite the 1 in. liner panels with 1/2 in. long Type S or S-12 pan-head steel screws. When furring channels are used, wallboard to be installed vertically only . Not to be used with Type FRX-G gypsum board, lead backed gypsum boards (Items 4A-4D), or cementitious backer units (Item 7).

2C. **Furring Channels —** For use with System I - "Hat" - shaped, 25 MSG galv steel furring channels attached directly over the inner layers of wallboard to each stud with 2 in. long Type S pan head steel screws. Screws alternate from top flange to bottom flange at each stud intersection. Furring channels spaced vertically max 24 in. OC.

2D. **Steel Framing Members* —** (Optional, Not Shown) — For use with single or double layer systems. Furring channels and Steel Framing Members as described below. Not to be used with Type FRX-G gypsum board, lead backed gypsum boards (Items 4A-4D), or cementitious backer units (Item 7).

a. **Furring Channels —** Formed of No. 25 MSG galv steel. 2-9/16 in. or 2-23/32 in. wide by 7/8 in. deep, spaced max. 24 in. OC perpendicular to studs. Channels secured to studs as described in Item b. Gypsum board installed vertically only and attached to furring channels as described in Item 4.

b. **Steel Framing Members* —** Used to attach furring channels (Item 2Da) to studs (Item 2 or 2A). Clips spaced max, 24 in. OC., and secured to studs with No. 8 x 1-1/2 in. minimum self-drilling, S-12 steel screw through the center grommet. Furring channels are friction fitted into clips. RSIC-1 clip for use with 2-9/16 in. wide furring channels. RSIC-1 (2.75) clip for use with 2-23/32 in. wide furring channels.
PAC INTERNATIONAL L L C — Types RSIC-1, RSIC-1 (2.75)

2E. **Steel Framing Members* —** (Optional, Not Shown) — Furring channels and Steel Framing Members as described below. . Not to beused with Type FRX-G gypsum board, lead backed gypsum boards (Items 4A-4D), or cementitious backer units (Item 7).

a. **Furring Channels —** Formed of No. 25 MSG galv steel. Spaced 24 in. OC perpendicular to studs. Channels secured to studs as described in Item b. Ends of adjoining channels overlapped 6 in. and tied together with double strand of No. 18 AWG galvanized steel wire. Gypsum board attached to furring channels as described in Item 4.

b. **Steel Framing Members* —** Used to attach furring channels (Item 2Ea) to studs. Clips spaced 24 in. OC., and secured to studs with No. 8 x 2-1/2 in. coarse drywall screw through the center hole. Furring channels are friction fitted into clips.
STUDCO BUILDING SYSTEMS — RESILMOUNT Sound Isolation Clips - Type A2378

2F. **Steel Framing Members* —** (Optional, Not Shown) — For use with single or double layer systems. Furring channels and Steel Framing Members as described below. Not to be used with Type FRX-G gypsum board, lead backed gypsum boards (Items 4A-4D), or cementitious backer units (Item 7).

a. **Furring Channels —** Formed of No. 25 MSG galv steel. 2-3/8 in. wide by 7/8 in. deep, spaced max. 24 in. OC perpendicular to studs. Channels secured to studs as described in Item b. Gypsum board installed vertically only and attached to furring channels as described in Item 3.

b. **Steel Framing Members* —** Used to attach furring channels (Item 2Da) to studs (Item 2 or 2A.). Clips spaced max. 24 in. OC GENIECLIPS secured to studs with No. 8 x 1-1/2 in. minimum self-drilling, S-12 steel screw through the center grommet. Furring channels are friction fitted into clips.
PLITEQ INC — Type GENIECLIP

2G. **Steel Framing Members* —** (Optional, Not Shown) — Furring channels and Steel Framing Members as described below. Not to be used with Type FRX-G gypsum board, lead backed gypsum boards (Items 4A-4D), or cementitious backer units (Item 7).

a. **Furring Channels —** Formed of No. 25 MSG galv steel, spaced 24 in. OC, and perpendicular to studs. Channels secured to studs as described in Item b. Ends of adjoining channels overlapped 6 in. and secured in place with two No. 8. 15 x 1/2 in. Phillips Modified Truss screws spaced 2-1/2 in. from the center of the overlap. Gypsum board attached to resilient channels as described in Item 4.

b. **Steel Framing Members* —** Used to attach resilient channels (Item 2Ha) to studs. Clips spaced 48 in. OC., and secured to studs with No. 8 x 2-1/2 in. coarse drywall screw through the center hole. Resilient channels are secured to clips with one No. 10 x 1/2 in. pan-head self-drilling screw.
KEENE BUILDING PRODUCTS CO INC — Type RC+ Assurance Clip

2I. **Steel Framing Members* —** (Optional, Not Shown) — For use with single or double layer systems. Furring channels and Steel Framing Members as described below. Not to be used with Type FRX-G gypsum board, lead backed gypsum boards (Items 4A-4D), or cementitious backer units (Item 7).

a. **Furring Channels —** Formed of No. 25 MSG galv steel. 2-23/32 in. wide by 7/8 in. or 1-1/2 in. deep, spaced max. 24 in. OC perpendicular to studs. Channels secured to studs as described in Item b. Gypsum board installed vertically only and attached to furring channels as described in Item 4.

b. **Steel Framing Members* —** Used to attach furring channels (Item 2Ia) to studs (Item 2 or 2A). Clips spaced max. 24 in. OC., and secured to studs with No. 8 x 1-1/2 in. minimum self-drilling, S-12 steel screw through the center grommet. Furring channels are friction fitted into clips.
CLARKDIETRICH BUILDING SYSTEMS — Type ClarkDietrich Sound Clip

3. **Gypsum Board* —** Gypsum liner panels, nom 1 in. thick, 24 in. or 600 mm (for metric spacing) wide. Panels cut 1 in. less in length than floor to ceiling height. Vertical edges inserted in "H" portion of "C-H" studs or the gap between the two 3/4 in. legs of the "E" studs. Free edge of end panels attached to long leg of vertical "J" - runners with 1-5/8 in. long Type S steel screws spaced not greater than 12 in. OC. When wall height exceeds liner panel length, liner panel may be butted to extend to the full height of the wall. Horizontal joints need not be backed by steel framing. In System I, butt joints in liner panels are staggered min 36 in. Butt joints backed with 6 in. by 22 in. strips of 3/4 in. thick gypsum wallboard (Item 4). Wallboard strips centered over butt joints and secured to liner panels with six 1-1/2 in. long Type G steel screws, three screws along the 22 in. dimension at the top and bottom of the strips.
CGC INC — Type SLX

UNITED STATES GYPSUM CO — Type SLX

USG BORAL DRYWALL SYZ LLC — Type SLX

USG MEXICO S A DE C V — Type SLX

4. **Gypsum Board* —**

System A — 1 Hr

Gypsum panels, with beveled, square or tapered edges, nom 5/8 in. thick, 48 in or 1200 mm wide, applied vertically or horizontally,attache to studs with 1 in. long Type S steel screws spaced 12 in. when installed vertically or 8 in OC when installed horizontally. Horizontal joints need not be backed by steel framing.

CGC INC — Types AR, C, IP-AR, IP-X1, IP-X2, IPC-AR, SCX, SHX, ULX, USGX, WRC, WRX

UNITED STATES GYPSUM CO — Types AR, C, FRX-G, IP-AR, IP-X1, IP-X2, IPC-AR, SCX, SGX, SHX, ULIX, ULX, WRC, WRX, USGX. When USGX is used insulation, item 6, **Batts and Blankets*** is required and minimum stud depth is 4 in.

USG BORAL DRYWALL SYZ LLC — Types C, SCX, SGX, USGX

USG MEXICO S A DE C V — Types AR, C, IP-AR, IP-X1, IP-X2, IPC-AR, SCX, SHX, ULIX, USGX, WRC, WRX

System B — 2 Hr

Gypsum panels, with beveled, square or tapered edges, nom 1/2 in. or 5/8 in thick, 48 in or 1200 mm wide, applied vertically or horizontally in two layers. Inner or base layer attached to studs with 1 in. long Type S steel screws spaced 24 in. OC when installed vertically or 16 in. OC when installed horizontally. Outer or face layer attached to studs with 1-5/8 in. long Type S steel screws spaced 12 in. OC when installed vertically and staggered 12 in. from base layer screws or 8 in. OC when installed horizontally and staggered 8 in. from base layer screws. Horizontal joints between inner and outer layers staggered a min of 12 in. Horizontal joints need not be backed by steel framing. Vertical joints centered over studs and staggered 24 in.

CGC INC — 1/2 in. Type C, IP-X2, IPC-AR or WRC; 5/8 in. Types AR, C, IP-AR, IP-X1, IP-X2, IPC-AR, SCX, SHX, ULX, USGX, WRC, WRX

UNITED STATES GYPSUM CO — 1/2 in. Types C, IP-X2, IPC-AR or WRC; 5/8 in. Types AR, C, FRX-G, IP-AR, IP-X1, IP-X2, IPC-AR, SCX, SGX, SHX, ULIX, ULX, USGX, WRC, WRX.

USG BORAL DRYWALL SYZ LLC — 1/2 in. Type C; 5/8 in. Types C, SCX, SGX, USGX

USG MEXICO S A DE C V — 1/2 in. Types C, IP-X2, IPC-AR or WRC; 5/8 in. Types AR, C, IP-AR, IP-X1, IP-X2, IPC-AR, SCX, SHX, ULX, USGX, WRC, WRX.

System C — 2 Hr

Gypsum panels, with beveled, square or tapered edges, nom 3/4 in. thick, 48 in or 1200 mm wide, applied vertically or horizontally, secured with 1-1/4 in. long Type S steel screws spaced 8 in. OC along vertical edges and 12 in. OC in the field when installed vertically or 8 in. OC along the vertical edges and in the field when installed horizontally. Horizontal joints need not be backed by steel framing. Screws along side joints offset 4 in. Requires min 4 in. deep framing per Items 1, 2 and 3. Requires min 3 in. thick mineral wool batts per Item 6.

CGC INC — Types IP-X3 or ULTRACODE

UNITED STATES GYPSUM CO — Types IP-X3 or ULTRACODE

USG BORAL DRYWALL SYZ LLC — Type ULTRACODE

USG MEXICO S A DE C V — Types IP-X3 or ULTRACODE

System D — 2 Hr

Gypsum panels, with beveled, square or tapered edges, nom 5/8 in. thick, 48 in or 1200 mm wide, applied vertically or horizontally, attached directly to studs with 1 in. long Type S steel screws spaced 24 in. when installed vertically or 16 in. OC when installed horizontally. Horizontal joints need not be backed by steel framing.Requires face layer of 1/2 or 5/8 in thick cementitious backer units per Item 7 and min 1-1/2 in. thick mineral wool batts per Item 6. .

CGC INC — Types AR, C, IP-AR, IP-X1, IP-X2, IPC-AR, SCX, SHX, ULX, USGX, WRC, WRX

UNITED STATES GYPSUM CO — Types AR, C, FRX-G, IP-AR, IP-X1, IP-X2, IPC-AR, SCX, SGX, SHX, ULIX, ULX, USGX, WRC, WRX

USG BORAL DRYWALL SYZ LLC — Types C, SCX, SGX, USGX

USG MEXICO S A DE C V — Types AR, C, IP-AR, IP-X1, IP-X2, IPC-AR, SCX, SHX, ULIX, USGX, WRC, WRX

System E — 2 Hr

Gypsum panels, with beveled, square or tapered edges, nom. 1/2 in. or 5/8 in thick, 48 in or 1200 mm wide, applied vertically or horizontally, attached to studs with 1 in. long Type S steel screws spaced 12 in. OC when installed vertically or 8 in. when installed horizontally. Horizontal joints need not be backed by steel framing.

CGC INC — 1/2 in. Types C, IP-X2, IPC-AR; 5/8 in. Types AR, C, IP-AR, IP-X1, IP-X2, IPC-AR, SCX, SHX, ULX, USGX, WRC, WRX

UNITED STATES GYPSUM CO — 1/2 in. Types C, IP-X2, IPC-AR; 5/8 in. Types AR, C, FRX-G, IP-AR,IP-X1, IP-X2, IPC-AR, SCX, SGX, SHX, ULIX, ULX, USGX, WRC, WRX.

USG BORAL DRYWALL SYZ LLC — 1/2 in. Type C; 5/8 in. Types C, SCX, SGX, USGX

USG MEXICO S A DE C V — 1/2 in. Types C, IP-X2, IPC-AR; 5/8 in. Types AR, C, IP-AR, IP-X1, IP-X2, IPC-AR, SCX, SHX, ULX, USGX, WRC, WRX

System F — 2 Hr

Gypsum panels, with beveled, square or tapered edges, nom 1/2 in. or 5/8 in. thick, 48 in. or 1200 mm wide, applied vertically in two layers. Inner or base layer attached to resilient furring channels (Item 2B) with 1 in. long Type S steel screws spaced 24 in. Outer or face layer attached to resilient furring channels Item. 2B with 1-5/8 in. long Type S steel screws spaced 12 in. OC and staggered 12 in. from base layer screws. Joints between inner and outer layers staggered 24 in.

CGC INC — 1/2 in. Type C, IP-X2, IPC-AR or WRC; 5/8 in. Types AR, C, FRX-G, IP-AR, IP-X1, IP-X2, IRC-AR, SCX, SHX, ULX, USGX, WRC, WRX

UNITED STATES GYPSUM CO — 1/2 in. Type C, IP-X2, IPC-AR or WRC; 5/8 in. Types AR, C, FRX-G, IP-AR, IP-X1, IP-X2, IPC-AR, SCX, SGX, SHX, ULIX, ULX, USGX, WRC, WRX

USG BORAL DRYWALL SYZ LLC — 1/2 in. Type C; 5/8 in. Types C, SCX

USG MEXICO S A DE C V — 1/2 in. Types C, IP-X2, IPC-AR or WRC; 5/8 in. Types AR, C, IP-AR, IP-X1, IP-X2, IPC-AR, SCX, SHX, ULX, USGX, WRC, WRX

System G — 3 Hr

Gypsum panels, with beveled, square or tapered edges, nom 5/8 in. thick, 48 in or 1200 mm wide, applied vertically or horizontally in three layers. Inner or base layer attached to studs with 1 in. long Type S steel screws spaced 24 in. OC when installed vertically or 16 in OC when installed horizontally. Middle layer attached to studs with 1-5/8 in. long Type S steel screws spaced 24 in. when installed vertically or 16 in. OC when installed horizontally. Outer or face layer attached to studs with 2-1/4 in. long Type S steel screws spaced 16 in. when installed vertically or 12 in. OC when installed horizontally. Screws offset 6 in. from layer below. Horizontal joints on adjacent layers staggered a min of 12 in. . Horizontal joints need not be backed by steel framing. Vertical joints centered over studs and staggered 24 in. on adjacent layers.

CGC INC — Types C, IP-X2, IPC-AR, WRC

UNITED STATES GYPSUM CO — Types C, IP-X2, IPC-AR, WRC

USG BORAL DRYWALL SYZ LLC — Type C

USG MEXICO S A DE C V — Types C, IP-X2, IPC-AR, WRC

System H — 3 Hr

Gypsum panels, with beveled, square or tapered edges, nom 5/8 in. thick, 48 in. or 1200 mm wide, applied vertically or horizontally two layers over the flange of the "C" section of the studs, one layer over the flange of the "H" section of the studs. Inner or base layer attached to studs with 1 in. long Type S steel screws spaced 24 in. OC when installed vertically or 16 in. OC when installed horizontally. Face layer attached to studs with 1-5/8 in. long Type S steel screws spaced 16 in. when installed vertically or 12 in. OC when installed horizontally. Screws offset 6 in. from layer below. Horizontal joints on adjacent layers staggered a min of 12 in. Horizontal joints need not be backed by steel framing. Vertical joints centered over studs and staggered 24 in. on adjacent layers.

CGC INC — Types C, IP-X2, IPC-AR, WRC

UNITED STATES GYPSUM CO — Types C, IP-X2, IPC-AR, WRC

USG BORAL DRYWALL SYZ LLC — Type C

USG MEXICO S A DE C V — Types C, IP-X2, IPC-AR, WRC

System I — 4 Hr

Gypsum panels, with beveled, square or tapered edges, nom 3/4 in. thick, 4 ft wide (or 1200 mm for metric spacing) wallboard with square or tapered edge. Total of four layers to be used. First and second (inner) layers applied vertically or horizontally over the steel studs. Horizontal joints need not be backed by steel framing. When applied vertically, joints centered over studs and staggered min 24 in., otherwise all joints staggered min 12 in. First layer secured to studs with 1-1/4 in. long Type S self-drilling, self-tapping bugle-head steel screws spaced 24 in. OC. Second layer secured to studs with 2-1/4 in. long Type S self-drilling, self-tapping bugle-head steel screws spaced 12 in. OC. Third layer applied vertically over the furring channels (Item 2C) with a 1-1/4 in. long Type S self-drilling, self-tapping bugle-head steel screws spaced 12 in. OC. Fourth layer applied vertically or horizontally with 2-1/4 in. long Type S self-drilling, self-tapping bugle-head steel screws spaced 12 in. OC. When applied vertically, joints to be staggered min 24 in. from third layer, otherwise all joints staggered min 12 in.

CGC INC — Types IP-X3 or ULTRACODE

UNITED STATES GYPSUM CO — Types IP-X3 or ULTRACODE

USG BORAL DRYWALL SYZ LLC — Type ULTRACODE

USG MEXICO S A DE C V — Types IP-X3 or ULTRACODE

4A. **Gypsum Board* —** (As an alternate to Item 4 Systems A, B, C, D, E, G, H, and I when used as the base layer, For direct attachment only) — Nom 5/8 in. or 3/4 in. thick lead backed gypsum panels with beveled, square or tapered edges applied vertically. Vertical joints centered over 20 MSG steel studs and staggered min 1 stud cavity on opposite sides of studs. See Items 1, 2, 2A, 2B and 2D. Wallboard secured to studs with 1-1/4 in. long Type S-12 steel screws spaced 8 in. OC at perimeter and 12 in. OC in the field. For Joint Compound see Item 5. To be used with Lead Batten Strips (see Item 9) or Lead Discs or Tabs (see Item 10).
RAY-BAR ENGINEERING CORP — Type RB-LBG

4B. **Gypsum Board* —** (As an alternate to Item 4 Systems A, B, C, D, E, G, H, and I when used as the base layer, For direct attachment only) — Nominal 5/8 in. thick lead backed gypsum panels with beveled, square or tapered edges, applied vertically. Vertical joints centered over studs and staggered min 1 stud cavity on opposite sides of studs. Wallboard secured to studs with 1-1/4 in. long Type S-12 (or #6 by 1-1/4 in. long bugle head fine driller) steel screws spaced 8 in. OC at perimeter and 12 in. OC in the field.
NEW ENGLAND LEAD BURNING CO INC, DBA NELCO — Type Nelco

4C. **Gypsum Board* —** (As an alternate to Item 4 Systems A, B, C, D, E, G, H, and I when used as the base layer, For direct attachment only) — Nom 5/8 or 3/4 in. thick lead backed gypsum panels with beveled, square or tapered edges, applied vertically. Vertical joints centered over 20 MSG steel studs and staggered min 1 stud cavity on opposite sides of studs. See Items 1, 2, 2A, 2B and 2D. Wallboard secured to studs with 1-1/4 in. long Type S-12 steel screws spaced 8 in. OC at perimeter and 12 in. OC in the field. For Joint Compound see Item 5. To be used with Lead Batten Strips (see Item 9A) or Lead Discs (see Item 10A). Lead batten strips required behind vertical joints of lead backed gypsum wallboard and optional at remaining stud locations. Lead batten strips, min 2 in. wide, max 10 ft long with a max thickness of 0.140 in. placed on the face of studs and attached to the stud with two 1 in. long Type S-8 pan head steel screws, one at the top of the strip and one at the bottom of the strip.
MAYCO INDUSTRIES INC — Type X-Ray Shielded Gypsum

4D. **Gypsum Board* —** (As an alternate to Item 4 Systems A, B, C, D, E, G, H, and I when used as the base layer, For direct attachment only) — Nom 5/8 in. thick lead backed gypsum panels with beveled, square or tapered edges, applied vertically. Vertical joints centered over studs and staggered min 1 stud cavity on opposite sides of studs. Wallboard secured to studs with 1-1/4 in. long Type S-12 steel screws spaced 8 in. OC at perimeter and 12 in. OC in the field. Lead batten strips required behind vertical joints of lead backed gypsum wallboard and optional at remaining stud locations. Lead batten strips, min 2 in. wide, max 8 lb/sf with a max thickness of 0.14 in. placed on the face of studs and attached to the stud with construction adhesive and two 1 in. long Type S-12 pan head steel screws, one at the top of the strip and one at the bottom of the strip. Lead discs, nominal 3/8 in. diam by max 0.085 in. thick. Compression fitted or adhered over the screw heads. Lead batten strips and discs to have a purity of 99.9% meeting the Federal specification QQ-L-201f, Grade "C".
RADIATION PROTECTION PRODUCTS INC — Type RPP- Lead Lined Drywall

5. **Joint Tape and Compound —** (Not Shown)

Systems A, B, C, E, F, G, H, I

Joints on outer layers of gypsum boards (Item 4 and 4A) covered with paper tape and joint compound. Paper tape and joint compound may be omitted when gypsum boards are supplied with square edges. Exposed screw heads covered with joint compound.

6. **Batts and Blankets* —**

Systems A, B, E, F, G, H, I

(Optional) — Mineral wool or glass fiber batts partially or completely filling stud cavity. Any mineral wool or glass fiber batt mineral bearing the UL Classification Marking as to Fire Resistance.

System A With Type ULIX Gypsum Boards

Placed in stud cavities, any min. 3-1/2 in. thick glass fiber insulation bearing the UL Classification Marking as to Surface Burning Characteristics and/or Fire Resistance. See **Batts and Blankets (BKNV or BZJZ) Categories** for names of Classified companies.

Systems C & D

Min 3 in. (System C) and min 1-1/2 in. (System D) thick mineral wool batts, friction fitted between the studs and floor and ceiling runners.

ROCKWOOL — Type AFB, min. density 1.8 pcf / 28.8 kg/m^3

THERMAFIBER INC — Type SAFB, SAFB FF

7. **Cementitious Backer Units* —** (System D) — Nom 1/2 or 5/8 in. thick panels, square edge, attached to studs over gypsum wallboard with 1-5/8 in. long, Type S-12, corrosion resistant steel screws spaced 8 in. OC and staggered 8 in. from gypsum wall board screws. Joints covered with glass fiber mesh tape. Vertical joints staggered one stud cavity from gypsum wallboard joints. Horizontal joints staggered a min of 12 in. from the gypsum wallboard joints.
UNITED STATES GYPSUM CO — Type DCB

8. **Laminating Adhesive* —** (Optional, Not Shown) — Used to bond outer layer of Cementitious Backer Units (Item 7) to inner layers of Gypsum Board (Item 4) in System D. ANSI A136.1 Type 1 organic adhesive applied with 1/4 in square notched trowel. See Adhesives (BWWR) in the Fire Resistance Directory or Adhesives (BJLZ) in the Building Materials Directory for names of Classified companies.

9. **Lead Batten Strips —** (Not Shown, For Use With Item 4A) — Lead batten strips, min. 1-1/2 in. wide, max 10 ft long with a max thickness of 0.125 in. Strips placed on the interior face of studs and attached from the exterior face of the stud with two 1 in. long Type S-12 pan head steel screws, one at the top of the strip and one at the bottom of the strip. Lead batten strips to have a purity of 99.9% meeting the Federal specification QQ-L-201f, Grade "C". Lead batten strips required behind vertical joints of lead backed gypsum wallboard (Item 4A) and optional at remaining stud locations. Required behind vertical joints.

9A. **Lead Batten Strips —** (Not Shown, for use with Item 4C) — Lead batten strips, 2 in. wide, max 10 ft long with a max thickness of 0.140 in. Strips placed on the face of studs and attached to the stud with two min. 1 in. long min. Type S-8 pan head steel screws, one at the top of the strip and one at the bottom of the strip or with one min. 1 in. long min. Type S-8 pan head steel screw at the top of the strip. Lead batten strips to have a purity of 99.9% meeting the Federal specification QQ-L-201f, Grades "B, C or D". . Lead batten strips required behind vertical joints of lead backed gypsum wallboard (Item 4) and optional at remaining stud locations.

10. **Lead Discs or Tabs —** (Not Shown, For Use With Item 4A) — Used in lieu of or in addition to the lead batten strips (Item 9 or optional at other locations - Max 3/4 in. diam by max 0.125 in. thick lead discs compression fitted or adhered over steel screw heads or max 1/2 in. by 1-1/4 in. by max 0.125 in. thick lead tabs placed on gypsum boards (Item 4A) underneath screw locations prior to the installation of the screws. Lead discs or tabs to have a purity of 99.9% meeting the Federal specification QQ-L-201f, Grade "C".

10A. **Lead Discs —** (Not Shown, for use with Item 4C) — Max 5/16 in. diam by max 0.140 in. thick lead discs compression fitted or adhered over steel screw heads. Lead discs to have a purity of 99.5% meeting the Federal Specification QQ-L-201f, Grades "B, C or D".

11. **Lead Batten Strips —** (Not Shown, For Use With Item 4B) — Lead batten strips, 2 in. wide, max 10 ft long with a max thickness of 0.142 in. Strips placed on the face of studs and attached to the stud with two min. 1 in. long min. Type S-8 pan head steel screws, one at the top of the strip and one at the bottom of the strip or with one min. 1 in. long min. Type S-8 pan head steel screw at the top of the strip. Lead batten strips to have a purity of 99.9% meeting the Federal specification QQ-L-201f, Grade "C". Lead batten strips required behind vertical joints of lead backed gypsum wallboard (Item 4B) and optional at remaining stud locations.

12. **Lead Tabs —** (Not Shown, For Use With Item 4B) — 2 in. wide, 5 in. long with a max thickness of 0.142 in. Tabs friction-fit around front face of stud, the stud folded back flange, and the back face of the stud. Tabs required at each location where a screw (that secures the gypsum boards, Item 4B) will penetrate the steel stud. Lead tabs to have a purity of 99.9% meeting the Federal specification QQ-L-201f, Grade "C". Lead tabs may be held in place with standard adhesive tape if necessary.

A4	DESIGN NO. U415
A884	N.T.S.

KUO DIEDRICH CHI

730 PEACHTREE STREET, NE
STUDIO 325
ATLANTA, GEORGIA 30308
678.244.6270

www.KDCarchitects.com

ARCHITECT:

ARCH. REG: AR91344

CONSULTANT:

REVISIONS

DATE:	DESCRIPTION:
10/18/24	SCHEMATIC DESIGN
6/5/25	DESIGN DEVELOPMENT
10/23/25	50% CONSTRUCTION DOCS
11/14/25	PERMIT SET

PROJECT:

SERENITY SEASIDE RESORT

BUILDING #1

THE INN

186 SOUTH BAY SHORE DRIVE, EASTPOINT, FL 32328

Serenity Seaside Operations, LLC
174 Watercolor Way, PMB 410
Santa Rosa Beach, Florida 32459

JOB NUMBER: 23019.1

DATE: --/--/----

TITLE: UL ASSEMBLIES

SHEET: A884

K:\Projects\23\23019\GWDA\Serenity_Bldg-1_Inn\Sheets\23019.1-A884.dwg Plotted: Nov 13, 2025 – 6:34pm by ColebLawrence

Design No. U423

August 8, 2005

Bearing Wall Ratings — 3/4 hr, 1 h-1/2 or 2 hr (See Items 5 & 7)
This design was evaluated using a load design method other than the Limit States Design Method (e.g., Working Stress Design Method). For jurisdictions employing the Limit States Design Method, such as Canada, a load restriction factor shall be used — See Guide EXUV or EXUV7

*** Indicates such products shall bear the UL or cUL Certification Mark for jurisdictions employing the UL or cUL Certification (such as Canada), respectively.**

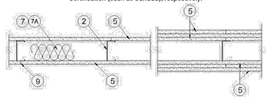

1. **Floor and Ceiling Runners —** (Not Shown) — Channel shaped, fabricated from min 0.0329 in., bare metal thickness (No. 20 MSG) corrosion-protected steel, that provide a sound structural connection between steel studs and adjacent assemblies such as floors, ceilings and/or other walls. Attached to floor and ceiling assemblies with steel fasteners spaced not greater than 24 in. OC.

1A. **Floor and Ceiling Runners —** (Not Shown, As an alternate to Item 1, For Use With Item 5A and 5C) — Channel shaped runners min 3-1/2 in. deep, with 1-1/4 in. flanges fabricated from min No. 20 MSG corrosion-protected steel. Attached to floor and ceiling assemblies with steel fasteners spaced not greater than 24 in. OC.

2. **Steel Studs —** Min 0.0329 in., bare metal thickness (No. 20 MSG) corrosion-protected steel studs, min 3-1/2 in. wide, cold formed, designed in accordance with the current edition of the Specification for the Design of Cold-Formed Steel Structural Members by the American Iron and Steel Institute (AISI). All design details enhancing the structural integrity of the wall assembly, including the axial design load of the studs, shall be as specified by the steel designer and/or producer, and shall meet the requirements of all applicable local code agencies. The max stud spacing shall not exceed 24 in. OC. Studs attached to floor and ceiling runners with 1/2 in. long Type S-12 steel screws on both sides of the studs or by welded or bolted connections designed in accordance with the AISI specifications.

2A. **Steel Studs —** (As an alternate to Item 2, For use with Item 5A, 5C, 5D, and 5E) — Channel shaped, fabricated from min 20 MSG corrosion-protected or galv steel, 3-1/2 in. min width, min 1-1/2 in. flanges and 1/4 in. return, spaced a max of 16 in. OC. Studs friction-fit into floor and ceiling runners.

2B. **Steel Studs —** (As an alternate to Item 2 and 2A, For Use with Item 5B) — Min 0.0329 in., (No. 20 MSG) corrosion-protected cold formed steel studs, min 3-1/2 in. deep by 1-5/8 in. wide with 1/2 in. returns. Braced at mid-height and designed in accordance with the current edition of the Specification for the Design of Cold-Formed Steel Structural Members by the American Iron and Steel Institute (AISI). All design details enhancing the structural integrity of the wall assembly, including the axial design load of the studs, shall be as specified by the steel designer and/or producer, and shall meet the requirements of all applicable local code agencies. The max stud spacing shall not exceed 24 in. OC. Studs attached to floor and ceiling runners with 1/2 in. long Type S-12 steel screws on both sides of the studs or by welded or bolted connections designed in accordance with the AISI specifications.

2C. **Framing Members - Steel Studs —** (As an alternate to Item 2, For use with Item 5C) — Channel shaped, fabricated from min 20 MSG (0.0327 in. thick) corrosion-protected or galv steel, 3-1/2 in. min width, min 1-1/2 in. flanges and 1/4 in. return, spaced a max of 16 in. OC. Studs friction-fit into floor and ceiling runners. Studs to be cut 5/8 to 3/4 in. less than assembly height.

3. **Lateral Support Members —** (Not shown) — Where required for lateral support of studs, support shall be provided by means of steel straps, channels or other similar means as specified in the design of a particular steel stud wall system.

4. **Wood Structural Panel Sheathing —** (Optional, For use with Item 5 only) — (Not Shown) — 4 ft wide, 7/16 in. thick oriented strand board (OSB) or 15/32 in. thick structural I sheathing (plywood) complying with DOC PS1 or PS2, or APA PRP-108, manufactured with exterior glue. Sheathing applied vertically to the steel studs. Vertical joints centered on studs, and staggered one stud space from wallboard joints. Attached to studs with flat-head self-drilling tapping screws with a min. head diam. of 0.292 in. at maximum 6 in. OC. in the perimeter and 12 in. OC. in the field. When used, gypsum panels attached over OSB or plywood panels and fastener lengths for gypsum panels increased by min. 1/2 in. The maximum loading on the steel studs was evaluated with the steel studs braced at mid-height and not braced by the plywood sheathing.

5. **Gypsum Board* —** Gypsum panels with beveled, square or tapered edges, applied vertically or horizontally. Vertical joints centered over studs, and staggered centered vertically on opposite sides of studs. Vertical joints in adjacent layers (multilayer systems) staggered one stud cavity. Horizontal joints need not be backed by steel framing. Horizontal edge joints and horizontal butt joints on opposite sides of studs need not be staggered if maximum load is reduced to 90 percent of max stud capacity. When load is at 100 percent, horizontal edge joints and horizontal butt joints on opposite sides of studs staggered a min of 12 in. Horizontal edge joints and horizontal butt joints on opposite sides of studs need not be staggered at 100 percent load with Type ULX. Horizontal edge joints and horizontal butt joints in adjacent layers (multilayer systems) staggered a min of 12 in. Horizontal edge joints and horizontal butt joints in adjacent layers (multilayer systems) with Type ULX need not be staggered. When used in widths other than 48 in., gypsum panels to be installed horizontally. The thickness and number of layers and percent of design load for the 45 min, 1 hr, 1-1/2 hr, and 2 hr ratings are as follows:

Wallboard Protection on Each Side of Wall

Rating	No. of Layers & Thickness of Panel	% of Design Load
45 Min	1 layer, 1/2 in. thick	100
1 hr	1 layer, 5/8 in. thick	100
1-1/2 hr	2 layers, 1/2 in. thick	100
2 hr	2 layers, 5/8 in. thick	80
2 hr@	2 layers, 5/8 in. thick	100
2 hr	3 layers, 1/2 in. thick	100
2 hr	2 layers, 3/4 in. thick	100

@Rating applicable when Batts and Blankets (Item 7) are used.

CGC INC — 1/2 in. thick Type IP-X2, IPC-AR, C, WRC, or, 5/8 in. thick Type SCX, SHX, WRX, IP-X1, AR, C, IP-AR, IP-X2, IPC-AR, ULIX, ULX, or WRC; 3/4 in. thick Types AR, IP-AR, IP-X3, ULTRACODE

UNITED STATES GYPSUM CO — 1/2 in. thick Type C, IP-X2, IPC-AR, or WRC; 5/8 in. thick Type AR, C, FRX-G, IP-AR, IP-X1, IP-X2, IPC-AR, SCX, SGX, SHX, ULIX, ULX, WRX, or WRC; 3/4 in. thick Types AR, IP-AR or IP-X3, ULTRACODE

USG BORAL DRYWALL SFZ LLC — 1/2 in. Type C; 5/8 in. Types C, SCX, SGX, ULTRACODE

USG MEXICO S A DE C V — 1/2 in. thick Type C, IP-X2, IPC-AR, WRC; 5/8 in. thick Type AR, C, IP-AR, IP-X1, IP-X2, IPC-AR, SCX, SHX, ULX, WRX or WRC; 3/4 in. thick Types AR, IP-AR, IP-X3, ULTRACODE

5A. **Gypsum Board* —** (As an alternate to Item 5 when used as the base layer on one or both sides of wall, For direct attachment only, not to be used with Item 4) — Nom 5/8 in. or 3/4 in. may be used as alternate to all 5/8 in. or 3/4 in. shown in Item 5, Wallboard Protection on Each Side of Wall table. Nom 5/8 in. or 3/4 in. thick lead backed gypsum panels with beveled, square or tapered edges, applied vertically. Vertical joints centered over 20 MSG steel studs and staggered min 1 stud cavity on opposite sides of studs. See Items 1A, 2A.1, 8A(a). Wallboard secured to studs with 1-1/4 in. long Type S-12 steel screws spaced 8 in. OC at perimeter and 12 in. OC in the field. To be used with Lead Batten Strips (see Item 12) or Lead Discs or Tabs (see Item 13).
RAY-BAR ENGINEERING CORP — Type RB-LBG

5B. **Gypsum Board* —** (As an alternate to Items 5 and 5A) — Nom 5/8 in. thick gypsum panels with square edges, applied horizontally or vertically. For the hour single layer system -when the gypsum board panels are installed horizontally the joints need not be staggered on opposite sides of studs. Gypsum board secured to studs with 1-1/4 in. long Type S-12 bugle head steel screws spaced 8 in. OC at the top and bottom tracks and in the field with screws 1 in. and 4 in. from the horizontal joints. When the gypsum board panels are installed vertically all vertical joints must be centered over studs and staggered min 1 stud cavity on opposite sides of studs. Gypsum board secured to studs with 1-1/4 in. long Type S-12 steel screws spaced 8 in. OC to the top and bottom tracks and in the field with screws 1 in and 4 in. from the perimeter. For the 2 hour double layer system - when the gypsum board panels are installed horizontally the joints need not be staggered on opposite sides of assembly. Base layer secured on each side of the studs with 1-1/4 in. long Type S-12 bugle head steel screws spaced 16 in. OC to the top and bottom tracks and in the field with screws beginning 1 in. and 8 in. from the horizontal joints. Face layer horizontal joints staggered 8 in from base layer joints and secured with 1-5/8 in. long Type S-12 bugle head steel screws spaced 16 in. OC to the top and bottom tracks and in the field with screws beginning 1 in. and 8 in. from the horizontal joints. Face layer screws offset 8 in. from base layer screws. When the gypsum board panels are installed vertically all vertical joints must be centered over studs and staggered min 1 stud cavity on opposite sides of studs. Face layer gypsum boards secured to studs with 1-1/4 in. long Type S-12 steel screws spaced 16 in. OC with screws 2 in. and 16 in. from the perimeter. Base layer gypsum boards secured to studs with 1-1/4 in. long Type S-12 steel screws spaced 16 in. OC with screws 1-1/2 in and 8 in. from the perimeter. Face layer screws offset 8 in. from base layer screws.
CGC INC — Type USGX

UNITED STATES GYPSUM CO — 5/8 in. thick Type USGX (Joint tape and compound, Item 9, optional with Type USGX)

USG BORAL DRYWALL SFZ LLC — 5/8 in. thick Type USGX (Joint tape and compound, Item 9, optional with Type USGX)

USG MEXICO S A DE C V — Type USGX

5C. **Gypsum Board* —** (As an alternate to Item 5 when used as the base layer on one or both sides of wall, For direct attachment only, not to be used with Item 4) — Nominal 5/8 in. thick lead backed gypsum panels with beveled, square or tapered edges, applied vertically. Vertical joints centered over studs and staggered min 1 stud cavity on opposite sides of studs. Wallboard secured to studs with 1-1/4 in. long Type S-12 (or #6 by 1-1/4 in. long bugle head fine driller) steel screws spaced 8 in. OC at perimeter and 12 in. OC in the field.
NEW ENGLAND LEAD BURNING CO INC, DBA NELCO — Nelco

5D. **Gypsum Board* —** (As an alternate to Item 5 when used as the base layer on one or both sides of wall, For direct attachment only, not to be used with Item 4) — Nom 5/8 or 3/4 in. may be used as alternate to all 5/8 or 3/4 in. shown in Item 5, Wallboard Protection on Each Side of Wall table. Nom 5/8 or 3/4 in. thick lead backed gypsum panels with beveled, square or tapered edges, applied vertically. Vertical joints centered over 20 MSG steel studs and staggered min 1 stud cavity on opposite sides of studs. See Items 1A, 2A.1, 8A(a). Wallboard secured to studs with 1-1/4 in. long Type S-12 steel screws spaced 8 in. OC at perimeter and 12 in. OC in the field. To be used with Lead Batten Strips (see Item 12A) or Lead Discs (see Item 13A).
MAYCO INDUSTRIES INC — Type X-Ray Shielded Gypsum

5E. **Gypsum Board* —** (As an alternate to Item 5 when used as the base layer on one or both sides of wall, For direct attachment only, not to be used with Item 4) — Nom 5/8 in. may be used as alternate to all 5/8 in. shown in Item 5, Wallboard Protection on Each Side of Wall table. Nom 5/8 or 3/4 in. thick lead backed gypsum panels with beveled, square or tapered edges, applied vertically. Vertical joints centered over 20 MSG steel studs and staggered min 1 stud cavity on opposite sides of studs. See Items 1A, 2A.1, 8A(a). Wallboard secured to studs with 1-1/4 in. long Type S-12 steel screws spaced 8 in. OC at perimeter and 12 in. OC in the field. To be used with Lead Batten Strips (see Item 12A) or Lead Discs or Tabs (see Item 13A). Wallboard Protection on Each Side of Wall and 2 hr ratings are as follows:

Wallboard Protection on Each Side of Wall

Rating	No. of Layers & Thickness of Panel	% of Design Load
1 hr	1 layer, 5/8 in. thick	100
1-1/2 hr	2 layers, 1/2 in. thick	100
2 hr	2 layers, 5/8 in. thick	80
2 hr@	2 layers, 5/8 in. thick	100
2 hr	3 layers, 1/2 in. thick	100
2 hr	2 layers, 3/4 in. thick	100

@Rating applicable when Batts and Blankets (Item 7) are used.

CGC INC — 1/2 in. thick Type IP-X2, IPC-AR, C, WRC, or, 5/8 in. thick Type SCX, SHX, WRX, IP-X1, AR, C, IP-AR, IP-X2, IPC-AR, ULIX, ULX, or WRC; 3/4 in. thick Types AR, IP-AR, IP-X3, ULTRACODE

UNITED STATES GYPSUM CO — 1/2 in. thick Type C, IP-X2, IPC-AR, or WRC; 5/8 in. thick Type AR, C, FRX-G, IP-AR, IP-X1, IP-X2, IPC-AR, SCX, SHX, ULIX, ULX, or WRC; 3/4 in. thick Types AR, IP-AR or IP-X3, ULTRACODE

USG BORAL DRYWALL SFZ LLC — 1/2 in. Type C; 5/8 in. Types C, SCX, SGX, ULTRACODE

USG MEXICO S A DE C V — 1/2 in. thick Type C, IP-X2, IPC-AR, WRC; 5/8 in. thick Type AR, C, IP-AR, IP-X1, IP-X2, IPC-AR, SCX, SHX, ULX, WRX or WRC; 3/4 in. thick Types AR, IP-AR, IP-X3, ULTRACODE

6. **Fasteners —** (Not Shown) — For use with Item 5 - Type S-12 steel screws used to attach panels to runners (Item 1 or 1A) and studs (Item 2 or 2A) or furring channels (Item 8). **Single layer systems:** 1 in. long for 1/2 and 5/8 in. thick panels or 1-1/4 in. long for 3/4 in. thick panels, spaced 8 in. OC when panels are applied horizontally, or 12 in. OC when panels are applied vertically. **Single layer system with Type ULIX:** 1 in. long, spaced 12 in. OC along the perimeter and in the field when panels are applied horizontally or vertically. **Two layer systems:** First layer- 1 in. long for 1/2 and 5/8 in. thick panels or 1-1/4 in. long for 3/4 in. thick panels, spaced 16 in. OC. Second layer - 1-5/8 in. long for 1/2 in. and 5/8 in. thick panels or 2-1/4 in. long for 3/4 in. thick panels, spaced 16 in. OC with screws offset 8 in. from first layer. **Three-layer systems:** First layer- 1 in. long for 1/2 in. thick panels, spaced 24 in. OC. Second layer - 1-5/8 in. long for 1/2 in. thick panels, spaced 24 in. OC. Third layer- 2-1/4 in. long for 1/2 in. thick panels, spaced 12 in. OC. Screws offset min 6 in. from layer below.

7. **Batts and Blankets* —** (Required as indicated under Item 5) — Nom 2 in. thick mineral wool batts, friction fitted between studs and runners. **See Batts and Blankets (BKNV or BZJZ) Categories** for names of Classified companies.

7A. **Batts and Blankets* —** (Optional, Not Shown) — Placed in stud cavities, any glass fiber or mineral wool insulation bearing the UL Classification Marking as to Surface Burning Characteristics and/or Fire Resistance. See **Batts and Blankets (BKNV or BZJZ) Categories** for names of Classified companies.

7B. **Batts and Blankets* —** (Optional, Not Shown) — Placed in stud cavities, glass fiber insulation bearing the UL Classification Marking as to Surface Burning Characteristics and/or Fire Resistance.
Owens Corning Corporate Services, LLC — Type QuietZone Acoustic Batts

7C. **Fiber, Sprayed* —** (Optional) — As an alternate to Batts and Blankets (Item 7) — Not for use with Items 8A or 8B) — Spray applied mineral wool insulation. The fiber is applied with adhesive at a minimum density of 4.0 pcf, to completely fill the enclosed cavity in accordance with the application instructions supplied with the product. See Fiber, Sprayed (CCAU).
AMERICAN ROCKWOOL MANUFACTURING, LLC — Type Rockwool Premium Plus

8. **Furring Channels —** (Optional on one or both sides, not shown, for single or double layer systems) — Resilient furring channels fabricated from min 25 MSG corrosion-protected steel, spaced vertically a max of 24 in. OC. Flange portion attached to each intersecting stud with 1/2 in. long Type S-12 panhead steel screws. Not for use with type FRX-G gypsum panels and items 5A, 5C, 5D, or 5E.

8A. **Steel Framing Members (Not Shown)* —** (Optional on one or both sides, not shown, for single or double layer systems) — As an alternate to Item 8, furring channels and Steel Framing Members as described below:

a. **Furring Channels —** Formed of No. 25 MSG galv steel, 2-9/16 in. or 2-23/32 in. wide by 7/8 in. deep, spaced max. 24 in. OC perpendicular to studs. Channels secured to studs as described in Item b. Gypsum board attached to furring channels as described in item 6. Not for use with type FRX-G gypsum panels and items 5A, 5C, 5D, or 5E.

b. **Steel Framing Members* —** Used to attach furring channels (Item 8a) to studs (Item 2). Clips spaced max. 48 in. OC, and secured to studs with No. 8 x 1-1/2 in. minimum self-drilling, S-12 steel screw through the center grommet. Furring channels are friction fitted into clips. RSIC-1 clip for use with 2-9/16 in. wide furring channels. RSIC-1 (2.75) clip for use with 2-23/32 in. wide furring channels.
PAC INTERNATIONAL L L C — Types RSIC-1, RSIC-1 (2.75).

8B. **Steel Framing Members* —** (Not Shown) — Optional on one or both sides, not shown, for single or double layer systems) — As an alternate to Item 8, furring channels and Steel Framing Members as described below:

a. **Furring Channels —** Formed of No. 25 MSG galv steel, 2-3/8 in. wide by 7/8 in. deep, spaced max. 24 in. OC perpendicular to studs. Channels secured to studs as described in Item b. Gypsum board attached to furring channels as described in Item 6. Not for use with type FRX-G gypsum panels and items 5A, 5C, 5D, or 5E.

b. **Steel Framing Members* —** Used to attach furring channels to studs (Item 2). Clips spaced max. 48 in. OC, and secured to studs with No. 8 x 1-1/2 in. minimum self-drilling, S-12 steel screw through the center grommet. Furring channels are friction fitted into clips.
PLITEQ INC — Type GENIECLIP

8C. **Steel Framing Members* —** (Not Shown) — (Optional on one or both sides, not shown, for single or double layer systems) — As an alternate to Item 8, furring channels and Steel Framing Members as described below:

a. **Furring Channels —** Formed of No. 25 MSG galv steel, spaced max. 24 in. OC perpendicular to studs. Channels secured to studs as described in Item b. Ends of adjoining channels overlapped 6 in. and tied together with double strand of No. 18 AWG galvanized steel wire. Gypsum board attached to furring channels as described in Item 6. Not for use with type FRX-G gypsum panels and items 5A, 5C, 5D, or 5E.

b. **Steel Framing Members* —** Used to attach furring channels to studs (Item 2). Clips spaced max. 48 in. OC, and secured to studs with 2 in. coarse drywall screw with 1 in. diam washer through the center hole. Furring channels are friction fitted into clips.
STUDCO BUILDING SYSTEMS — RESILMOUNT Sound Isolation Clips - Type A237R

8D. **Steel Framing Members* —** (Not Shown) — (Optional on one or both sides, not shown, for single or double layer systems) — As an alternate to Item 8, furring channels and Steel Framing Members as described below:

a. **Furring Channels —** Formed of No. 25 MSG galv steel, spaced max. 24 in. OC perpendicular to studs. Channels secured to studs as described in Item b. Ends of adjoining channels overlapped 6 in. and tied together with double strand of No. 18 AWG galvanized steel wire. Gypsum board attached to furring channels as described in Item 6. Not for use with type FRX-G gypsum panels and items 5A, 5C, 5D, or 5E.

b. **Steel Framing Members* —** Used to attach furring channels to studs (Item 2). Clips spaced max. 48 in. OC, and secured to studs with 2 in. coarse drywall screw through the center hole. Furring channels are friction fitted into clips.
RESILIENT MOUNTING PRODUCTS INC — Type RPP - Lead Lined Drywall

8E. **Steel Framing Members* —** (Not Shown) — (Optional on one or both sides, not shown, for single or double layer systems) — As an alternate to Item 8, resilient channels and Steel Framing Members as described below:

a. **Resilient Channels** — Formed of No. 25 MSG galv steel, spaced 24 in. OC, and perpendicular to studs. Channels secured to studs as described in Item b. Ends of adjoining channels overlapped 6 in. and secured in place with two No. 8 x 1/2 in. Phillips Modified Truss screws spaced 2-1/2 in. from the center of the overlap. Gypsum board attached to resilient channels as described in Item 6. Not for use with type FRX-G gypsum panels and items 5A, 5C, 5D, or 5E.

b. **Steel Framing Members* —** Used to attach resilient channels (Item 8Ea) to studs. Clips spaced 48 in. OC., and secured to studs with No. 8 x 2-1/2 in. coarse drywall screw through the center hole. Resilient channels are secured to clips with one No. 10 x 1/2 in. pan-head self-drilling screw.
KEENE BUILDING PRODUCTS CO INC — Type RC+ Assurance Clip

8F. **Steel Framing Members* —** (Optional on one or both sides, not shown, for single or double layer systems) — As an alternate to Item 8, furring channels and Steel Framing Members as described below:

a. **Furring Channels —** Formed of No. 25 MSG galv steel, 2-23/32 in. wide by 7/8 in. deep, spaced 24 in. OC perpendicular to studs. Channels secured to studs as described in Item b. Ends of adjoining channels are overlapped 6 in. and tied together with double strand of No. 18 SWG galv steel wire near each end of overlap. As an alternate, ends of adjoining channels may be overlapped 6 in. and secured together with two self-tapping #6 framing screws, min. 7/16 in. long at the midpoint of the overlap, with one screw on each flange of the channel. Gypsum board attached to furring channels as described in Item 6. Not for use with type FRX-G gypsum panels and items 5A, 5C, 5D, or 5E.

b. **Steel Framing Members* —** Used to attach furring channels (Item 8Fa) to studs. Clips spaced maximum 48 in. OC. Clips secured to studs with No. 8 x 2-1/2 in. coarse drywall screw through the center grommet. Furring channels are friction fitted into clips.

CLARKDIETRICH BUILDING SYSTEMS — Type ClarkDietrich Sound Clip

8G. **Steel Framing Members* —** (Optional on one or both sides, not shown, for single or double layer systems) — As an alternate to Item 8, furring channels and Steel Framing Members as described below:

a. **Furring Channels —** Formed of No. 25 MSG galv steel, 2-23/32 in. wide by 7/8 in. deep, spaced 24 in. OC perpendicular to studs. Channels secured to studs as described in Item b. Ends of adjoining channels are overlapped 6 in. and tied together with double strand of No. 18 SWG galv steel wire near each end of overlap. As an alternate, ends of adjoining channels may be overlapped 6 in. and secured together with two self-tapping #6 framing screws, min. 7/16 in. long at the midpoint of the overlap, with one screw on each flange of the channel. Gypsum board attached to furring channels as described in Item 6. Not for use with type FRX-G gypsum panels and items 5A, 5C, 5D, or 5E.

b. **Steel Framing Members* —** Used to attach furring channels (Item 8Ga) to studs. Clips spaced 48 in. OC. staggered on adjacent furring channels and secured to studs with one No. 8 x 2-1/2 in. screw and washer through the center hole. Furring channels are friction fitted into clips.
ISOTECH INDUSTRIES INC. — Type ISOSTUD

9. **Joint Tape and Compound —** Vinyl or casein, dry or premixed joint compound applied in two coats to joints and screw heads of outer layers. Paper tape, nom 2 in. wide, embedded in first layer of compound over all joints of outer layers. Paper tape and joint compound may be omitted when gypsum boards are supplied with square edges.

10. **Siding, Brick or Stucco —** (Optional, Not Shown) — Aluminum, vinyl or steel siding, brick veneer or stucco, meeting the requirements for gypsum sheathing. Wall veneer attached to studs with corrugated metal wall ties attached to each stud with steel screws, not more than each sixth course of brick.

11. **Caulking and Sealants* —** (Optional, Not Shown) — A bead of acoustical sealant applied around the partition perimeter for sound control.
UNITED STATES GYPSUM CO — Type AS

12. **Lead Batten Strips —** (Not Shown, For Use With Item 5A) — Lead batten strips, min 1-1/2 in. wide, max 10 ft long with a max thickness of 0.025 in. Strips placed on the interior face of studs and attached from the exterior face of the stud with two 1 in. long Type S-12 pan head steel screws, one at the top of the strip and one at the bottom of the strip. Lead batten strips to have a purity of 99.9% meeting the Federal specification QQ-L-201f, Grade "C". Lead batten strips required behind vertical joints of lead backed gypsum wallboard (Item 5A) and optional at remaining stud locations. Required behind vertical joints.

12A. **Lead Batten Strips —** (Not Shown, for use with Item 5D) — Lead batten strips, 2 in. wide, max 10 ft long with a max thickness of 0.140 in. Strips placed on the face of studs and attached to the stud with two min. 1 in. long min. Type S-8 pan head steel screws, one at the top of the strip and one at the bottom of the strip or with one min. 1 in. long min. Type S-9 pan head steel screw at the top of the strip. Lead batten strips to have a purity of 99.5% meeting the Federal specification QQ-L-201f, Grades "B, C or D". Lead batten strips required behind vertical joints of lead backed gypsum wallboard (Item 5D) and optional at remaining stud locations.

13. **Lead Discs or Tabs —** (Not Shown, For Use With Item 5A) — Used in lieu of or in addition to the lead batten strips (Item 12) or optional at other locations - Max 3/4 in. diam by max 0.125 in. thick lead discs compression fitted or adhered over steel screw heads or max 12 in. by 1-1/4 in. by max 0.125 in. thick lead tabs placed on gypsum boards (Item 5A) underneath screw locations prior to the installation of the screws. Lead discs or tabs to have a purity of 99.9% meeting the Federal specification QQ-L-201f, Grade "C".

13A. **Lead Discs —** (Not Shown, for use with Item 5D) — Max 5/16 in. diam by max 0.140 in. thick lead discs compression fitted or adhered over steel screw heads. Lead discs to have a purity of 99.5% meeting the Federal Specification QQ-L-201f, Grades "B, C or D".

14. **Lead Batten Strips —** (Not Shown, For Use With Item 5C) — Lead batten strips, 2 in. wide, max 10 ft long with a max thickness of 0.142 in. Strips placed on the face of studs and attached to the stud with two min. 1 in. long min. Type S-8 pan head steel screws, one at the top of the strip and one at the bottom of the strip or with one min. 1 in. long min. Type S-9 pan head steel screw at the top of the strip. Lead batten strips to have a purity of 99.9% meeting the Federal specification QQ-L-201f, Grade "C". Lead batten strips required behind vertical joints of lead backed gypsum wallboard (Item 5C) and optional at remaining stud locations.

15. **Lead Tabs —** (Not Shown, For Use With Item 5C) — 2 in. wide, 5 in. long with a max thickness of 0.142 in. Tabs friction-fit around front face of stud, the stud folded back flange, and the back face of the stud. Tabs required at each location where a screw (that secures the gypsum boards, Item 5C) will penetrate the steel stud. Lead tabs to have a purity of 99.9% meeting the Federal specification QQ-L-201f, Grade "C". Lead tabs may be held in place with standard adhesive tape if necessary.

16. **Wall and Partition Facings and Accessories* —** (C1DV) (Optional, Not Shown) — For use with Item 1, Item 2 to 2C, Item 3, Item 5,Item 6, Item 7A, Item 8 and Item 9. For a maximum fire rating of 1 hour. On one side of the wall, over the first layer of Gypsum Board (Item 5), install Reflektor membrane with the gold side facing outwards. Membrane installed with 150 staples spaced 12 inches on center in both directions as per manufacturer's instructions, seams in membrane to be overlapped by 2 inches, when Reflector membrane is used an additional layer of Gypsum Board identical to the one used in the first layer and as specified in Item 5 shall be installed over the membrane. Additional layer of Gypsum Board to be installed through the membrane to the stud as specified in Item 5 except the fastener length shall be increased by a minimum of 5/8 inch. Install Batts and Blankets in the stud cavity as per Item 7A.

On the other side of the wall prior to the installation of the Gypsum Board Install Resilient Channels as per Item 8. Over the Resilient Channels install 3/4 inch thick SONOpan panel secured to the Resilient Channels with min. 1-1/4 in. long drywall screws and washers spaced at 16 in. OC on the perimeter of the panel and 8 in. OC in the field of the panel. Over the SONOpan panels install the same Gypsum Board as specified in Item 5 with the fastener length increased by minimum 3/4 inch. Not evaluated or intended as a substitute for the required layer(s) of UL Classified Gypsum Board.

Alternately, on the other side of the wall prior to the installation of the Gypsum Board (Item 5), install 3/4 in. thick SONOpan panels, secured to one side of studs either horizontally or vertically. Panels secured to each stud with min. 1-1/4 in. long drywall screws spaced 12 in. OC. Over the SONOpan, install 25 MSG galv steel, Resilient Channels, spaced vertically 24 in. OC. Resilient Channels fastened through panels to each stud with min. 2 in. long drywall screws or self-tapping screws. Over the Resilient Channels install Gypsum Board as specified in Item 5 with drywall screws as specified in Item 5. Panels not evaluated or intended as a substitute for the required layer(s) of UL Classified Gypsum Board.

MSL — Reflektor membrane, SONOpan panel.

17. **Foamed Plastic* —** (Optional — only for use with Item 5F, Not Shown, As an alternate to Item 7) Spray applied, foamed plastic insulation, at any thickness from partial fill to completely filling stud cavity. When foamed plastic is used, minimum stud depth shall be 3-1/2 in. with minimum 20 MSG steel thickness.

CARLISLE SPRAY FOAM INSULATION — Types SealTite ONE, SealTite Pro Closed Cell (CC), SealTite Pro Open Cell (OC), SealTite Pro OCX, SealTite Pro No Trim 21, SealTite Pro One Zero, Foamulate Closed Cell, Foamulate OCX, Foamulate 70, and Foamulate HFO

18. **Foamed Plastic* -** (Optional, Not Shown, Only for use with Item 5F, As an alternate to Item 7) Spray applied, foamed plastic insulation, at any thickness from partial fill to completely filling stud cavity. When foamed plastic is used, minimum stud depth shall be 3-1/2 in. with minimum 20 MSG steel thickness.

BASF CORP - Enertite® NM, Enertite® Q, FI778®, Sprayfoam® 178, Sprayfoam® 81206, Walltite® 200, Walltite® US, Walltite® US-N, Walltite® HP+, Walltite® MAX, Walltite® LWP, Walltite® Plus, Walltite® One and Enertite® Max

18A. **Foamed Plastic* -** (Optional, Not Shown, Only for use with Item 5G, As an alternate to Item 7) Spray applied, foamed plastic insulation, at any thickness from partial fill to completely filling stud cavity. When foamed plastic is used, minimum stud depth shall be 3-1/2 in. with minimum 20 MSG steel thickness.

BASF CORP - Walltite® v.5

*** Indicates such products shall bear the UL or cUL Certification Mark for jurisdictions employing the UL or cUL Certification (such as Canada), respectively.**

Last Updated on 2025-08-08

Design No. P521

November 14, 2019

Restrained Assembly Rating — 1, 1-1/2 and 2 Hr. (See Items 3A, 5, 5A, 5B, 5C, 5D, 8 and 8A)
Unrestrained Assembly Rating — 1, 1-1/2 and 2 Hr. (See Items 3A, 5, 5A, 5B 5C, 5D, 8 and 8A)
This design was evaluated using a load design method other than the Limit States Design Method (e.g., Working Stress Design Method). For jurisdictions employing the Limit States Design Method, such as Canada, a load restriction factor shall be used — See Guide EXUV or EXUV7

*** Indicates such products shall bear the UL or cUL Certification Mark for jurisdictions employing the UL or cUL Certification (such as Canada), respectively.**

1. **Structural Steel Members* —** Pre-fabricated light gauge steel truss system consisting of cold-formed, galvanized steel chord and web sections. Trusses fabricated in various sizes, depths, and from various steel thicknesses. Trusses spaced a max of 48 in. OC.
AEGIS METAL FRAMING, DIV OF MITEK — Ultra-Span, Pre-fabricated Light Gauge Steel Truss System

2. **Bridging —** (Not Shown) — Location of lateral bracing for truss chord and web sections to be specified on truss engineering.

3. **Steel Floor and Form Units —** (Classified or Unclassified) — Corrugated or fluted steel form units, min 22 MSG painted or galv steel, welded or mechanically fastened max 12 in. OC to truss-top chords.

4. **Cementitious Backer Units* —** Nom 1/2 or 5/8 in. thick sheets. End-joints to occur over crests of steel roof deck with end-joints staggered in adjacent rows. Units loosely laid, adhered or mechanically attached to steel roof deck.
UNITED STATES GYPSUM CO — Type DCB.

4A. **Gypsum Board —** (Classified or Unclassified) — (Not Shown) — As an alternate to Item 4, Gypsum sheathing, min 1/2 in. thick, applied perpendicular to steel roof deck. End joints to occur over crests of steel roof deck. Sheathing loosely laid, adhered or mechanically attached to steel roof deck. See Gypsum Board (CKNX) category for names of Classified companies.

5. **Roof Insulation — Foamed Plastic* —** Any polyisocyanurate foamed plastic insulation boards bearing the UL Classification Marking, Min thickness is 1 in. for the 1 hr assembly ratings, 2 in. for the 1-1/2 hr assembly ratings and 4 in. for the 2 hr ratings, with no limit on max overall thickness. Boards installed over the cementitious backer units (Item 4) or gypsum sheathing (Item 4A), with the end-joints staggered in adjacent rows. When applied in more than one layer, each layer of board to be offset in both directions from layer below in order to lap all joints. Boards loosely laid, adhered or mechanically fastened to cementitious backer units or gypsum sheathing, and to steel roof deck (Item 3). See Foamed Plastic (BRYX) category in the Building Materials Directory or Foamed Plastic (CCVW) category in the Fire Resistance Directory.

5A. **Roof Insulation — Foamed Plastic* —** (Not Shown) — As an alternate to Item 5 — For 1 and 1-1/2 hr ratings only — Any polystyrene foamed plastic insulation boards bearing the UL Classification Marking. Min thickness is 1 in. for the 1 hr assembly ratings, and 2 in. for the 1-1/2 hr assembly ratings, with no limit on max overall thickness. Boards installed over the cementitious backer units (Item 4) or gypsum sheathing (Item 4A), with the end-joints staggered in adjacent rows. When applied in more than one layer, each layer or board to be offset in both directions from layer below in order to lap all joints. Boards loosely laid, adhered or mechanically fastened to cementitious backer units or gypsum sheathing, and to steel roof deck (Item 3). See Foamed Plastic (BRYX) category in the Building Materials Directory or Foamed Plastic (CCVW) category in the Fire Resistance Directory.

5B. **Roof Insulation — Mineral and Fiber Boards* —** (Not Shown) — As an alternate to Item 5 — Mineral wool, glass fiber or perlite insulation boards, 24 by 48 in. min size, applied in one or more layers. Min thickness is 1 in. for the 1 hr assembly ratings, 2 in. for the 1-1/2 hr assembly ratings and 3 in. for the 2 hr ratings, with no limit on max overall thickness. Boards installed over the cementitious backer units (Item 4) or gypsum sheathing (Item 4A), with the end-joints staggered in adjacent rows. When applied in more than one layer, each layer of board to be offset from layer below in order to lap all joints. Boards loosely laid, adhered or mechanically fastened to cementitious backer units or gypsum sheathing, and to steel roof deck (Item 3).
See Mineral and Fiber Boards (BQXR) Category in the Building Materials Directory or Mineral and Fiber Boards (CSXR) Category in the Fire Resistance Directory.

5C. **Roof Insulation — Building Units* — (Not Shown) —** As an alternate to Item 5--Any polyisocyanurate foamed plastic insulation foaled on the top surface with oriented strand board or faced on the underside or both sides with wood fiber cellulose facers bearing the UL Classification Marking for Fire Resistance. No min thickness of the polyisocyanurate foamed plastic core required for the 1 hr assembly ratings, min 2 in. polyisocyanurate foamed plastic core for the 1-1/2 hr assembly ratings and min 4 in. polyisocyanurate foamed plastic core for the 2 hr rating with no limit on max overall thickness. Boards installed over the cementitious backer units (Item 4) or gypsum sheathing (Item 4A), with the end-joints staggered in adjacent rows. When applied in more than one layer, each layer of board to be offset in both directions from layer below in

GENERAL NOTES

A. -

SHEET NOTES / LEGEND

1. -

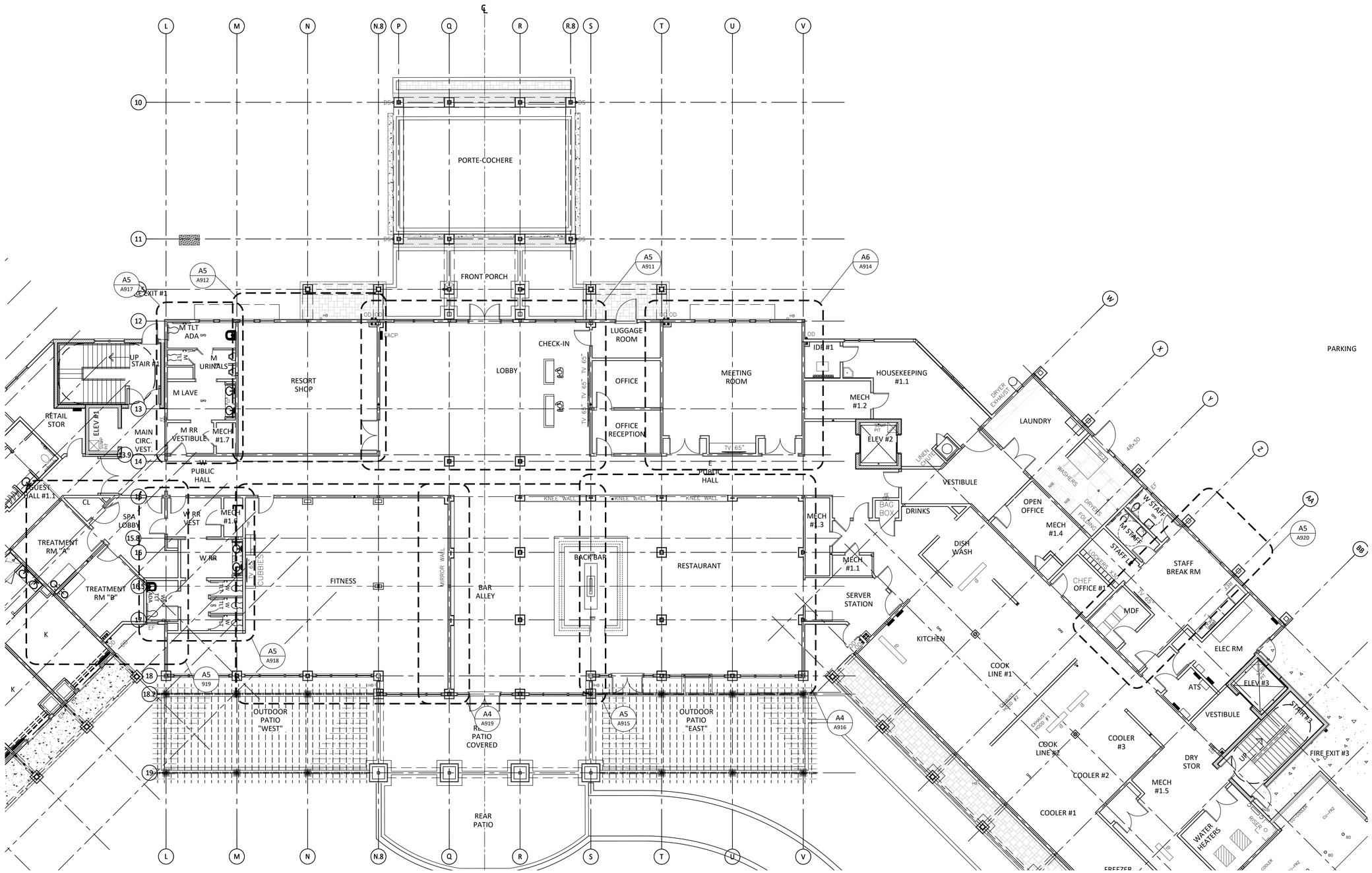

A1	INTERIOR KEY PLAN: LEVEL 100
A901	1/8" = 1'-0"

KUO DIEDRICH CHI

730 PEACHTREE STREET, NE
STUDIO 325
ATLANTA, GEORGIA 30308
678.244.6270

www.KDCarchitects.com

ARCHITECT:

ARCH. REG: AR91344

CONSULTANT:

REVISIONS

DATE:	DESCRIPTION:
10/18/24	SCHEMATIC DESIGN
6/5/25	DESIGN DEVELOPMENT
10/23/25	50% CONSTRUCTION DOCS
11/14/25	PERMIT SET

PROJECT:

SERENITY SEASIDE RESORT

BUILDING #1

THE INN

186 SOUTH BAY SHORE DRIVE, EASTPOINT, FL 32328

Serenity Seaside Operations, LLC
174 Watercolor Way, PMB 410
Santa Rosa Beach, Florida 32459

JOB NUMBER: 23019.1

DATE: --/--/----

TITLE: INTERIOR KEY PLAN: LEVEL 100

SHEET: A901

K:\Projects\23\23019\DWGs\Serenity_Bldg-1_inn\Sheets\23019.1-A901.dwg Plotted: Nov 13, 2025 – 6:34pm by ColebLawrence

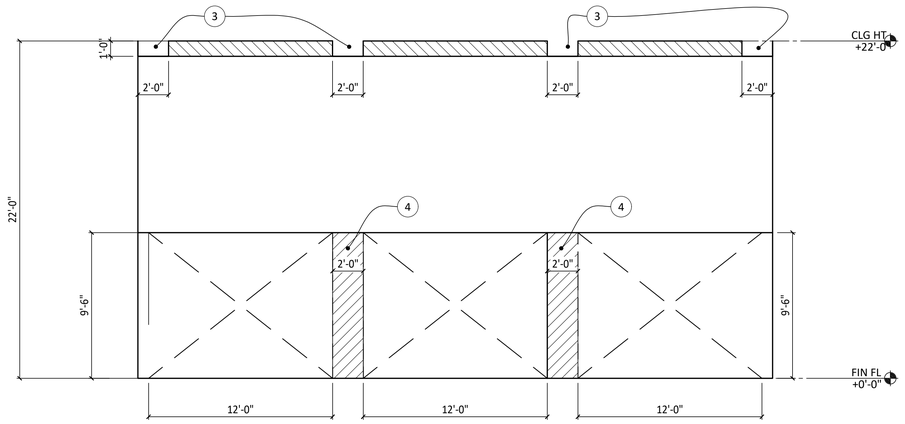

E1	INTERIOR ELEVATION @ LOBBY (SOUTH)
A911	1/4" = 1'-0"

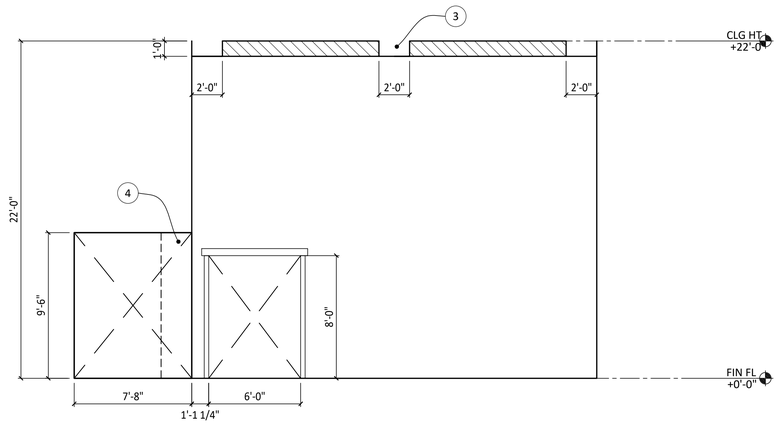

E4	INTERIOR ELEVATION @ LOBBY (WEST)
A911	1/4" = 1'-0"

SHEET NOTES / LEGEND

1. MILLWORK @ CHECK-IN, BY OWNER
2. MILLWORK DISPLAY WALL, BY OWNER
3. WOOD CEILING BEAMS, BY OWNER
4. WOOD COLUMNS, BY OWNER

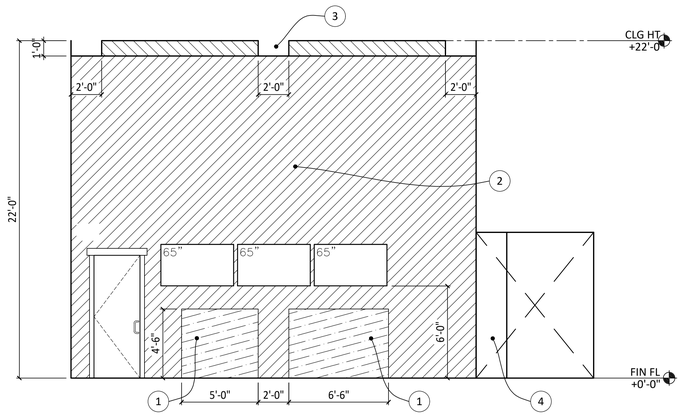

C2	INTERIOR ELEVATION @ LOBBY (EAST)
A911	1/4" = 1'-0"

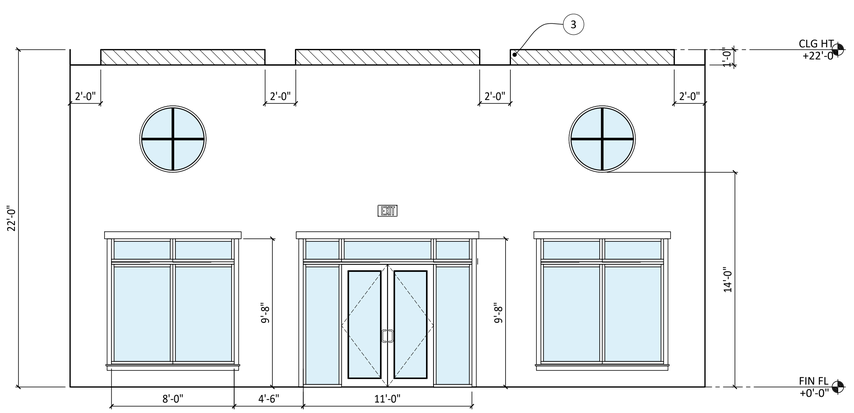

A2	INTERIOR ELEVATION @ LOBBY (NORTH)
A911	1/4" = 1'-0"

GENERAL NOTES

A. -

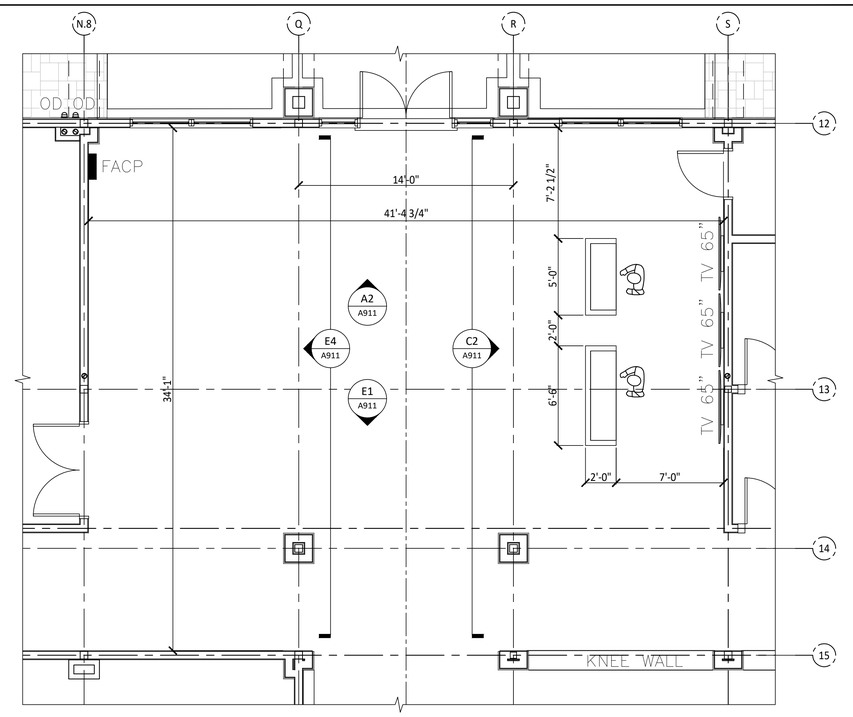

A5	FLOOR PLAN: LEVEL 100 - LOBBY
A911	1/4" = 1'-0"

PROJECT NORTH

KUO DIEDRICH CHI

730 PEACHTREE STREET, NE
STUDIO 325
ATLANTA, GEORGIA 30308
678.244.6270

www.KDCarchitects.com

ARCHITECT:

ARCH. REG: AR91344

CONSULTANT:

REVISIONS

DATE:	DESCRIPTION:
10/18/24	SCHEMATIC DESIGN
6/5/25	DESIGN DEVELOPMENT
10/23/25	50% CONSTRUCTION DOCS
11/14/25	PERMIT SET

PROJECT:

SERENITY SEASIDE RESORT

BUILDING #1

THE INN

186 SOUTH BAY SHORE DRIVE, EASTPOINT, FL 32328

Serenity Seaside Operations, LLC
174 Watercolor Way, PMB 410
Santa Rosa Beach, Florida 32459

JOB NUMBER: 23019.1

DATE: --/--/----

TITLE: INTERIOR ELEV @ LOBBY

SHEET: A911

K:\Projects\23\23019\DWGs\Serenity_Bldg-1_inn\Sheets\23019.1-A911.dwg Plotted: Nov 13, 2025 - 6:35pm by ColebLawrence

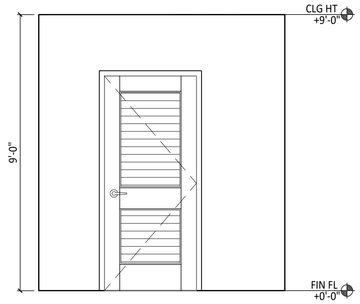

E1	INT ELEV @ W TLT ADA 116d (EAST)
A912	1/2" = 1'-0"

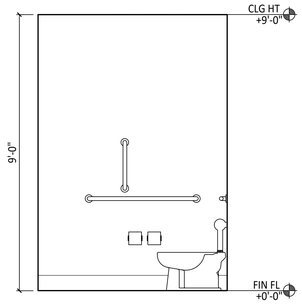

E2	INT ELE @ W TLT ADA 116d (SOUTH)
A912	1/2" = 1'-0"

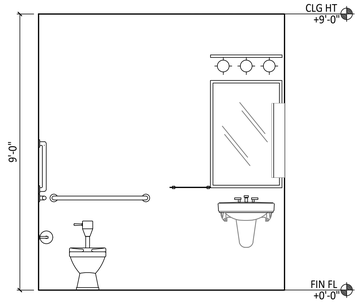

E4	INT ELEV @ W TLT ADA 116d (WEST)
A912	1/2" = 1'-0"

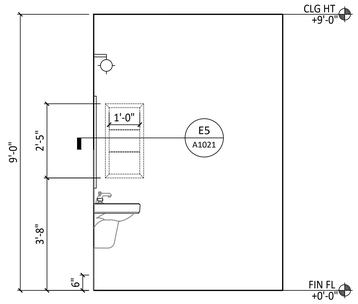

E5	INT ELE @ W TLT ADA 116d (NORTH)
A912	1/2" = 1'-0"

SHEET NOTES / LEGEND

1. DECORATIVE MIRROR, BY OWNER

GENERAL NOTES

A. FINISH SCHEDULE (BY ID) ON SHEET A1111

B. FINISH SELECTIONS (BY ID) ON SHEET A1112

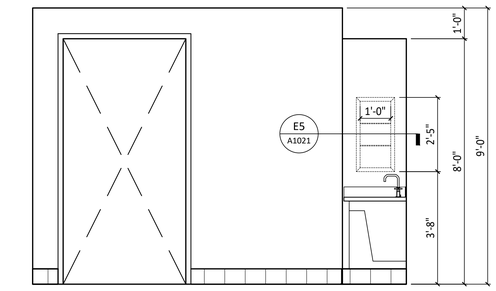

D2	INTERIOR ELEVATION @ WOMEN #116 (NORTH)
A912	1/2" = 1'-0"

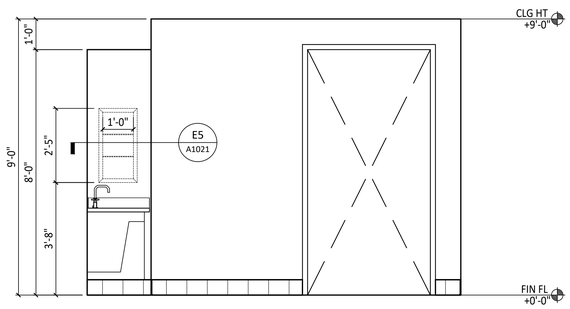

B2	INTERIOR ELEVATION @ WOMEN #116 (SOUTH)
A912	1/2" = 1'-0"

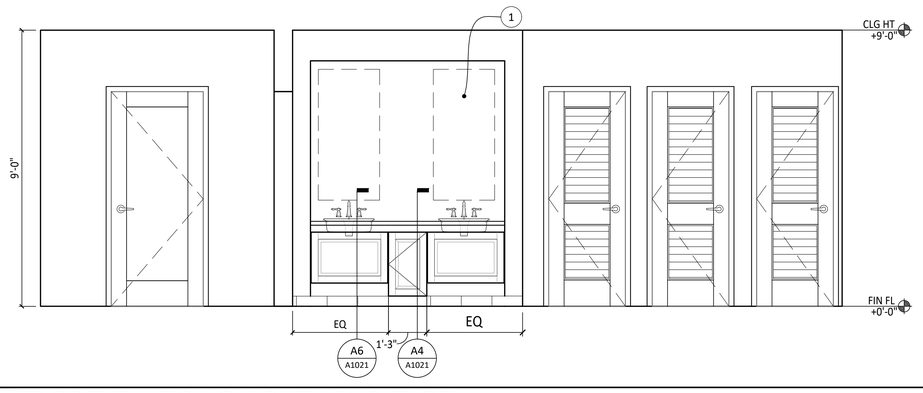

A1	INTERIOR ELEVATION @ WOMEN #116 (EAST)
A912	1/2" = 1'-0"

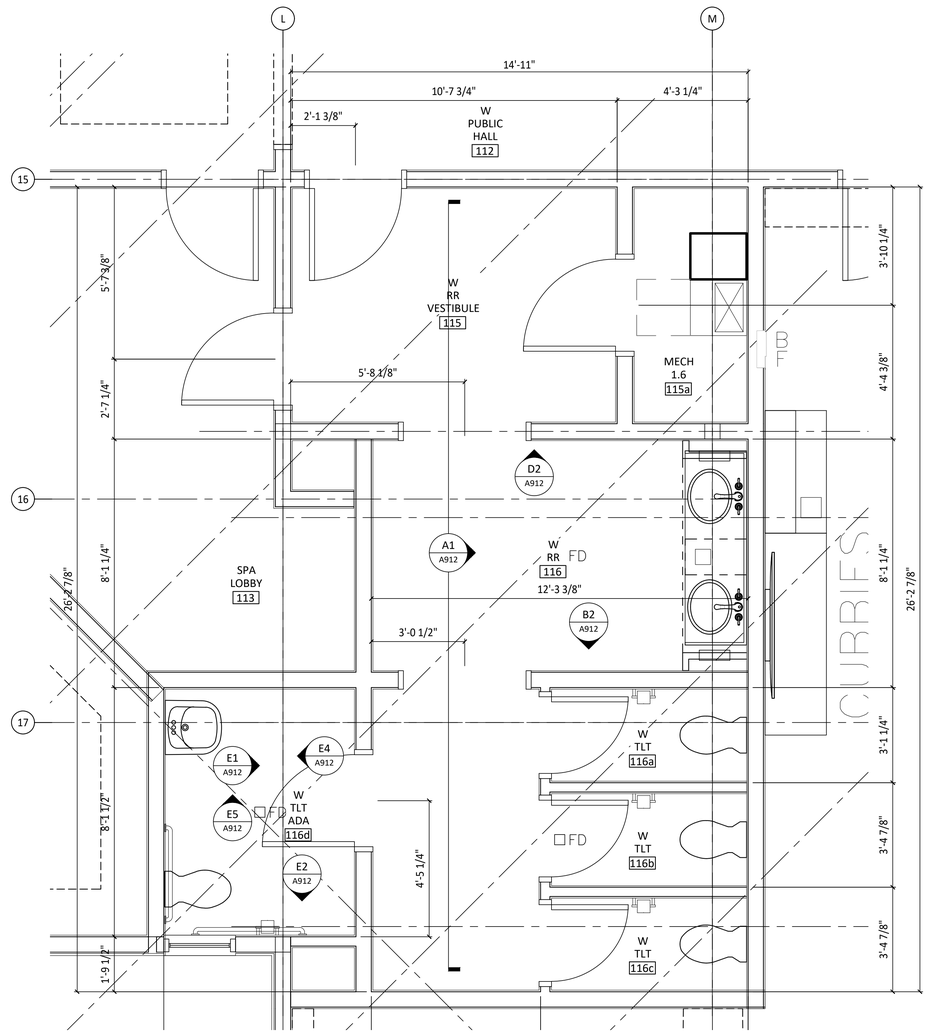

A4	DETAILED PLAN @ LEVEL 100 - RESTROOMS - WOMEN
A912	1/2" = 1'-0"

KUO DIEDRICH CHI

730 PEACHTREE STREET, NE
STUDIO 325
ATLANTA, GEORGIA 30308
678.244.6270

www.KDCarchitects.com

ARCHITECT:

ARCH. REG: AR91344

CONSULTANT:

REVISIONS

DATE:	DESCRIPTION:
10/18/24	SCHEMATIC DESIGN
6/5/25	DESIGN DEVELOPMENT
10/23/25	50% CONSTRUCTION DOCS
11/14/25	PERMIT SET

PROJECT:

SERENITY SEASIDE RESORT

BUILDING #1

THE INN

186 SOUTH BAY SHORE DRIVE, EASTPOINT, FL 32328

Serenity Seaside Operations, LLC
174 Watercolor Way, PMB 410
Santa Rosa Beach, Florida 32459

JOB NUMBER: 23019.1

DATE: --/--/----

TITLE: INTERIOR ELEV @ RESTROOMS - WOMEN

SHEET: A912

K:\Projects\23\23019\DWGs\Serenity_Bldg-1_Inn\Sheets\23019.1-A912.dwg Plotted: Nov 13, 2025 - 6:35pm by CodeLawrence

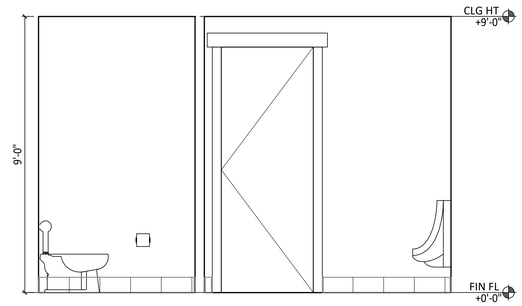

E4	INT ELEV @ M TLT #118a (NORTH)
A913	1/2" = 1'-0"

SHEET NOTES / LEGEND

1. INFILL SPANDREL GLASS WINDOW w/ MTL STUD & GYP BD

GENERAL NOTES

A. FINISH SCHEDULE (BY ID) ON SHEET A1111

B. FINISH SELECTIONS (BY ID) ON SHEET A1112

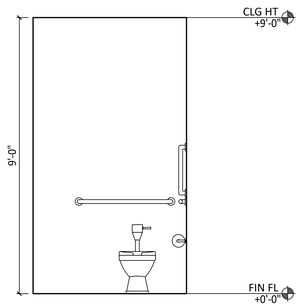

D1	INT ELE @ M ADA TLT #118c (WEST)
A913	1/2" = 1'-0"

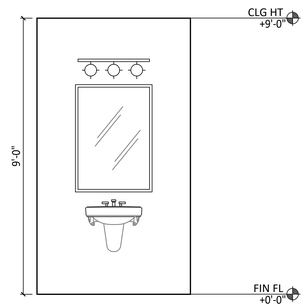

D3	INT ELEV @ M TLT ADA #118c (EAST)
A913	1/2" = 1'-0"

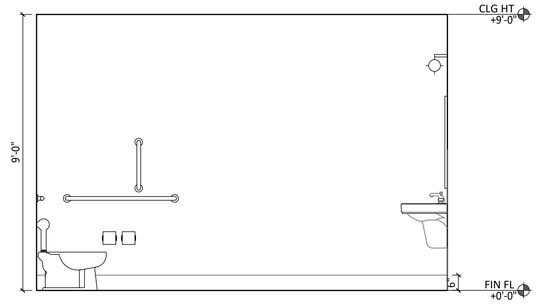

B1	INT ELEV @ M ADA TLT #118c (NORTH)
A913	1/2" = 1'-0"

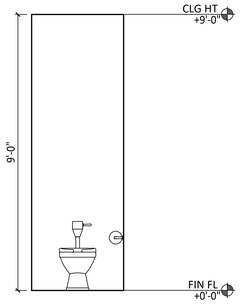

B3	INT ELEV @ M TLT #118b (WEST)
A913	1/2" = 1'-0"

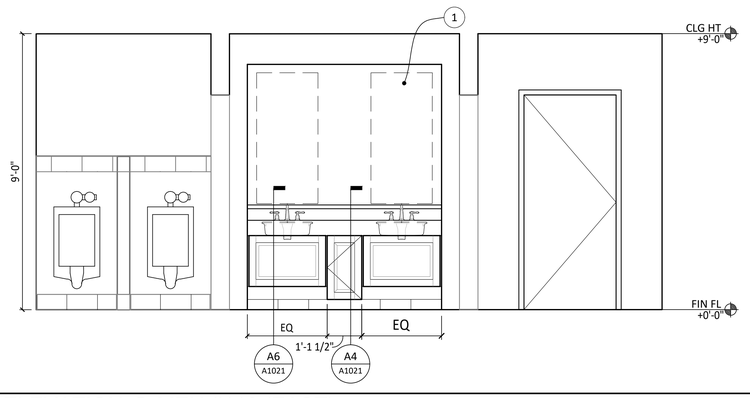

A1	INTERIOR ELEVATION @ MEN #118 (EAST)
A913	1/2" = 1'-0"

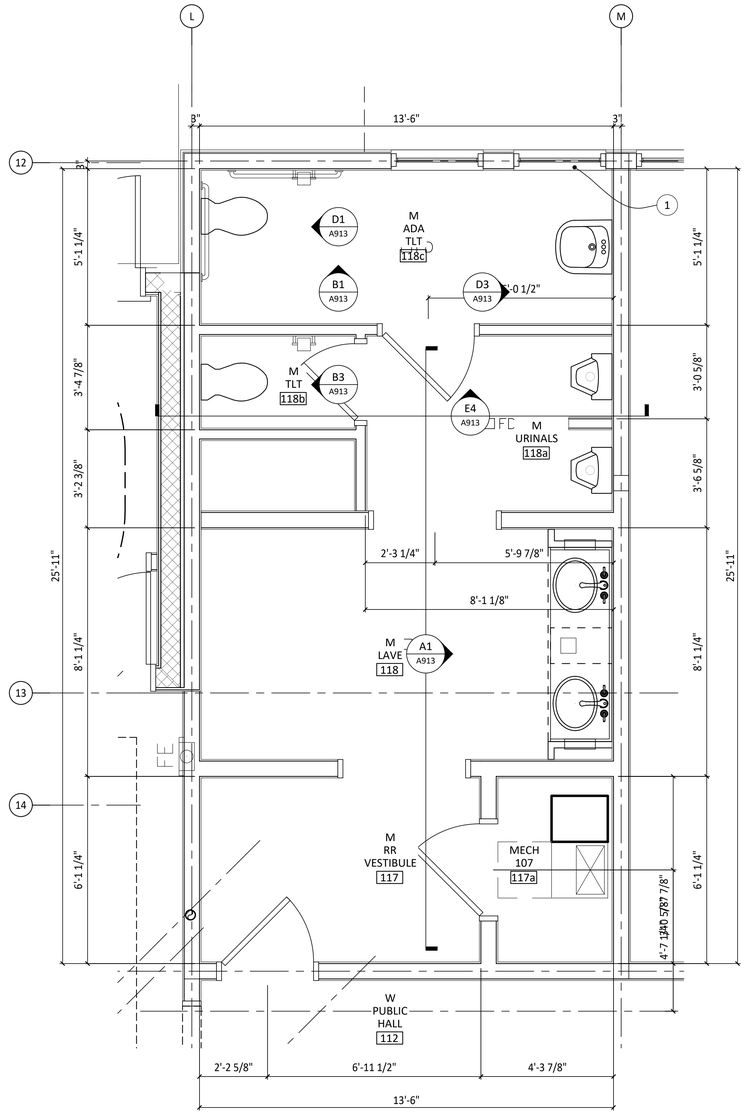

A4	DETAILED PLAN @ LEVEL 100 - RESTROOMS
A913	1/2" = 1'-0"

KUO DIEDRICH CHI

730 PEACHTREE STREET, NE
STUDIO 325
ATLANTA, GEORGIA 30308
678.244.6270

www.KDCarchitects.com

ARCHITECT:

ARCH. REG: AR91344

CONSULTANT:

REVISIONS

DATE:	DESCRIPTION:
10/18/24	SCHEMATIC DESIGN
6/5/25	DESIGN DEVELOPMENT
10/23/25	50% CONSTRUCTION DOCS
11/14/25	PERMIT SET

PROJECT:

SERENITY SEASIDE RESORT

BUILDING #1

THE INN

186 SOUTH BAY SHORE DRIVE, EASTPOINT, FL 32328

Serenity Seaside Operations, LLC
174 Watercolor Way, PMB 410
Santa Rosa Beach, Florida 32459

JOB NUMBER: 23019.1

DATE: --/--/----

TITLE: INTERIOR ELEV @ RESTROOMS - MEN

SHEET: A913

K:\Projects\23\23019\DWGs\Serenity_Bldg-1_inn\Sheets\23019.1-A913.dwg Plotted: Nov 13, 2025 - 6:38pm by ColebLawrence

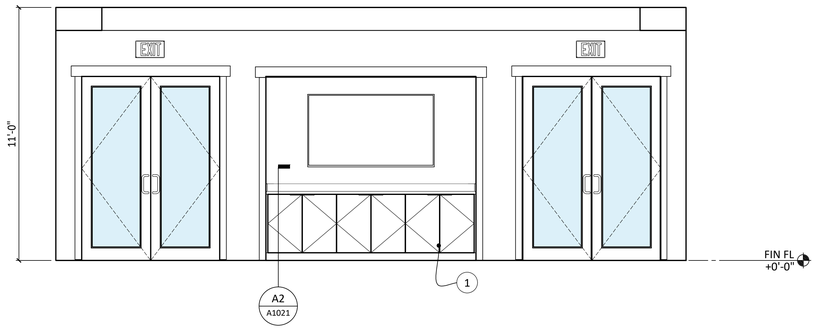

E1	INT ELEV @ MEETING RM - SOUTH
A914	3/8" = 1'-0"

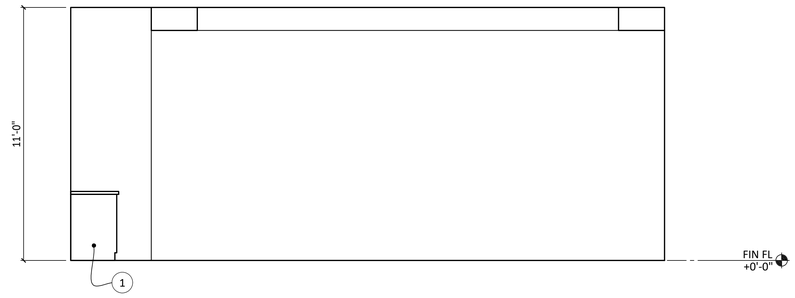

E4	INT ELEV @ MEETING RM - WEST
A914	3/8" = 1'-0"



C2	INT ELEV @ MEETING RM - EAST
A914	3/8" = 1'-0"

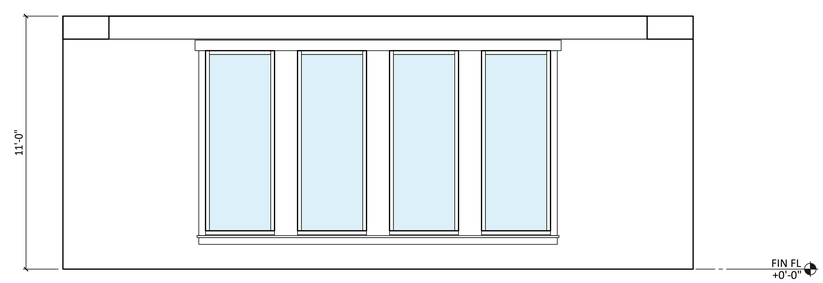

A2	INT ELEV @ MEETING RM - NORTH
A914	3/8" = 1'-0"

SHEET NOTES / LEGEND

1. MILLWORK CABINET, BY OWNER

GENERAL NOTES

A. -

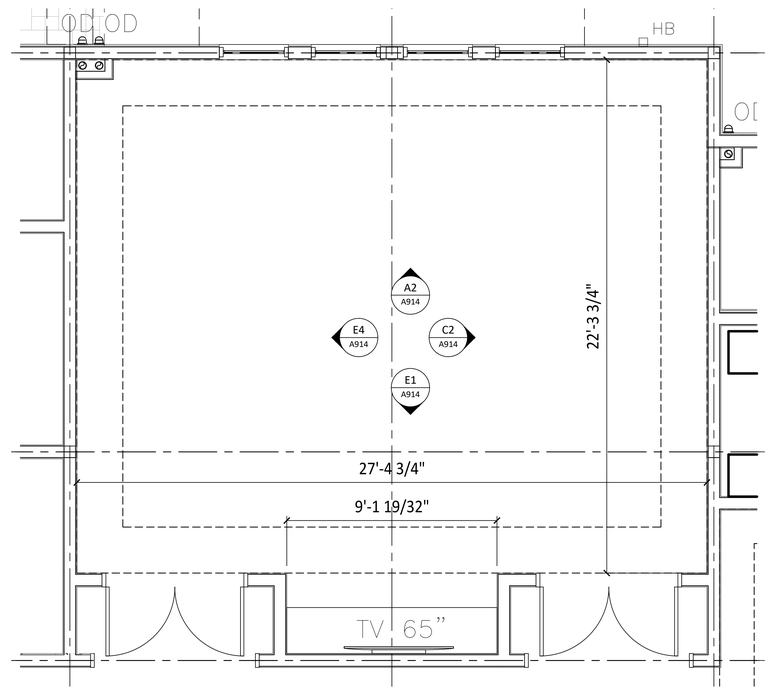

A5	FLOOR PLAN: LEVEL 100 - MEETING RM
A914	3/8" = 1'-0"

KUO DIEDRICH CHI

730 PEACHTREE STREET, NE
STUDIO 325
ATLANTA, GEORGIA 30308
678.244.6270

www.KDCarchitects.com

ARCHITECT:

ARCH. REG: AR91344

CONSULTANT:

REVISIONS

DATE:	DESCRIPTION:
10/18/24	SCHEMATIC DESIGN
6/5/25	DESIGN DEVELOPMENT
10/23/25	50% CONSTRUCTION DOCS
11/14/25	PERMIT SET

PROJECT:

SERENITY SEASIDE RESORT

BUILDING #1

THE INN

186 SOUTH BAY SHORE DRIVE, EASTPOINT, FL 32328

Serenity Seaside Operations, LLC
174 Watercolor Way, PMB 410
Santa Rosa Beach, Florida 32459

JOB NUMBER: 23019.1

DATE: --/--/----

TITLE: INTERIOR ELEV @ MEETING RM

SHEET: A914

K:\Projects\23\23019\DWGs\Serenity_Bldg-1_Inn\Sheets\23019.1-A914.dwg Plotted: Nov 13, 2025 - 6:36pm by ColebLawrence

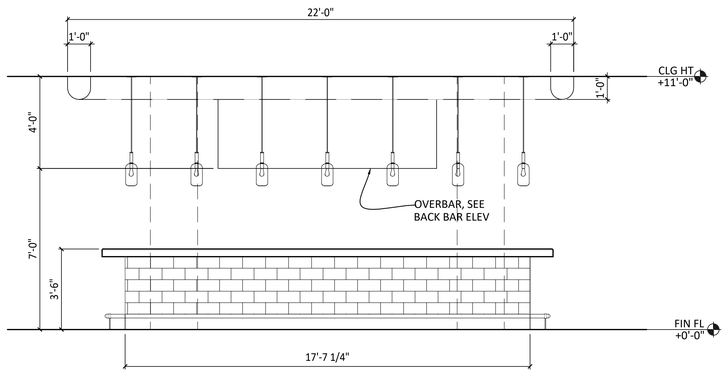

E1 INT ELEV @ BAR FRONT - WEST

A915 | 3/8" = 1'-0"

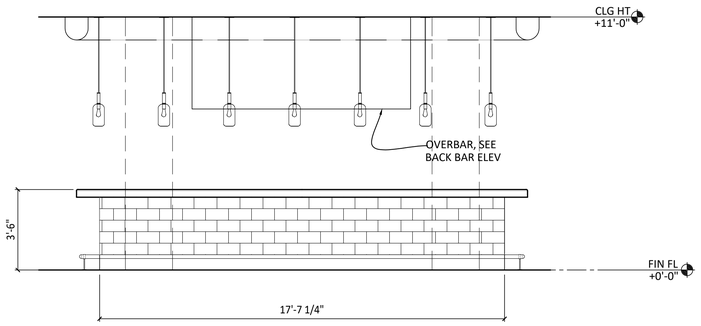

D1 INT ELEV @ BAR FRONT - EAST

A915 | 3/8" = 1'-0"

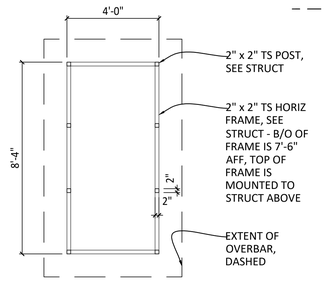

D4 PLAN @ STEEL FRAME (OVERBAR

A915 | 3/8" = 1'-0"

SHEET NOTES / LEGEND

1. -

GENERAL NOTES

A. -

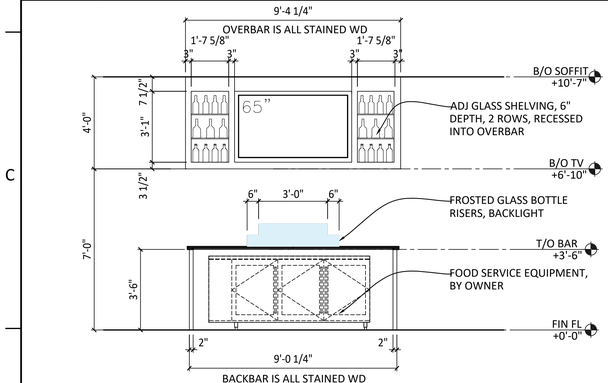

B1 INT ELEV @ BACK BAR - EAST

A915 | 3/8" = 1'-0"

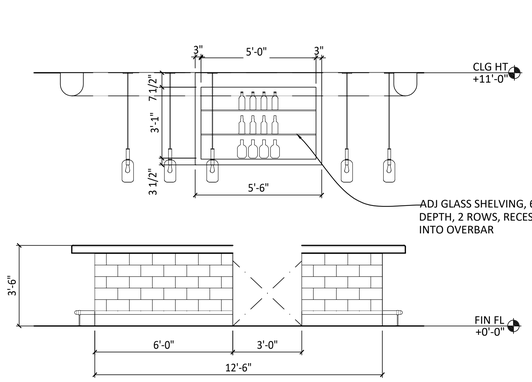

B3 INT ELEV @ BAR FRONT - NORTH

A915 | 3/8" = 1'-0"

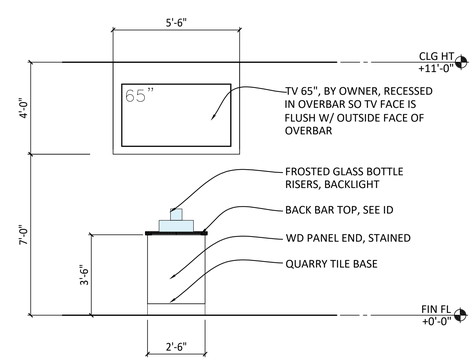

A1 INT ELEV @ BACK BAR - SOUTH

A915 | 3/8" = 1'-0"

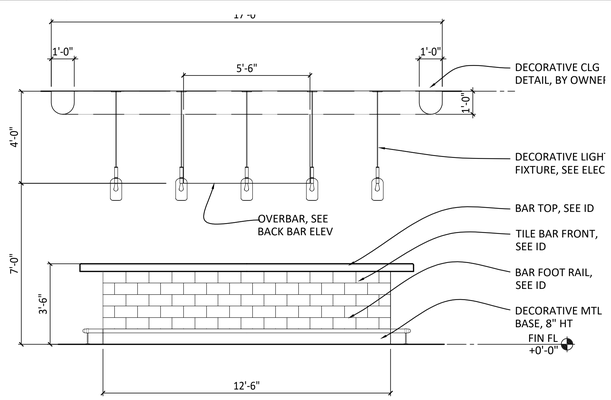

A3 INT ELEV @ BAR FRONT - SOUTH

A915 | 3/8" = 1'-0"

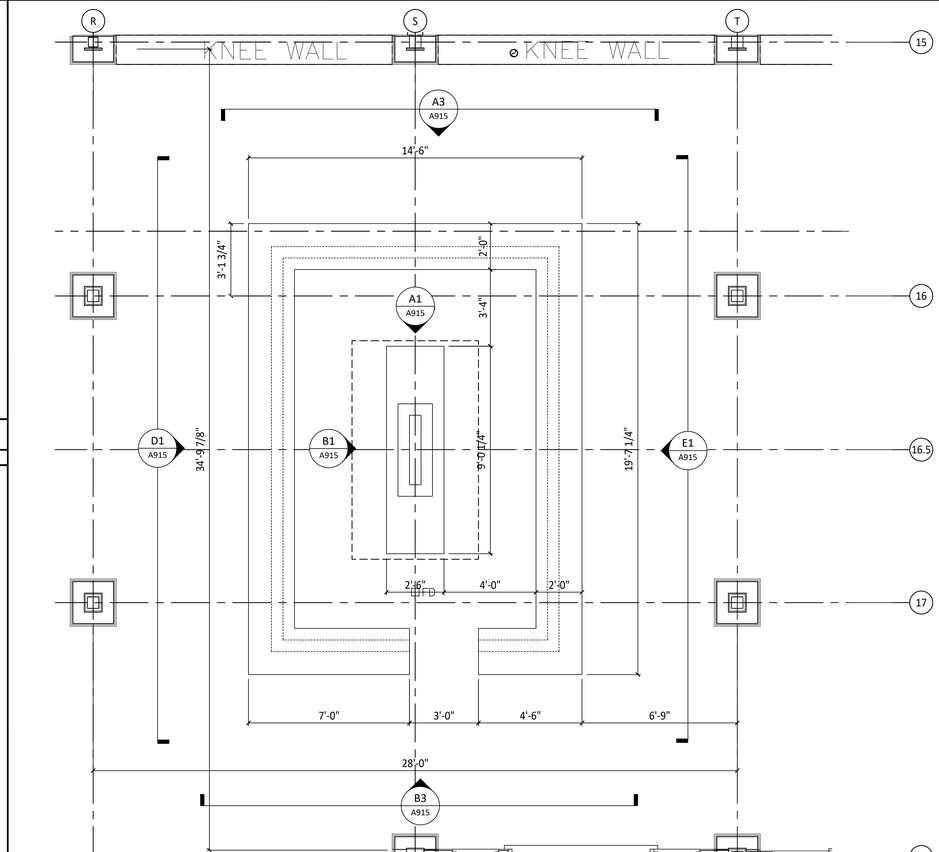

A5 FLOOR PLAN: LEVEL 100 - BAR

A915 | 3/8" = 1'-0"

PROJECT NORTH

KUO DIEDRICH CHI

730 PEACHTREE STREET, NE
STUDIO 325
ATLANTA, GEORGIA 30308
678.244.6270

www.KDCarchitects.com

ARCHITECT:

ARCH. REG: AR91344

CONSULTANT:

REVISIONS

DATE:	DESCRIPTION:
10/18/24	SCHEMATIC DESIGN
6/5/25	DESIGN DEVELOPMENT
10/23/25	50% CONSTRUCTION DOCS
11/14/25	PERMIT SET

PROJECT:

SERENITY SEASIDE RESORT

BUILDING #1

THE INN

186 SOUTH BAY SHORE DRIVE, EASTPOINT, FL 32328

Serenity Seaside Operations, LLC
174 Watercolor Way, PMB 410
Santa Rosa Beach, Florida 32459

JOB NUMBER: 23019.1

DATE: --/--/----

TITLE: INTERIOR ELEV @ BAR

SHEET: A915

K:\Projects\23\23019\DWGs\Serenity_Bldg-1_Inn\Sheets\23019.1-A915.dwg Plotted: Nov 13, 2025 - 6:37pm by CalebLawrence

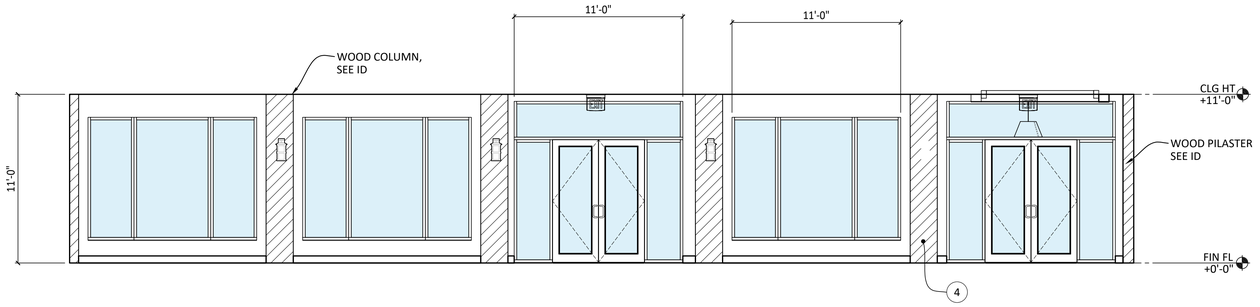

E2 | INT ELEV @ RESTAURANT - SOUTH

A916 | 1/4" = 1'-0"

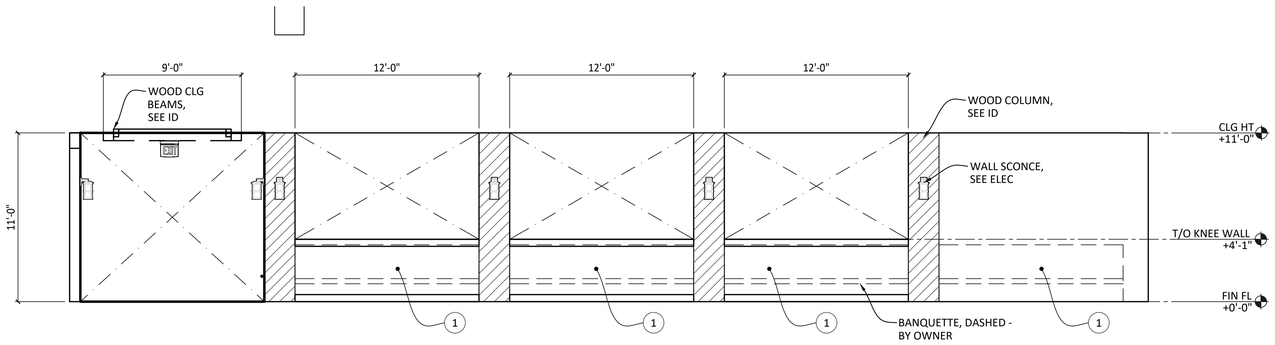

D2 | INT ELEV @ RESTAURANT - NORTH

A916 | 1/4" = 1'-0"

SHEET NOTES / LEGEND

1. BANQUETTE BY OWNER, D6/A1021
2. MILLWORK & SHELVING DISPLAY BY OWNER
3. WOOD COLUMNS, BY OWNER
4. WOOD PILASTER, BY OWNER

GENERAL NOTES

A. -

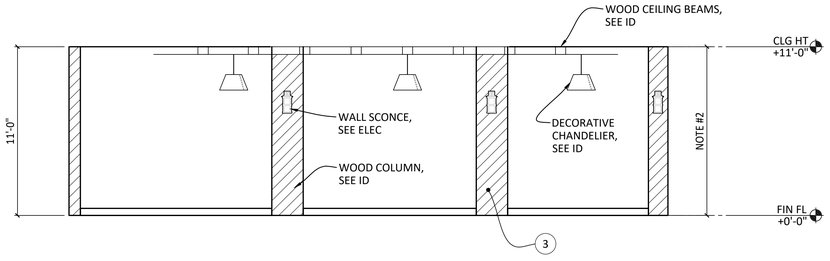

B1 | INT ELEV @ RESTAURANT - WEST

A916 | 1/4" = 1'-0"

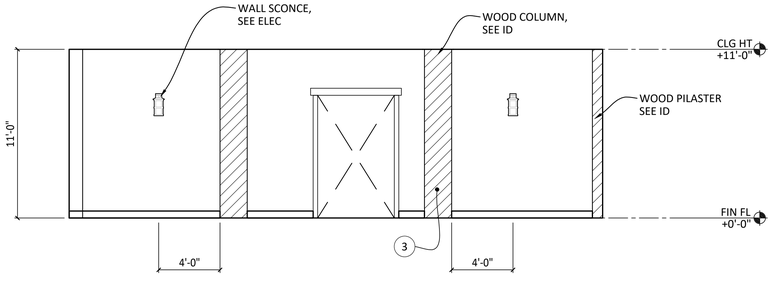

A1 | INT ELEV @ RESTAURANT - EAST

A916 | 1/4" = 1'-0"

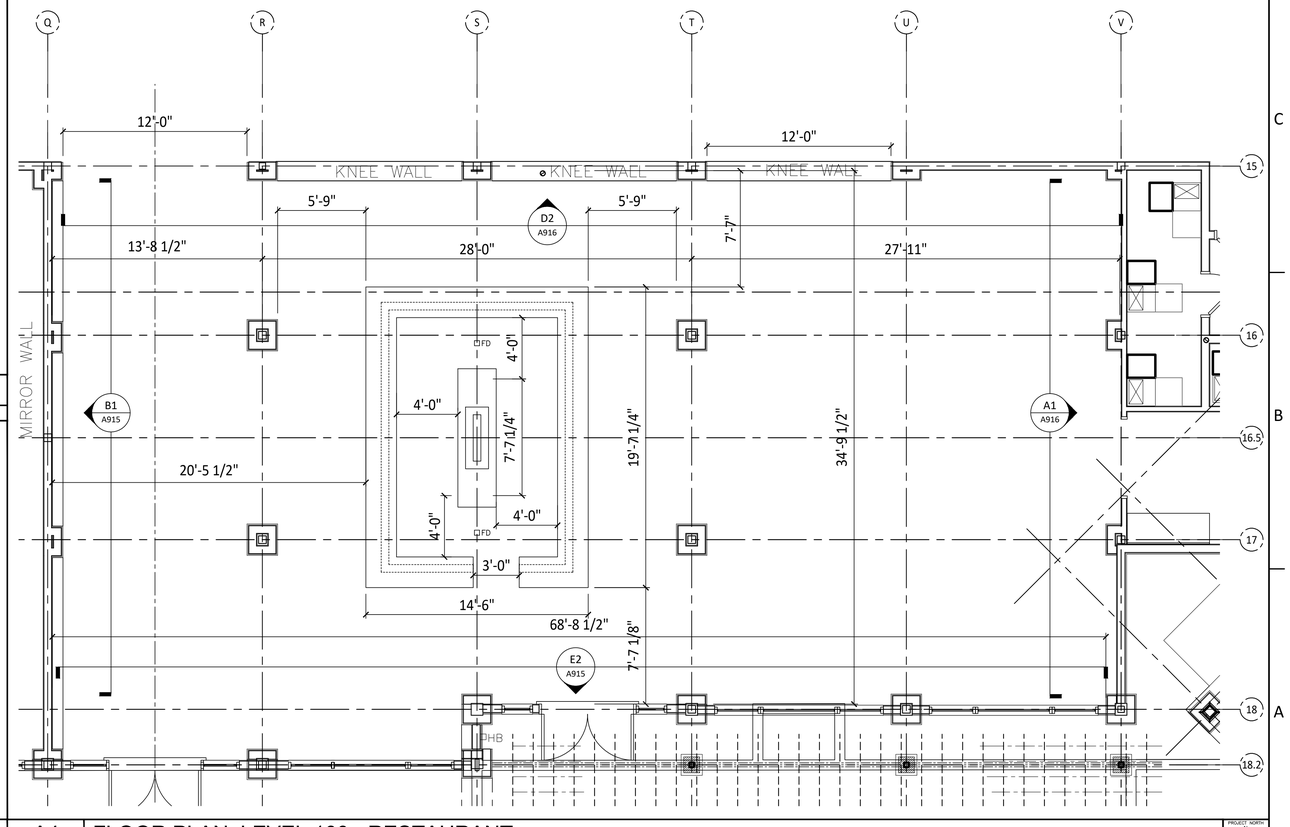

A4 | FLOOR PLAN: LEVEL 100 - RESTAURANT

A916 | 1/4" = 1'-0"

PROJECT NORTH

KUO DIEDRICH CHI

730 PEACHTREE STREET, NE
STUDIO 325
ATLANTA, GEORGIA 30308
678.244.6270

www.KDCarchitects.com

ARCHITECT:

ARCH. REG: AR91344

CONSULTANT:

REVISIONS

DATE:	DESCRIPTION:
10/18/24	SCHEMATIC DESIGN
6/5/25	DESIGN DEVELOPMENT
10/23/25	50% CONSTRUCTION DOCS
11/14/25	PERMIT SET

PROJECT:

SERENITY SEASIDE RESORT

BUILDING #1

THE INN

186 SOUTH BAY SHORE DRIVE, EASTPOINT, FL 32328

Serenity Seaside Operations, LLC
174 Watercolor Way, PMB 410
Santa Rosa Beach, Florida 32459

JOB NUMBER: 23019.1

DATE: --/--/----

TITLE: INTERIOR ELEV @ RESTAURANT

SHEET: A916

K:\Projects\23\23019\DWGs\Serenity_Bldg-1_Inn\Sheets\23019.1-A916.dwg Plotted: Nov 13, 2025 - 6:38pm by ColebLawrence

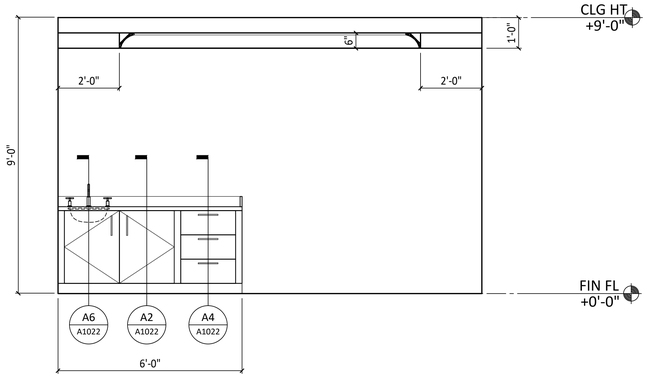

E1	NORTH @ TREATMENT ROOM 113b
A917	1/2" = 1'-0"

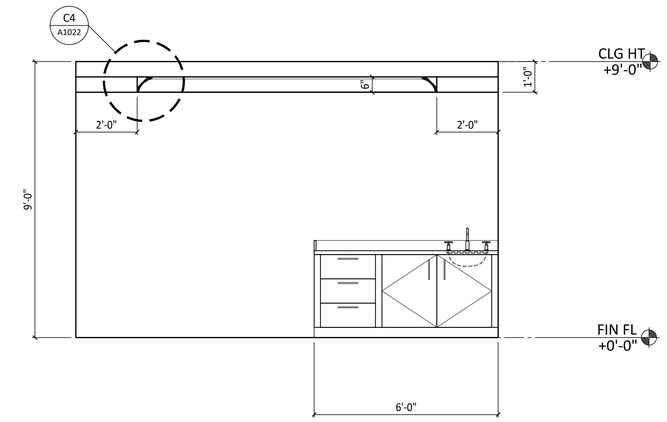

E4	SOUTH @ TREATMENT ROOM 113a
A917	1/2" = 1'-0"

SHEET NOTES / LEGEND

1. -

GENERAL NOTES

A. FINISH SCHEDULE (BY ID) ON SHEET A1111

B. FINISH SELECTIONS (BY ID) ON SHEET A1112

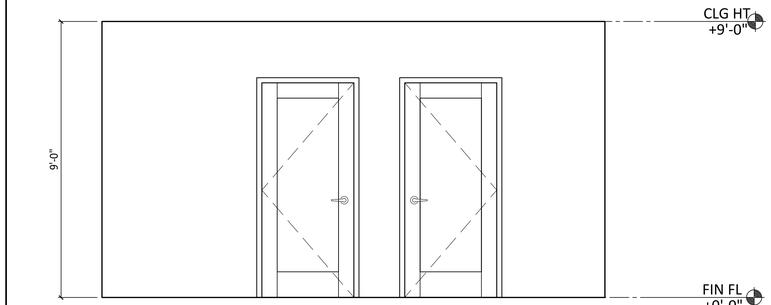

C2	WEST @ SPA LOBBY 113
A917	1/2" = 1'-0"

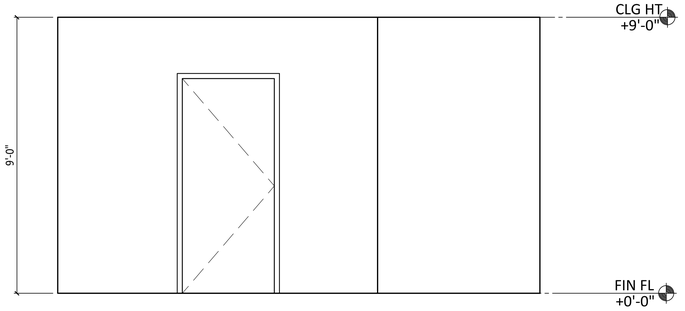

A2	EAST @ SPA LOBBY 113
A917	1/2" = 1'-0"

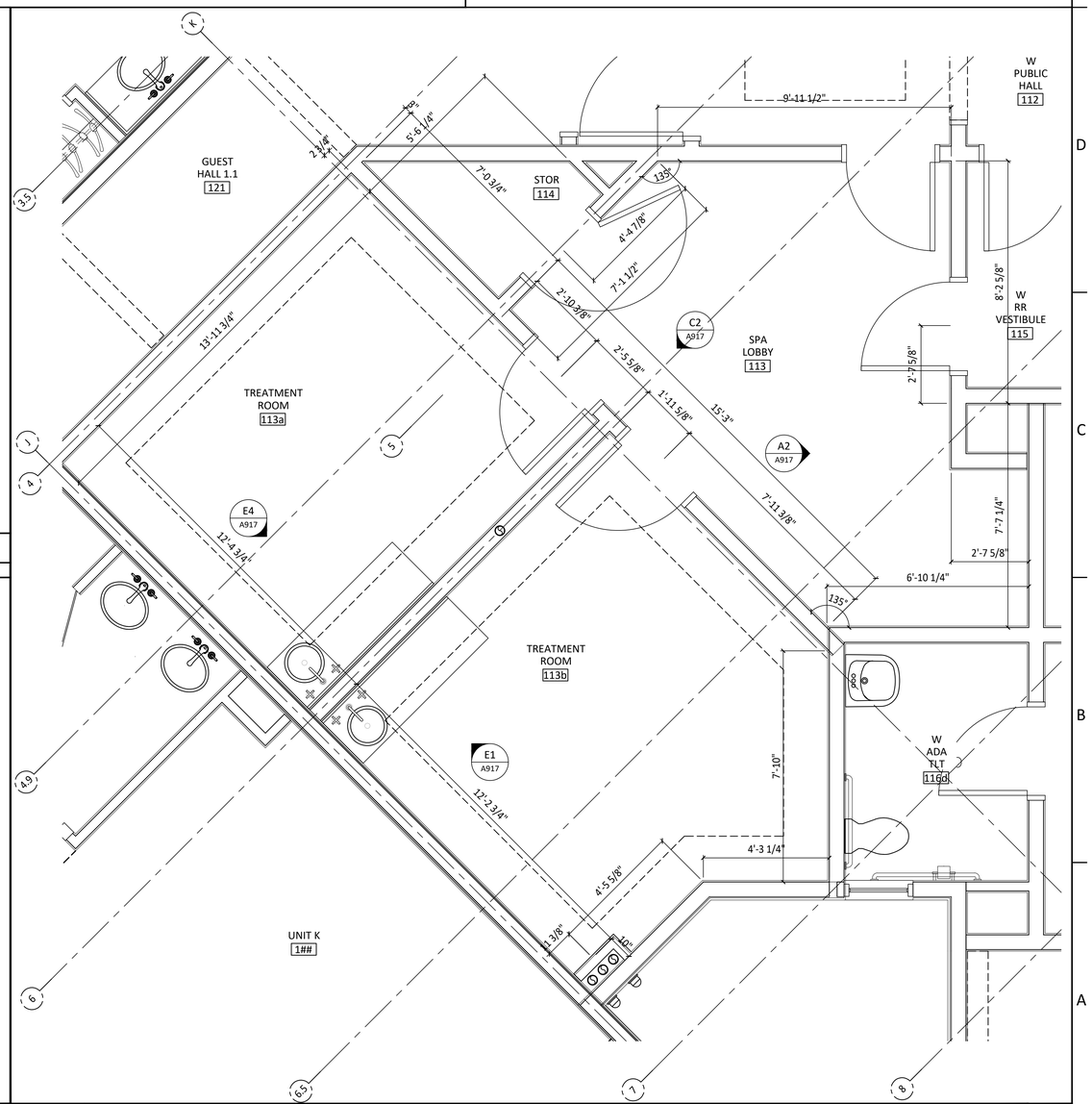

A5	FLOOR PLAN: LEVEL 100 - SPA
A917	1/2" = 1'-0"

KUO DIEDRICH CHI

730 PEACHTREE STREET, NE
STUDIO 325
ATLANTA, GEORGIA 30308
678.244.6270

www.KDCarchitects.com

ARCHITECT:

ARCH. REG: AR91344

CONSULTANT:

REVISIONS

DATE:	DESCRIPTION:
10/18/24	SCHEMATIC DESIGN
6/5/25	DESIGN DEVELOPMENT
10/23/25	50% CONSTRUCTION DOCS
11/14/25	PERMIT SET

PROJECT:

SERENITY SEASIDE RESORT

BUILDING #1

THE INN

186 SOUTH BAY SHORE DRIVE, EASTPOINT, FL 32328

Serenity Seaside Operations, LLC
174 Watercolor Way, PMB 410
Santa Rosa Beach, Florida 32459

JOB NUMBER: 23019.1

DATE: --/--/----

TITLE: INTERIOR ELEV @ SPA

SHEET: A917

K:\Projects\23\23019\DWGs\Serenity_Bldg-1_Inn\Sheets\23019.1-A917.dwg Plotted: Nov 13, 2025 - 6:38pm by ColebLawrence

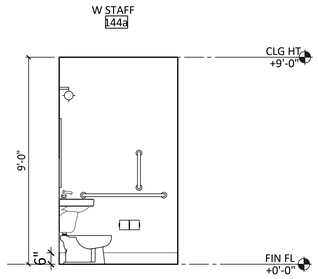

E2	EAST @ W STAFF RR 144a
A918	3/8" = 1'-0"

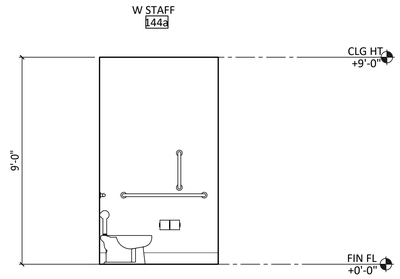

E4	WEST @ W STAFF RR 114a
A918	3/8" = 1'-0"

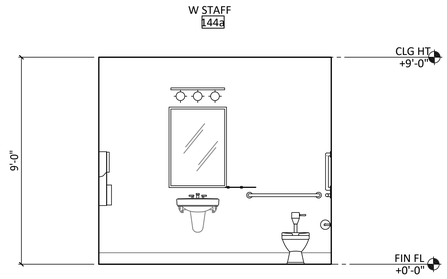

E5	SOUTH @ W STAFF RR 144a
A918	3/8" = 1'-0"

SHEET NOTES / LEGEND

1. -

GENERAL NOTES

A. -

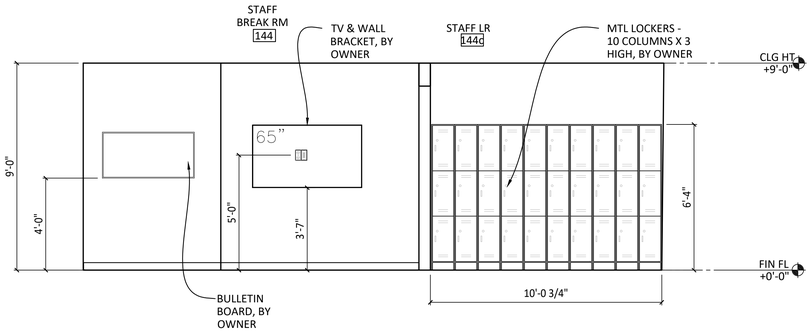

C2	SOUTH @ STAFF LOCKERS 144c
A918	3/8" = 1'-0"

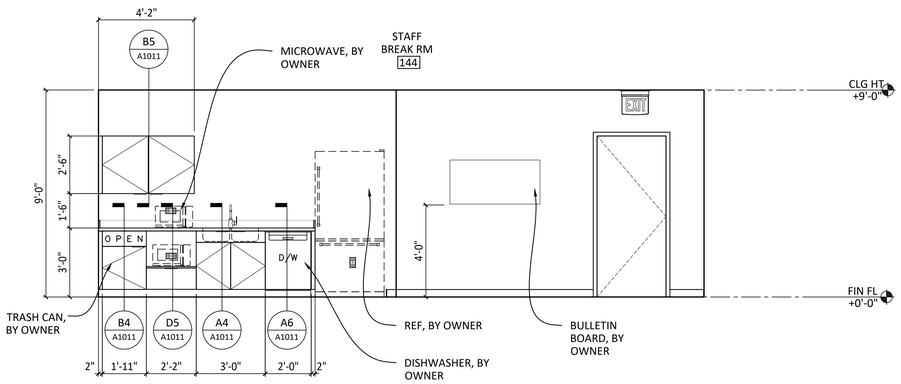

A2	EAST @ STAFF BREAK ROOM 144
A918	3/8" = 1'-0"

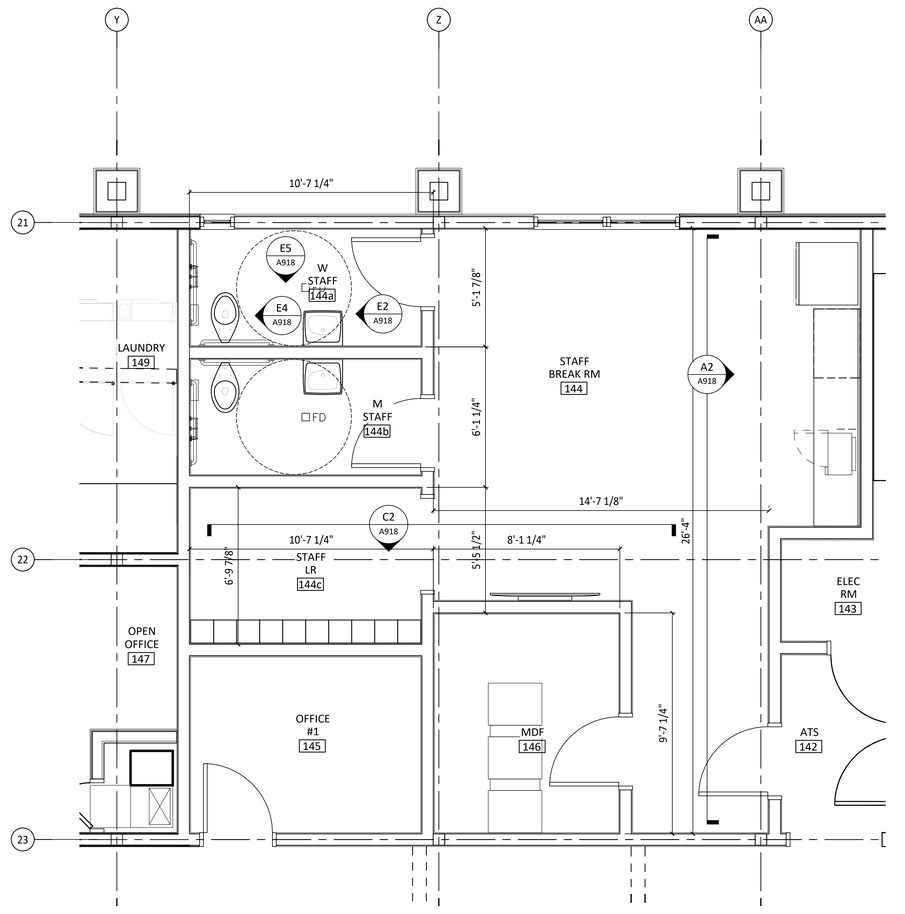

A5	FLOOR PLAN: LEVEL 100 - STAFF BREAK ROOM
A918	3/8" = 1'-0"

KUO DIEDRICH CHI
730 PEACHTREE STREET, NE
STUDIO 325
ATLANTA, GEORGIA 30308
678.244.6270
www.KDCarchitects.com

ARCHITECT:

ARCH. REG: AR91344

CONSULTANT:

REVISIONS	
DATE:	DESCRIPTION:
10/18/24	SCHEMATIC DESIGN
6/5/25	DESIGN DEVELOPMENT
10/23/25	50% CONSTRUCTION DOCS
11/14/25	PERMIT SET

PROJECT:

SERENITY SEASIDE RESORT

BUILDING #1

THE INN

186 SOUTH BAY SHORE DRIVE, EASTPOINT, FL 32328

Serenity Seaside Operations, LLC
174 Watercolor Way, PMB 410
Santa Rosa Beach, Florida 32459

JOB NUMBER: 23019.1

DATE: --/--/----

TITLE: INTERIOR ELEV @ BREAK RM

SHEET: A918

K:\Projects\23\23019\DWGs\Serenity_Bldg-1_Inn\Sheets\23019.1-A918.dwg Plotted: Nov 13, 2025 – 6:39pm by CalebLawrence

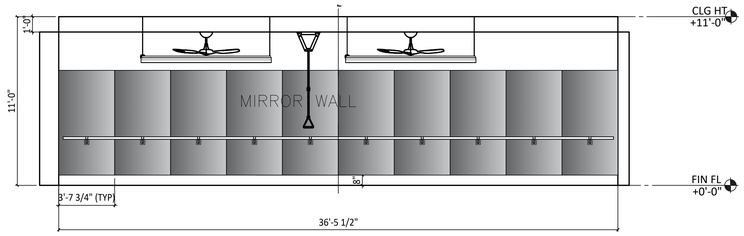

E1 | INT ELEV "EAST" @ FITNESS #111

A919 | 1/2" = 1'-0"

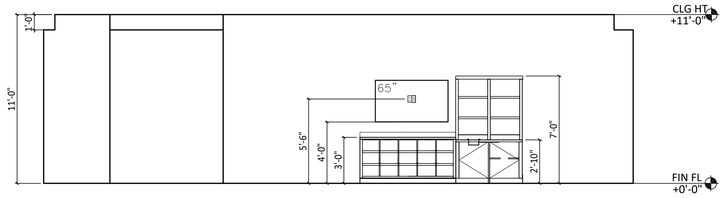

E4 | INT ELEV "WEST" @ FITNESS #111

A919 | 1/2" = 1'-0"

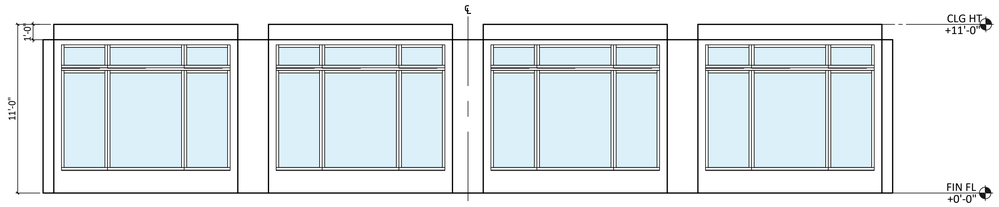

C1 | INT ELEV "SOUTH" @ FITNESS #111

A919 | 1/2" = 1'-0"

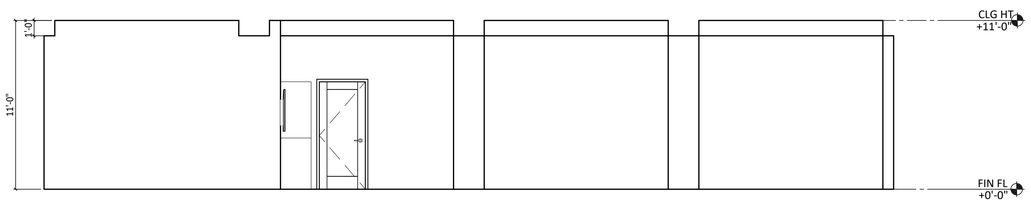

A1 | INT ELEV "NORTH" @ FITNESS #111

A919 | 1/2" = 1'-0"

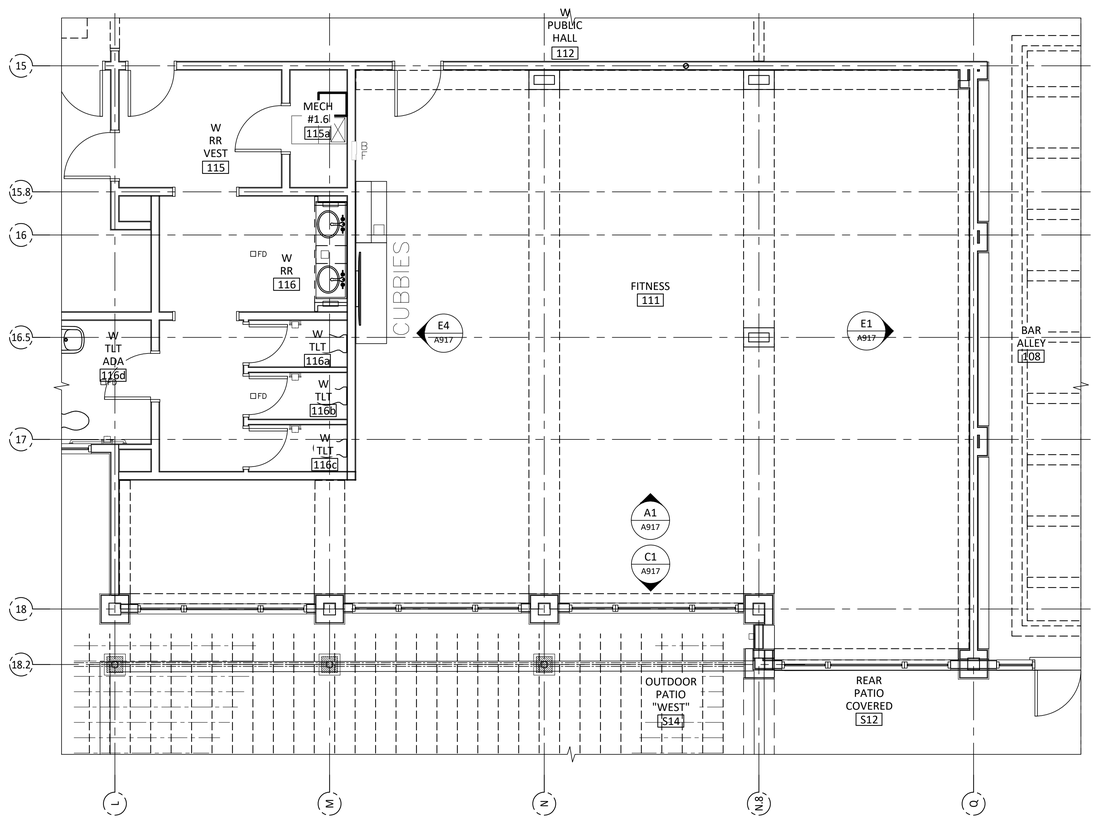

A5 | FLOOR PLAN: LEVEL 100 - FITNESS

A919 | 1/4" = 1'-0"

SHEET NOTES / LEGEND

1. -

GENERAL NOTES

A. FINISH SCHEDULE (BY ID) ON SHEET A1111

B. FINISH SELECTIONS (BY ID) ON SHEET A1112

KUO DIEDRICH CHI

730 PEACHTREE STREET, NE
STUDIO 325
ATLANTA, GEORGIA 30308
678.244.6270

www.KDCarchitects.com

ARCHITECT:

ARCH. REG: AR91344

CONSULTANT:

REVISIONS

DATE:	DESCRIPTION:
10/18/24	SCHEMATIC DESIGN
6/5/25	DESIGN DEVELOPMENT
10/23/25	50% CONSTRUCTION DOCS
11/14/25	PERMIT SET

PROJECT:

SERENITY SEASIDE RESORT

BUILDING #1

THE INN

186 SOUTH BAY SHORE DRIVE, EASTPOINT, FL 32328

Serenity Seaside Operations, LLC
174 Watercolor Way, PMB 410
Santa Rosa Beach, Florida 32459

JOB NUMBER: 23019.1

DATE: --/--/----

TITLE: INTERIOR ELEV @ FITNESS

SHEET: A919

K:\Projects\23\23019\DWGs\Serenity_Bldg-1_Inn\Sheets\23019.1-A919.dwg Plotted: Nov 13, 2025 - 6:39pm by ColebLawrence

SHEET NOTES / LEGEND

1. -

GENERAL NOTES

A. FINISH SCHEDULE (BY ID) ON SHEET A1111

B. FINISH SELECTIONS (BY ID) ON SHEET A1112

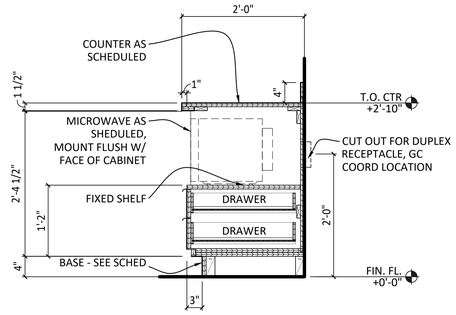

D5 BASE CABINET - MICROWAVE

A1011 1" = 1'-0"

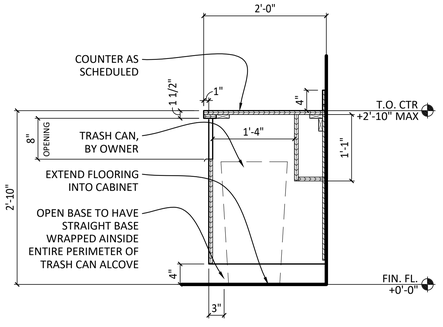

B4 BASE CABINET @ TRASH DRAWER

A1011 1" = 1'-0"

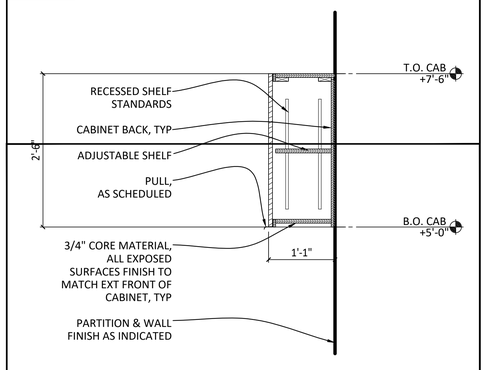

C5 SECTION @ P. LAM WALL CABINET

A1011 1" = 1'-0"

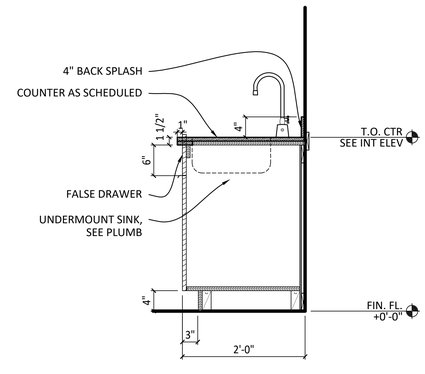

A4 BASE CABINET - SINK

A1011 1" = 1'-0"

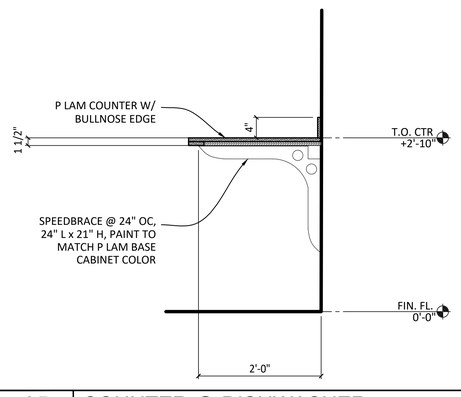

A5 COUNTER @ DISHWASHER

A1011 1" = 1'-0"

GENERAL CABINETRY NOTES:

A. ALL CABINETRY SHALL CONFORM TO AWI STANDARDS FOR CUSTOM GRADES.

B. ALL CABINETRY SHALL BE CONSTRUCTED WITH ¾" MEDIUM DENSITY BOARD, UNO USE WATER RESISTANT MDF AT COUNTERS W/ SINKS

C. UNDERSIDE WALL CABINETS SHALL MATCH CABINET FRONTS.

D. CABINET HARDWARE SHALL BE ACCURIDE OR EQUAL HEAVY DUTY, FULL EXTENSION DRAWER SLIDES, BLUM OR EQUAL CONCEALED, 120 DEGREE OPENING HINGES, KV OR EQUAL RECESSED STEEL STANDARDS.

E. DRAWER CONSTRUCTION SHALL BE 3/4" SEPARATE FRONT ON 1/2" BOX WITH 1/4" BOTTOM SET INTO 4 SIDES.

F. AT PLASTIC LAMINATE MILLWORK - ALL EXPOSED SURFACES SHALL BE CLAD IN SPECIFIED HIGH-PRESSURE LAMINATE, UNO ALL INTERIOR SURFACES SHALL BE CLAD WITH WHITE MELAMINE, UNO.

F. AT WOOD MILLWORK - ALL EXPOSED SURFACES SHALL BE CLAD IN WOOD, UNO ALL INTERIOR SURFACES SHALL BE CLAD WITH BLACK MELAMINE, UNO.

G. PROVIDE BLOCKING AS REQUIRED. INSTALL IN ACCORDANCE WITH AWI CUSTOM GRADE STANDARDS.

H. SEE FINISH SCHEDULES & INTERIOR ELEVATIONS FOR ADDITIONAL INFORMATION.

I. SEE ID FOR ALL CABINET, COUNTER TOP AND CABINET HARDWARE FINISH SELECTIONS.

J. SUSPENDED WALL CABINET WIDTH TO ALIGN WITH CORRESPONDING BASE WIDTH UNLESS DESIGNATED OTHERWISE.

K. CABINET WIDTH TO BE BASED ON MODULE INCREMENTS OF 3" THROUGH 24" WIDE CABINETS AND 6" INCREMENTS FOR 24" WIDE THROUGH 48" WIDE CABINETS.

L. 3" MAX. WIDTH FILLER PANELS WILL BE PROVIDED TO FINISH OUT CABINETS TO WALLS WHERE PLAN DIMENSIONS DICTATE

M. PROVIDE FINISHED END PANELS AND/OR END RETURNS AT OPEN ENDED CABINETS.

N. PROVIDE WALL BRACKET SUPPORTS AT 36" O.C. MAX. FOR CONTINUOUS KNEE SPACE.

O. ALL CASEWORK SHELVES TO BE ADJUSTABLE U.N.O. SHELVES TO BE 3/4" THICK FOR SPANS UP TO 42"

P. CASEWORK MANUFACTURER TO PROVIDE TRIM AND FILLER PANELS WHERE EQUIPMENT IS LOCATED WITHIN CASEWORK UNITS.

Q. FULL HEIGHT CABINETS TO BE PROVIDED WITH FILLER AT TOP TO FLUSH WITH ADJACENT SUSPENDED WALL CABINETS OR CLOSE OFF TOP OF CABINET WHERE FURRED DOWN.

R. PROVIDE ENDSPALSH WHEN COUNTERTOP IS ADJACENT TO WALLS AT SIDES.

S. REFER TO SPECIFICATIONS FOR ADDITIONIAL CABINETRY CONSTRUCTION REQUIREMENTS.

T. ALL BLANK FRONTS UNDER SINKS TO BE REMOVABLE FOR PLUMBING MAINTENANCE ONLY.

U. ALL EXPOSED HOT WATER PIPING IN TOILET ROOMS TO BE INSULATED AND ADA COMPLIANT.

A7 CABINETRY NOTES

A1011 NTS

KUO DIEDRICH CHI

730 PEACHTREE STREET, NE
STUDIO 325
ATLANTA, GEORGIA 30308
678.244.6270

www.KDCarchitects.com

ARCHITECT:

ARCH. REG: AR91344

CONSULTANT:

REVISIONS

DATE:	DESCRIPTION:
10/18/24	SCHEMATIC DESIGN
6/5/25	DESIGN DEVELOPMENT
10/23/25	50% CONSTRUCTION DOCS
11/14/25	PERMIT SET

PROJECT:

SERENITY SEASIDE RESORT

BUILDING #1

THE INN

186 SOUTH BAY SHORE DRIVE, EASTPOINT, FL 32328

Serenity Seaside Operations, LLC
174 Watercolor Way, PMB 410
Santa Rosa Beach, Florida 32459

JOB NUMBER: 23019.1

DATE: --/--/----

TITLE: INTERIOR MILLWORK DETAILS @ P. LAM

SHEET: A1011

K:\Projects\23\23019\DWGs\Serenity_Bldg-1_inn\Sheets\23019.1-A1011.dwg Plotted: Nov 13, 2025 - 6:39pm by ColeLawrence

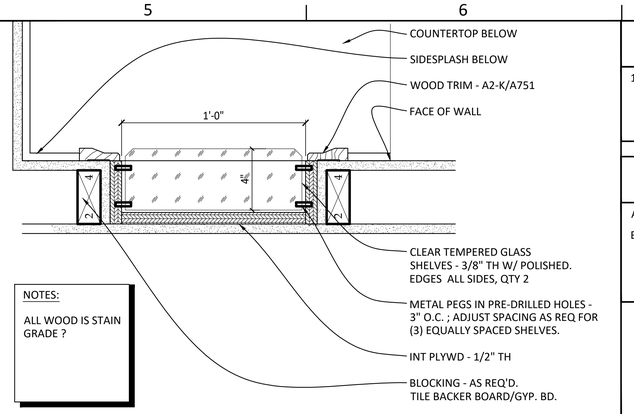

E5 | PLAN DETAIL @ HAND TOWEL RECESS

A1021 | 3" = 1'-0"

SHEET NOTES / LEGEND

1. PROVIDE VWC ON BULKHEAD & BOTTOM OF SOFFIT IN RR

GENERAL NOTES

A. FINISH SCHEDULE (BY ID) ON SHEET A1111

B. FINISH SELECTIONS (BY ID) ON SHEET A1112

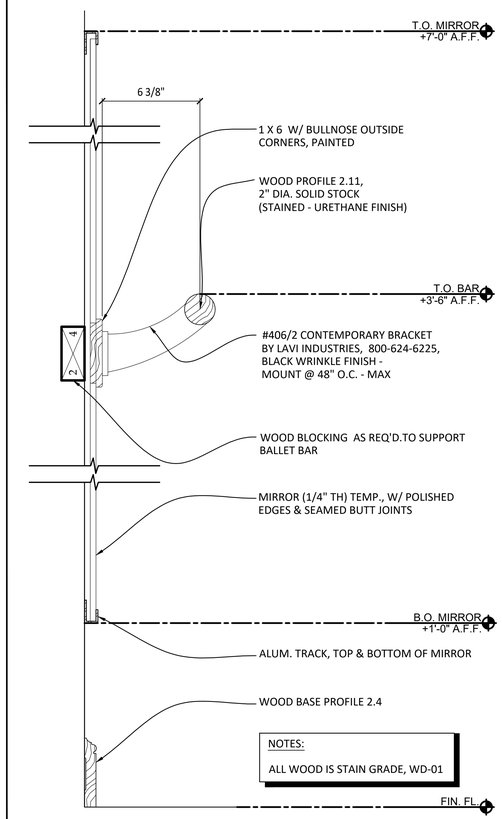

C3 | SECTION @ WALL MIRROR

A1021 | 3" = 1'-0"

NOTE:
BANQUETTES ARE BY OWNER

REFERENCE DIMENSIONS BELOW FOR LAYOUT

GC TO VERIFY & CONFIRM FINAL BANQUETTE DESIGN & DIMENSIONS W/ OWNER.

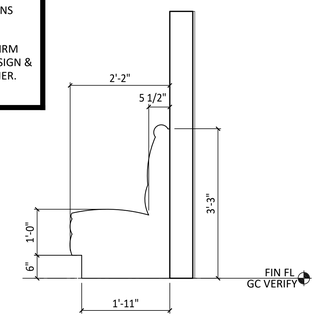

D6 | BANQUETTE PROFILE

A1021 | 3" = 1'-0"

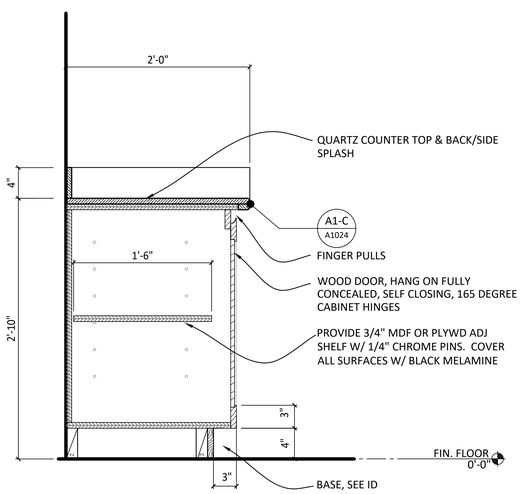

A2 | SECTION @ BASE CABINET

A1021 | 1-1/2" = 1'-0"

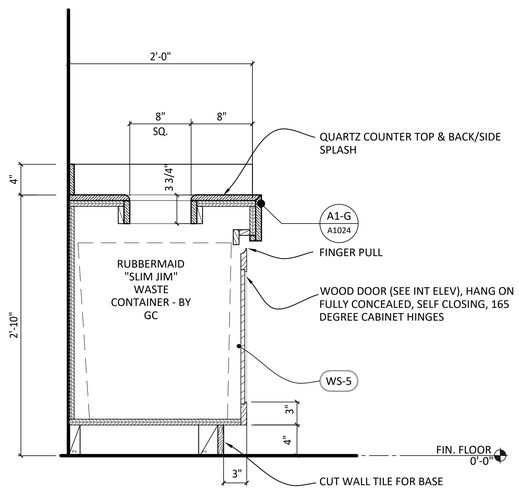

A4 | SECTION @ COUNTER / TRASH DROP (RESTROOM)

A1021 | 1-1/2" = 1'-0"

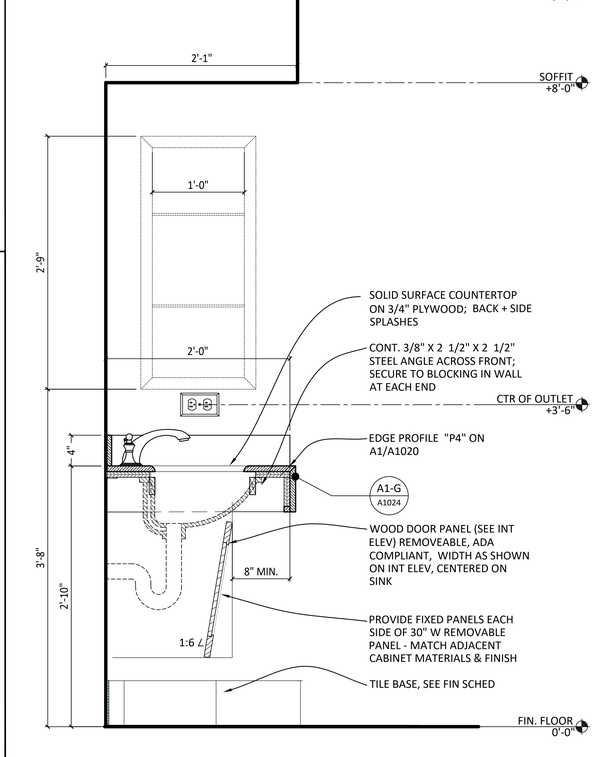

A6 | SECTION @ COUNTER / LAV (RESTROOM)

A1021 | 1-1/2" = 1'-0"

KUO DIEDRICH CHI
730 PEACHTREE STREET, NE
STUDIO 325
ATLANTA, GEORGIA 30308
678.244.6270
www.KDCarchitects.com

ARCHITECT:

ARCH. REG: AR91344

CONSULTANT:

REVISIONS

DATE:	DESCRIPTION:
10/18/24	SCHEMATIC DESIGN
6/5/25	DESIGN DEVELOPMENT
10/23/25	50% CONSTRUCTION DOCS
11/14/25	PERMIT SET

PROJECT:

SERENITY SEASIDE RESORT

BUILDING #1

THE INN

186 SOUTH BAY SHORE DRIVE, EASTPOINT, FL 32328

Serenity Seaside Operations, LLC
174 Watercolor Way, PMB 410
Santa Rosa Beach, Florida 32459

JOB NUMBER: 23019.1

DATE: --/--/----

TITLE: INTERIOR DETAILS

SHEET: A1021

K:\Projects\23\23019\DWGs\Serenity_Bldg-1_Inn\Sheets\23019.1-A1021.dwg Plotted: Nov 13, 2025 - 6:39pm by CoteLawrence

SHEET NOTES / LEGEND

1. --

GENERAL NOTES

A. FINISH SCHEDULE (BY ID) ON SHEET A1111

B. FINISH SELECTIONS (BY ID) ON SHEET A1112

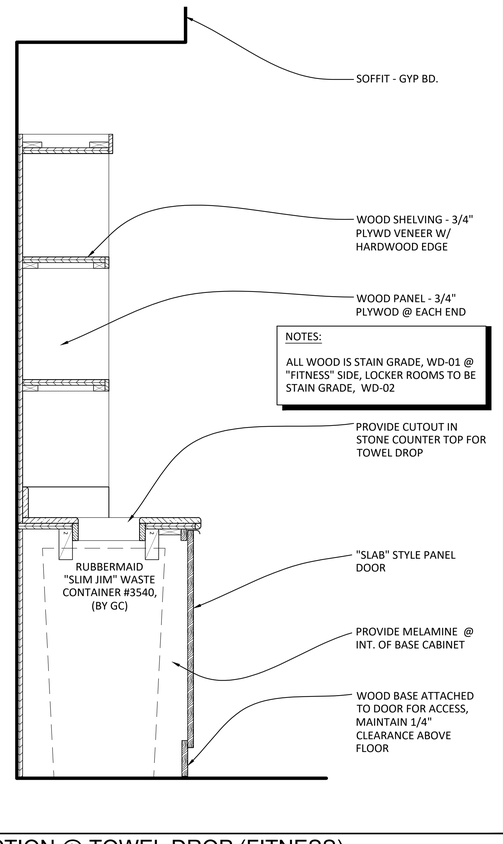

C2 | SECTION @ TOWEL DROP (FITNESS)

A1022 | 1-1/2" = 1'-0"

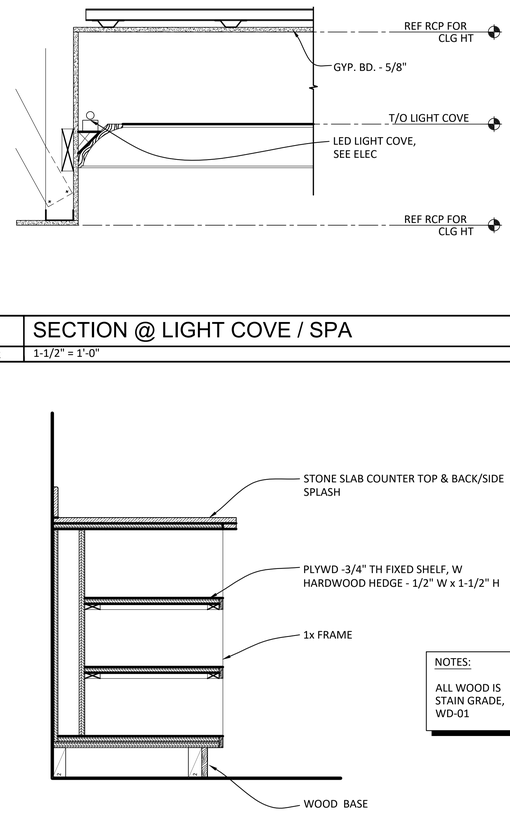

C4 | SECTION@ CUBBIES/ 34" COUNTER (FITNESS)

A1022 | 1-1/2" = 1'-0"

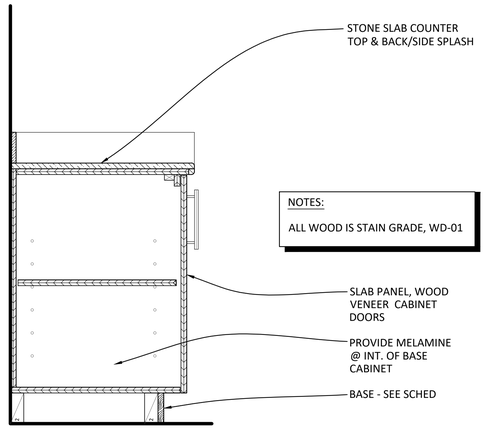

A2 | SECTION @ COUNTER - TREATMENT RM (BLDG #2)

A1022 | 1-1/2" = 1'-0"

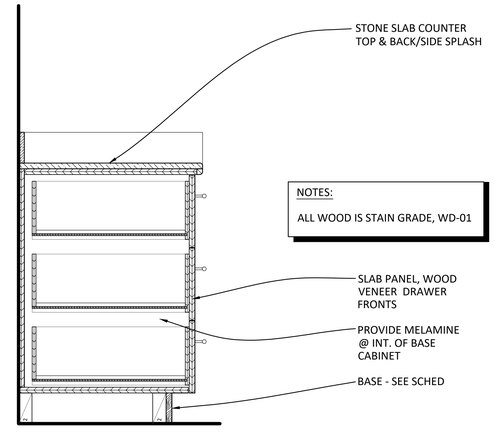

A4 | SECTION @ COUNTER - TREATMENT RM

A1022 | 1-1/2" = 1'-0"

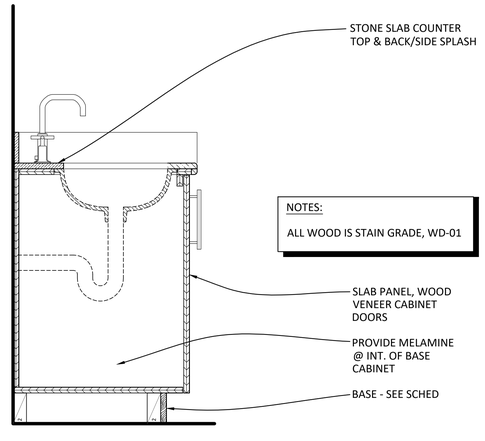

A6 | SECT @ LAV COUNTER TREATMENT RM

A1022 | 1-1/2" = 1'-0"

KUO DIEDRICH CHI

730 PEACHTREE STREET, NE
STUDIO 325
ATLANTA, GEORGIA 30308
678.244.6270

www.KDCarchitects.com

ARCHITECT:

ARCH. REG: AR91344

CONSULTANT:

REVISIONS	
DATE:	DESCRIPTION:
10/18/24	SCHEMATIC DESIGN
6/5/25	DESIGN DEVELOPMENT
10/23/25	50% CONSTRUCTION DOCS
11/14/25	PERMIT SET

PROJECT:

SERENITY SEASIDE RESORT

BUILDING #1

THE INN

186 SOUTH BAY SHORE DRIVE, EASTPOINT, FL 32328

Serenity Seaside Operations, LLC
174 Watercolor Way, PMB 410
Santa Rosa Beach, Florida 32459

JOB NUMBER: 23019.1

DATE: --/--/----

TITLE:

INTERIOR DETAILS AT CHECK-IN

SHEET:

A1022

K:\Projects\23\23019\DWGs\Serenity_Bldg-1_Inn\Sheets\23019.1-A1022.dwg Plotted: Nov 13, 2025 - 6:40pm by ColebLawrence

SHEET NOTES / LEGEND

1. FINGER PULL CABINETS - SEE DETAIL --/A10--
2. BAR FOOT RAIL - TYPE "A" IS RADIUSED, W/ FINIAL AT EACH END, & FLOOR MOUNTED POSTS

GENERAL NOTES

A. FINISH SCHEDULE (BY ID) ON SHEET A1111

B. FINISH SELECTIONS (BY ID) ON SHEET A1112

NOTES:

ALL OF THESE DETAILS TO BE PROVIDED BY MILLWORK SUBCONTRACTOR

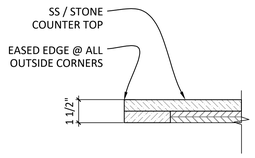

A SECTION

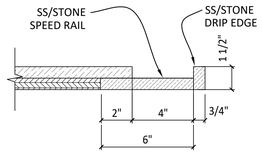

B SECTION

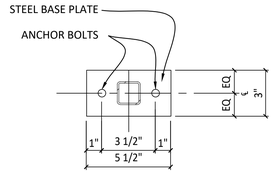

C PLAN DETAIL

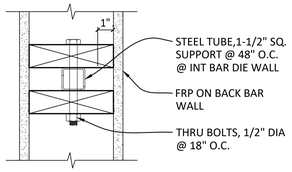

D PLAN DETAIL

D1	BAR DETAILS - MISC
A1031	3" = 1'-0"

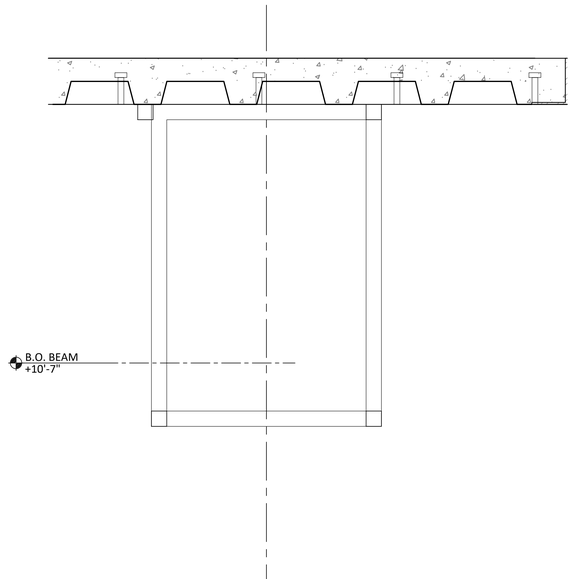

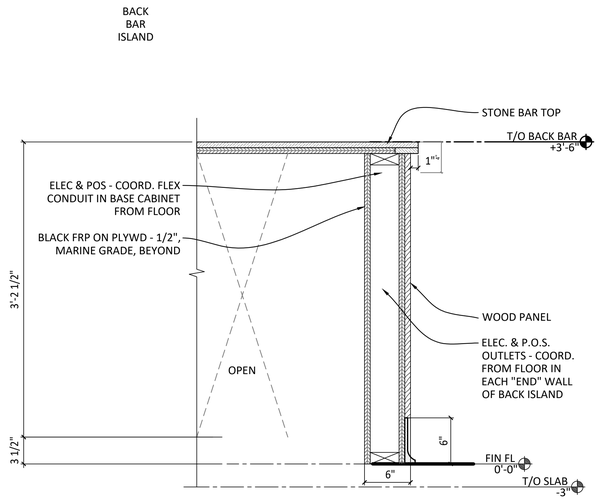

C5	SECTION @ "END WALL" OF BACK BAR ISLAND
A1031	1-1/2" = 1'-0"

NOTES:

DESIGN BASIS:
KEGWORKS

COLOR:
SEE ID

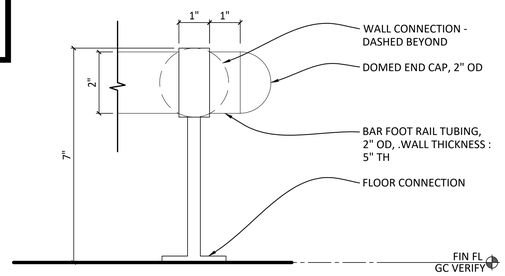

B ELEVATION
BAR FOOT RAIL

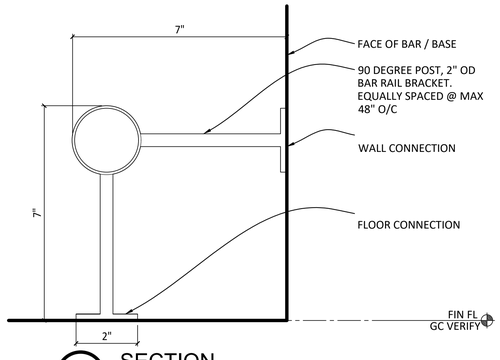

A SECTION
BAR FOOT RAIL

A1	DETAILS @ BAR FOOT RAIL
A1031	6" = 1'-0"

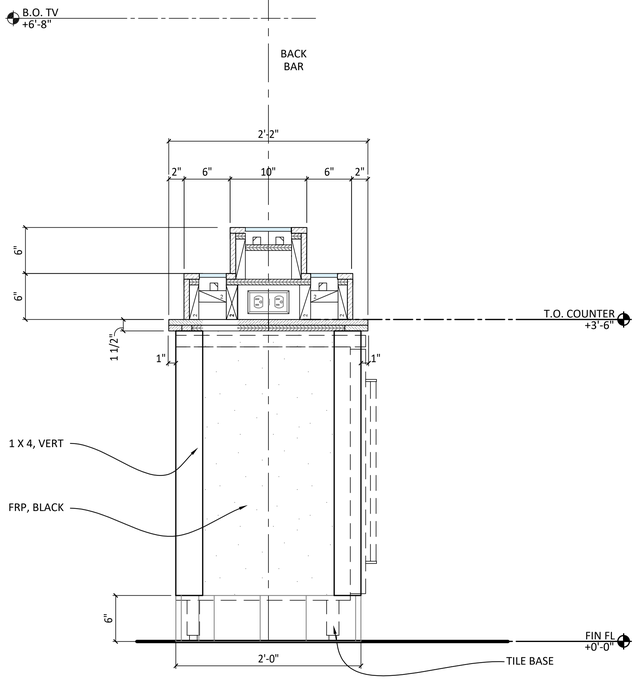

A3	SECTION @ BACK BAR
A1031	1-1/2" = 1'-0"

NOTES:

PROVIDE PURSE HOOKS MOUNTED ON BOTTOM OF BAR FRONT, BETWEEN EACH OUTLET

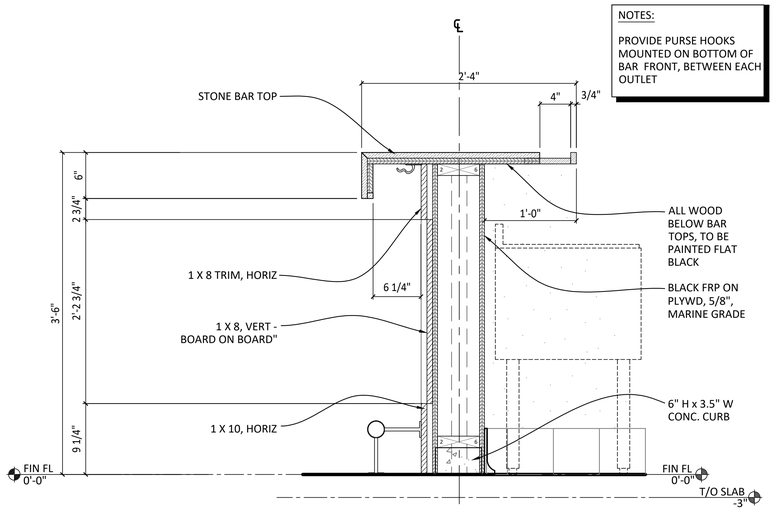

A5	SECTION @ FRONT BAR
A1031	1-1/2" = 1'-0"

KUO DIEDRICH CHI

730 PEACHTREE STREET, NE
STUDIO 325
ATLANTA, GEORGIA 30308
678.244.6270

www.KDCarchitects.com

ARCHITECT:

ARCH. REG: AR91344

CONSULTANT:

REVISIONS

DATE:	DESCRIPTION:
10/18/24	SCHEMATIC DESIGN
6/5/25	DESIGN DEVELOPMENT
10/23/25	50% CONSTRUCTION DOCS
11/14/25	PERMIT SET

PROJECT:

SERENITY SEASIDE RESORT

BUILDING #1

THE INN

186 SOUTH BAY SHORE DRIVE, EASTPOINT, FL 32328

Serenity Seaside Operations, LLC
174 Watercolor Way, PMB 410
Santa Rosa Beach, Florida 32459

JOB NUMBER: 23019.1

DATE: --/--/----

TITLE: INTERIOR DETAILS @ BAR

SHEET: A1031

K:\Projects\23\23019\DWGs\Serenity_Bldg-1_Inn\Sheets\23019.1-A1031.dwg Plotted: Nov 13, 2025 – 6:40pm by CalebLawrence

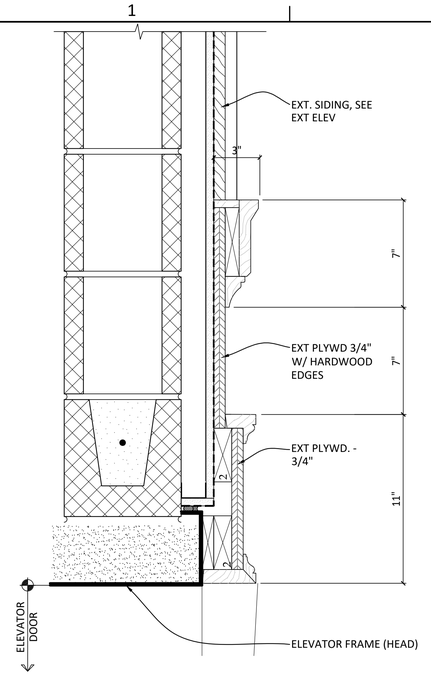

D1 HEAD DTL @ ELEVATOR

A1041 | 3" = 1'-0"

NOTE:

ONLY PROVIDE THIS HEAD & JAMB DETAIL ON "MEMBER" SIDE OF ELEVATOR DOOR

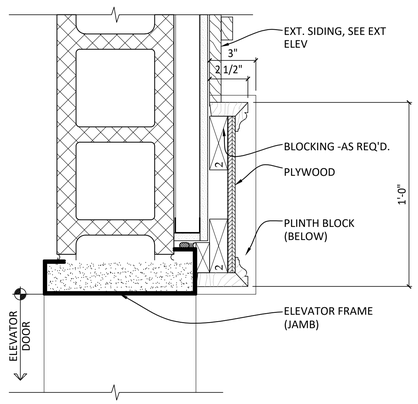

B1 JAMB DTL @ ELEVATOR

A1041 | 3" = 1'-0"

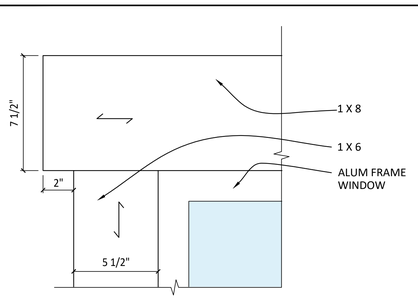

E2 INT HEAD ELEV @ ALUM WINDOW

A1041 | 3" = 1'-0"

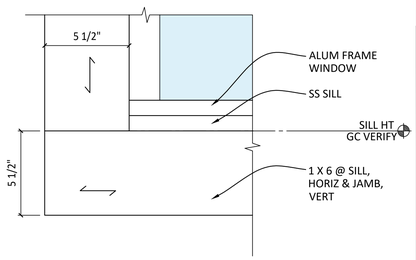

D2 INT SILL ELEV @ ALUM WINDOW

A1041 | 3" = 1'-0"

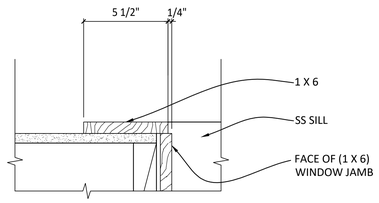

B2 INT JAMB DETAIL @ ALUM WINDOW

A1041 | 3" = 1'-0"

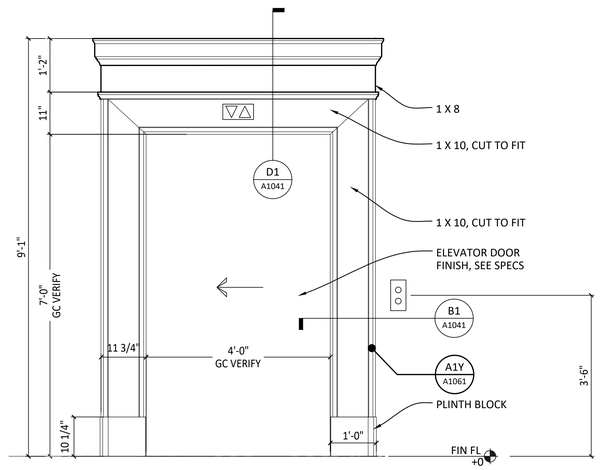

A ELEVATOR DOOR OPENING

EXTERIOR - MEMBER SIDE

E4 ELEV @ ELEVATOR DOOR OPENING - WD

A1041 | 3/4" = 1'-0"

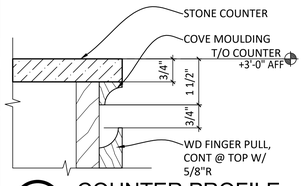

A COUNTER PROFILE

BACK BAR

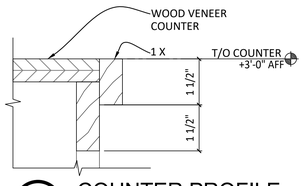

B COUNTER PROFILE

WINE RM

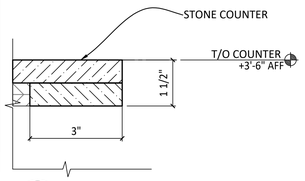

C COUNTER PROFILE

DRINK RAIL

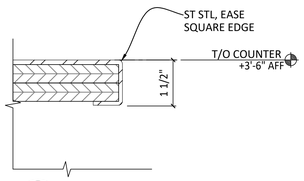

D COUNTER PROFILE

SERVICE

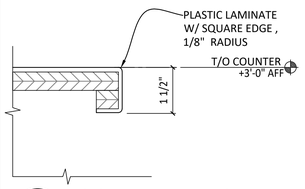

E COUNTER PROFILE

SERVICE

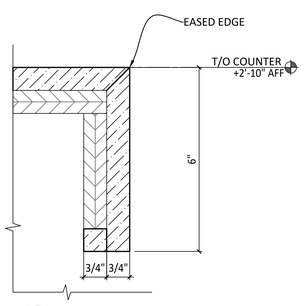

G COUNTER PROFILE

LAV COUNTER

NOTE:

GC TO VERIFY THICKNESS OF SPECIFIED SOLID SURFACE & STONE COUNTERS

A4 COUNTERTOP PROFILES

A1041 | 6" = 1'-0"

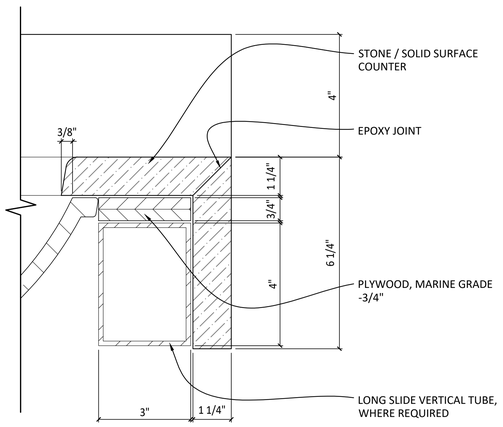

C6 SECTION @ LAV COUNTER

A1041 | 6" = 1'-0"

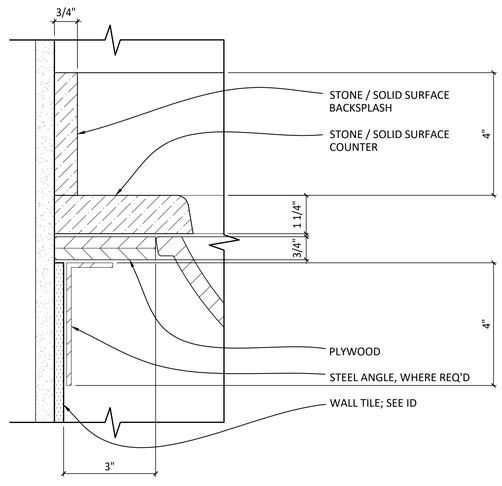

A6 SECTION @ BACKSPLASH OF LAV COUNTER

A1041 | 6" = 1'-0"

SHEET NOTES / LEGEND

1. BASEBOARD UNIT HEATER, SEE MECH/PLUMB

GENERAL NOTES

A. FINISH SCHEDULE (BY ID) ON SHEET A1111

B. FINISH SELECTIONS (BY ID) ON SHEET A1112

KUO DIEDRICH CHI

730 PEACHTREE STREET, NE
STUDIO 325
ATLANTA, GEORGIA 30308
678.244.6270

www.KDCarchitects.com

ARCHITECT:

ARCH. REG: AR91344

CONSULTANT:

REVISIONS

DATE:	DESCRIPTION:
10/18/24	SCHEMATIC DESIGN
6/5/25	DESIGN DEVELOPMENT
10/23/25	50% CONSTRUCTION DOCS
11/14/25	PERMIT SET

PROJECT:

SERENITY SEASIDE RESORT

BUILDING #1

THE INN

186 SOUTH BAY SHORE DRIVE, EASTPOINT, FL 32328

Serenity Seaside Operations, LLC
174 Watercolor Way, PMB 410
Santa Rosa Beach, Florida 32459

JOB NUMBER: 23019.1

DATE: --/--/----

TITLE: INTERIOR PROFILES

SHEET: A1041

K:\Projects\23\23019\DWGs\Serenity_Bldg-1_Inn\Sheets\23019.1-A1041.dwg Plotted: Nov 13, 2025 - 6:40pm by CelebLawrence

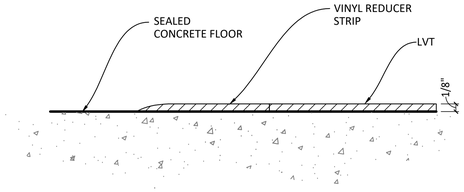

F4	FLOORING TRANSITION: CONC TO LVT
A1051	1'-0" = 1'-0"

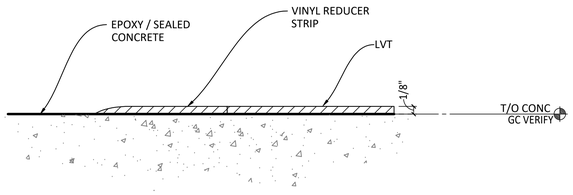

E4	FLOORING TRANSITION: EPOXY TO LVT
A1051	1'-0" = 1'-0"

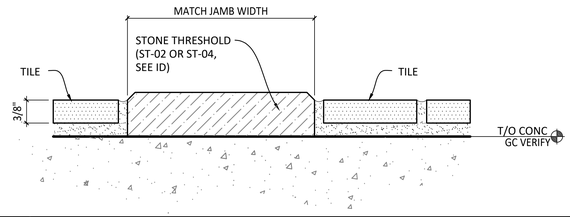

D4	FLOORING TRANSITION: TILE TO TILE @ SHOWERS
A1051	1'-0" = 1'-0"

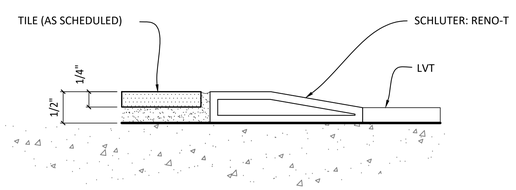

C4	FLOORING TRANSITION: TILE TO LVT
A1051	1'-0" = 1'-0"

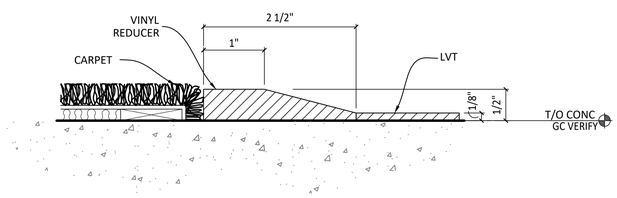

B4	FLOORING TRANSITION: CARPET TO LVT / VCT
A1051	1'-0" = 1'-0"

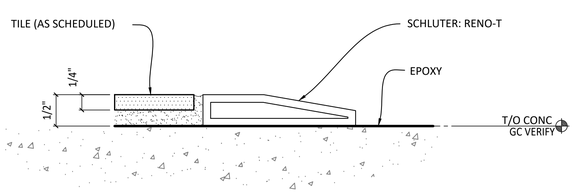

A4	FLOORING TRANSITION: TILE TO EPOXY
A1051	1'-0" = 1'-0"

GENERAL NOTES

A. FINISH SCHEDULE (BY ID) ON SHEET A1111
B. FINISH SELECTIONS (BY ID) ON SHEET A1112

SHEET NOTES / LEGEND

1. -

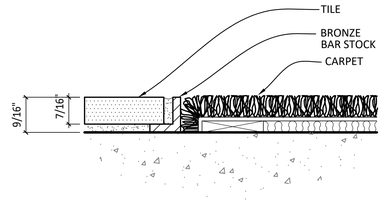

E6	FLOORING TRANSITION: TILE TO CARPET
A1051	1'-0" = 1'-0"

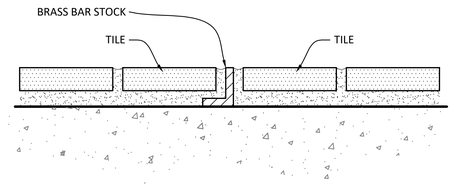

D6	FLOORING TRANSITION: TILE TO TILE
A1051	1'-0" = 1'-0"

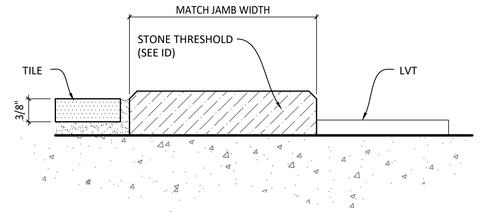

C6	FLOORING TRANSITION: TILE TO TILE (T'HOLD)
A1051	1'-0" = 1'-0"

NOTE:
1. FINISH VARIES
2. GC VERIFY MODEL #:
AHK 1S 80
AHK 1S 100
AHK 1S 125

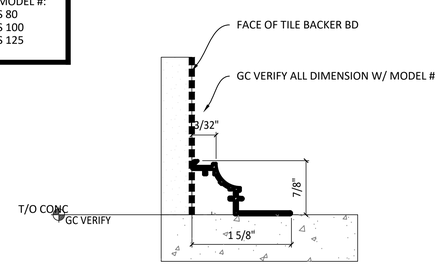

A SCHLUTER: DILEX AHK

A6	FLOORING TRANSITION: TILE BASE TO WALL TILE
A1051	1'-0" = 1'-0"

KUO DIEDRICH CHI
730 PEACHTREE STREET, NE
STUDIO 325
ATLANTA, GEORGIA 30308
678.244.6270
www.KDCarchitects.com

ARCHITECT:

ARCH. REG: AR91344

CONSULTANT:

REVISIONS

DATE:	DESCRIPTION:
10/18/24	SCHEMATIC DESIGN
6/5/25	DESIGN DEVELOPMENT
10/23/25	50% CONSTRUCTION DOCS
11/14/25	PERMIT SET

PROJECT:

SERENITY SEASIDE RESORT

BUILDING #1

THE INN

186 SOUTH BAY SHORE DRIVE, EASTPOINT, FL 32328

Serenity Seaside Operations, LLC
174 Watercolor Way, PMB 410
Santa Rosa Beach, Florida 32459

JOB NUMBER: 23019.1

DATE: --/--/----

TITLE: INTERIOR FLOORING DETAILS

SHEET: A1051

K:\Projects\23\23019\DWGs\Serenity_Bldg-1_Inn\Sheets\23019.1-A1051.dwg Plotted: Nov 13, 2025 - 6:41pm by CalebLawrence

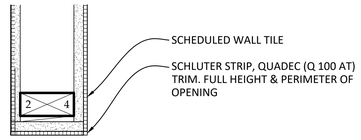

F4 DETAIL @ TILE OPENING
A1052 3" = 1'-0"

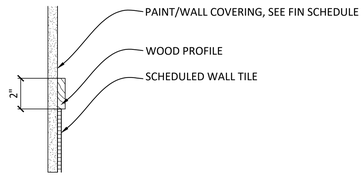

E4 WALL TILE TRANSITION DETAIL
A1052 3" = 1'-0"

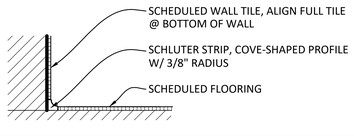

D4 DETAIL @ TILE BASE TRANSITION
A1052 3" = 1'-0"

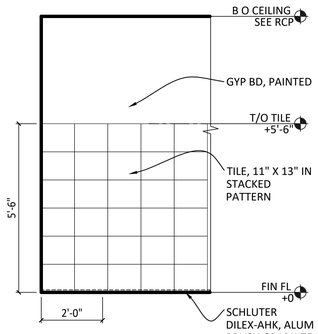

C.1 WALL TILE
WAINSCOT @ ???

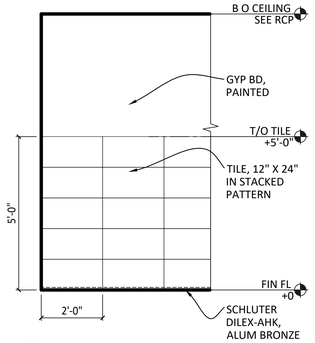

A.1 WALL TILE
WAINSCOT @ ???

NOTE:

SEE FINISH SCHEDULE FOR TILE / GROUT SELECTIONS

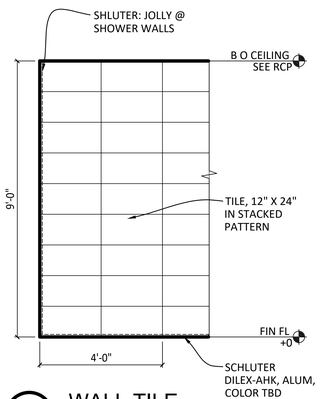

B.1 WALL TILE
FULL HT @ SHOWER WALLS

A2 WALL TILE PATTERN ELEVATIONS
A1052 1/2" = 1'-0"

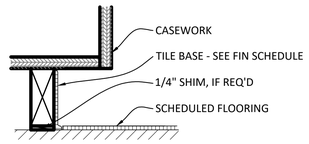

C4 DETAIL @ TILE BASE & CABINET
A1052 3" = 1'-0"

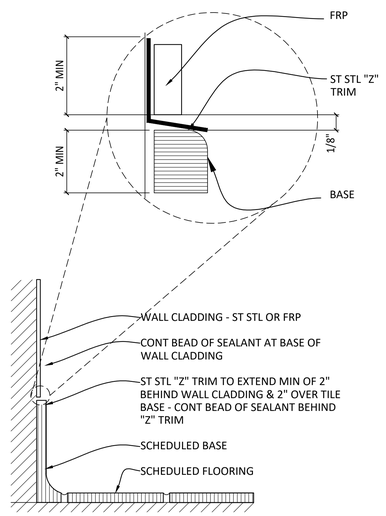

A4 DETAIL @ KITCHEN WALL BASE
A1052 3" = 1'-0"

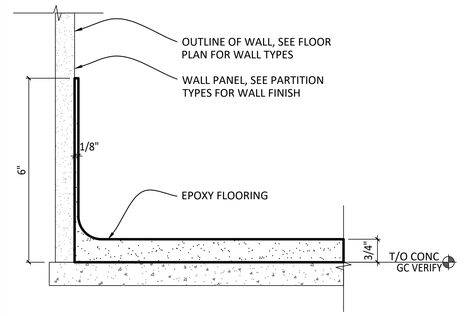

B6 SECTION @ EPOXY COVE BASE
A1052 6" = 1'-0"

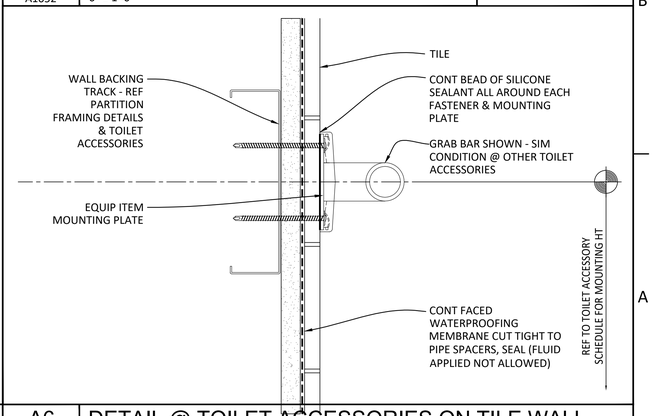

A6 DETAIL @ TOILET ACCESSORIES ON TILE WALL
A1052 6" = 1'-0"

SHEET NOTES / LEGEND

1. -

GENERAL NOTES

A. FINISH SCHEDULE (BY ID) ON SHEET A1111
B. FINISH SELECTIONS (BY ID) ON SHEET A1112

KUO DIEDRICH CHI
730 PEACHTREE STREET, NE
STUDIO 325
ATLANTA, GEORGIA 30308
678.244.6270
www.KDCarchitects.com

ARCHITECT:

ARCH. REG: AR91344

CONSULTANT:

REVISIONS

DATE:	DESCRIPTION:
10/18/24	SCHEMATIC DESIGN
6/5/25	DESIGN DEVELOPMENT
10/23/25	50% CONSTRUCTION DOCS
11/14/25	PERMIT SET

PROJECT:

SERENITY SEASIDE RESORT

BUILDING #1

THE INN

186 SOUTH BAY SHORE DRIVE, EASTPOINT, FL 32328

Serenity Seaside Operations, LLC
174 Watercolor Way, PMB 410
Santa Rosa Beach, Florida 32459

JOB NUMBER: 23019.1

DATE: --/--/----

TITLE: INTERIOR FLOOR + WALL DETAILS

SHEET: A1052

K:\Projects\23\23019\DWGs\Serenity_Bldg-1_Inn\Sheets\23019.1-A1052.dwg Plotted: Nov 13, 2025 - 6:41pm by CoteLawrence

GENERAL NOTES

A. FINISH SCHEDULE (BY ID) ON SHEET A1111

B. FINISH SELECTIONS (BY ID) ON SHEET A1112

SHEET NOTES / LEGEND

1. -

A CROWN

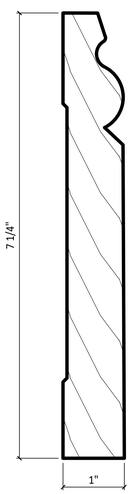

B BASE

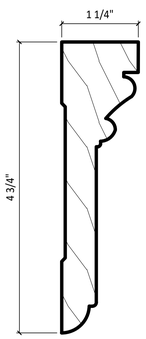

C CASING
-



E CROWN
SPA TREATMENT

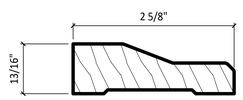

D CASING
RR COUNTER SHELVING

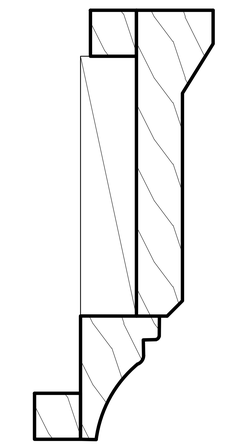

E3 TRIM
AT ELEVATOR

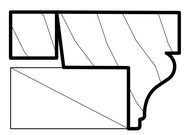

E2 TRIM
AT ELEVATOR

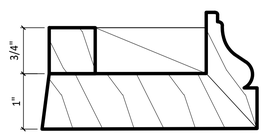

E1 TRIM
AT ELEVATOR

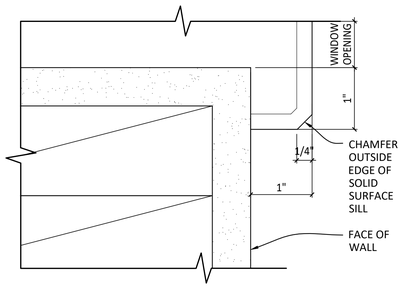

B PLAN
WINDOW SILL

NOTE:
GC TO VERIFY DIMENSION "VARIES" & THICKNESS OF SPECIFIED SOLID SURFACES

NOTE:
SEE FINISH SPECS
- SS-03: BUILDING #1
- SS-02: BUILDING #2

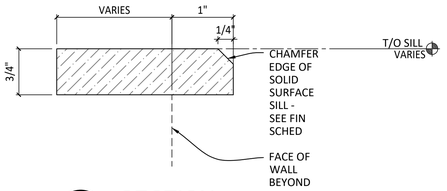

A SECTION
PROFILE

A1	MOULDING PROFILES
A1061	FULL

A6	DETAILS @ WINDOW SILLS
A1061	6" = 1'-0"

KUO DIEDRICH CHI

730 PEACHTREE STREET, NE
STUDIO 325
ATLANTA, GEORGIA 30308
678.244.6270

www.KDCarchitects.com

ARCHITECT:

ARCH. REG: AR91344

CONSULTANT:

REVISIONS

DATE:	DESCRIPTION:
10/18/24	SCHEMATIC DESIGN
6/5/25	DESIGN DEVELOPMENT
10/23/25	50% CONSTRUCTION DOCS
11/14/25	PERMIT SET

PROJECT:

SERENITY SEASIDE RESORT

BUILDING #1

THE INN

186 SOUTH BAY SHORE DRIVE, EASTPOINT, FL 32328

Serenity Seaside Operations, LLC
174 Watercolor Way, PMB 410
Santa Rosa Beach, Florida 32459

JOB NUMBER: 23019.1

DATE: --/--/----

TITLE: INTERIOR PROFILES

SHEET: A1061

K:\Projects\23\23019\DWGs\Serenity_Bldg-1_Inn\Sheets\23019.1-A1061.dwg Plotted: Nov 13, 2025 - 6:41pm by CoteLawrence

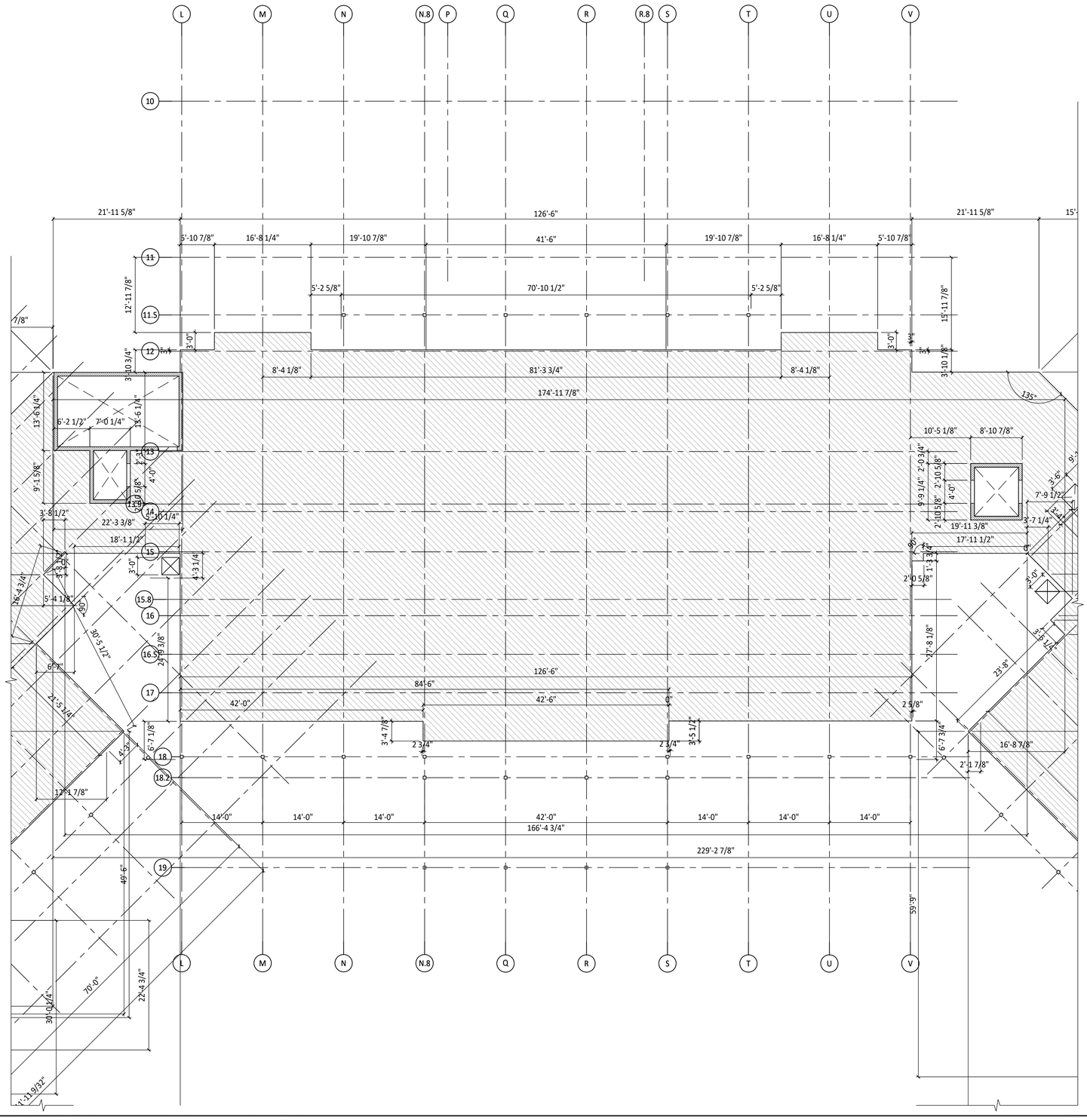

SHEET NOTES / LEGEND

1. CONC SLAB EDGE ALIGNS W/ GRIDLINE
2. COLUMN FACE ALIGNS W/ GRIDLINE
3. EDGE OF BEARING WALL STUD ALIGNED W/ EDGE OF SLAB

LEGEND

101	DOOR / CASED OPENING	#	WINDOW TAG
A#	WALL PARTITION TAG	L#	LOUVER TAG
101	ROOM NUMBER TAG	SLOPE	DIRECTION OF SLOPEDFLOOR

AD	AREA DRAIN	EF	EXHAUST FAN
CU	CONDENSING UNIT	HB	HOSE BIBB
FE	FIRE EXTINGUISHER	POS	POINT OF SALE
FD	FLOOR DRAIN	WH	WATER HEATER

GENERAL NOTES

A. ALL FURNITURE IS BY OWNER

B. HOTEL ROOM TYPE MATRIX, C4/A114

C. INTERIOR PARTITION TYPES TO BE TYPE "A", U.N.O - SEE A1/A851

D. TOP OF PARTITION DETAILS, SEE A1/A861

E. FIRE EXTINGUISHER DETAILS, SEE A4/A871

F. REFER TO SHEETS G104 - G107 FOR ADA REQUIRED DIMENSIONS

G. TYP DOOR HINGE INSTALL DIMENSION @ PERPENDICULAR WALLS, E6/A871

H. DOOR SCHEDULES ON SHEETS A801 & A802

I. METAL STUD WALL FRAMING ADDITIONAL DETAILS ON SHEETS A871 & A872

J. UL PENETRATIONS & UL ASSEMBLIES: SEE SHEETS A881 - A885

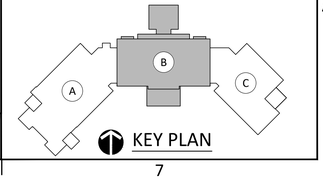

KEY PLAN

A2	SLAB EDGE PLAN: LEVEL 300 - PART "B"
A003B	1/8" = 1'-0"

PROJECT NORTH

KUO DIEDRICH CHI

730 PEACHTREE STREET, NE
STUDIO 325
ATLANTA, GEORGIA 30308
678.244.6270

www.KDCarchitects.com

ARCHITECT:

ARCH. REG: AR91344

CONSULTANT:

REVISIONS

DATE:	DESCRIPTION:
10/18/24	SCHEMATIC DESIGN
6/5/25	DESIGN DEVELOPMENT
10/23/25	50% CONSTRUCTION DOCS
11/14/25	PERMIT SET

PROJECT:

SERENITY SEASIDE RESORT

BUILDING #1

THE INN

186 SOUTH BAY SHORE DRIVE, EASTPOINT, FL 32328

Serenity Seaside Operations, LLC
174 Watercolor Way, PMB 410
Santa Rosa Beach, Florida 32459

JOB NUMBER: 23019.1

DATE: --/--/----

TITLE: SLAB EDGE PLAN: LEVEL 300 - PART "B"

SHEET: A003B

K:\Projects\23\23019\DWGs\Serenity_Bldg-1_Inn\Sheets\23019.1-A003B.dwg Plotted: Nov 13, 2025 - 8:07pm by ColebLawrence