LEGEND

ALL MAY NOT APPLY

- SUPPLY DIFFUSER
- OPTIONAL AIR DISTRIBUTION CORE STYLE (REFER TO MANUFACTURER FOR MORE OPTIONS) — 2-WAY, 3-WAY
- RETURN GRILLE
- EXHAUST GRILLE
- AIR HANDLING UNIT (VERTICAL/HORIZONTAL)
- CEILING RECESSED AIR HANDLER
- WALL MOUNT AIR HANDLER
- 1 OR 4-WAY CEILING MOUNT CASSETTE AIR HANDLER
- BCU-# — BC CONTROLLER
- CU/HP-# — CONDENSING UNIT HEAT PUMP
- EF-# — CEILING MOUNTED EXHAUST FAN
- MANUAL BALANCING DAMPER
- SD — DUCT MOUNTED SMOKE DETECTOR
- TS — DUCT MOUNTED TEMPERATURE SENSOR
- M — DUCT MOUNTED MOTORIZED DAMPER
- BD — DUCT MOUNTED BACKDRAFT DAMPER
- BARO — DUCT MOUNTED BAROMETRIC DAMPER
- DUCT CONTINUES UP
- THERMOMETER
- PRESSURE GAUGE
- H — DUCT HUMIDITY SENSOR
- DUCT FLOW METER
- M — MOTORIZED CONTROL VALVE
- BALANCING VALVE
- SHUT-OFF/ISOLATION VALVE
- SA/RA TAKE-OFF WITH FLEX TAKE-OFF W/ DAMPER
- SA/RA TAKE-OFF WITH RIGID DUCT TAKE-OFF W/ DAMPER
- SQUARE TO ROUND
- DEMOLITION HATCH INDICATION

EQUIPMENT, PIPE, DUCT, FITTINGS, ETC TO BE DEMOLISHED WILL BE INDICATED SPECIFICALLY OR BY HATCHED MARKING.

AIR DISTRIBUTION DEVICE TAG

A — DEVICE TAG
110 — AIRFLOW (CFM)
6x6 — DEVICE SIZE

SUPPLY/RETURN DUCT FIRST DIMENSION = WIDTH SECOND DIMENSION =HEIGHT — W x H

SUPPLY/RETURN DUCT ROUND PIPE D=INSIDE DIAMETER DIMENSION — DØ

- # — DEMOLITION KEYNOTE
- # — KEYNOTE
- CONNECT TO EXISTING AT THIS POINT
- DEMOLISH BACK TO THIS POINT
- ACCESS PANEL
- UNION
- FLEXIBLE CONNECTION
- CHECK VALVE
- STRAINER
- PUMP
- T — TEMPERATURE SENSOR
- FD — FIRE DAMPER
- SD — SMOKE DAMPER
- FD/SD — COMBINATION FIRE/SMOKE DAMPER
- C — CONDENSATE DRAIN PIPE
- C — CLEAN-OUT IN CD
- CD TRAP (REFER TO DETAIL)
- REF — INSULATED REFRIGERANT LINES
- T — THERMOSTAT
- S — SENSOR - ZONE SENSOR
- TS — TEMPERATURE SENSOR
- CO — CARBON MONOXIDE SENSOR
- CO2 — CARBON DIOXIDE SENSOR
- DG / UC — DOOR GRILLE AND 1" UNDERCUT

ABBREVIATIONS

ALL MAY NOT APPLY

AHU	AIR HANDLING UNIT	EA	EXHAUST AIR	MBH	1,000 BTUS PER HOUR
BTU	BRITISH THERMAL UNIT	EAT	ENTERING AIR TEMPERATURE	MFG.	MANUFACTURER
CD	CONDENSATE	EF	EXHAUST FAN	OA	OUTSIDE AIR
CFM	CUBIC FEET PER MINUTE	ESP	EXTERNAL STATIC PRESSURE (In W.C.)	RA	RETURN AIR
CHWS	CHILLED WATER SUPPLY	EWT	ENTERING WATER TEMPERATURE	RAG	RETURN AIR GRILLE
CHWR	CHILLED WATER RETURN	EX	EXISTING	RND	ROUND
CRAH	COMPUTER ROOM AIR HANDLER	FD	FIRE DAMPER	RPM	REVOLUTIONS PER MINUTE
CRCU	COMPUTER ROOM CU	FPI	FINS PER INCH	SA	SUPPLY AIR
CHS	CONDENSING UNIT	GPM	GALLONS PER MINUTE	SD	SMOKE DAMPER
CWS	CHILLED WATER SUPPLY	HHWS	HEATING HOT WATER SUPPLY	SM	SURFACE MOUNTED
ΔP	DIFFERENCE IN PRESSURE	HHWR	HEATING HOT WATER RETURN	SS	STAINLESS STEEL
ΔT	DIFFERENCE IN TEMPERATURE	HP	HEAT PUMP	TSP	TOTAL STATIC PRESSURE
DB	DRY BULB TEMPERATURE (DEG. F)	HWS	HOT WATER SUPPLY	UNO	UNLESS NOTED OTHERWISE
DEG. F	DEGREES FAHRENHEIT	In W.C.	INCHES OF WATER COLUMN	V/PZ	VOLT/PHASE
DDC	DISTRIBUTED DIGITAL CONTROLS	LAT	LEAVING AIR TEMPERATURE	VFD	VARIABLE FREQUENCY DRIVE
DN	DOWN	LWT	LEAVING WATER TEMPERATURE	WB	WET BULB TERMPERATURE (DEG. F)

REFRIGERANT PIPING

1.BELOW FINISHED FLOOR: COPPER TUBING - TYPE "K" SOFT ANNEALED TEMPER, NO JOINTS BELOW GRADE.

2.ABOVE FINISHED FLOOR: COPPER TUBING - TYPE "L"HARD DRAWN TEMPER WITH WROUGHT COPPER FITTINGS AND BRAZED JOINTS AT 1100 DEG F; FLUX MATERIAL NOT ALLOWED.

3.SUCTION LINES SHALL BE INSULATED WITH MINIMUM 3/4" ARMAFLEX INSULATION WITH TAPED JOINTS. INSULATION SHALL ALWAYS COMPLY WITH FBC-EC 403.2.10. HANGERS STRAPS OR SADDLES SHALL NOT COMPRESS INSULATION BELOW REQUIRED SIZE.

4.EXTERIOR PIPING INSULATION SHALL BE PROTECTED FROM UV RADIATION. COVER ALL EXTERIOR REFRIGERANT LINES WITH ALUMINUM JACKET, INSTALLED TO SHED WATER AND SECURED WITH STAINLESS STEEL BANDS 12" O.C.

5.SYSTEMS SHALL BE PLACED UNDER A VACUUM FOR REMOVAL OF NON-CONDENSABLES PRIOR TO BEING PUT INTO SERVICE.

6.SYSTEMS SHALL BE PRESSURE TESTED USING NITROGEN PRIOR TO BEING PUT INTO SERVICE.

7.PIPES SHALL BE SIZED BY THE EQUIPMENT MFG.

CODE REFERENCE

ALL MAY NOT APPLY

THE LATEST EDITIONS OF THE ESTABLISHED STANDARDS OF THE FOLLOWING ORGANIZATIONS, AND INDIVIDUAL STANDARDS NAMED SHALL BE FOLLOWED THE SAME AS IF THEY WERE FULLY WRITTEN HEREIN AND CONSTITUTE A PART OF THE SPECIFICATION REQUIREMENTS EXCEPT WHERE OTHERWISE SPECIFIED:

FBC, BUILDING FLORIDA BUILDING CODE 8TH EDITION

FBC, MECHANICAL FLORIDA BUILDING CODE 8TH EDITION

FBC, EXISTING BUILDING FLORIDA BUILDING CODE 8TH EDITION

FBC, FUEL GAS FLORIDA BUILDING CODE 8TH EDITION

FBC, ENERGY CONSERVATIONFLORIDA BUILDING CODE 8TH EDITION

FFPC FLORIDA FIRE PREVENTION CODE, 2023 8TH EDITION

NFPA 13 STANDARD FOR THE INSTALLATION OF FIRE SPRINKLER SYSTEMS

NFPA 51B STANDARD FOR FIRE PREVENTION DURING WELDING, CUTTING AND OTHER HOT WORK

NFPA 54 NATIONAL FUEL GAS CODE

NFPA 90A STANDARD FOR THE INSTALLATION OF AIR CONDITIONING AND VENTILATION SYSTEMS

NFPA 90B STANDARD FOR THE INSTALLATION OF WARM AIR HEATING AND AIR CONDITIONING SYSTEMS

NFPA 101 LIFE SAFETY CODE

NFPA 101A GUIDE ON ALTERNATIVE APPROACHES TO LIFE SAFETY

NFPA 101B CODE FOR MEANS OF EGRESS FOR BUILDINGS AND STRUCTURES

NFPA 900 BUILDING ENERGY CODE

ASTM AMERICAN SOCIETY FOR TESTING AND MATERIALS

ANSI AMERICAN NATIONAL STANDARDS INSTITUTE

ASME AMERICAN SOCIETY OF MECHANICAL ENGINEERS

ADA AMERICAN WITH DISABILITIES ACT

UL UNDERWRITERS LABORATORIES

THESE CODE AND STANDARDS SHALL BE CONSIDERED A MINIMUM REQUIREMENT. THE CONTRACTOR SHALL NOT RELIEVED FROM PROVIDING HIGHER GRADE MATERIALS, PRODUCTS AND WORKMANSHIP WHICH MAY BE SPECIFIED WITHIN THESE DOCUMENTS.

DUCTWORK SPECIFICATIONS

1.SHEET METAL DUCTWORK

1.1.DUCT MATERIAL CLASS "A" GALVANIZED STEEL OR ROLLED STEEL IN COMPLIANCE WITH SMACNA 205-3RD EDITION LOW/MEDIUM PRESSURE DUCT STANDARDS TABLE
1.1. DUCTS SHALL BE TESTED, VERIFIED AND RECORDED IN ACCORDANCE WITH ASHRAE 90.1-2013 REQUIREMENT BASED ON LEAKAGE RATE LESS THAN 4% PER 100SF OF DUCT.
1.2.SEALER: LOW VOC MASTIC PAINT.

2.GENERAL:

2.1.LINES SHALL BE RUN STRAIGHT, LEVEL, PLUMB, AND ROUTED AS INDICATED IN THESE DRAWINGS. ALL LABELED DUCT DIMENSIONS ARE INTERNAL SIZES AND INDICATE FULL INSIDE CLEAR FREE AREA.
2.2.MINOR MODIFICATIONS TO DUCT ROUTING DUE TO OBSTRUCTIONS OR COORDINATION WITH OTHER TRADES WILL BE FURNISHED WITHOUT ADDITIONAL COST TO THE OWNER. ANY CHANGES IN SIZE TO DUCTWORK MUST BE APPROVED BY THE ENGINEER PRIOR TO FABRICATION AND INSTALLATION.
2.3.ALL MITERED RECTANGULAR DUCT 90 DEGREE ELBOWS SHALL BE PROVIDED WITH TURNING VANES.
2.4.ALL SUPPLY, RETURN AND EXHAUST DUCTS SHALL BE EXTERNALLY INSULATED UNLESS OTHERWISE NOTED. INSULATION SHALL BE EQUAL TO JOHNS MANVILLE MICROLIGHT XL 2" THICK 0.75 PCF R6.0 OUT OF THE BOX WITH FSK VAPOR BARRIER. SEAL WITH FIRE RATED MASTIC SEAL PER UL-181A-M AT ALL JOINTS AND SEAMS; OR APPROVED ACRYLIC FOIL PRESSURE SENSITIVE TAPE PER UL-181A-P APPLIED USING SQUEEGEE APPROVED METHOD AT JOINTS AND SEAMS. RUBBER BASE TAPES ARE NOT ALLOWED.
2.5.DUCTBOARD IS NOT ALLOWED UNLESS SPECIFICALLY APPROVED BY THE ENGINEER OF RECORD.
2.6.DUCTS SHALL HAVE MINIMUM INSULATION VALUES AS LISTED IN FBC-EC 403.2.9.1.

3.FLEXIBLE DUCTS:

3.1.DUCT TO AIR TERMINALS SHALL BE LIMITED IN LENGTH AS SHOWN IN DETAILS.
3.2.SHALL BE UL LISTED AS A CLASS 1 AIR DUCT COMPLYING WITH UL STANDARD 181, NFPA 90A & 90B AND HAVE A FLAME SPREAD RATING OF NOT OVER 25 AND A SMOKE DEVELOPMENT RATING NOT OVER 50.
3.3.SHALL HAVE A POSITIVE OPERATING PRESSURE OF 10" MINIMUM. FLEXIBLE DUCT SHALL HAVE BEEN TESTED FOR A MAXIMUM INTERNAL OPERATING TEMPERATURE OF 200°F UNDER CONTINUOUS OPERATION.
3.4.SHALL BE RATED FOR A MINIMUM AIR VELOCITY OF 5000 FPM.
3.5.INSULATION SHALL BE A MINIMUM OF 2" THICK 3/4 PCF DENSITY FIBERGLASS. SUPPLY DUCTS SHALL HAVE INSULATION WITH A MINIMUM R-VALUE OF 4.2, BUT R-6 FOR SUPPLY DUCT IN ATTIC AND OUTDOOR SPACES. OUTER LINER SHALL BE A BI-DIRECTIONAL FIBERGLASS REINFORCED METALIZED VAPOR BARRIER. FLEXIBLE DUCTWORK SHALL BE INSTALLED AS STRAIGHT AS POSSIBLE, AND SHALL BE ROUTED AND SUPPORTED WITHOUT FORMING CRIMPS OR OTHER AIR FLOW RESTRICTIONS.
3.6.PROVIDE SQUARE TO ROUND ADAPTERS OR BOOTS TO CONNECT TO AIR DEVICE NECK WHERE REQUIRED. FLEXIBLE DUCT SHALL HAVE A FULL 10-YEAR WARRANTY.
3.7.INNER LINER SHALL CONSIST OF A CPE CORE PERMANENTLY BONDED TO A COATED SPRING STEEL WIRE HELIX (MIN. 041" THICK).
3.8.SHALL BE THERMAFLEX TYPE M-KE, FLEXMASTER TYPE 8M OR EQUAL.
3.9.SHALL BE SUPPORTED SO THAT HORIZONTAL RUNS ARE STRAIGHT AND WITHOUT SAGS OR BENDS. SHEET METAL SADDLES SHALL BE PROVIDED AT ALL HANGERS FOR FLEX DUCTS TO PREVENT KINKING OF THE DUCTS AND EXCESSIVE COMPRESSION OF THE INSULATION.

HVAC GENERAL NOTES

1.ONLY NEW EQUIPMENT SHALL BE PROVIDED UNLESS INDICATED AS EXISTING TO REMAIN.

2.ALL CONNECTIONS TO EQUIPMENT SHALL BE MADE WITH FLEXIBLE REGIONS FOR VIBRATION ISOLATION.

3.ALL EQUIPMENT SHALL BE LABELED SO THAT USERS CAN IDENTIFY EACH PIECE OF EQUIPMENT. LABELS SHALL BE CONSISTENT WITH EQUIPMENT TAGS THAT ARE LISTED IN THE SCHEDULES WITHIN THESE DOCUMENTS. ANY ABOVE CEILING EQUIPMENT SHALL HAVE A LABEL PROVIDED ON THE CEILING BELOW THE UNIT FOR EASE OF LOCATING BY MAINTENANCE PERSONNEL.

4.ALL EQUIPMENT SHALL BE INSTALLED PER MANUFACTURERS WRITTEN INSTRUCTIONS AND RECOMMENDATIONS.

5.INSTALL DUCTWORK AND PIPING AS HIGH AS POSSIBLE ABOVE CEILING.

6.COORDINATE THE INSTALLATION OF DUCTWORK AND PIPING WITH ELECTRICAL EQUIPMENT SO THAT THE REQUIRED CODE CLEARANCES TO ELECTRICAL EQUIPMENT IS MAINTAINED.

7.DUCTWORK AND PIPING INSTALLATIONS SHALL ALLOW FOR EQUIPMENT RECOMMENDED MAINTENANCE CLEARANCES. CONVENIENT ACCESS FOR REMOVAL OF FILTERS SHALL BE MAINTAINED.

8.MATERIALS INSTALLED WITHIN A RETURN AIR PLENUM SHALL BE NONCOMBUSTIBLE.

9.COORDINATE THE PLACEMENT AIR DISTRIBUTION EQUIPMENT WITH THE CEILING AND LIGHTING LAYOUT.

10.THE CEILING DIFFUSERS SHALL BE 4-WAY THROW UNLESS OTHERWISE NOTED.

11.AT THE ONSET OF TEST AND BALANCE ACTIVITIES PROVIDE NEW FILTERS TO ALL UNITS. DO NOT OPERATE UNITS WITHOUT FILTERS DURING CONSTRUCTION. SEAL ALL OPEN ENDED DUCTS DURING CONSTRUCTION.

12.ENSURE ALL EQUIPMENT HAS BEEN CLEANED AT THE END OF THE PROJECT.

13.DO NOT LOCATE AIR INTAKES CLOSER THAN 10 FEET FROM ANY VENT OR EXHAUST OUTLETS. ROUTE TOILET EXHAUST TO LOCATION SHOWN ON PLANS. WALL CAPS SHALL BE ALUMINUM CONSTRUCTION WITH BACKDRAFT DAMPER, BIRD AND INSECT SCREENS.

14.PROVIDE FIRE DAMPER IF SHOWN ON PLANS, WHERE DUCT PENETRATES FIRE-RATED CONSTRUCTION. ATTACH 1/2" OR LARGER TEXT LABELING THE DAMPER ACCESS LOCATION(S). EQUIVALENT APPLIES FOR SMOKE DAMPER AND FIRE/SMOKE DAMPER.

15.INSTALL DUCT MOUNTED SMOKE DETECTOR (FURNISHED BY DIVISION 26) IN SUPPLY AIR DUCT BEFORE ANY TAKE OFFS FOR AIR HANDLING UNITS WITH SUPPLY AIR CAPACITY OF 2000 CFM OR GREATER.

16.WHERE FIRE, SMOKE, COMBINATION FIRE SMOKE DAMPERS CONTROL DAMPERS, VALVES, COILS OR OTHER DEVICE NEEDING ACCESS ARE INSTALLED, PROVIDE DUCT ACCESS DOORS. WHERE INSTALLED IN INACCESSIBLE LOCATIONS, PROVIDE CEILING/WALL ACCESS PANELS. PANELS LOCATED IN RATED ASSEMBLIES SHALL BEAR A UL RATING. COORDINATE LOCATION OF SUCH ACCESS WITH ARCHITECT PRIOR TO INSTALLATION.

17.PROVIDE MEANS OF TEST AND BALANCE IN ALL TAKE OFF FITTINGS OF SUPPLY EXHAUST. RETURN SYSTEMS AND AT EACH POINT WHERE A BRANCH SERVES TWO OR MORE GRILLES, WHETHER SHOWN ON THE PLANS OR NOT.

18.WHERE CONFLICTS BETWEEN LIGHT SWITCHES AND THERMOSTAT/HUMIDISTAT LOCATIONS, THE LIGHT SWITCH TAKES PRECEDENCE. CONTROLLERS SHALL BE MOUNTED ADJACENT AND WITHIN 48" AFF.

19.PRODUCE MANAFACTURER'S INSTALLATION INSTRUCTION AT INSPECTION PER FBC-M304.1:

19.1.SPLIT A/C EQUIPMENT: LENNOX, TRANE, CARRIER, DAIKIN
19.2.AIR DISTRIBUTION: PRICE, METALAIRE, TITUS
19.3.FANS: PENNBERRY, GREENHECK, BROAN, PANASONIC, COOK
19.4.LOUVERS: GREENHECK, RUSKIN, POTTORFF

DESIGN CRITERIA

BUILDING TYPE GROUP B, BUSINESS

CLIMATE ZONE 2A, MADISON, FLORIDA

OUTDOOR DESIGN CONDITIONS (SUMMER) 95 DEG Fdb, 77 DEG Fwb

OUTDOOR DESIGN CONDITIONS (WINTER) 20 DEG Fdb

INTERIOR DESIGN CONDITIONS 75 DEG F COOLING, 72 DEG F HEATING

CONDENSATE PIPING

1.CONDENSATE DRAIN PIPING SHALL BE SCHEDULE 40 PVC WITH SOLVENT WELD FITTINGS.

2.ALL CONDENSATE DRAIN PIPE SYSTEMS SHALL HAVE A BUILT TRAP AT EACH PIECE OF EQUIPMENT PER DETAILS.

3.ALL LINES SHALL BE INSULATED WITH 1/2" ARMAFLEX FROM EQUIPMENT TO APPROVED DISPOSAL POINT OR OUTSIDE AT GRADE IN COMPLIANCE WITH FBC-M 307.2.1. OUTSIDE DISPOSAL AT EARTH SHALL BE MINIMUM 1 FOOT AWAY FROM BUILDING STRUCTURE AND FOUNDATION.

4.TRAP AIR CONDITIONING CONDENSATE AND RUN TO LOCATION SHOWN ON PLANS. MECHANICAL CONTRACTOR SHALL BE RESPONSIBLE FOR THE FIRST 12" OF CONDENSATE PIPE, INCLUDING TRAP. PLUMBING CONTRACTOR SHALL BE RESPONSIBLE FOR ALL CONDENSATE PIPE AFTER 12" OF PIPE FROM THE UNIT, UP TO AND INCLUDING CONDENSATE TERMINATION.

5.COVER ALL EXTERIOR CONDENSATE LINES WITH ALUMINUM JACKET, INSTALLED TO SHED WATER AND SECURED WITH STAINLESS STEEL BANDS 12" O.C.

6.IF OTHERWISE UNSPECIFIED, TERMINATE CONDENSATE INTO STORM CONNECTION, OR ARCHITECT-APPROVED GRAVEL PATCH OR DRYWELL AT LEAST 12" AWAY FROM BUILDING.

7.PROVIDE CONDENSATE SAFETY SWITCH AND UNIT SHUTOFF SEQUENCE IN THE EVENT OF CONDENSATE OVERFLOW OR BACKUP.

8.CONDENSATE DRAIN SIZING (PER FBC-M TABLE 307.2.2)

UP TO 20 TONS	3/4" DIAMETER
21 TO 40 TONS	1"DIAMETER
41 TO 90 TONS	1 1/4"DIAMETER
91 TO 125 TONS	1 1/2" DIAMETER
126 TO 250 TONS	2" DIAMETER

251 AND ABOVE SIZED BASED ON ACTUAL FLOW

GENERAL NOTES

1.THE ENGINEER SHALL NOT BE HELD RESPONSIBLE FOR ANY MISUSE AND/OR MISREPRESENTATION OF THIS SET OF DOCUMENTS.

2.THE CONTRACTOR ASSUMES RESPONSIBILITY FOR THE USE OF THE CONTRACT DOCUMENTS. THE CONTRACTOR SHALL MAKE THEMSELVES AWARE OF PROJECT CONDITIONS AND OWNER REQUIREMENTS PRIOR TO PROCUREMENT OF EQUIPMENT AND SERVICES. CHANGES IN PROJECT COST WILL NOT BE GRANTED DUE TO FIELD CONFLICTS AND OR PROJECT CONDITIONS.

3.THIS SET OF DRAWINGS AND SPECIFICATIONS SHALL NOT BE CONSIDERED A SET OF CONSTRUCTION DOCUMENTS UNLESS A SIGNATURE AND DATE ARE AFFIXED TO THE DRAWINGS AND SPECIFICATIONS BY THE ENGINEER OF RESPONSIBLE CHARGE OF THE GIVEN DISCIPLINE. PRINTED COPIES OF THIS DOCUMENT ARE NOT CONSIDERED SIGNED AND SEALED UNLESS EMBOSSED AND THE SHA AUTHENTICATION CODE MUST BE VERIFIED ON ELECTRONIC COPIES.

4.CONFLICTS BETWEEN THIS SET OF DRAWINGS AND THE CONTRACT SPECIFICATIONS SHALL BE RESOLVED BY THE ENGINEER OF RECORD. THE CONTRACTOR DOES NOT HAVE THE AUTHORITY TO INTERPRET CONFLICTS AND RESOLVE ISSUES WITHOUT WRITTEN DIRECTION FROM THE ENGINEER OF RECORD.

5.ANY CONFLICTS IN THE FIELD OR WITHIN THESE DOCUMENTS SHALL BE RECORDED AND PROVIDED TO THE ENGINEER OF RECORD ON THE CONTRACTOR'S STANDARD LETTERHEAD. WRITTEN DIRECTION RESOLVING CONFLICT WILL BE ISSUED BY THE ENGINEER OF RECORD.

6.PRIOR TO INSTALLATION, COORDINATE AND ADJUST THE FINAL LOCATION OF ALL WALL MOUNTED DEVICES AND EQUIPMENT WITH ALL CASEWORK, SHELVING OR OTHER WALL MOUNTED FURNISHINGS.

7.PLANS ARE DIAGRAMMATIC IN NATURE AND INTENDED TO SHOW THE GENERAL SCOPE OF THE WORK TO BE PERFORMED. REFER TO ARCHITECTURAL AND STRUCTURAL DRAWINGS FOR ALL DIMENSIONS.

8.DUE TO THE SMALL SCALE OF THE DRAWINGS, AND TO UNFORESEEN JOB CONDITIONS, ALL REQUIRED OFFSETS, TRANSITIONS AND FITTINGS MAY NOT BE SHOWN BUT SHALL BE PROVIDED AT NO ADDITIONAL COST.

9.THE CONTRACTOR SHALL COORDINATE WITH OTHER TRADES AND EXISTING EQUIPMENT TO ENSURE THE EQUIPMENT SPECIFIED WILL WORK FOR THE SPACES PROVIDED. FINAL DIMENSIONS OF SYSTEMS SHOWN ON THESE PLANS SHALL BE COORDINATED IN THE FIELD. THE CONTRACTOR SHALL ASSUME RESPONSIBILITY FOR PROVIDING OFFSETS AND TRANSITIONS TO FIT IN SPACES PROVIDED AND AT NO COST TO THE OWNER.

10.THE CONTRACTOR IS RESPONSIBLE FOR ANY SPECIAL REQUIREMENTS INVOLVED IN INSTALLING EQUIPMENT IN THE BUILDING. DISMANTLING AND REASSEMBLING OF ANY EQUIPMENT SHALL BE DONE AS REQUIRED TO BRING INTO THE BUILDING AND EQUIPMENT ROOMS.

11.ALL WORK PERFORMED AS PART OF THIS PROJECT SHALL BE PERFORMED BY EXPERIENCED TRADESMEN WHO ARE TRAINED, EXPERIENCED, AND SKILLED IN THE TASKS INCIDENTAL TO THE PROJECT.

12.ALL WORK SHALL COMPLY WITH APPLICABLE OSHA AND EPS REGULATIONS AND GUIDELINES.

13.THE CONTRACTOR PERFORMING WORK ON THIS PROJECT WILL BE RESPONSIBLE FOR REGULARLY CLEANING THE WORK AREA OF ANY DEBRIS ASSOCIATED WITH THE WORK BEING PERFORMED. THE SITE SHALL BE CLEAN OF ALL CONSTRUCTION DEBRIS AT THE COMPLETION OF THE JOB, BEFORE FINAL PAYMENT IS MADE.

14.REASONABLE PRECAUTIONS SHALL BE MADE FOR SAFETY AND HEALTH INCLUDING BUT NOT LIMITED TO WARNING SIGNS, SAFETY PRECAUTIONS, AND BARRICADES FOR PEDESTRIANS.

15.COORDINATE ALL DEMOLITION, CLEANING, AND CONSTRUCTION WORK. CONTRACTOR SHALL PROVIDE OWNER A FULL CONSTRUCTION SCHEDULE.

16.CONTRACTOR SHALL BE HELD TO PROVIDED SCHEDULE. THEY SHALL BE RESPONSIBLE FOR PROVIDING SUFFICIENT MANPOWER AND EQUIPMENT TO COMPLETE THE WORK IN THE TIME INDICATED.

17.THE CONTRACTOR IS RESPONSIBLE FOR THE PROTECTION AND SECURITY OF ALL EQUIPMENT AND MATERIALS. THE LOCATION OF STORAGE SHALL BE RESTRICTED SPECIFICALLY TO THE AREA ALLOTTED BY THE OWNER.

18.ALL ITEMS INSTALLED UNDER THE SCOPE OF THIS PROJECT SHALL BE NEW, CLEAN, AND FREE OF DEFECTS.

19.IF DRAWING CHANGES ARE NEEDED FOR INSPECTION DUE TO FIELD CHANGES MADE BY THE CONTRACTOR WITHOUT PRIOR APPROVAL OF THE ENGINEER AND AGREED UPON TERMS, THEN THE CONTRACTOR SHALL PAY HOURLY RATES TO THE ENGINEER OF RECORD FOR MAKING NECESSARY CHANGES.

20.SUPPORTS, HANGERS, WIRING, AND PIPING SHALL BE INSTALLED IN A NEAT FASHION AND IN AN ORDERLY APPEARANCE.

21.ALL ROOF EQUIPMENT SHALL BE SECURED TO STRUCTURE TO RESIST A 120 MPH WIND LOAD.

22.PROTECT THE ROOF FROM DAMAGE WHENEVER ANY WORK ON THE ROOF IS REQUIRED.

23.CONTRACTOR SHALL MAINTAIN THE INTEGRITY OF ALL PARTITIONS LABELED WITH A SPECIAL LISTING ON THE ARCHITECTURAL PLANS. THIS INCLUDES FIRE, SMOKE ACOUSTICAL AND OTHER UL WALL OR CEILING ASSEMBLIES.

24.STRUCTURAL PENETRATIONS INCLUDING BUT NOT LIMITED TO WALL, FLOOR, OR BEAM SHALL BE APPROVED BY THE STRUCTURAL ENGINEER. ALL BEAM SLEEVES AND REINFORCING APPROVED BY STRUCTURAL ENGINEER SHALL BE FURNISHED AND INSTALLED BY THE CONTRACTOR.

25.CONTRACTOR SHALL GUARANTEE THE WORK AND MATERIALS FOR PERIOD OF ONE YEAR FROM THE DATE OF FINAL ACCEPTANCE. THIS GUARANTEE SHALL BE IN ADDITION TO THE WARRANTIES PROVIDED BY THE MATERIAL SUPPLIES AND MANUFACTURERS.

26.VALUE ENGINEERING OR CHANGES TO PLANS MUST BE APPROVED BY THE ENGINEER OF RECORD AND RESUBMITTED THROUGH THE BUILDING DEPARTMENT PRIOR TO BEING INSTALLED.

MECHANICAL SHEET INDEX

SHEET NUMBER	SHEET NAME
M001	HVAC NOTES & LEGENDS
M101	HVAC FLOOR PLAN
M501	HVAC DETAILS
M502	HVAC DETAILS
M601	HVAC SCHEDULES

FSM Engineering
150 John Knox Road
Tallahassee, FL, 32303
p.850.222.5683
FL CA 28968

TRI-COUNTY ELECTRIC CO-OP

1506 S JEFFERSON ST
PERRY, FL 32348

CRA ARCHITECTS
Clemons, Rutherford & Associates Inc.
Architects
Planners
Interior Designers
Construction Managers
2027 Thomasville Road
Tallahassee, Florida 32308
(850) 385-6153
Fax (850) 386-8420
e-mail
cra@craarchitects.com
Website
www.craarchitects.com

The Drawings, Specifications and other documents prepared by Clemons, Rutherford & Associates, Inc. (CRA) for this Project are instruments of CRA for use solely with respect to this Project and, unless otherwise provided, CRA shall be deemed the author of these documents and shall retain all common law, statutory and other reserved rights, including the copyright. The Owner shall be permitted to retain copies, including reproducible copies, of CRA's Drawings, Specifications and other documents for information and reference in connection with the Owner's use and occupancy of this Project. CRA's Drawings, Specifications or other documents shall not be used by the Owner or others on other projects, for additions to this Project or for completion of this Project by others, unless the Architect is adjudged to be in default under this Agreement, except by agreement in writing and with appropriate compensation to CRA.

ROBERT E GELHARDT II LICENSEE No. 77568 STATE OF FLORIDA PROFESSIONAL ENGINEER

Robert E. Gelhardt II, PE#77568

Robert E. Gelhardt II 2025.02.20

SUBMITTAL

PHASE	DATE	DRAWN	CHECK
DD	07/25/24	LJ	REGII
50% CD	09/13/24	LJ	REGII
90% CD	10/04/24	LJ	REGII
100% CD	10/22/24	LJ	REGII
PERMIT	02/21/25	LJ	REGII

REVISIONS

#	DATE	COMMENTS
-		
-		
-		
-		
-		
-		

PROJ. NO. 24002

PHASE: PERMIT PLANS

SHEET TITLE

HVAC NOTES & LEGENDS

M001

Robert E. Gelhardt II, P.E., State of Florida, Professional Engineer, License No. FL 77568. This Item has been digitally signed and sealed by Robert E. Gelhardt II, P.E. on the date indicated here. Printed copies of this document are not considered signed and sealed and the signature must be verified on any electronic copies.

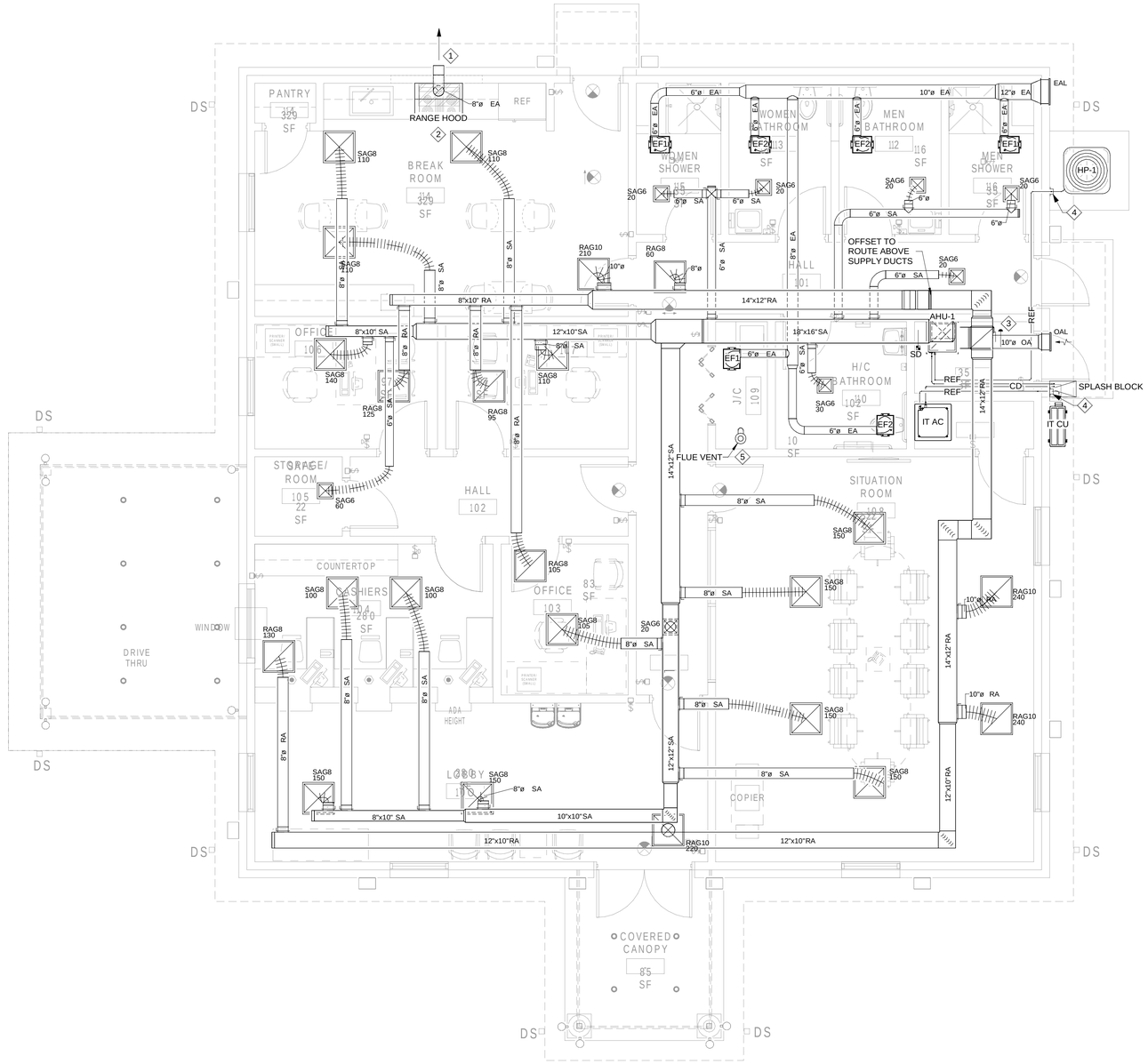

1 M101 **FLOOR PLAN - MECHANICAL**

Scale: 1/4" = 1'-0"

MECHANICAL GENERAL NOTES

1. CONTRACTOR SHALL ROUTE NEW DUCTS WITHIN CEILING SPACE
2. NEW DUCT WORK SHALL USE SHEET METAL DUCTS. NO DUCTBOARD.
3. CONTRACTOR SHALL PROVIDE ALL NEW GRILLES.
4. COORDINATE EXACT LOCATION OF GRILLES INTO THE CEILING ON SITE. OFFSETS TO GRILLES MORE THAN ONE ACT TILE NEEDS APPROVAL OF EOR OR ARCHITECT.
5. CONTRACTOR SHALL COORDINATE WITH TRUSS MANUFACTURER, OFFSET DUCTS IN ATTIC AS NEEDED.

MECHANICAL KEYED NOTES

X	
1	THROUGH WALL WITH MANUFACTURER PROVIDED WALL CAP TERMINATION AND INSECT SCREEN.
2	PROVIDE RESIDENTAIL STYLE RANGE HOOD WITH ANSUL FIRE PROTECTION SYSTEM.
3	INSTALL MOTORIZED DAMPER IN OA DUCT. MOTORIZED DAMPER SHALL BE AT MIN POSITION WHEN UNOCCUPIED AND OPEN (BALANCED TO VENTILATION RATE LISTED IN SCHEDULE) WHEN OCCUPIED.
4	INSTALL SHROUD OVER EXTERIOR REFRIGERANT PIPING AND SEAL AROUND THE CONNECTION TO THE BUILDING WITH SILICONE CAULKING TO MAKE AN AIR AND WATER TIGHTSEAL. THE EXPOSED EXTERIOR REFRIGERANT PIPING SHALL BE INSULATED AND COVERED WITH ALUMINUM JACKETING
5	FLUE VENT FOR GAS WATER HEATER, SEE DETAIL.

FSM Engineering
150 John Knox Road
Tallahassee, FL, 32303
p.850.222.5683
FL CA 28968

TRI-COUNTY ELECTRIC CO-OP

1506 S JEFFERSON ST
PERRY, FL 32348

CRA ARCHITECTS
Clemons, Rutherford & Associates Inc.
Architects
Planners
Interior Designers
Construction Managers
2027 Thomasville Road
Tallahassee, Florida 32308
(850) 385-6153
Fax (850) 386-8420
e-mail
cra@craarchitects.com
Website
www.craarchitects.com

The Drawings, Specifications and other documents prepared by Clemons, Rutherford & Associates, Inc. (CRA) for this Project are instruments of CRA for use solely with respect to this Project and, unless otherwise provided, CRA shall be deemed the author of these documents and shall retain all common law, statutory and other reserved rights, including the copyright. The Owner shall be permitted to retain copies, including reproducible copies, of CRA's Drawings, Specifications and other documents for information and reference in connection with the Owner's use and occupancy of the Project. CRA's Drawings, Specifications or other documents shall not be used by the Owner or others on other projects, for additions to this Project or for completion of this Project by others, unless the Architect is adjudged to be in default under this Agreement, except by agreement in writing and with appropriate compensation to CRA.

ROBERT E GELHARDT II LICENSEE 77568 STATE OF FLORIDA PROFESSIONAL ENGINEER

Robert E Gelhardt II 2025.02.20

Robert E. Gelhardt II, PE#77568

SUBMITTAL

PHASE	DATE	DRAWN	CHECK
DD	07/25/24	LJ	REGII
50% CD	09/13/24	LJ	REGII
90% CD	10/04/24	LJ	REGII
100% CD	10/22/24	LJ	REGII
PERMIT	02/21/25	LJ	REGII

REVISIONS

#	DATE	COMMENTS
-		
-		
-		
-		
-		
-		

PROJ. NO. 24002

PHASE: PERMIT PLANS

SHEET TITLE

HVAC FLOOR PLAN

M101

Robert E. Gelhardt II, P.E., State of Florida, Professional Engineer, License No. FL 77568. This Item has been digitally signed and sealed by Robert E. Gelhardt II, P.E. on the date indicated here. Printed copies of this document are not considered signed and sealed and the signature must be verified on any electronic copies.

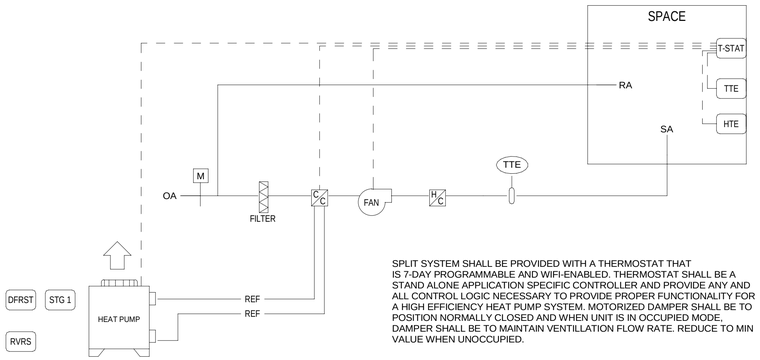

SPLIT SYSTEM SHALL BE PROVIDED WITH A THERMOSTAT THAT IS 7-DAY PROGRAMMABLE AND WIFI-ENABLED. THERMOSTAT SHALL BE A STAND ALONE APPLICATION SPECIFIC CONTROLLER AND PROVIDE ANY AND ALL CONTROL LOGIC NECESSARY TO PROVIDE PROPER FUNCTIONALITY FOR A HIGH EFFICIENCY HEAT PUMP SYSTEM. MOTORIZED DAMPER SHALL BE TO POSITION NORMALLY CLOSED AND WHEN UNIT IS IN OCCUPIED MODE, DAMPER SHALL BE TO MAINTAIN VENTILLATION FLOW RATE. REDUCE TO MIN VALUE WHEN UNOCCUPIED.

1 SPLIT SYSTEM HEAT PUMP UNIT CONTROLS
M501 SCALE: NTS

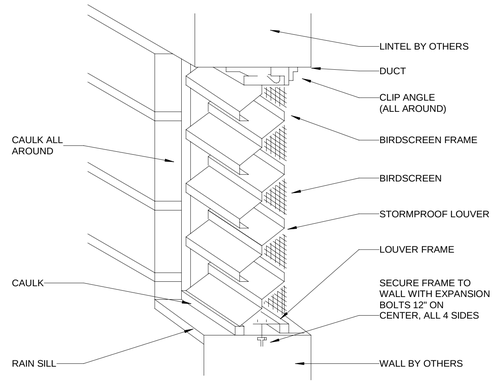

2 TYPICAL WALL LOUVER DETAIL
M501 SCALE: NTS

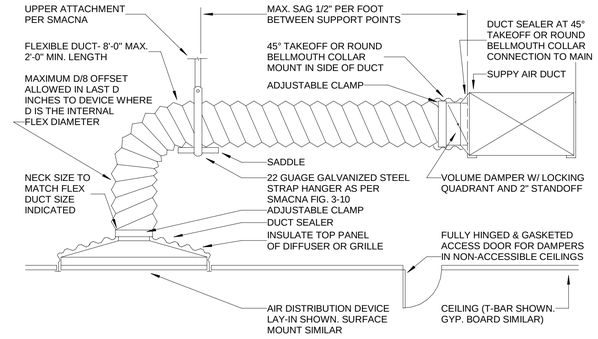

NOTES:

1. FLEXIBLE DUCTS SHALL BE IN ONE PIECE AND SHALL NOT BE SPLICED TOGETHER.
2. EXTEND FLEXIBLE DUCT INSULATION TO DUCT/DIFFUSER PANEL INSULATION AND SEAL WITH MASTIC.
3. FLEXIBLE AIR DUCT SHALL NOT EXCEED 8 FT. WHEN EXTENDED. ELBOW RADIUS SIZED FOR NO LESS THAN R/D = 1.0.
4. FLEXIBLE AIR DUCT SHALL NOT BE LESS THAN 5 FEET FOR ACOUSTICAL PURPOSES.

3 FLEXIBLE DUCT TAKEOFF DETAIL
M501 SCALE: NTS

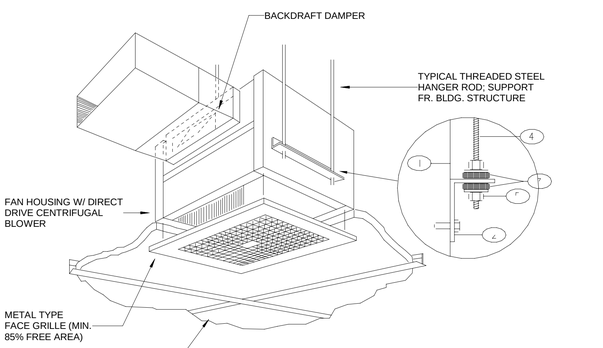

GENERAL NOTES:

• PROVIDE BACKDRAFT DAMPER AT FAN AND BIRD SCREEN AT OUTLET.
• PROVIDE INTERNAL ISOLATION AND SOUND INSULATION, AS NECESSARY.

1. GALVANIZED STEEL HOUSING
2. ADJUSTABLE MOUNTING FLANGE
3. VIBRATION ISOLATOR, TOP AND BOTTOM
4. 3/16" DIAMTER THREADED HANGER RODS, TOTAL OF FOUR, SUPPORT FROM BUILDING STRUCTURE. PROVIDE SECONDARY FRAMING AS NECESSARY
5. LOCKING NUT AND WASHER

4 EXHAUST FAN DETAIL
M501 SCALE: NTS

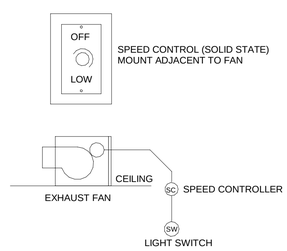

EXHAUST FAN - LIGHT SWITCH CONTROL

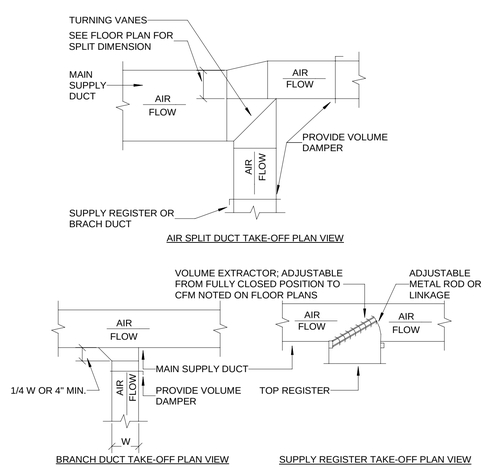

5 SUPPLY DUCTWORK TAKE-OFF DETAIL
M501 SCALE: NTS

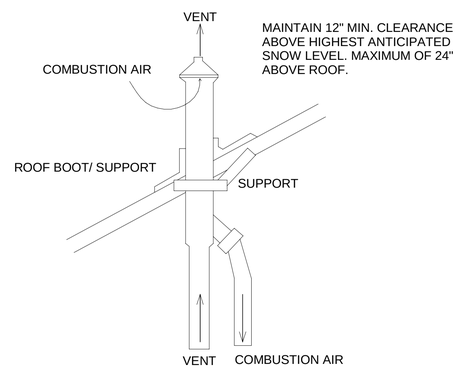

NOTE: SUPPORT MUST BE FIELD INSTALLED TO SECURE TERMINATION KIT TO STRUCTURE

6 CONCENTRIC FLUE VENT DETAIL
M501 SCALE: NTS

FSM Engineering
150 John Knox Road
Tallahassee, FL, 32303
p.850.222.5683
FL CA 28968

TRI-COUNTY
ELECTRIC CO-OP

1506 S JEFFERSON ST
PERRY, FL 32348

CRA ARCHITECTS
Clemons, Rutherford
& Associates Inc.
Architects
Planners
Interior Designers
Construction Managers
2027 Thomasville Road
Tallahassee, Florida 32308
(850) 385-6153
Fax (850) 386-8420
e-mail
cra@craarchitects.com
Website
www.craarchitects.com

The Drawings, Specifications and other documents prepared by Clemons, Rutherford & Associates, Inc. (CRA) for this Project are instruments of CRA for use solely with respect to this Project and, unless otherwise provided, CRA shall be deemed the author of these documents and shall retain all common law, statutory and other reserved rights, including the copyright. The Owner shall be permitted to retain copies, including reproducible copies, of CRA's Drawings, Specifications and other documents for information and reference in connection with the Owner's use and occupancy of the Project. CRA's Drawings, Specifications or other documents shall not be used by the Owner or others on other projects, for additions to this Project or for completion of this Project by others, unless the Architect is adjudged to be in default under this Agreement, except by agreement in writing and with appropriate compensation to CRA.

ROBERT E GELHARDT II
LICENSEE
STATE OF FLORIDA
PROFESSIONAL ENGINEER

Robert E Gelhardt II
2025.02.20

Robert E. Gelhardt II, PE#77568

SUBMITTAL

PHASE	DATE	DRAWN	CHECK
DD	07/25/24	LJ	REGII
50% CD	09/13/24	LJ	REGII
90% CD	10/04/24	LJ	REGII
100% CD	10/22/24	LJ	REGII
PERMIT	02/22/25	LJ	REGII

REVISIONS

#	DATE	COMMENTS
-		
-		
-		
-		
-		
-		

PROJ. NO. 24002

PHASE: PERMIT PLANS

SHEET TITLE

HVAC DETAILS

M501

Robert E. Gelhardt II, P.E., State of Florida, Professional Engineer, License No. FL 77568. This Item has been digitally signed and sealed by Robert E. Gelhardt II, P.E. on the date indicated here. Printed copies of this document are not considered signed and sealed and the signature must be verified on any electronic copies.

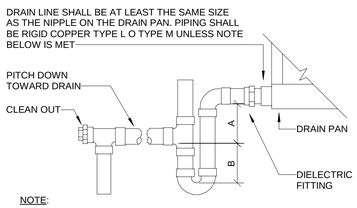

NOTE:

1.CPVC PIPE MAY BE USED ONLY IF APPROVED BY LOCAL VA AND IS INDOORS AND DOES NOT PASS THROUGH RATED BARRIERS.
2.DIELECTRIC FITTING TO BE USED WHEN TWO DISSIMILAR METALS ARE TO BE CONNECTED.
3.TERMINATE AT CODE ALLOWED GREEN SPACE INTO GRAVEL PIT MINIMUM 12" FROM BUILDING.

UNIT TYPE	A	B
DRAW THRU	2" PLUS X	X
BLOW THRU	1" MINIMUM	2X

WHERE X = STATIC PRESSURE IN PAN

1 AHU DRAIN TRAP

M502 SCALE: NTS

DUCT HANGER DETAILS

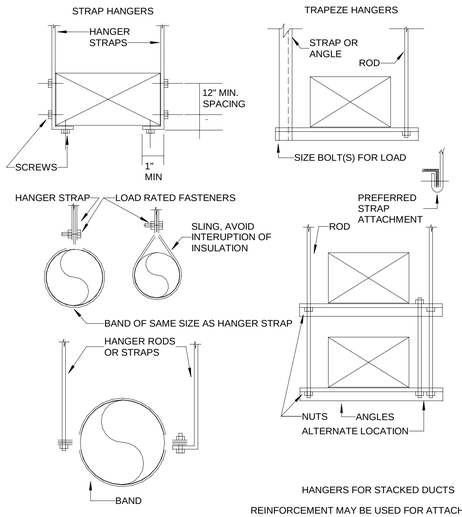

HANGERS FOR STACKED DUCTS

REINFORCEMENT MAY BE USED FOR ATTACHMENT IF IT QUALIFIES FOR BOTH DUCTS

DO NOT EXCEED LOAD RATING FOR METHOD USED.

2 HANGER DETAILS

M502 SCALE: NTS

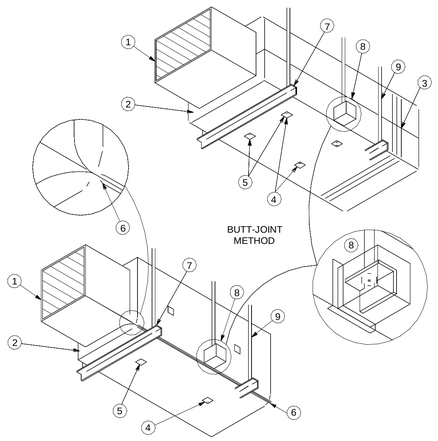

NOTES:

1 GALVANIZED METAL DUCT WITH SEALED SEAMS AND JOINTS USING PS-S POLY TYPE NO.P-301 PRODUCT.

2 BLANKET INSULATION WITH FACTORY-APPLIED VAPOR-RETARDER JACKET, 2" THICK R-6, 3/4 LB. CU. FT. DENSITY.

3 FACTORY LAP ALL SEALS (SEALED WITH ADHESIVE AND/OR STAPLES AND VAPOR-RETARDER TAPE). TAPE ALLOWS ALL JOINTS WITH FASON (SMANCA) ALUMINUM REINFORCED PRESSURE SENSITIVE TAPE; COAT EDGES, SEAMS, AND JOINTS WITH INSUL-COUSTIC PRODUCT BY "SURE-COAT M1-110" PRODUCT FIRE RESISTANT MASTIC.

4 MECHANICAL FASTENERS SUPPORTING INSULATION ON UNDERSIDE OF DUCTS OVER 24" WIDE (SPACE 3" MAXIMUM FROM THE BUTT JOINT).

5 VAPOR-RETARDER TAPE OVER TEARS AND PENETRATIONS OF THE VAPOR-RETARDER JACKET TO KEEP AIR TIGHT CONDITION.

6 ALTERNATE METHOD OF LAP SEAL - LONGITUDINAL JOINT LAPPED AND FOLDED, THEN STAPLED SECURELY IN PLACE.

7 HANGER ON EXTERIOR OF INSULATION. ENCAPSULATE EXPOSED END OF ANGLE. SEAL WITH ADHESIVE OR VAPOR-RETARDER TAPE.

8 HANGER EMBEDDED IN INSULATION. ENCAPSULATE EXPOSED END OF ANGLE. SEAL WITH ADHESIVE OR VAPOR RETARDER TAPE.

9 COMPLETELY ENCAPSULATE HANGER ROD AND ANGLE. SEAL TOP PENETRATION. ENCAPSULATE AND SEAL STRAP HANGERS IN A SIMILAR MANNER.

3 BLANKET FIBERGLASS INSULATION DETAIL

M502 SCALE: NTS

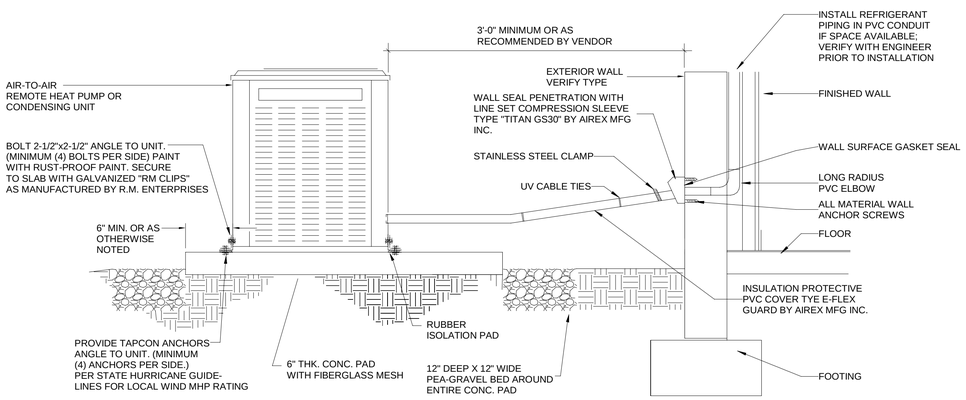

4 CONDENSING/HEAT PUMP UNIT OUTDOOR INSTALLATION DETAIL

M502 SCALE: NTS

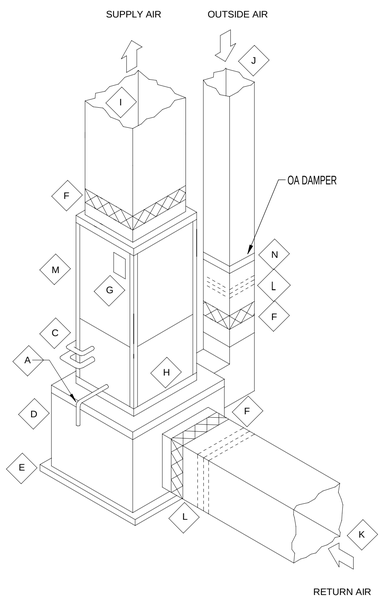

A. INSTALL CONDENSATE AS INDICATED IN DETAIL WITH INSULATED DRAIN & CLEANOUT; ROUTE TO EARTH AREA, STORM DRAIN, DRY-WELL, OR FLOOR DRAIN AS SO NOTED IN DRAWINGS.

B. NOT USED

C. ROUTE REFRIGERANT LINES TO MATCHING HP UNIT; SEE SPEC'S, DRAWINGS & PIPING SCHEMATIC FOR REQUIREMENTS.

D. AHU TO BE MOUNTED ON STEEL ANGLE STAND WITH SEALED METAL PLENUM BOX; BOX TO BE LINED WITH 1" ARMACELL AP-COILFLEX ELASTOMERIC CLOSED CELL FOAM WITH MICROBAN COATING.

E. MOUNT UNIT & PLENUM BOX ON NEOPRENE/CORK PAD COVERING ENTIRE BASE AS SHOWN; AHUS' SHALL HAVE AUX. DRAIN PANS UDNER SYSTEM WITH WATER DETECTION DEVICE & SECONDARY DRAIN PER CODE.

F. FLEXIBLE DUCT CONNECTOR.

G. UL APPROVED BREAKER OR DISCONNECT FOR FAN & HEATER IN COMPLIANCE WITH NEC CODE & LOCAL REQUIREMENTS.

H. 2" MERV 13 AIR FILTER & RACK; SEE SPEC'S FOR ADDITIONAL INFORMATION & REQUIREMENTS.

I. SUPPLY AIR DUCT WITH 1" ARMACELL AP-COILFLEX ELASTOMERIC CLOSED FOAM FIRST FIVE FET & EXTERNAL INSULATION

J. EXTERNAL INSULATED OUTSIDE AIR DUCT. SEE DRAWINGS FOR ADDITIONAL INFORMATION.

K. BUILDING RETURN AIR DUCT; DUCT TO BE INSULATED WITH EXTERIOR INSULATION.

L. OPPOSED BLADE BALANCING DAMPER.

M. AIR HANDLING UNIT; SEE SCHEDULES, SPEC'S & DRAWINGS FOR ADDITIONAL REQUIREMENTS.

N. MOTORIZED OUTSIDE AIR; ADJUST FOR OCCUPIED AND NON-OCCUPIED HOURS. REFER TO UNIT SCHEDULE AND FLOOR PLAN FOR VALUES.

5 UP FLOW VERTICAL AIR HANDLING UNIT WITH ATTACHED DUCT SYSTEM DETAIL

M502 SCALE: NTS

FSM Engineering
150 John Knox Road
Tallahassee, FL, 32303
p.850.222.5683
FL CA 28968

TRI-COUNTY ELECTRIC CO-OP

1506 S JEFFERSON ST
PERRY, FL 32348

CRA ARCHITECTS
Clemons, Rutherford & Associates Inc.
Architects
Planners
Interior Designers
Construction Managers
2027 Thomasville Road
Tallahassee, Florida 32308
(850) 385-6153
Fax (850) 386-8420
e-mail
cra@craarchitects.com
Website
www.craarchitects.com

The Drawings, Specifications and other documents prepared by Clemons, Rutherford & Associates, Inc. (CRA) for this Project are instruments of CRA for use solely with respect to this Project and, unless otherwise provided, CRA shall be deemed the author of these documents and shall retain all common law, statutory and other reserved rights, including the copyright. The Owner shall be permitted to retain copies, including reproducible copies, of CRA's Drawings, Specifications and other documents for information and reference in connection with the Owner's use and occupancy of the Project. CRA's Drawings, Specifications or other documents shall not be used by the Owner or others on other projects, for additions to this Project or for completion of this Project by others, unless the Architect is adjudged to be in default under this Agreement, except by agreement in writing and with appropriate compensation to CRA.

ROBERT E GELHARDT II LICENSE No. 77568 STATE OF FLORIDA PROFESSIONAL ENGINEER

Robert E Gelhardt II 2025.02.20

Robert E. Gelhardt II, PE#77568

SUBMITTAL

PHASE	DATE	DRAWN	CHECK
DD	07/25/24	LJ	REGII
50% CD	09/13/24	LJ	REGII
90% CD	10/04/24	LJ	REGII
100% CD	10/22/24	LJ	REGII
PERMIT	02/22/25	LJ	REGII

REVISIONS

#	DATE	COMMENTS
-		
-		
-		
-		
-		
-		

PROJ. NO. 24002

PHASE: PERMIT PLANS

SHEET TITLE

HVAC DETAILS

M502

Robert E. Gelhardt II, P.E., State of Florida, Professional Engineer, License No. FL 77568. This Item has been digitally signed and sealed by Robert E. Gelhardt II, P.E. on the date indicated here. Printed copies of this document are not considered signed and sealed and the signature must be verified on any electronic copies.

AIR HANDLER SCHEDULE

MARK	MANUFACTURER	MODEL	MATCHING UNIT	NOMINAL TON	TOTAL CFM	OA CFM	EXT. SP (IN WG)	MOTOR HP	EAT (DB/WB)	LAT (DB/WB)	VOLTAGE/ PHASE	AUX HEATER	MCA	MOCP	REMARKS
AHU-1	LENNOX	CBA38MV-060	HP-1	5	2000	400	0.50 in-wg	1	80 °F/67 °F	55 °F/54.9 °F	208 V/1	8000 W	45 A	45 A	1-4
IT AC	LG	LCN098HV4	IT CU	0.75	300	0	0.10 in-wg	0.2	75 °F/50 °F	55 °F/54.0 °F		0 W			2,5

REMARKS:
1. INSTALL WITH MERV13 FILTER, MANUFACTURER'S THERMOSTAT, MOTORIZED OUTSIDE AIR DAMPER, & DRAIN PAN OVERFLOW SWITCH.
2. PROVIDE SINGLE POINT POWER CONNECTION WITH INTEGRAL DISCONNECT.
3. UNOCCUPIED SETBACK AND OPTIMAL START SEQUENCES.
4. OA MOTORIZED DAMPER SHALL OPEN FULLY DURING OCCUPANCY HOURS AND SET TO MINIMUM VALUE OF 150CFM DURING NON-OCCUPANT HOURS.
5. SET TO COOLING ONLY MODE. INDOOR UNIT POWERED BY OUTDOOR UNIT.

OUTDOOR UNIT SCHEDULE

MARK	MODEL NUMBER	MATCHING UNIT	NOMINAL TON	TOTAL COOLING	SENSIBLE COOLING	TOTAL HEATING	SEER2	VOLTAGE/ PHASE	MCA	MOCP	REMARKS
HP-1	0EL18XPV-060	AHU-1	5	60000.0 Btu/h	48000.0 Btu/h	48000.0 Btu/h	17.1	208 V/1	35	60	1-3
IT CU	LUU097HV	IA AC	0.75	9000.0 Btu/h	7000.0 Btu/h	0.0 Btu/h	20.2	208 V/1	12	15	1,2

REMARKS:
1. SINGLE-POINT POWER, INTEGRAL DISCONNECT.
2. FOLLOW EQUIPMENT MANUFACTURER'S GUIDELINES FOR UNIT CLEARANCE AND REFRIGERANT LINE SIZING.
3. COMPRESSOR SOUND BLANKET, CRANKCASE HEATER. SECURED FOR LOCAL WIND RATING. SEER SHALL BE AT LEAST 16.8 FOR ECONOMIZER EXEMPTION.

AIR DISTRIBUTION DEVICE SCHEDULE

MARK	SERVICE	MFG	MODEL	CFM RANGE	NECK SIZE	FACE SIZE	DETAILS	IMAGE
RAG8	RETURN	PRICE	APDDR	0-150	8"ø	2' - 0"x2' - 0"	LAYIN OR SURFACE MOUNTED; ALUMINUM MATERIAL; PERFORATED FACE; DUCTED RETURN;	
RAG10	RETURN	PRICE	APDDR	150-275	10"ø	2' - 0"x2' - 0"	LAYIN OR SURFACE MOUNTED; ALUMINUM MATERIAL; PERFORATED FACE; DUCTED RETURN;	
SAG6	SUPPLY	PRICE	SCD	0-105	6"ø	1' - 0"x1' - 0"	4 WAY DIRECTIONAL; LAYIN OR SURFACE MOUNTED DIFFUSER; ALUMINUM MATERIAL.	
SAG8	SUPPLY	PRICE	SCD	80-160	8"ø	2' - 0"x2' - 0"	4 WAY DIRECTIONAL; LAYIN OR SURFACE MOUNTED DIFFUSER; ALUMINUM MATERIAL.	

LOUVER SCHEDULE

MARK	SERVICE	MANUFACTURER	MODEL	FACE SIZE	DETAILS
EAL18	EXHAUST	RUSKIN	EME3625MD	18"x12"	700 CFM EXHAUST. WIND DRIVEN RAIN RESISTANT. AMCA 550 AND AMCA 540 APPROVED. VERTICAL STATIONARY LOUVER. 3" LOUVER DEPTH. 0.37 FREE AREA SQFT. 1882 FREE AREA VEL FPM. 25% FREE AREA.
OAL12	INTAKE	RUSKIN	EME3625MD	12"x12"	400 CFM INTAKE. WIND DRIVEN RAIN RESISTANT. AMCA 550 AND AMCA 540 APPROVED. VERTICAL STATIONARY LOUVER. 3" LOUVER DEPTH. 0.22 FREE AREA SQFT. 1793 FREE AREA VELOCITY FPM. 22% FREE AREA.

EXHAUST FAN SCHEDULE

MARK	MANUFACTURER	MODEL	EXHAUST CFM	AREAS SERVED	DRIVE TYPE	MOTOR (W)	EXT. SP (IN WG)	SONES	UNIT WEIGHT	VOLTS/PHASE	REMARKS
EF1	LOREN COOK	GC-128	50	JANITORS/SHOWERS	DIRECT	27W	0.08 in-wg	1	15	115V/1	1
EF2	LOREN COOK	GC-148	75	RESTROOMS	DIRECT	45W	0.08 in-wg	1	15	115V/1	1

REMARKS:
1. TIE EXHAUST FAN CONTROL TO LIGHT SWITCH. PROVIDE FAN SPEED CONTROLLER AND BACKDRAFT DAMPER. INTERMITTENT USE.

GC 120 - 180

GC 200 - 700

SINGLE ZONE VENT SCHEDULE

SPACE NO. NAME	ZONE AREA (FT^2)	ZONE POP. (PEOPLE)	PEOPLE OA RATE (CFM/PPL)	AREA OA RATE (CFM/FT^2)	E_Z	UNOCCO. ZONE OA (CFM)	BREATHING ZONE OA (CFM)	ZONE OA (CFM)
100 LOBBY	273 SF	6	5	0.06 CFM/SF	0.8	20	46	58
101 CASHIERS	165 SF	3	8	0.06 CFM/SF	0.8	12	32	41
102 SITUATION ROOM	538 SF	10	5	0.06 CFM/SF	0.8	40	82	103
103A MENS RR	122 SF	0	0	0.00 CFM/SF	0.8	0	0	0
103B WOMENS RR	123 SF	0	0	0.00 CFM/SF	0.8	0	0	0
103C HALL	107 SF	0	0	0.06 CFM/SF	0.8	8	6	8
103D HALL	200 SF	0	0	0.06 CFM/SF	0.8	15	12	15
104 OFFICE	97 SF	1	5	0.06 CFM/SF	0.8	7	11	14
105 OFFICE	104 SF	1	5	0.06 CFM/SF	0.8	8	11	14
106 OFFICE	110 SF	1	5	0.06 CFM/SF	0.8	8	12	15
107 H/C BATHROOM	114 SF	0	0	0.00 CFM/SF	0.8	0	0	0
108 BREAK ROOM	343 SF	6	5	0.06 CFM/SF	0.8	26	51	63
110 IT	31 SF	0	0	0.06 CFM/SF	0.8	2	2	2
TOTAL	2327 SF	28				148	266	332

BUILDING PRESSURIZATION TABLE

MARK	TOTAL CFM	RA CFM	EA CFM	OA CFM	AIR BALANCE
AHU-1	2000	1600	0	400	400
EF1	0	0	50	0	-25
EF1	0	0	50	0	-25
EF1	0	0	50	0	-25
EF2	0	0	75	0	-50
EF2	0	0	75	0	-50
EF2	0	0	75	0	-50
IT AC	300	300	0	0	0
KEF	0	0	235	0	-100
TOTAL: 9	2300	1900	610	400	75

REMARKS:
1. THE EXHAUST FANS HAVE INTERMITTANT OPERATION, SO DIVERSITY OF EXHAUST RATES IS TAKEN INTO ACCOUNT IN THE AIR BALANCE ABOVE.

RESIDENTIAL RANGE HOOD

MARK	MAN.	MODEL	FIRE SUPPRESSION	CFM	LBS	HOOD DIMS (WxLxH)
RRH	GREENHECK	GRRS-W30TGDX	YES	235	90	23.5x30x12.5"

MANUFACTURER'S REQUIREMENTS			GAS DISCONNECT	HOOD ELEC		
TOP CONNECT	MIN DUCT SIZE	FAN CONNECT	OUTLET TYPE	VAC	BREAKER	FAN POWER
8"Ø	10"Ø	12"Ø	115VAC 5-15	115	15A	FROM HOOD

NOTES
1. THE SYSTEM SHALL BE CONFIGURED ACCORDING TO FBC-M505.1, WITH INDEPENDENT AIR-TIGHT SMOOTH SHEET METAL DUCTS AND A BACKDRAFT DAMPER.
2. THE SYSTEM SHALL HAVE AN EXHAUST OF 400CFM OR LESS, OR ELSE COMPLY WITH FBC-M505.2 MAKE-UP AIR REQUIREMENTS.
3. MANUAL PULL STATION, SOURCE CUT-OFF, INTEGRAL FIRE SUPPRESSION, ALARM, GREASE FILTER, AND INLINE FAN INCLUDED.
4. INSTALL WITH WALL CAP, SECURE FOR WIND RATING DENOTED ON THE PROJECT NOTES PAGE.
5. THIS SYSTEM SHALL NOT BE USED IN HEALTH OR INSTITUTIONAL FACILITIES WITHOUT RESELECTION.
6. THE RANGE HOOD SHALL BE INSTALLED 24-36" ABOVE THE COOKING SURFACE.

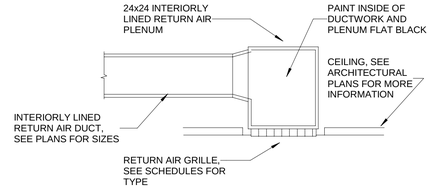

1 M601 RETURN AIR GRILLE CONNECTION DETAIL
SCALE: NTS

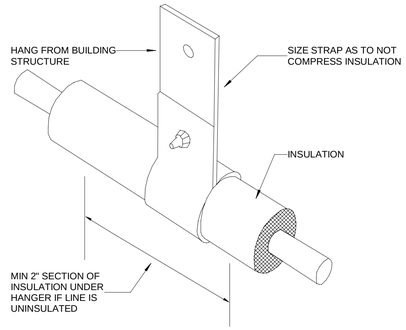

2 M601 REFRIGERANT PIPE HANGER DETAIL
SCALE: NTS

FSM Engineering
150 John Knox Road
Tallahassee, FL, 32303
p.850.222.5683
FL CA 28968

TRI-COUNTY ELECTRIC CO-OP

1506 S JEFFERSON ST
PERRY, FL 32348

CRA ARCHITECTS
Clemons, Rutherford & Associates Inc.
Architects
Planners
Interior Designers
Construction Managers
2027 Thomasville Road
Tallahassee, Florida 32308
(850) 385-6153
Fax (850) 386-8420
e-mail
cra@craarchitects.com
Website
www.craarchitects.com

The Drawings, Specifications and other documents prepared by Clemons, Rutherford & Associates, Inc. (CRA) for this Project are instruments of CRA for use solely with respect to this Project and, unless otherwise provided, CRA shall be deemed the author of these documents and shall retain all common law, statutory and other reserved rights, including the copyright. The Owner shall be permitted to retain copies, including reproducible copies, of CRA's Drawings, Specifications and other documents for information and reference in connection with the Owner's use and occupancy of the Project. CRA's Drawings, Specifications or other documents shall not be used by the Owner or others on other projects, for additions to this Project or for completion of this Project by others, unless the Architect is adjudged to be in default under this Agreement, except by agreement in writing and with appropriate compensation to CRA.

ROBERT E GELHARDT II LICENSEE STATE OF FLORIDA PROFESSIONAL ENGINEER

Robert E Gelhardt 2025.02.20

Robert E. Gelhardt II, PE#77568

SUBMITTAL

PHASE	DATE	DRAWN	CHECK
DD	07/25/24	LJ	REGII
50% CD	09/13/24	LJ	REGII
90% CD	10/04/24	LJ	REGII
100% CD	10/22/24	LJ	REGII
PERMIT	02/22/25	LJ	REGII

REVISIONS

#	DATE	COMMENTS
-		
-		
-		
-		
-		
-		

PROJ. NO. 24002

PHASE: PERMIT PLANS

SHEET TITLE

HVAC SCHEDULES

M601

Robert E. Gelhardt II, P.E., State of Florida, Professional Engineer, License No. FL 77568. This Item has been digitally signed and sealed by Robert E. Gelhardt II, P.E. on the date indicated here. Printed copies of this document are not considered signed and sealed and the signature must be verified on any electronic copies.